4–28–10 Wednesday
Vol. 75 No. 81 Apr. 28, 2010

Pages 22203–22496

Federal Register

The **FEDERAL REGISTER** (ISSN 0097–6326) is published daily, Monday through Friday, except official holidays, by the Office of the Federal Register, National Archives and Records Administration, Washington, DC 20408, under the Federal Register Act (44 U.S.C. Ch. 15) and the regulations of the Administrative Committee of the Federal Register (1 CFR Ch. I). The Superintendent of Documents, U.S. Government Printing Office, Washington, DC 20402 is the exclusive distributor of the official edition. Periodicals postage is paid at Washington, DC.

The **FEDERAL REGISTER** provides a uniform system for making available to the public regulations and legal notices issued by Federal agencies. These include Presidential proclamations and Executive Orders, Federal agency documents having general applicability and legal effect, documents required to be published by act of Congress, and other Federal agency documents of public interest.

Documents are on file for public inspection in the Office of the Federal Register the day before they are published, unless the issuing agency requests earlier filing. For a list of documents currently on file for public inspection, see *www.federalregister.gov.*

The seal of the National Archives and Records Administration authenticates the Federal Register as the official serial publication established under the Federal Register Act. Under 44 U.S.C. 1507, the contents of the **Federal Register** shall be judicially noticed.

The **Federal Register** is published in paper and on 24x microfiche. It is also available online at no charge as one of the databases on GPO Access, a service of the U.S. Government Printing Office.

The online edition of the **Federal Register***, www.gpoaccess.gov/nara,* available through GPO Access, is issued under the authority of the Administrative Committee of the Federal Register as the official legal equivalent of the paper and microfiche editions (44 U.S.C. 4101 and 1 CFR 5.10). It is updated by 6 a.m. each day the **Federal Register** is published and includes both text and graphics from Volume 59, Number 1 (January 2, 1994) forward.

For more information about GPO Access, contact the GPO Access User Support Team, call toll free 1-888-293-6498; DC area 202-512-1530; fax at 202-512-1262; or via e-mail at *gpoaccess@gpo.gov.* The Support Team is available between 7:00 a.m. and 9:00 p.m. Eastern Time, Monday–Friday, except official holidays.

The annual subscription price for the **Federal Register** paper edition is $749 plus postage, or $808, plus postage, for a combined **Federal Register, Federal Register** Index and List of CFR Sections Affected (LSA) subscription; the microfiche edition of the **Federal Register** including the **Federal Register** Index and LSA is $165, plus postage. Six month subscriptions are available for one-half the annual rate. The prevailing postal rates will be applied to orders according to the delivery method requested. The price of a single copy of the daily **Federal Register,** including postage, is based on the number of pages: $11 for an issue containing less than 200 pages; $22 for an issue containing 200 to 400 pages; and $33 for an issue containing more than 400 pages. Single issues of the microfiche edition may be purchased for $3 per copy, including postage. Remit check or money order, made payable to the Superintendent of Documents, or charge to your GPO Deposit Account, VISA, MasterCard, American Express, or Discover. Mail to: U.S. Government Printing Office—New Orders, P.O. Box 979050, St. Louis, MO 63197-9000; or call toll free 1-866-512-1800, DC area 202-512-1800; or go to the U.S. Government Online Bookstore site, see *bookstore.gpo.gov.*

There are no restrictions on the republication of material appearing in the **Federal Register.**

How To Cite This Publication: Use the volume number and the page number. Example: 75 FR 12345.

Postmaster: Send address changes to the Superintendent of Documents, Federal Register, U.S. Government Printing Office, Washington, DC 20402, along with the entire mailing label from the last issue received.

SUBSCRIPTIONS AND COPIES

PUBLIC	
Subscriptions:	
Paper or fiche	**202–512–1800**
Assistance with public subscriptions	**202–512–1806**
General online information	**202–512–1530; 1–888–293–6498**
Single copies/back copies:	
Paper or fiche	**202–512–1800**
Assistance with public single copies	**1–866–512–1800 (Toll-Free)**
FEDERAL AGENCIES	
Subscriptions:	
Paper or fiche	**202–741–6005**
Assistance with Federal agency subscriptions	**202–741–6005**

Printed on recycled paper.

Contents

Federal Register

Vol. 75, No. 81

Wednesday, April 28, 2010

Agricultural Marketing Service
RULES
Minimum Quality and Handling Standards for Domestic and Imported Peanuts Marketed in United States; Section 610 Review, 22213
Olives Grown in California; Increased Assessment Rate, 22211–22213
NOTICES
United States Standards for Grades of Olive Oil and Olive-Pomace Oil, 22363–22368

Agriculture Department
See Agricultural Marketing Service
See Animal and Plant Health Inspection Service
See Rural Business–Cooperative Service
NOTICES
Agency Information Collection Activities; Proposals, Submissions, and Approvals:
Innovations for Healthy Kids Challenge to Promote Open Government Initiative, 22357–22358

Air Force Department
NOTICES
Meetings:
US Air Force Academy Board of Visitors, 22392–22393

Animal and Plant Health Inspection Service
RULES
Importation of Papayas From Colombia and Ecuador, 22207–22211

Arts and Humanities, National Foundation
See National Foundation on the Arts and the Humanities

Centers for Disease Control and Prevention
NOTICES
Statement of Organization, Functions, and Delegations of Authority, 22413–22417

Coast Guard
RULES
Drawbridge Operation Regulations:
Upper Mississippi River, Rock Island, IL, 22228
Regulated Navigation Area:
Lake Champlain Bridge Construction Zone, NY and VT, 22228–22231
Safety Zones:
2010 Veterans Tribute Fireworks, Lake Charlevoix, Boyne City, MI, 22232–22234
Milwaukee Harbor, Milwaukee, WI, 22234
PROPOSED RULES
Anchorage Regulations:
Port of New York, 22323–22330
Safety Zones:
City of Chicagos July 4th Celebration Fireworks, Lake Michigan, Chicago, IL, 22330–22333
Michigan City Super Boat Grand Prix, Lake Michigan, Michigan City, IN, 22333–22335
North Jetty, Named the Barview Jetty, Tillamook Bay, OR, 22336–22338

Commerce Department
See International Trade Administration
See National Oceanic and Atmospheric Administration

Commodity Futures Trading Commission
NOTICES
Meetings; Sunshine Act, 22391

Consumer Product Safety Commission
PROPOSED RULES
Safety Standard for Bassinets and Cradles, 22303–22317
Safety Standard for Toddler Beds, 22291–22303

Corporation for National and Community Service
RULES
Implementation of OMB Guidance on Drug-Free Workplace Requirements, 22205–22207
NOTICES
Agency Information Collection Activities; Proposals, Submissions, and Approvals, 22391–22392

Defense Department
See Air Force Department

Education Department
NOTICES
Agency Information Collection Activities; Proposals, Submissions, and Approvals, 22393

Energy Department
See Federal Energy Regulatory Commission
RULES
Energy Conservation Program:
Test Procedures for General Service Fluorescent Lamps, Incandescent Reflector Lamps, etc.; Correction, 22213–22214

Environmental Protection Agency
RULES
Exemption from the Requirement of a Tolerance:
Phosphate Ester, Tallowamine, Ethoxylated, 22234–22240
Pesticide Tolerances:
Cyprodinil, 22240–22245
Cyromazine, 22252–22256
Difenoconazole, 22256–22263
Imidacloprid, 22245–22252
PROPOSED RULES
Lead Emissions from Piston-Engine Aircraft Using Leaded Aviation Gasoline, 22440–22468
National Emission Standards for Hazardous Air Pollutants:
Gold Mine Ore Processing and Production Area Source Category; and Addition to Source Category List for Standards, 22470–22496
NOTICES
Agency Information Collection Activities; Proposals, Submissions, and Approvals:
NSPS for Automobile and Light Duty Truck Surface Coating Operations (Renewal), 22399–22400
Clean Air Act Operating Permit Program:
Petition to Object to Title V Permit for Wheelabrator Baltimore, L.P., Baltimore City, MD, 22400
Draft Test Guidelines; Reopening of Comment Period, 22400
Meetings:
Exposure Modeling, 22401

Petition from Pesticide Poisoning Victims United; Availability, 22401–22402
Request to Voluntarily Cancel Pesticide Registrations:
Clofencet, 22404–22406
Methyl Parathion, 22402–22404
Transfer of Data:
Avaya Government Solutions, 22406–22407
Versar, Inc. and Syracuse Research Corp., 22407–22408

Executive Office of the President
See Presidential Documents
See Trade Representative, Office of United States

Federal Aviation Administration
RULES
Standard Instrument Approach Procedures, and Takeoff Minimums and Obstacle Departure Procedures; Miscellaneous Amendments, 22215–22219

Federal Communications Commission
RULES
Reexamination of Roaming Obligations of Commercial Mobile Radio Service Providers, 22263–22276
PROPOSED RULES
Aviation Service Rules, 22352–22356
Reexamination of Roaming Obligations of Commercial Mobile Radio Service Providers, 22338–22352

Federal Emergency Management Agency
RULES
Suspension of Community Eligibility; Correction, 22263
NOTICES
Major Disaster Declaration:
Massachusetts, 22417–22418

Federal Energy Regulatory Commission
NOTICES
Combined Notice of Filings, 22394–22399

Federal Maritime Commission
NOTICES
Agreements Filed, 22408
Ocean Transportation Intermediary License; Applicants, 22408–22409

Fish and Wildlife Service
NOTICES
Meetings:
Sport Fishing and Boating Partnership Council, 22423

Food and Drug Administration
NOTICES
Filing of Food Additive Petition:
Fonterra (USA) Inc., 22411
Public Conference:
Food and Drug Administration/Xavier University Global Outsourcing Conference, 22412–22413

Health and Human Services Department
See Centers for Disease Control and Prevention
See Food and Drug Administration
See National Institutes of Health
NOTICES
Decision to Evaluate a Petition to Designate a Class of Employees to be included in the Special Exposure Cohort:
Sandia National Laboratory, Albuquerque, NM, 22409
Designation of a Class of Employees for Addition to the Special Exposure Cohort, 22409–22410

Homeland Security Department
See Coast Guard
See Federal Emergency Management Agency
See U.S. Customs and Border Protection

Housing and Urban Development Department
NOTICES
Agency Information Collection Activities; Proposals, Submissions, and Approvals:
FHA TOTAL Mortgage Scorecard, 22418–22419

Indian Affairs Bureau
NOTICES
Liquor Control Ordinance of the Prairie Band Potawatomi Nation, 22419–22423

Interior Department
See Fish and Wildlife Service
See Indian Affairs Bureau
See Minerals Management Service
See Reclamation Bureau

Internal Revenue Service
NOTICES
Community Volunteer Income Tax Assistance Matching Grant; Availability of Application Packages, 22437
Meetings:
Art Advisory Panel, 22437
Tax Counseling for the Elderly Program; Availability of Application Packages, 22437–22438

International Trade Administration
NOTICES
Continuation of Antidumping Duty Orders:
Certain Preserved Mushrooms from Chile, India, Indonesia, and the People's Republic of China, 22369
Hand Trucks and Certain Parts from the People's Republic of China, 22369–22370
Court Decision Not in Harmony with Final Determinations and Amended Final Determinations of Antidumping Duty Investigations:
Certain Frozen Warmwater Shrimp from Brazil, Ecuador, India, People's Republic of China, Thailand, and Socialist Republic of Vietnam, 22370–22371
Extension of Time Limit for Preliminary Results of Antidumping Duty Administrative Review:
Floor-Standing, Metal Top Ironing Tables and Certain Parts Thereof from the People's Republic of China, 22371–22372
Preliminary Determination of Sales at Less Than Fair Value, etc.:
Certain Seamless Carbon and Alloy Steel Standard, Line, and Pressure Pipe from the People's Republic of China, 22372–22383
Preliminary Results of Antidumping Duty Administrative Reviews, Preliminary Results of Changed-Circumstances Review, etc.:
Ball Bearings and Parts Thereof from France, Germany, Italy, Japan, and the United Kingdom, 22384–22391

International Trade Commission
NOTICES
Investigations:
Frozen Warmwater Shrimp from Brazil, China, India, Thailand, and Vietnam, 22424

Labor Department
See Occupational Safety and Health Administration

Minerals Management Service
RULES
Update of Revised and Reaffirmed Documents Incorporated by Reference, 22219–22227

National Foundation on the Arts and the Humanities
NOTICES
Meetings:
Arts and Artifacts Indemnity Panel of the Federal Council Advisory Committee, 22431–22432

National Highway Traffic Safety Administration
PROPOSED RULES
Federal Motor Vehicle Safety Standards:
Small Business Impacts of Motor Vehicle Safety, 22317–22320

National Institutes of Health
NOTICES
Meetings:
Center for Scientific Review, 22411–22412
National Institute of Mental Health, 22411–22412
National Institute on Aging, 22411

National Oceanic and Atmospheric Administration
RULES
Endangered and Threatened Wildlife and Plants:
Threatened Status for the Puget Sound/Georgia Basin Distinct Population Segments of Yelloweye and Canary Rockfish, etc., 22276–22290
NOTICES
Agency Information Collection Activities; Proposals, Submissions, and Approvals:
Management and Oversight of National Estuarine Research Reserve System, 22368
Website Publication for the Climate Program Office, 22391

National Science Foundation
NOTICES
Meetings; Sunshine Act, 22432–22433
Permit Applications Received under the Antarctic Conservation Act (of 1978), 22433–22434

Nuclear Regulatory Commission
NOTICES
Receipt and Availability of Application for an Early Site Permit:
Exelon Nuclear Texas Holdings, LLC, 22434

Occupational Safety and Health Administration
NOTICES
Grant of Permanent Variance:
Avalotis Corp., 22424–22431

Occupational Safety and Health Review Commission
PROPOSED RULES
Regulations Implementing the Freedom of Information Act, 22320–22323

Office of United States Trade Representative
See Trade Representative, Office of United States

Postal Service
NOTICES
Meetings; Sunshine Act, 22434

Presidential Documents
ADMINISTRATIVE ORDERS
National Defense Authorization Act; Delegation of Functions (Memorandum of April 20, 2010), 22203

Reclamation Bureau
NOTICES
Pick–Sloan Missouri Basin Program, Eastern and Western Division Proposed Project Use Power Rate, 22423–22424

Rural Business–Cooperative Service
NOTICES
Funding Availability:
Small, Socially-Disadvantaged Producer Grant Program (Fiscal Year 2010), 22358–22363

Small Business Administration
NOTICES
Meetings:
Advisory Committee on Veterans Business Affairs, 22434–22435
Seeking Exemption Under Section 312 of Small Business Investment Act; Conflicts of Interest:
Pharos Capital Partners II, L.P., 22435

State Department
NOTICES
Meetings:
Shipping Coordinating Committee, 22435–22436

Surface Transportation Board
NOTICES
Control Exemption:
Michael Williams; St. Maries River Railroad, Inc., 22436

Trade Representative, Office of United States
NOTICES
List of Countries Denying Fair Market Opportunities for Government-Funded Airport Construction Projects, 22436

Transportation Department
See Federal Aviation Administration
See National Highway Traffic Safety Administration
See Surface Transportation Board

Treasury Department
See Internal Revenue Service
NOTICES
Agency Information Collection Activities; Proposals, Submissions, and Approvals, 22436–22437

U.S. Customs and Border Protection
NOTICES
Tuna-Tariff-Rate Quota:
Tariff-Rate Quota for Calendar Year 2010 Tuna Classifiable Under Harmonized Tariff Schedule of the United States, 22418

Veterans Affairs Department
NOTICES
Agency Information Collection Activities; Proposals, Submissions, and Approvals:
Health Resource Center Medical Center Payment Form, 22438

Separate Parts In This Issue

Part II
Environmental Protection Agency, 22440–22468

Part III
Environmental Protection Agency, 22470–22496

Reader Aids

Consult the Reader Aids section at the end of this page for phone numbers, online resources, finding aids, reminders, and notice of recently enacted public laws.

To subscribe to the Federal Register Table of Contents LISTSERV electronic mailing list, go to http://listserv.access.gpo.gov and select Online mailing list archives, FEDREGTOC-L, Join or leave the list (or change settings); then follow the instructions.

CFR PARTS AFFECTED IN THIS ISSUE

A cumulative list of the parts affected this month can be found in the Reader Aids section at the end of this issue.

2 CFR
2245.....22205

3 CFR
Administrative Orders:
Memorandums:
Memorandum of April 20, 2010.....22203

7 CFR
319.....22207
932.....22211
996.....22213

10 CFR
430.....22213

14 CFR
97 (2 documents).....22215, 22217

16 CFR
Proposed Rules:
1217.....22291
1218.....22303

23 CFR
Proposed Rules:
1200.....22317
1300.....22317

29 CFR
Proposed Rules:
2201.....22320

30 CFR
250.....22219

33 CFR
117.....22228
165 (3 documents).....22228, 22232, 22234
Proposed Rules:
110.....22323
165 (3 documents).....22330, 22333, 22336

40 CFR
180 (5 documents).....22240, 22245, 22252, 22256
Proposed Rules:
9.....22470
63.....22470
87.....22440

44 CFR
64.....22263

45 CFR
2545.....22205

47 CFR
20.....22263
Proposed Rules:
20.....22338
87.....22352

50 CFR
223.....22276
224.....22276

Federal Register
Vol. 75, No. 81
Wednesday, April 28, 2010

Presidential Documents

Title 3—

The President

Memorandum of April 20, 2010

Delegation of Certain Functions Under Section 1265 of the National Defense Authorization Act for Fiscal Year 2010

Memorandum for the Secretary of State

By the authority vested in me as President by the Constitution and the laws of the United States, including section 301 of title 3, United States Code, I hereby delegate to you the functions and authority conferred upon the President by section 1265 of the National Defense Authorization Act for Fiscal Year 2010, Public Law 111–84, to make the specified report to the Congress.

You are authorized and directed to notify the appropriate congressional committees and publish this memorandum in the *Federal Register*.

THE WHITE HOUSE,
Washington, April 20, 2010

[FR Doc. 2010–10037
Filed 4–27–10; 8:45 am]
Billing code 4710–10–P

Rules and Regulations

Federal Register
Vol. 75, No. 81
Wednesday, April 28, 2010

This section of the FEDERAL REGISTER contains regulatory documents having general applicability and legal effect, most of which are keyed to and codified in the Code of Federal Regulations, which is published under 50 titles pursuant to 44 U.S.C. 1510.

The Code of Federal Regulations is sold by the Superintendent of Documents. Prices of new books are listed in the first FEDERAL REGISTER issue of each week.

CORPORATION FOR NATIONAL AND COMMUNITY SERVICE

2 CFR Part 2245

45 CFR Part 2545

RIN 3045–AA53

Implementation of OMB Guidance on Drug-Free Workplace Requirements

AGENCY: Corporation for National and Community Service.

ACTION: Final rule.

SUMMARY: The Corporation for National and Community Service (CNCS or the Corporation) is removing its regulation implementing the Government-wide common rule on drug-free workplace requirements for financial assistance, currently located within part 2545 of title 45 of the Code of Federal Regulations (CFR), and issuing a new regulation to adopt the Office of Management and Budget (OMB) guidance at 2 CFR part 182. This regulatory action implements the OMB's initiative to streamline and consolidate into one title of the CFR all federal regulations on drug-free workplace requirements for financial assistance. These changes constitute an administrative simplification that would make no substantive change in the Corporation's policy or procedures for drug-free workplace.

DATES: This final rule is effective on June 28, 2010 without further action. Submit comments by May 28, 2010 on any unintended changes this action makes in the Corporation's policies and procedures for drug-free workplace. All comments on unintended changes will be considered and, if warranted, the Corporation will revise the rule.

ADDRESSES: You may submit comments, identified by the title of this rulemaking, by either of the following methods:

(1) Electronically through the Federal government's one-stop rulemaking Web site at *http://www.regulations.gov.*

(2) By mail sent to: Irshad Abdal-Haqq, Office of the General Counsel, Corporation for National and Community Service, 1201 New York Ave. NW., Room 10609, Washington, DC 20525

(3) By hand delivery or by courier to the Corporation's mailroom at Room 8100 using the name and mailing address in paragraph (2) above, between 9 a.m. and 4 p.m., Monday through Friday, except on Federal holidays.

FOR FURTHER INFORMATION CONTACT: Irshad Abdal-Haqq at 202–606–6675, or by e-mail at *iabdal-haqq@cns.gov.*

SUPPLEMENTARY INFORMATION:

Background

The Drug-Free Workplace Act of 1988 [Pub. L. 100–690, Title V, Subtitle D; 41 U.S.C. 701, *et seq.*] was enacted as a part of omnibus drug legislation on November 18, 1988. Federal agencies issued an interim final common rule to implement the act as it applied to grants [54 FR 4946, January 31, 1989]. The rule was a subpart of the Government-wide common rule on nonprocurement suspension and debarment. The agencies issued a final common rule after consideration of public comments [55 FR 21681, May 25, 1990].

The agencies proposed an update to the drug-free workplace common rule in 2002 [67 FR 3266, January 23, 2002] and finalized it in 2003 [68 FR 66534, November 26, 2003]. At that time, the updated common rule was redrafted in plain language and each agency relocated the drug-free workplace coverage to its own CFR part and removed it from the subpart in the suspension and debarment common rule. Based on an amendment to the drug-free workplace requirements in 41 U.S.C. 702 [Pub. L. 105–85, div. A, title VIII, Sec. 809, Nov. 18, 1997, 111 Stat. 1838], the update also allowed multiple enforcement options from which agencies could select, rather than requiring use of a certification in all cases.

When it established Title 2 of the CFR as the new central location for OMB guidance and agency implementing regulations concerning grants and agreements [69 FR 26276, May 11, 2004], OMB announced its intention to replace common rules with OMB guidance that agencies could adopt in brief regulations. OMB began that process by proposing [70 FR 51863, August 31, 2005] and finalizing [71 FR 66431, November 15, 2006] Government-wide guidance on nonprocurement suspension and debarment in 2 CFR part 180.

As the next step in that process, OMB proposed for comment [73 FR 55776, September 26, 2008] and finalized [74 FR 28149, June 15, 2009] Government-wide guidance with policies and procedures to implement drug-free workplace requirements for financial assistance. The guidance requires each agency to replace the common rule on drug-free workplace requirements that the agency previously issued in its own CFR title with a brief regulation in 2 CFR adopting the Government-wide policies and procedures. One advantage of this approach is that it reduces the total volume of drug-free workplace regulations. A second advantage is that it collocates OMB's guidance and all of the agencies' implementing regulations in 2 CFR.

The Current Regulatory Actions

As the OMB guidance requires, the Corporation is taking two regulatory actions. First, we are removing the drug-free workplace common rule from 45 CFR part 2545. Second, to replace the common rule, we are issuing a brief regulation in 2 CFR part 2245 to adopt the Government-wide policies and procedures in the OMB guidance.

Invitation To Comment

Taken together, these regulatory actions are solely an administrative simplification and are not intended to make any substantive change in policies or procedures. In soliciting comments on these actions, we therefore are not seeking to revisit substantive issues that were resolved during the development of the final common rule in 2003. We are inviting comments specifically on any unintended changes in substantive content that the new part in 2 CFR would make relative to the common rule at 45 CFR part 2545.

Administrative Procedure Act

Under the Administrative Procedure Act (5 U.S.C. 553), agencies generally propose a regulation and offer interested parties the opportunity to comment before it becomes effective. However, as described in the "Background" section

of this preamble, the policies and procedures in this regulation have been proposed for comment two times—one time by federal agencies as a common rule in 2002 and a second time by OMB as guidance in 2008—and adopted each time after resolution of the comments received.

This direct final rule is solely an administrative simplification that would make no substantive change in the Corporation policy or procedures for drug-free workplace. We therefore believe that the rule is noncontroversial and do not expect to receive adverse comments, although we are inviting comments on any unintended substantive change this rule makes.

Accordingly, we find that the solicitation of public comments on this direct final rule is unnecessary and that "good cause" exists under 5 U.S.C. 553(b)(B) and 553(d) to make this rule effective on June 28, 2010 without further action, unless we receive adverse comment by May 28, 2010. If any comment on unintended changes is received, it will be considered and, if warranted, we will publish a timely revision of the rule.

Executive Order 12866

OMB has determined this rule to be not significant for purposes of E.O. 12866.

Regulatory Flexibility Act of 1980 (5 U.S.C. 605(b))

This regulatory action will not have a significant adverse impact on a substantial number of small entities.

Unfunded Mandates Act of 1995 (Sec. 202, Pub. L. 104–4)

This regulatory action does not contain a Federal mandate that will result in the expenditure by State, local, and tribal governments, in aggregate, or by the private sector of $100 million or more in any one year.

Paperwork Reduction Act of 1995 (44 U.S.C., Chapter 35)

This regulatory action will not impose any additional reporting or recordkeeping requirements under the Paperwork Reduction Act.

Federalism (Executive Order 13132)

This regulatory action does not have Federalism implications, as set forth in Executive Order 13132. It will not have substantial direct effects on the States, on the relationship between the national government and the States, or on the distribution of power and responsibilities among the various levels of government.

List of Subjects

2 CFR Part 2245

Administrative practice and procedure, Drug abuse, Grant programs, Reporting and recordkeeping requirements.

45 CFR Part 2545

Administrative practice and procedure, Drug abuse, Grant programs, Reporting and recordkeeping requirements.

■ Accordingly, for the reasons set forth in the preamble, and under the authority of 5 U.S.C. 301 and 42 U.S.C. 12561c(c), the Corporation amends the Code of Federal Regulations, Title 2, subtitle B, chapter XXII, and Title 45, chapter XXV, part 2545, as follows:

Title 2—Grants and Agreements

■ 1. Add part 2245 in Subtitle B, Chapter XXII, to read as follows:

PART 2245—REQUIREMENTS FOR DRUG-FREE WORKPLACE (FINANCIAL ASSISTANCE)

Sec.

2245.10 What does this part do?
2245.20 Does this part apply to me?
2245.30 What policies and procedures must I follow?

Subpart A—[Reserved]

Subpart B—Requirements for Recipients Other Than Individuals

2245.225 Whom in the Corporation does a recipient other than an individual notify about a criminal drug conviction?

Subpart C—Requirements for Recipients Who Are Individuals

2245.300 Whom in the Corporation does a recipient who is an individual notify about a criminal drug conviction?

Subpart D—Responsibilities of Agency Awarding Officials

2245.400 What method do I use as an agency awarding official to obtain a recipient's agreement to comply with the OMB guidance?

Subpart E—Violations of this Part and Consequences

2245.500 Who in the Corporation determines that a recipient other than an individual violated the requirements of this part?
2245.505 Who in the Corporation determines that a recipient who is an individual violated the requirements of this part?

Subpart F—[Reserved]

Authority: 41 U.S.C. 701–707; 42 U.S.C. 12644.

§ 2245.10 What does this part do?

This part requires that the award and administration of the Corporation's grants and cooperative agreements comply with Office of Management and Budget (OMB) guidance implementing the portion of the Drug-Free Workplace Act of 1988 (41 U.S.C. 701–707, as amended, hereafter referred to as "the Act") that applies to grants. It thereby—

(a) Gives regulatory effect to the OMB guidance (Subparts A through F of 2 CFR part 182) for the Corporation's grants and cooperative agreements; and

(b) Establishes the Corporation's policies and procedures for compliance with the Act that are the same as those of other Federal agencies, in conformance with the requirement in 41 U.S.C. 705 for Government-wide implementing regulations.

§ 2245.20 Does this part apply to me?

This part and, through this part, pertinent portions of the OMB guidance in Subparts A through F of 2 CFR part 182 (see table at 2 CFR 182.115(b)) apply to you if you are a—

(a) Recipient of a Corporation grant or cooperative agreement; or

(b) A Corporation awarding official.

§ 2245.30 What policies and procedures must I follow?

(a) *General.* You must follow the policies and procedures specified in applicable sections of the OMB guidance in Subparts A through F of 2 CFR part 182, as implemented by this part.

(b) *Specific sections of OMB guidance that this part supplements.* In implementing the OMB guidance in 2 CFR part 182, this part supplements four sections of the guidance, as shown in the following table. For each of those sections, you must follow the policies and procedures in the OMB guidance, as supplemented by this part.

Section of OMB guidance	Section in this part where supplemented	What the supplementation clarifies
(1) 2 CFR 182.225(a)	§ 2245.225	Whom in the Corporation a recipient other than an individual must notify if an employee is convicted for a violation of a criminal drug statute in the workplace.

Section of OMB guidance	Section in this part where supplemented	What the supplementation clarifies
(2) 2 CFR 182.300(b)	§ 2245.300	Whom in the Corporation a recipient who is an individual must notify if he or she is convicted of a criminal drug offense resulting from a violation occurring during the conduct of any award activity.
(3) 2 CFR 182.500	§ 2245.500	Who in the Corporation is authorized to determine that a recipient other than an individual is in violation of the requirements of 2 CFR part 182, as implemented by this part.
(4) 2 CFR 182.505	§ 2245.505	Who in the Corporation is authorized to determine that a recipient who is an individual is in violation of the requirements of 2 CFR part 182, as implemented by this part.

(c) *Sections of the OMB guidance that this part does not supplement.* For any section of OMB guidance in Subparts A through F of 2 CFR part 182 that is not listed in paragraph (b) of this section, the Corporation's policies and procedures are the same as those in the OMB guidance.

Subpart A—Purpose and Coverage [Reserved]

Subpart B—Requirements for Recipients Other Than Individuals

§ 2245.225 Whom in the Corporation does a recipient other than an individual notify about a criminal drug conviction?

A recipient other than an individual that is required under 2 CFR 182.225(a) to notify Federal agencies about an employee's conviction for a criminal drug offense must notify the Corporation's awarding official or other designee.

Subpart C—Requirements for Recipients Who Are Individuals

§ 2245.300 Whom in the Corporation does a recipient who is an individual notify about a criminal drug conviction?

A recipient who is an individual and is required under 2 CFR 182.300(b) to notify Federal agencies about a conviction for a criminal drug offense must notify the Corporation's awarding official or other designee.

Subpart D—Responsibilities of Agency Awarding Officials

§ 2245.400 What method do I use as an Agency Awarding Official to obtain a recipient's agreement to comply with the OMB guidance?

To obtain a recipient's agreement to comply with applicable requirements in the OMB guidance at 2 CFR part 182, you must obtain each recipient's agreement, as a condition of the award, to comply with the requirements in subpart B (or subpart C, if the recipient is an individual) of 2245, which adopts the Government-wide implementation (2 CFR part 182) of sec. 5152–5158 of the Drug-Free Workplace Act of 1988 (Pub. L. 100–690, Title V, Subtitle D; 41 U.S.C. 701–707).

Subpart E—Violations of This Part and Consequences

§ 2245.500 Who in the Corporation determines that a recipient other than an individual violated the requirements of this part?

The Corporation's Chief Executive Officer or designee is authorized to make the determination under 2 CFR 182.500.

§ 2245.505 Who in the Corporation determines that a recipient who is an individual violated the requirements of this part?

The Corporation's Chief Executive Officer or designee is authorized to make the determination under 2 CFR 182.500.

Subpart F—[Reserved]

Title 45—Public Welfare

Chapter XXV—Corporation for National and Community Service

PART 2545—[REMOVED]

■ 2. Under the authority of 5 U.S.C. 301, and 42 U.S.C. 12651c(c), remove part 2545.

Dated: April 14, 2010.

Frank R. Trinity,

General Counsel.

[FR Doc. 2010–8989 Filed 4–27–10; 8:45 am]

BILLING CODE 6050–$$–P

DEPARTMENT OF AGRICULTURE

Animal and Plant Health Inspection Service

7 CFR Part 319

[Docket No. APHIS-2008-0050]

RIN 0579-AC95

Importation of Papayas From Colombia and Ecuador

AGENCY: Animal and Plant Health Inspection Service, USDA.

ACTION: Final rule.

SUMMARY: We are amending the fruits and vegetables regulations to allow, under certain conditions, the importation of commercial shipments of fresh papayas from Colombia and Ecuador into the continental United States. The conditions for the importation of papayas from Colombia and Ecuador include requirements for field sanitation, hot water treatment, and fruit fly trapping in papaya production areas. This action allows for the importation of papayas from Colombia and Ecuador while continuing to provide protection against the introduction of injurious plant pests into the continental United States.

DATES: *Effective Date:* May 28, 2010.

FOR FURTHER INFORMATION CONTACT: Ms. Dorothy C. Wayson, Regulatory Coordination Specialist, Regulatory Coordination and Compliance, PPQ, APHIS, 4700 River Road Unit 134, Riverdale, MD 20737-1231; (301) 734-0772.

SUPPLEMENTARY INFORMATION:

Background

Under the regulations in "Subpart-Fruits and Vegetables" (7 CFR 319.56 through 319.56-50, referred to below as the regulations), the Animal and Plant Health Inspection Service (APHIS) of the U.S. Department of Agriculture (USDA) prohibits or restricts the importation of fruits and vegetables into the United States from certain parts of the world to prevent plant pests from being introduced into and spread within the United States.

On April 21, 2009, we published in the **Federal Register** (74 FR 18161-18166, Docket No. APHIS-2008-0050) a proposal[1] to amend the regulations in § 319.56-25 to allow the importation of commercial consignments of fresh papayas from Colombia and Ecuador subject to a systems approach. Section 319.56-25 currently sets out conditions for the importation of papayas from Central America and Brazil; we

[1] To view the proposed rule and the comments we received, go to (*http://www.regulations.gov/fdmspublic/component/main?main=DocketDetail&d=APHIS-2008-0050*).

proposed to add Colombia and Ecuador to this systems approach. The proposed systems approach required that the papayas be produced and packed in approved areas of Colombia and Ecuador, that they be packed using packing procedures designed to exclude quarantine pests, and that fruit fly trapping, field sanitation, and hot water treatment be employed to remove pests of concern from the pathway.

We solicited comments concerning our proposal for 60 days ending June 22, 2009. We received six comments by that date. They were from State agricultural agencies, a domestic produce wholesaler, and Ecuador's Agency for Agricultural Product Quality Assurance. The comments are discussed below.

We proposed to require that the fields where papayas in Colombia and Ecuador are grown be kept free of papayas that are one-half or more ripe and that all culled and fallen fruits be buried, destroyed, or removed from the farm at least twice a week. One commenter stated that removing fallen fruit and fruit that is more than half ripe will be difficult and subject to interpretation, and therefore will increase pest infestation risks. The commenter asked how this practice will be carried out.

We disagree with the commenter's concerns about fruit removal. The national plant protection organizations (NPPOs) of Colombia and Ecuador will be responsible for ensuring that field sanitation, such as removing fallen and half ripe fruit is conducted. However, APHIS will conduct periodic reviews to ensure compliance with the regulations. The removal of fallen and half-ripe fruit is already a requirement for the importation of papayas from Central America and Brazil. To date, we have not received reports of any difficulties associated with this requirement.

One commenter asked if studies have been done to determine when papayas in Colombia and Ecuador are susceptible to fruit flies. The commenter also asked what fruit fly lures will be used.

Although research regarding when papayas are susceptible to fruit flies has not been conducted specifically for papayas from Colombia and Ecuador, the pest risk assessments (PRAs) that accompanied the proposed rule summarized the research on that topic that already exists and that was conducted for the currently approved program for importation of papayas from Central America and Brazil. Based on the findings of these PRAs, a risk management document (RMD) was drafted to identify measures to address the risks of the two fruit flies within Colombia and Ecuador, *Anastrepha fraterculus* (South American fruit fly) and *Ceratitis capitata* (Mediterranean fruit fly, or Medfly), and the fungal pest (*Phoma caricae-papayae*) within Ecuador, identified as quarantine pests in the PRAs. As stated in the RMD, papayas that are less than half ripe, or "green," are poor hosts for the two fruit flies.

Both Jackson and McPhail traps will be used for fruit fly trapping. Baits to be used will be specified APHIS-approved protein baits such as Nu-Lure or Torula yeast pellets.

In order to mitigate the potential pest risk posed by fruit flies laying eggs in papayas immediately before harvest, we proposed to, among other things, require the treatment of papayas with a hot water dip. The dip requires that papayas from Colombia and Ecuador be held for 20 minutes in hot water at 48 °C (118.4 °F).

One commenter expressed concern regarding this hot water dip treatment, stating that we removed the requirement for hot water treatment from the regulations in 7 CFR part 318 20 years ago in favor of vapor heat or forced air treatment. In addition, the commenter stated that field sanitation, trapping, and treatment with a hot water dip is not a probit 9 method of treating papaya for fruit flies. Therefore, the commenter stated that papayas should be prohibited from importation from Colombia and Ecuador and all other countries from which papaya are not treated with a probit 9 treatment.

The hot water dip treatment that the commenter referred to was used as the sole mitigation measure for papayas moved interstate from Hawaii to the mainland United States. The treatment, which we removed from the regulations in part 318 in 1991, consisted of immersion in water at a temperature of between 41 °C and 43 °C for a period of 40 minutes followed by a second immersion in water at a temperature of between 48 °C and 50 °C for a period of 20 minutes. The treatment failed due to a blossom end defect within the papayas that allowed mature fruit flies to enter the fruit rather than to a flaw in the treatment itself. The treatment was designed to treat fruit fly eggs and larvae near the surface of the fruit rather than fruit fly larvae within the seed cavity of the fruit where heat from the hot water treatment could not penetrate. We removed the treatment for Hawaii because we determined that we could not ensure that all papayas with the blossom end defect would be successfully culled at the packinghouse. Unlike the hot water dip that we used in Hawaii, the hot water dip we proposed for papayas from Colombia and Ecuador is part of a systems approach rather than a sole mitigation measure.

Probit 9 is a treatment standard that requires a pest mortality rate of greater than 99 percent. Although the hot water dip is not considered a probit 9 treatment, the systems approach we proposed uses methods in addition to treatment to mitigate the risk associated with fruit flies. These methods include removing papayas that are one-half or more ripe as well as culled or fallen papayas from fields where papayas are grown, allowing the exportation of only green papayas, and trapping for fruit flies at a rate of 1 trap per hectare with required mitigation measures or suspension of exports if fruit fly populations reach certain levels. As stated previously, the current systems approach has been used successfully to mitigate the risks associated with papayas from Central America and Brazil. To date, no interceptions of fruit flies have been found on papayas entering the United States from these countries.

Two commenters asked what regulatory oversight is in place to ensure that the elements of the systems approach will be followed. One of these commenters asked whether a site visit has been conducted and whether periodic reviews of the program will be carried out.

APHIS has conducted a site visit and will be conducting annual reviews to ensure compliance with the regulations. In addition, the NPPOs of Colombia and Ecuador are responsible for monitoring fruit fly traps on a weekly basis and maintaining records of such reviews, and supervising and directing compliance with the requirements of the rule.

One commenter stated that there is no objective means of assessing the risk associated with the importation of papayas from Colombia and Ecuador under the proposed systems approach or for the countries already approved to ship papayas under that systems approach.

We disagree with the commenter. As we noted above, the systems approach has been used in Central America and Brazil and no fruit flies have been intercepted on papayas imported from those regions. This real-world experience, along with our PRAs, our RMD, and our knowledge of the conditions in Colombia and Ecuador, provide an adequate basis for regulatory decisionmaking.

Under the current regulations in § 319.56-25(f), papayas from Central America and Brazil must be packed in

cartons stamped "Not for importation into or distribution in Hawaii" due to the presence in these areas of the papaya fruit fly (*Toxotrypana curvicauda*). This pest does not occur in Hawaii, where the majority of U.S. commercial papaya production takes place. However, in the proposed rule, we proposed to remove this box marking requirement for Central America and Brazil; we determined that our permitting process would allow us to effectively implement the distribution limitations. Likewise, we did not propose to require that boxes containing papayas from Colombia or Ecuador be marked.

One commenter stated that we should retain the requirement for marking all shipments of papaya from Central America and Brazil with a statement that they may not be imported into or distributed within Hawaii and that we should apply the requirement to shipments of papayas from Colombia and Ecuador, or the protection for Hawaii could be lost.

We disagree with the commenter. Currently, no papayas from foreign countries are allowed to enter into Hawaii. In addition, because papaya fruit fly occurs in Florida and other mainland papaya-producing areas, papayas from the continental United States are also prohibited from entering Hawaii, meaning that papayas from Colombia and Ecuador imported into the continental United States would not be allowed to be moved to Hawaii even if the papayas had entered domestic commerce. As stated in the proposed rule, our permitting process will allow us to effectively implement the distribution limitation, as it currently does for many other commodities that are not allowed to be imported into Hawaii. Therefore, we have determined that the box marking is not necessary.

We proposed to allow imports of papayas only from certain areas within Colombia and Ecuador, which we proposed to list in § 319.56-25(b). One commenter stated that, since the pest risk analysis for Ecuador analyzed the risk from papaya imports on a national level, there is no technical reason for the rule to refer to specific areas of production.

In the proposed rule, we stated that restricting imports of papayas to those produced in approved areas of Colombia and Ecuador would ensure that papayas intended for the continental United States are grown and packed in papaya production and packing areas of Colombia and Ecuador where fruit fly traps are maintained and where the other elements of the systems approach are in place. In addition, we stated that grower registration would allow for traceback and removal from the export program of production sites with confirmed pest problems, and the papaya orchards would be monitored by the NPPO to ensure that pest and disease-excluding sanitary procedures are employed.

Since the publication of the proposed rule, however, we have determined that, as long as the risk mitigation measures we proposed are adhered to, there is no technical reason to restrict the importation of commercial shipments of papaya to those produced in specific areas within Ecuador. Likewise, there is no technical reason to restrict the importation of commercial shipments of papaya to those produced in specific areas within Colombia. We are retaining the grower registration requirement for both countries, which will allow the foreign NPPOs and APHIS to monitor compliance with fruit fly trapping and the other elements of the systems approach. Therefore, we are removing the origin restrictions for these countries, as grower registration makes limiting imports to specific production areas unnecessary.

In § 319.56-25(b), we proposed to require that papayas from Colombia and Ecuador be grown by growers registered with the NPPO of the exporting country. One commenter asked why the proposed rule required that papaya growers in Colombia and Ecuador be registered with the NPPO of the exporting country when this is not required for papaya growers in other countries producing papayas for export to the United States under the same program.

Based upon our experience with pest exclusion programs and activities since the existing papaya program was put into place, we have determined it would be prudent and, indeed, necessary, to increase our focus on traceback capabilities. Therefore, we are requiring grower registration for all new fruit and vegetable imports, including the importation of papayas from Colombia and Ecuador. We did not have a policy requiring grower registration at the time the existing papaya program was put into place. However, the origin restrictions on papayas from Brazil and Central America function in the same manner as grower registration, allowing APHIS to monitor compliance with the regulations in approved growing areas in those countries.

We also proposed to allow only the "Solo" type of papayas to be imported into the United States from Colombia and Ecuador. One commenter stated that there is no reason to restrict papaya imports to the cultivar Solo as other cultivars are already available in the United States, and these cultivars are also produced within Ecuador.

The pest risk assessment only evaluated the risks associated with the importation of papayas weighing 2 kilograms or less, which are considered "Solo" papayas. The size limitation was put in place because the hot water dip treatment has not been tested on larger papayas. If Colombia or Ecuador desires to export other papaya varieties, they may propose to do so, and we will analyze the risks associated with the importation of such varieties.

One commenter expressed concern regarding the potential financial impact of the rule on U.S. papaya growers.

As explained in the proposed rule, we expect that papayas supplied by Colombia and Ecuador would largely compete against imports from Mexico and elsewhere. In addition, given that the U.S. market for fresh papaya is already dominated by imports, the addition of Colombia and Ecuador is unlikely to significantly affect sales by U.S. producers.

Therefore, for the reasons given in the proposed rule and in this document, we are adopting the proposed rule as a final rule, with the changes discussed in this document.

Executive Order 12866 and Regulatory Flexibility Act

This final rule has been determined to be not significant for the purposes of Executive Order 12866 and, therefore, has not been reviewed by the Office of Management and Budget.

We have prepared a Final Regulatory Flexibility analysis in accordance with Section 604 of the Regulatory Flexibility Act for this action. The analysis identifies papaya producers, importers, and wholesalers; fresh fruit and vegetable wholesalers; grocery stores; warehouse clubs and superstores; and fruit and vegetable markets as the small entities most likely to be affected by this action and considers the effects on domestic papaya production associated with the importation of papaya from Colombia and Ecuador. Based on the information presented in the analysis, the Administrator has certified that this action will not have a significant economic impact on a substantial number of small entities. The Final Regulatory Flexibility analysis may be viewed on the Regulations.gov Web site (see footnote 1 for instructions for accessing Regulations.gov). Copies of the Final Regulatory Flexibility analysis are also available from the person listed under **FOR FURTHER INFORMATION CONTACT**.

Executive Order 12988

This final rule allows fresh papayas to be imported into the continental United States from Colombia and Ecuador. State and local laws and regulations regarding papayas imported under this rule will be preempted while the fruit is in foreign commerce. Fresh fruits are generally imported for immediate distribution and sale to the consuming public, and remain in foreign commerce until sold to the ultimate consumer. The question of when foreign commerce ceases in other cases must be addressed on a case-by-case basis. No retroactive effect will be given to this rule, and this rule will not require administrative proceedings before parties may file suit in court challenging this rule.

Paperwork Reduction Act

In accordance with the Paperwork Reduction Act of 1995 (44 U.S.C. 3501 *et seq.*), the information collection or recordkeeping requirements included in this rule have been approved by the Office of Management and Budget (OMB) under OMB control number 0579-0358.

E-Government Act Compliance

The Animal and Plant Health Inspection Service is committed to compliance with the E-Government Act to promote the use of the Internet and other information technologies, to provide increased opportunities for citizen access to Government information and services, and for other purposes. For information pertinent to E-Government Act compliance related to this rule, please contact Mrs. Celeste Sickles, APHIS' Information Collection Coordinator, at (301) 851-2908.

List of Subjects in 7 CFR Part 319

Coffee, Cotton, Fruits, Imports, Logs, Nursery stock, Plant diseases and pests, Quarantine, Reporting and recordkeeping requirements, Rice, Vegetables.

■ Accordingly, we are amending 7 CFR part 319 as follows:

PART 319—FOREIGN QUARANTINE NOTICES

■ 1. The authority citation for part 319 continues to read as follows:

Authority: 7 U.S.C. 450, 7701-7772, and 7781-7786; 21 U.S.C. 136 and 136a; 7 CFR 2.22, 2.80, and 371.3.

■ 2. Section 319.56-25 is revised to read as follows:

§ 319.56-25 Papayas from Central America and South America.

Commercial consignments of the Solo type of papaya may be imported into the United States only in accordance with this section and all other applicable provisions of this subpart.

(a) The papayas were grown and packed for shipment to the continental United States (including Alaska), Puerto Rico, and the U.S. Virgin Islands in one of the following locations:

(1) *Brazil:* State of Espirito Santo; all areas in the State of Bahia that are between the Jequitinhonha River and the border with the State of Espirito Santo and all areas in the State of Rio Grande del Norte that contain the following municipalities: Touros, Pureza, Rio do Fogo, Barra de Maxaranguape, Taipu, Ceara Mirim, Extremoz, Ielmon Marinho, Sao Goncalo do Amarante, Natal, Maciaba, Parnamirim, Veracruz, Sao Jose de Mipibu, Nizia Floresta, Monte Aletre, Areas, Senador Georgino Avelino, Espirito Santo, Goianinha, Tibau do Sul, Vila Flor, and Canguaretama e Baia Formosa.

(2) *Costa Rica:* Provinces of Guanacaste, Puntarenas, San Jose.

(3) *El Salvador:* Departments of La Libertad, La Paz, and San Vicente.

(4) *Guatemala:* Departments of Escuintla, Retalhuleu, Santa Rosa, and Suchitepéquez.

(5) *Honduras:* Departments of Comayagua, Cortés, and Santa Bárbara.

(6) *Nicaragua:* Departments of Carazo, Granada, Leon, Managua, Masaya, and Rivas.

(7) *Panama:* Provinces of Cocle, Herrera, and Los Santos; Districts of Aleanje, David, and Dolega in the Province of Chiriqui; and all areas in the Province of Panama that are west of the Panama Canal; or

(b) The papayas were grown by a grower registered with the national plant protection organization (NPPO) of the exporting country and packed for shipment to the continental United States (including Alaska) in Colombia or Ecuador.

(c) Beginning at least 30 days before harvest began and continuing through the completion of harvest, all trees in the field where the papayas were grown were kept free of papayas that were one-half or more ripe (more than one-fourth of the shell surface yellow), and all culled and fallen fruits were buried, destroyed, or removed from the farm at least twice a week.

(d) The papayas were held for 20 minutes in hot water at 48 °C (118.4 °F).

(e) When packed, the papayas were less than one-half ripe (the shell surface was no more than one-fourth yellow, surrounded by light green), and appeared to be free of all injurious insect pests.

(f) The papayas were safeguarded from exposure to fruit flies from harvest to export, including being packaged so as to prevent access by fruit flies and other injurious insect pests. The package containing the papayas does not contain any other fruit, including papayas not qualified for importation into the United States.

(g) Beginning at least 1 year before harvest begins and continuing through the completion of harvest, fruit fly traps were maintained in the field where the papayas were grown. The traps were placed at a rate of 1 trap per hectare and were checked for fruit flies at least once weekly by plant health officials of the NPPO. Fifty percent of the traps were of the McPhail type and 50 percent of the traps were of the Jackson type. The NPPO kept records of fruit fly finds for each trap, updated the records each time the traps were checked, and made the records available to APHIS inspectors upon request. The records were maintained for at least 1 year.

(1) If the average Jackson fruit fly trap catch was greater than seven Mediterranean fruit flies (*Ceratitis capitata*) (Medfly) per trap per week, measures were taken to control the Medfly population in the production area. If the average Jackson fruit fly trap catch exceeds 14 Medflies per trap per week, importations of papayas from that production area must be halted until the rate of capture drops to an average of 7 or fewer Medflies per trap per week.

(2) In Colombia, Ecuador, or the State of Espirito Santo, Brazil, if the average McPhail trap catch was greater than seven South American fruit flies (*Anastrepha fraterculus*) per trap per week, measures were taken to control the South American fruit fly population in the production area. If the average McPhail fruit fly trap catch exceeds 14 South American fruit flies per trap per week, importations of papayas from that production area must be halted until the rate of capture drops to an average of 7 or fewer South American fruit flies per trap per week.

(h) All activities described in paragraphs (a) through (h) of this section were carried out under the supervision and direction of plant health officials of the NPPO.

(i) All consignments must be accompanied by a phytosanitary certificate issued by the NPPO of the exporting country stating that the papayas were grown, packed, and shipped in accordance with the provisions of this section.

(Approved by the Office of Management and Budget under control numbers 0579-0128 and 0579-0358)

Done in Washington, DC, this 31st day of March 2010.

Gregory Parham

Acting Administrator, Animal and Plant Health Inspection Service.

[FR Doc. 2010–9779 Filed 4–27–10: 8:45 am]

BILLING CODE 3410–34–S

DEPARTMENT OF AGRICULTURE

Agricultural Marketing Service

7 CFR Part 932

[Doc. No. AMS–FV–09–0089; FV10–932–1 FR]

Olives Grown in California; Increased Assessment Rate

AGENCY: Agricultural Marketing Service, USDA.

ACTION: Final rule.

SUMMARY: This rule increases the assessment rate established for the California Olive Committee (Committee) for the 2010 and subsequent fiscal years from $28.63 to $44.72 per assessable ton of olives handled. The Committee locally administers the marketing order, which regulates the handling of olives grown in California. Assessments upon olive handlers are used by the Committee to fund reasonable and necessary expenses of the program. The fiscal year began January 1 and ends December 31. The assessment rate will remain in effect indefinitely unless modified, suspended, or terminated.

DATES: *Effective Date:* April 29, 2010.

FOR FURTHER INFORMATION CONTACT: Jeffrey S. Smutny, Marketing Specialist, or Kurt J. Kimmel, Regional Manager, California Marketing Field Office, Marketing Order Administration Branch, Fruit and Vegetable Programs, AMS, USDA; Telephone: (559) 487–5901, Fax: (559) 487–5906; or E-mail: *Jeffrey.Smutny@ams.usda.gov* or *Kurt.Kimmel@ams.usda.gov*.

Small businesses may request information on complying with this regulation by contacting Antoinette Carter, Marketing Order Administration Branch, Fruit and Vegetable Programs, AMS, USDA, 1400 Independence Avenue, SW., STOP 0237, Washington, DC 20250–0237; Telephone: (202) 720–2491, Fax: (202) 720–8938, or E-mail: *Antoinette.Carter@ams.usda.gov.*

SUPPLEMENTARY INFORMATION: This rule is issued under Marketing Agreement No. 148 and Order No. 932, both as amended (7 CFR part 932), regulating the handling of olives grown in California, hereinafter referred to as the "order." The order is effective under the Agricultural Marketing Agreement Act of 1937, as amended (7 U.S.C. 601–674), hereinafter referred to as the "Act."

The Department of Agriculture (USDA) is issuing this rule in conformance with Executive Order 12866.

This rule has been reviewed under Executive Order 12988, Civil Justice Reform. Under the marketing order now in effect, California olive handlers are subject to assessments. Funds to administer the order are derived from such assessments. It is intended that the assessment rate as issued herein will be applicable to all assessable olives beginning on January 1, 2010, and continue until amended, suspended, or terminated.

The Act provides that administrative proceedings must be exhausted before parties may file suit in court. Under section 608c(15)(A) of the Act, any handler subject to an order may file with USDA a petition stating that the order, any provision of the order, or any obligation imposed in connection with the order is not in accordance with law and request a modification of the order or to be exempted therefrom. Such handler is afforded the opportunity for a hearing on the petition. After the hearing, USDA would rule on the petition. The Act provides that the district court of the United States in any district in which the handler is an inhabitant, or has his or her principal place of business, has jurisdiction to review USDA's ruling on the petition, provided an action is filed not later than 20 days after the date of the entry of the ruling.

This rule increases the assessment rate established for the Committee for the 2010 and subsequent fiscal years from $28.63 to $44.72 per ton of olives handled.

The California olive marketing order provides authority for the Committee, with the approval of USDA, to formulate an annual budget of expenses and collect assessments from handlers to administer the program. The members of the Committee are producers and handlers of California olives. They are familiar with the Committee's needs and with costs for goods and services in their local area and are thus in a position to formulate an appropriate budget and assessment rate. The assessment rate is formulated and discussed in a public meeting. Thus, all directly affected persons have an opportunity to participate and provide input.

For the 2009 and subsequent fiscal years, the Committee recommended, and USDA approved, an assessment rate that would continue in effect from fiscal year to fiscal year unless modified, suspended, or terminated by USDA upon recommendation and information submitted by the Committee or other information available to USDA.

The Committee met on December 15, 2009, and unanimously recommended 2010 fiscal year expenditures of $929,923 and an assessment rate of $44.72 per ton of olives. In comparison, last year's budgeted expenditures were $1,482,349. The assessment rate of $44.72 is $16.09 higher than the rate currently in effect. The Committee recommended the higher assessment rate because the 2009–10 assessable olive receipts as reported by the California Agricultural Statistics Service (CASS) are only 22,150 tons, which compares to 49,067 tons in 2008–09. Unusual weather conditions, including untimely temperatures that fell below freezing, contributed to a substantially smaller crop. The Committee also plans to use available reserve funds to help meet its 2010 expenses.

The major expenditures recommended by the Committee for the 2010 fiscal year include $300,000 for research, $255,000 for marketing activities, and $324,923 for administration. Budgeted expenses for these items in 2009 were $495,000, $627,800, and $359,549, respectively.

The assessment rate recommended by the Committee was derived by considering anticipated fiscal year expenses, actual olive tonnage received by handlers during the 2009–10 crop year, and additional pertinent factors. Actual assessable tonnage for the 2010 fiscal year is expected to be lower than the 2009–10 crop receipts of 22,150 tons reported by the CASS because some olives may be diverted by handlers to uses that are exempt from marketing order requirements. Income derived from handler assessments, along with interest income and funds from the Committee's authorized reserve, should be adequate to cover budgeted expenses. Funds in the reserve will be kept within the maximum permitted by the order of approximately one fiscal year's expenses (§ 932.40).

The assessment rate established in this rule will continue in effect indefinitely unless modified, suspended, or terminated by USDA upon recommendation and information submitted by the Committee or other available information.

Although this assessment rate will be in effect for an indefinite period, the Committee will continue to meet prior to or during each fiscal year to recommend a budget of expenses and consider recommendations for modification of the assessment rate. The

dates and times of Committee meetings are available from the Committee or USDA. Committee meetings are open to the public and interested persons may express their views at these meetings. USDA will evaluate Committee recommendations and other available information to determine whether modification of the assessment rate is needed. Further rulemaking will be undertaken as necessary. The Committee's 2010 budget and those for subsequent fiscal years would be reviewed and, as appropriate, approved by USDA.

Final Regulatory Flexibility Analysis

Pursuant to requirements set forth in the Regulatory Flexibility Act (RFA) (5 U.S.C. 601–602), the Agricultural Marketing Service (AMS) has considered the economic impact of this rule on small entities. Accordingly, AMS has prepared this final regulatory flexibility analysis.

The purpose of the RFA is to fit regulatory actions to the scale of business subject to such actions in order that small businesses will not be unduly or disproportionately burdened. Marketing orders issued pursuant to the Act, and the rules issued thereunder, are unique in that they are brought about through group action of essentially small entities acting on their own behalf.

There are approximately 1,000 producers of olives in the production area and 2 handlers subject to regulation under the marketing order. Small agricultural producers are defined by the Small Business Administration (13 CFR 121.201) as those having annual receipts less than $750,000, and small agricultural service firms are defined as those whose annual receipts are less than $7,000,000.

Based upon information from the Committee, the majority of olive producers may be classified as small entities. Both of the handlers may be classified as large entities.

This rule increases the assessment rate established for the Committee and collected from handlers for the 2010 and subsequent fiscal years from $28.63 to $44.72 per ton of assessable olives. The Committee unanimously recommended 2010 expenditures of $929,923 and an assessment rate of $44.72 per ton. The assessment rate of $44.72 is $16.09 higher than the 2009 rate. The higher assessment rate is necessary because assessable olive receipts for the 2009–10 crop year were reported by the CASS to be 22,150 tons, compared to 49,067 tons for the 2008–09 crop year. Actual assessable tonnage for the 2010 fiscal year is expected to be lower because some of the receipts may be diverted by handlers to exempt outlets on which assessments are not paid.

Income generated from the $44.72 per ton assessment rate should be adequate to meet this year's expenses when combined with funds from the authorized reserve and interest income. Funds in the reserve should be kept within the maximum permitted by the order of about one fiscal year's expenses (§ 932.40).

The major expenditures recommended by the Committee for the 2010 fiscal year include $300,000 for research, $255,000 for marketing activities, and $324,923 for administration. Budgeted expenses for these items in 2009 were $495,000, $627,800, and $359,549 respectively. The Committee recommended decreases in all major expense categories due to the huge decrease in assessable crop volume as reported by the CASS.

Prior to arriving at this budget, the Committee considered information from various sources, such as the Committee's Executive, Market Development, and Research Subcommittees. Alternate spending levels were discussed by these groups, based upon the relative value of various research and marketing projects to the olive industry and the reduced olive production. The assessment rate of $44.72 per ton of assessable olives was derived by considering anticipated expenses, the volume of assessable olives, and additional pertinent factors.

A review of historical information and preliminary information pertaining to the upcoming fiscal year indicates that the grower price for the 2009–10 crop year was approximately $1,193.94 per ton for canning fruit and $375.01 per ton for limited-use sizes, leaving the balance as unusable cull fruit. Approximately 91 percent of a ton of olives are canning fruit sizes and 5 percent are limited use sizes, leaving the balance as unusable cull fruit. Grower revenue on 22,150 total tons of canning and limited-use sizes would be $24,321,145 given the current grower prices for those sizes. Therefore, with an assessment rate increased from $28.63 to $44.72, the estimated assessment revenue is expected to be approximately 4 percent of grower revenue.

This action increases the assessment obligation imposed on handlers. While assessments impose some additional costs on handlers, the costs are minimal and uniform on all handlers. Some of the additional costs may be passed on to producers. However, these costs are offset by the benefits derived by the operation of the marketing order. In addition, the Committee's meeting was widely publicized throughout the California olive industry and all interested persons were invited to attend the meeting and participate in Committee deliberations on all issues. Like all Committee meetings, the December 15, 2009, meeting was a public meeting and all entities, both large and small, were able to express views on this issue.

This rule imposes no additional reporting or recordkeeping requirements on either small or large California olive handlers. As with all Federal marketing order programs, reports and forms are periodically reviewed to reduce information requirements and duplication by industry and public sector agencies. As noted in the initial regulatory flexibility analysis, USDA has not identified any relevant Federal rules that duplicate, overlap, or conflict with this final rule.

AMS is committed to complying with the E-Government Act, to promote the use of the Internet and other information technologies to provide increased opportunities for citizen access to Government information and services, and for other purposes.

A proposed rule concerning this action was published in the **Federal Register** on March 3, 2010 (75 FR 9536). Copies of the proposed rule were also mailed or sent via facsimile to all California olive handlers. Finally, the proposal was made available through the Internet by USDA and the Office of **Federal Register**. A 30-day comment period ending April 2, 2010, was provided for interested persons to respond to the proposal. No comments were received.

A small business guide on complying with fruit, vegetable, and specialty crop marketing agreements and orders may be viewed at: *http://www.ams.usda.gov/AMSv1.0/ams.fetchTemplateData.do?template=TemplateN&page=MarketingOrdersSmallBusinessGuide.* Any questions about the compliance guide should be sent to Antoinette Carter at the previously mentioned address in the **FOR FURTHER INFORMATION CONTACT** section.

After consideration of all relevant material presented, including the information and recommendation submitted by the Committee and other available information, it is hereby found that this rule, as hereinafter set forth, will tend to effectuate the declared policy of the Act.

Pursuant to 5 U.S.C. 553, it also found and determined that good cause exists for not postponing the effective date of this rule until 30 days after publication in the **Federal Register** because

handlers have already received 2010 olives from growers, the fiscal year began on January 1, 2010, and the assessment rate applies to all olives received during the 2010 and subsequent seasons. Further, handlers are aware of this rule, which was recommended at a public meeting. Also, a 30-day comment period was provided for in the proposed rule.

List of Subjects in 7 CFR Part 932

Olive, Marketing agreements, Reporting and recordkeeping requirements.

■ For the reasons set forth in the preamble, 7 CFR part 932 is amended as follows:

PART 932—OLIVES GROWN IN CALIFORNIA

■ 1. The authority citation for 7 CFR part 932 continues to read as follows:

Authority: 7 U.S.C. 601–674.

■ 2. Section 932.230 is revised to read as follows:

§ 932.230 Assessment rate.

On and after January 1, 2010, an assessment rate of $44.72 per ton is established for California olives.

Dated: April 22, 2010.

David R. Shipman,

Acting Administrator, Agricultural Marketing Service.

[FR Doc. 2010–9827 Filed 4–27–10; 8:45 am]

BILLING CODE 3410–02–P

DEPARTMENT OF AGRICULTURE

Agricultural Marketing Service

7 CFR Part 996

[Docket No. AMS–FV–10–0030, FV10–996–610 Review]

Minimum Quality and Handling Standards for Domestic and Imported Peanuts Marketed in the United States; Section 610 Review

AGENCY: Agricultural Marketing Service, USDA.

ACTION: Notice of review and request for comments.

SUMMARY: This document announces that the Agricultural Marketing Service (AMS) plans to review 7 CFR part 996, Minimum Quality and Handling Standards for Domestic and Imported Peanuts Marketed in the United States, under the criteria contained in section 610 of the Regulatory Flexibility Act (RFA).

DATES: Written comments on this notice must be received by June 28, 2010.

ADDRESSES: Interested persons are invited to submit written comments concerning this notice of review. Comments must be sent to the Docket Clerk, Marketing Order Administration Branch, Fruit and Vegetable Programs, AMS, USDA, 1400 Independence Avenue, SW., Stop 0237, Washington, DC 20250–0237; Fax: (202) 720–8938, or Internet: *http://www.regulations.gov.* All comments should reference the docket number and the date and page number of this issue of the **Federal Register** and will be made available for public inspection in the Office of the Docket Clerk during regular business hours, or may be viewed at: *http://www.regulations.gov.* All comments submitted in response to this notice will be included in the record and will be made available to the public. Please be advised that the identity of the individuals or entities submitting the comments will be made public on the Internet at the address provided above.

FOR FURTHER INFORMATION CONTACT: Martin Engeler, Marketing Order Administration Branch, Fruit and Vegetable Programs, AMS, USDA, 2202 Monterey St., Fresno, California 93721; Telephone: (559) 487–5110; Fax: (559) 487–5906; or E-mail: *Martin.Engeler@ams.usda.gov.*; or Kenneth G. Johnson, DC Marketing Field Office, Marketing Order Administration Branch, Fruit and Vegetable Programs, AMS, USDA, Unit 155, 4700 River Road, Riverdale, MD 20737; Telephone: (301) 734–5243; Fax: (301) 734–5275; or E-mail: *Kenneth.Johnson@usda.gov.*

SUPPLEMENTARY INFORMATION: The Minimum Quality and Handling Standards for Domestic and Imported Peanuts Marketed in the United States (Standards), as amended (7 CFR Part 996), were established pursuant to Public Law 107–171, the Farm Security and Rural Investment Act of 2002 (Farm Bill). The Standards regulate the quality and handling of domestic and imported peanuts marketed in the United States.

AMS published in the **Federal Register** on August 14, 2003 (68 FR 48574), its plan to review certain regulations, including the Standards, under criteria contained in section 610 of the RFA (5 U.S.C. 601–612). Because many AMS regulations impact small entities, AMS has decided, as a matter of policy, to review certain regulations which, although they may not meet the threshold requirement under section 610 of the RFA, warrant review.

The purpose of the review will be to determine whether the Standards should be continued without change, amended, or rescinded, consistent with the stated objectives of applicable statutes, to minimize the impacts on small entities. In conducting this review, AMS will consider the following factors: (1) The continued need for the Standards; (2) the nature of complaints or comments received from the public concerning the Standards; (3) the complexity of the Standards; (4) the extent to which the Standards overlap, duplicate, or conflict with other Federal rules, and, to the extent feasible, with State and local governmental rules; and (5) the length of time since the Standards have been evaluated, or the degree to which technology, economic conditions, or other factors have changed in the areas affected by the Standards.

Written comments, views, opinions, and other information regarding the impact the Standards have on small businesses are invited.

Dated: April 22, 2010.

David R. Shipman,

Acting Administrator, Agricultural Marketing Service.

[FR Doc. 2010–9833 Filed 4–27–10; 8:45 am]

BILLING CODE P

DEPARTMENT OF ENERGY

10 CFR Part 430

[Docket Number EERE–2007–BT–TP–0013]

RIN 1904–AB72

Energy Conservation Program: Test Procedures for General Service Fluorescent Lamps, Incandescent Reflector Lamps, and General Service Incandescent Lamps; Correction

AGENCY: Office of Energy Efficiency and Renewable Energy, Department of Energy.

ACTION: Final rule; technical amendments.

SUMMARY: This document contains a technical correction to the final rule regarding the test procedures for general service fluorescent lamps, incandescent reflector lamps, and general service incandescent lamps, which was published in the **Federal Register** on July 6, 2009. In that final rule, the U.S. Department of Energy (DOE) adopted amendments to its test procedure regulations for the above-specified lamps. However, due to a drafting error, part of the original wording was inadvertently removed from the DOE test procedure regulations in the Code of Federal Regulations (CFR). This final rule addresses this issue and restores the correct and complete language to the regulations.

DATES: *Effective on* April 28, 2010.

FOR FURTHER INFORMATION CONTACT: Ms. Linda Graves, U.S. Department of Energy, Office of Energy Efficiency and Renewable Energy, Building Technologies Program, EE–2J, 1000 Independence Avenue, SW., Washington, DC, 20585–0121. Telephone: (202) 586–1851. E-mail: *Linda.Graves@ee.doe.gov.*

Mr. Eric Stas, U.S. Department of Energy, Office of the General Counsel, GC–71, 1000 Independence Avenue, SW., Washington, DC, 20585. Telephone: (202) 586–9507. E-mail: *mailto:Eric.Stas@hq.doe.gov.*

SUPPLEMENTARY INFORMATION:

I. Background

On July 6, 2009, DOE's Office of Energy Efficiency and Renewable Energy published a test procedure final rule in the **Federal Register** titled, "Test Procedures for General Service Fluorescent Lamps, Incandescent Reflector Lamps, and General Service Incandescent Lamps" (hereafter referred to as the "July 2009 final rule"). 74 FR 31829. Since the publication of that rule, it has come to DOE's attention that, due to a technical oversight, a certain part of the July 2009 final rule incorrectly amended a section of the DOE regulations that specified which units should be tested to demonstrate compliance with energy conservation standards. Specifically, 10 CFR 430.24(r)(1) was amended to include general service incandescent lamps, but existing details specifying requirements for manufacturer sampling of units were inadvertently removed. These existing details were previously adopted in a published test procedure final rule titled, "Fluorescent and Incandescent Lamp Test Procedures" (hereafter the "May 1997 final rule"). 62 FR 29222, 29239–40 (May 29, 1997). Today's final rule revises the relevant section to include the correct information.

II. Summary of This Action

As published, the July 2009 final rule contains an incomplete unit sampling procedure for general service fluorescent lamps, incandescent reflector lamps, and general service incandescent lamps. The purpose of the sampling procedure is to specify which units manufacturers of these lamps must test to demonstrate compliance with the applicable energy conservation standards. To correct this error, DOE is amending 10 CFR 430.24(r)(1) to again include the relevant language from the May 1997 final rule.

III. Final Action

Section 553 of Title 5, U.S. Code, (5 U.S.C. 553) generally requires agencies to provide prior notice and an opportunity for public comment on substantive rules. The requirement does not apply, however, if the agency determines that notice and opportunity for public comment can be waived for good cause if such procedures are "impracticable, unnecessary, or contrary to the public interest." DOE finds that good cause exists for dispensing with notice and opportunity for public comment in issuing today's rule. It was clearly not DOE's intention to change or eliminate the sampling requirements for general service fluorescent lamps, general service incandescent lamps, or incandescent reflector lamps. At no place in the July 2009 final rule (or the notice of proposed rulemaking that preceded it) did DOE discuss such a modification. The change in the code language was inadvertent and is currently in need of correction in order to facilitate manufacturer compliance testing. For these reasons, DOE finds that prior notice or an opportunity for comment are unnecessary, and has characterized today's rule as a "technical correction" in the **ACTION** line at the beginning of this notice.

IV. Procedural Requirements

DOE has concluded that the determinations made pursuant to the various procedural requirements applicable to the July 6, 2009 test procedure final rule remain unchanged for this final rule technical correction. These determinations are set forth in the July 6, 2009 final rule. 74 FR 31829, 31838–40.

List of Subjects in 10 CFR Part 430

Administrative practice and procedure, Confidential business information, Energy conservation, Household appliances, Imports, Incorporation by reference, Intergovernmental relations, Small businesses.

■ For the reasons stated in the preamble, part 430 of chapter II of title 10, Code of Federal Regulations, is corrected by making the following correcting amendments:

PART 430—ENERGY CONSERVATION PROGRAM FOR CONSUMER PRODUCTS

■ 1. The authority citation for part 430 continues to read as follows:

Authority: 42 U.S.C. 6291–6309; 28 U.S.C. 2461 note.

■ 2. Section 430.24 is amended by revising paragraph (r)(1) to read as follows

§ 430.24 Units to be tested.

* * * * *

(r)(1) For each basic model of general service fluorescent lamp, general service incandescent lamp, and incandescent reflector lamp, samples of production lamps shall be tested and the results for all samples shall be averaged for a 12-month period. A minimum sample of 21 lamps shall be tested. The manufacturer shall randomly select a minimum of three lamps from each month of production for a minimum of 7 out of the 12-month period. In the instance where production occurs during fewer than 7 of such 12 months, the manufacturer shall randomly select 3 or more lamps from each month of production, where the number of lamps selected for each month shall be distributed as evenly as practicable among the months of production to attain a minimum sample of 21 lamps. Any represented value of lamp efficacy of a basic model shall be based on the sample and shall be no greater than the lower of the mean of the sample or the lower 95-percent confidence limit of the true mean (X_L) divided by 0.97, *i.e.,*

$$\frac{\bar{x} - t_{0.95}\left(\frac{s}{\sqrt{n}}\right)}{0.97}$$

where:

$\bar{x}$ = the mean luminous efficacy of the sample

s = the sample standard deviation

$t_{0.95}$ = the t statistic for a 95-percent confidence limit for n-1 degrees of freedom (from statistical tables)

n = sample size

* * * * *

Issued in Washington, DC on April 22, 2010.

Cathy Zoi,

Assistant Secretary, Energy Efficiency and Renewable Energy.

[FR Doc. 2010–9830 Filed 4–27–10; 8:45 am]

BILLING CODE 6450–01–P

DEPARTMENT OF TRANSPORTATION

Federal Aviation Administration

14 CFR Part 97

[Docket No. 30720 ; Amdt. No. 3370]

Standard Instrument Approach Procedures, and Takeoff Minimums and Obstacle Departure Procedures; Miscellaneous Amendments

AGENCY: Federal Aviation Administration (FAA), DOT.

ACTION: Final Rule.

SUMMARY: This establishes, amends, suspends, or revokes Standard Instrument Approach Procedures (SIAPs) and associated Takeoff Minimums and Obstacle Departure Procedures for operations at certain airports. These regulatory actions are needed because of the adoption of new or revised criteria, or because of changes occurring in the National Airspace System, such as the commissioning of new navigational facilities, adding new obstacles, or changing air traffic requirements. These changes are designed to provide safe and efficient use of the navigable airspace and to promote safe flight operations under instrument flight rules at the affected airports.

DATES: This rule is effective April 28, 2010. The compliance date for each SIAP, associated Takeoff Minimums, and ODP is specified in the amendatory provisions.

The incorporation by reference of certain publications listed in the regulations is approved by the Director of the Federal Register as of April 28, 2010.

ADDRESSES: Availability of matters incorporated by reference in the amendment is as follows:

For Examination—

1. FAA Rules Docket, FAA Headquarters Building, 800 Independence Avenue, SW., Washington, DC 20591;

2. The FAA Regional Office of the region in which the affected airport is located;

3. The National Flight Procedures Office, 6500 South MacArthur Blvd., Oklahoma City, OK 73169 or,

4. The National Archives and Records Administration (NARA). For information on the availability of this material at NARA, call 202–741–6030, or go to: *http://www.archives.gov/federal_register/code_of_federal_regulations/ibr_locations.html.*

Availability—All SIAPs and Takeoff Minimums and ODPs are available online free of charge. Visit *http://www.nfdc.faa.gov* to register. Additionally, individual SIAP and Takeoff Minimums and ODP copies may be obtained from:

1. FAA Public Inquiry Center (APA–200), FAA Headquarters Building, 800 Independence Avenue, SW., Washington, DC 20591; or

2. The FAA Regional Office of the region in which the affected airport is located.

FOR FURTHER INFORMATION CONTACT: Harry J. Hodges, Flight Procedure Standards Branch (AFS–420), Flight Technologies and Programs Divisions, Flight Standards Service, Federal Aviation Administration, Mike Monroney Aeronautical Center, 6500 South MacArthur Blvd. Oklahoma City, OK 73169 (Mail Address: P.O. Box 25082, Oklahoma City, OK 73125) Telephone: (405) 954–4164.

SUPPLEMENTARY INFORMATION: This rule amends Title 14 of the Code of Federal Regulations, part 97 (14 CFR part 97), by establishing, amending, suspending, or revoking SIAPS, Takeoff Minimums and/or ODPS. The complete regulators description of each SIAP and its associated Takeoff Minimums or ODP for an identified airport is listed on FAA form documents which are incorporated by reference in this amendment under 5 U.S.C. 552(a), 1 CFR part 51, and 14 CFR part 97.20. The applicable FAA Forms are FAA Forms 8260–3, 8260–4, 8260–5, 8260–15A, and 8260–15B when required by an entry on 8260–15A.

The large number of SIAPs, Takeoff Minimums and ODPs, in addition to their complex nature and the need for a special format make publication in the **Federal Register** expensive and impractical. Furthermore, airmen do not use the regulatory text of the SIAPs, Takeoff Minimums or ODPs, but instead refer to their depiction on charts printed by publishers of aeronautical materials. The advantages of incorporation by reference are realized and publication of the complete description of each SIAP, Takeoff Minimums and ODP listed on FAA forms is unnecessary. This amendment provides the affected CFR sections and specifies the types of SIAPs and the effective dates of the, associated Takeoff Minimums and ODPs. This amendment also identifies the airport and its location, the procedure, and the amendment number.

The Rule

This amendment to 14 CFR part 97 is effective upon publication of each separate SIAP, Takeoff Minimums and ODP as contained in the transmittal. Some SIAP and Takeoff Minimums and textual ODP amendments may have been issued previously by the FAA in a Flight Data Center (FDC) Notice to Airmen (NOTAM) as an emergency action of immediate flight safety relating directly to published aeronautical charts. The circumstances which created the need for some SIAP and Takeoff Minimums and ODP amendments may require making them effective in less than 30 days. For the remaining SIAPS and Takeoff Minimums and ODPS, an effective date at least 30 days after publication is provided.

Further, the SIAPs and Takeoff Minimums and ODPS contained in this amendment are based on the criteria contained in the U.S. Standard for Terminal Instrument Procedures (TERPS). In developing these SIAPS and Takeoff Minimums and ODPs, the TERPS criteria were applied to the conditions existing or anticipated at the affected airports. Because of the close and immediate relationship between these SIAPs, Takeoff Minimums and ODPs, and safety in air commerce, I find that notice and public procedures before adopting these SIAPS, Takeoff Minimums and ODPs are impracticable and contrary to the public interest and, where applicable, that good cause exists for making some SIAPs effective in less than 30 days.

Conclusion

The FAA has determined that this regulation only involves an established body of technical regulations for which frequent and routine amendments are necessary to keep them operationally current. It, therefore—(1) Is not a "significant regulatory action" under Executive Order 12866; (2) is not a "significant rule " under DOT Regulatory Policies and Procedures (44 FR 11034; February 26,1979); and (3) does not warrant preparation of a regulatory evaluation as the anticipated impact is so minimal. For the same reason, the FAA certifies that this amendment will not have a significant economic impact on a substantial number of small entities under the criteria of the Regulatory Flexibility Act.

List of Subjects in 14 CFR Part 97

Air Traffic Control, Airports, Incorporation by reference, and Navigation (Air).

Issued in Washington, DC on April 16, 2010.

John M. Allen,

Director, Flight Standards Service.

Adoption of the Amendment

■ Accordingly, pursuant to the authority delegated to me, Title 14, Code of Federal Regulations, part 97 (14 CFR part 97) is amended by establishing, amending, suspending, or revoking Standard Instrument Approach Procedures and/or Takeoff Minimums and/or Obstacle Departure Procedures effective at 0902 UTC on the dates specified, as follows:

PART 97—STANDARD INSTRUMENT APPROACH PROCEDURES

■ 1. The authority citation for part 97 continues to read as follows:

Authority: 49 U.S.C. 106(g), 40103, 40106, 40113, 40114, 40120, 44502, 44514, 44701, 44719, 44721–44722.

■ 2. Part 97 is amended to read as follows:

Effective 3 JUN 2010

Kotzebue, AK, Ralph Wien Memorial, RNAV (GPS) RWY 9, Amdt 2
Alexander City, AL, Thomas C Russell Fld, NDB–A, Amdt 2
Alexander City, AL, Thomas C Russell Fld, RNAV (GPS) RWY 18, Orig
Alexander City, AL, Thomas C Russell Fld, RNAV (GPS) RWY 36, Amdt 1
Alexander City, AL, Thomas C Russell Fld, Takeoff Minimums and Obstacle DP, Amdt 2
Wetumpka, AL, Wetumpka Muni, RNAV (GPS) RWY 9, Orig
Wetumpka, AL, Wetumpka Muni, RNAV (GPS) RWY 27, Orig
Wetumpka, AL, Wetumpka Muni, Takeoff Minimums and Obstacle DP, Orig
Wetumpka, AL, Wetumpka Muni, VOR–A, Amdt 2
Windsor Locks, CT, Bradley Intl, Takeoff Minimums and Obstacle DP, Amdt 3
Fernandina, FL, Fernandina Beach Muni, RNAV (GPS) RWY 13, Amdt 1
Fernandina, FL, Fernandina Beach Muni, RNAV (GPS) RWY 22, Orig
Tampa, FL, Tampa Executive, GPS RWY 18, Amdt 1C, CANCELLED
Tampa, FL, Tampa Executive, RNAV (GPS) RWY 18, Orig
Lagrange, GA, Lagrange-Callaway, RNAV (GPS) RWY 13, Orig-A
Lagrange, GA, Lagrange-Callaway, RNAV (GPS) RWY 31, Orig-A
Ames, IA, Ames Muni, RNAV (GPS) RWY 1, Amdt 2
Ames, IA, Ames Muni, RNAV (GPS) RWY 13, Amdt 1
Ames, IA, Ames Muni, RNAV (GPS) RWY 19, Amdt 1
Ames, IA, Ames Muni, RNAV (GPS) RWY 31, Amdt 1
Centerville, IA, Centerville Muni, RNAV (GPS) RWY 16, Orig
Centerville, IA, Centerville Muni, RNAV (GPS) RWY 34, Orig
Centerville, IA, Centerville Muni, Takeoff Minimums and Obstacle DP, Orig
Maquoketa, IA, Maquoketa Muni, GPS RWY 15, Orig, CANCELLED
Maquoketa, IA, Maquoketa Muni, GPS RWY 33, Orig, CANCELLED
Maquoketa, IA, Maquoketa Muni, RNAV (GPS) RWY 15, Orig
Maquoketa, IA, Maquoketa Muni, RNAV (GPS) RWY 33, Orig
Maquoketa, IA, Maquoketa Muni, Takeoff Minimums and Obstacle DP, Amdt 1
Sac City, IA, Sac City Muni, RNAV (GPS) RWY 36, Orig
Sac City, IA, Sac City Muni, NDB RWY 36, Amdt 4
Sac City, IA, Sac City Muni, Takeoff Minimums and Obstacle DP, Orig
Sioux Center, IA, Sioux Center Muni, NDB RWY 18, Amdt 5
Sioux Center, IA, Sioux Center Muni, RNAV (GPS) RWY 18, Orig
Sioux Center, IA, Sioux Center Muni, Takeoff Minimums and Obstacle DP, Amdt 2
Spencer, IA, Spencer Muni, GPS RWY 18, Orig, CANCELLED
Spencer, IA, Spencer Muni, GPS RWY 36, Orig, CANCELLED
Spencer, IA, Spencer Muni, ILS OR LOC RWY 12, Amdt 2
Spencer, IA, Spencer Muni, RNAV (GPS) RWY 12, Orig
Spencer, IA, Spencer Muni, RNAV (GPS) RWY 18, Orig
Spencer, IA, Spencer Muni, RNAV (GPS) RWY 30, Orig
Spencer, IA, Spencer Muni, RNAV (GPS) RWY 36, Orig
Spencer, IA, Spencer Muni, Takeoff Minimums and Obstacle DP, Orig
Spencer, IA, Spencer Muni, VOR RWY 12, Amdt 3
Bloomington/Normal, IL, Central IL Rgnl Arpt At Bloomington-Normal, RNAV (GPS) RWY 11, Amdt 1
Angola, IN, Tri-State Steuben County, RNAV (GPS) RWY 5, Orig-A
Fort Wayne, IN, Fort Wayne Intl, ILS OR LOC RWY 5, ILS RWY 5 (CAT II), Amdt 15A
Fort Wayne, IN, Fort Wayne Intl, VOR OR TACAN RWY 23, Amdt 13A
Frankfort, IN, Frankfort Muni, Takeoff Minimums and Obstacle DP, Orig
Nappanee, IN, Nappanee Muni, VOR/DME OR GPS–A, Amdt 3B
Warsaw, IN, Warsaw Muni, ILS OR LOC/DME RWY 27, Orig-D
Warsaw, IN, Warsaw Muni, VOR RWY 27, Amdt 6C
Warsaw, IN, Warsaw Muni, VOR OR GPS RWY 9, Amdt 5C
Coffeyville, KS, Coffeyville Muni, RNAV (GPS) RWY 35, Orig
Chatham, MA, Chatham Muni, NDB–A, Amdt 1
Chatham, MA, Chatham Muni, RNAV (GPS)-B, Orig
Stow, MA, Minute Man Airfield, NDB–A, Amdt 8
Stow, MA, Minute Man Airfield, RNAV (GPS) RWY 21, Orig
Westfield/Springfield, MA, Barnes Muni, GPS RWY 2, Orig-B, CANCELLED
Westfield/Springfield, MA, Barnes Muni, RNAV (GPS) RWY 2, Orig
Westfield/Springfield, MA, Barnes Muni, Takeoff Minimums and Obstacle DP, Amdt 4
Westminster, MD, Carroll County Rgnl/Jack B Poage Field, RNAV (GPS) RWY 34, Amdt 1
Grayling, MI, Grayling AAF, NDB RWY 14, Amdt 8
Grayling, MI, Grayling AAF, Takeoff Minimums and Obstacle DP, Amdt 3
Marquette, MI, Sawyer Intl, RNAV (GPS) RWY 19, Amdt 1
Muskegon, MI, Muskegon County, RADAR–1, Amdt 15
Oscoda, MI, Oscoda-Wurtsmith, ILS OR LOC/DME RWY 24, Amdt 3
Oscoda, MI, Oscoda-Wurtsmith, RNAV (GPS) RWY 24, Orig
Baudette, MN, Baudette Intl, Takeoff Minimums and Obstacle DP, Amdt 1
Crookston, MN, Crookston Muni/Kirkwood Fld, NDB RWY 13, Amdt 9
Duluth, MN, Sky Harbor, NDB OR GPS–B, Amdt 1, CANCELLED
Columbus, MS, Columbus-Lowndes County, RNAV (GPS) RWY 18, Orig
Columbus, MS, Columbus-Lowndes County, RNAV (GPS) RWY 36, Orig
Columbus, MS, Columbus-Lowndes County, VOR–A, Amdt 13
Sidney, MT, Sidney Richland Muni, NDB RWY 1, Amdt 3
Sidney, MT, Sidney Richland Muni, NDB RWY 19, Amdt 4
Sidney, MT, Sidney Richland Muni, RNAV (GPS) RWY 1, Amdt 1
Sidney, MT, Sidney Richland Muni, RNAV (GPS) RWY 19, Amdt 1
Sidney, MT, Sidney Richland Muni, Takeoff Minimums and Obstacle DP, Amdt 4
Mount Airy, NC, Mount Airy/Surry County, GPS RWY 36, Orig-A, CANCELLED
Mount Airy, NC, Mount Airy/Surry County, RNAV (GPS) RWY 18, Orig
Mount Airy, NC, Mount Airy/Surry County, RNAV (GPS) RWY 36, Orig

Gwinner, ND, Gwinner-Roger Melroe Field, RNAV (GPS) RWY 16, Amdt 3
Gwinner, ND, Gwinner-Roger Melroe Field, RNAV (GPS) RWY 34, Amdt 3
Watford City, ND, Watford City Muni, GPS RWY 30, Orig, CANCELLED
Watford City, ND, Watford City Muni, RNAV (GPS) RWY 12, Orig
Watford City, ND, Watford City Muni, RNAV (GPS) RWY 30, Orig
Watford City, ND, Watford City Muni, Takeoff Minimums and Obstacle DP, Amdt 1
Endicott, NY, Tri-Cities, Takeoff Minimums and Obstacle DP, Amdt 4
Farmingdale, NY, Republic, Takeoff Minimums and Obstacle DP, Amdt 6
Jamestown, NY, Chautauqua County/Jamestown, RNAV (GPS) RWY 25, Amdt 1A
Fostoria, OH, Fostoria Metropolitan, RNAV (GPS) RWY 27, Amdt 1
Wilmington, OH, Airborne Airpark, ILS OR LOC RWY 4L, Amdt 4B
Buffalo, OK, Buffalo Muni, Takeoff Minimums and Obstacle DP, Orig
Oklahoma City, OK, Sundance Airpark, Takeoff Minimums and Obstacle DP, Amdt 1
Pauls Valley, OK, Pauls Valley Muni, RNAV (GPS) RWY 17, Orig
Madras, OR, Madras Muni, RNAV (GPS) RWY 16, Orig
Madras, OR, Madras Muni, RNAV (GPS)-A, Amdt 1
Madras, OR, Madras Muni, Takeoff Minimums and Obstacle DP, Amdt 1
Portland, OR, Portland-Hillsboro, ILS OR LOC RWY 12, Amdt 9
Portland, OR, Portland-Hillsboro, RNAV (GPS) RWY 12, Amdt 1
Portland, OR, Portland-Hillsboro, RNAV (GPS) RWY 30, Orig
Portland, OR, Portland-Hillsboro, Takeoff Minimums and Obstacle DP, Amdt 6
Bedford, PA, Bedford County, RNAV (GPS) RWY 14, Amdt 1
Bedford, PA, Bedford County, RNAV (GPS) RWY 32, Amdt 1
Honesdale, PA, Cherry Ridge, Takeoff Minimums and Obstacle DP, Amdt 4
Pickens, SC, Pickens County, NDB RWY 5, Amdt 1
Pickens, SC, Pickens County, RNAV (GPS) RWY 5, Orig
Pickens, SC, Pickens County, RNAV (GPS) RWY 23, Orig
Pickens, SC, Pickens County, VOR/DME–A, Amdt 1
Athens, TX, Athens Muni, RNAV (GPS) RWY 17, Orig
Athens, TX, Athens Muni, RNAV (GPS) RWY 35, Orig
Athens, TX, Athens Muni, Takeoff Minimums and Obstacle DP, Orig
Martinsville, VA, Blue Ridge, LOC RWY 30, Amdt 1
Quinton, VA, New Kent County, RNAV (GPS) RWY 10, Amdt 1
Quinton, VA, New Kent County, RNAV (GPS) RWY 28, Amdt 1
Quinton, VA, New Kent County, Takeoff Minimums and Obstacle DP, Amdt 1
Spokane, WA, Spokane Intl, RNAV (GPS) RWY 3, Amdt 1
Spokane, WA, Spokane Intl, Takeoff Minimums and Obstacle DP, Amdt 5
West Bend, WI, West Bend Muni, VOR RWY 24, Amdt 3
Fairmont, WV, Fairmont Muni-Frankman Field, RNAV (GPS) RWY 23, Amdt 1

[FR Doc. 2010–9380 Filed 4–27–10; 8:45 am]

BILLING CODE 4910–13–P

DEPARTMENT OF TRANSPORTATION

14 CFR Part 97

[Docket No. 30721 ; Amdt. No. 3371]

Standard Instrument Approach Procedures, and Takeoff Minimums and Obstacle Departure Procedures; Miscellaneous Amendments

AGENCY: Federal Aviation Administration (FAA), DOT.

ACTION: Final rule.

SUMMARY: This rule establishes, amends, suspends, or revokes Standard Instrument Approach Procedures (SIAPs) and associated Takeoff Minimums and Obstacle Departure Procedures for operations at certain airports. These regulatory actions are needed because of the adoption of new or revised criteria, or because of changes occurring in the National Airspace System, such as the commissioning of new navigational facilities, adding new obstacles, or changing air traffic requirements. These changes are designed to provide safe and efficient use of the navigable airspace and to promote safe flight operations under instrument flight rules at the affected airports.

DATES: This rule is effective April 28, 2010. The compliance date for each SIAP, associated Takeoff Minimums, and ODP is specified in the amendatory provisions.

The incorporation by reference of certain publications listed in the regulations is approved by the Director of the Federal Register as of April 28, 2010.

ADDRESSES: Availability of matter incorporated by reference in the amendment is as follows:

For Examination–

1. FAA Rules Docket, FAA Headquarters Building, 800 Independence Avenue, SW., Washington, DC 20591;

2. The FAA Regional Office of the region in which the affected airport is located;

3. The National Flight Procedures Office, 6500 South MacArthur Blvd., Oklahoma City, OK 73169 or,

4. The National Archives and Records Administration (NARA). For information on the availability of this material at NARA, call 202–741–6030, or go to: *http://www.archives.gov/federal_register/code_of_federal_regulations/ibr_locations.html.*

Availability—All SIAPs are available online free of charge. Visit *http://nfdc.faa.gov* to register. Additionally, individual SIAP and Takeoff Minimums and ODP copies may be obtained from:

1.FAA Public Inquiry Center (APA–200), FAA Headquarters Building, 800 Independence Avenue, SW., Washington, DC 20591; or

2.The FAA Regional Office of the region in which the affected airport is located.

FOR FURTHER INFORMATION CONTACT: Harry J. Hodges, Flight Procedure Standards Branch (AFS–420) Flight Technologies and Programs Division, Flight Standards Service, Federal Aviation Administration, Mike Monroney Aeronautical Center, 6500 South MacArthur Blvd., Oklahoma City, OK. 73169 (Mail Address: P.O. Box 25082, Oklahoma City, OK 73125) telephone: (405) 954–4164.

SUPPLEMENTARY INFORMATION: This rule amends Title 14, Code of Federal Regulations, part 97 (14 CFR part 97) by amending the referenced SIAPs. The complete regulatory description of each SIAP is listed on the appropriate FAA Form 8260, as modified by the National Flight Data Center (FDC)/Permanent Notice to Airmen (P–NOTAM), and is incorporated by reference in the amendment under 5 U.S.C. 552(a), 1 CFR part 51, and § 97.20 of Title 14 of the Code of Federal Regulations.

The large number of SIAPs, their complex nature, and the need for a special format make their verbatim publication in the **Federal Register** expensive and impractical. Further, airmen do not use the regulatory text of the SIAPs, but refer to their graphic depiction on charts printed by publishers of aeronautical materials. Thus, the advantages of incorporation

by reference are realized and publication of the complete description of each SIAP contained in FAA form documents is unnecessary. This amendment provides the affected CFR sections and specifies the types of SIAP and the corresponding effective dates. This amendment also identifies the airport and its location, the procedure and the amendment number.

The Rule

This amendment to 14 CFR part 97 is effective upon publication of each separate SIAP as amended in the transmittal. For safety and timeliness of change considerations, this amendment incorporates only specific changes contained for each SIAP as modified by FDC/P–NOTAMs.

The SIAPs, as modified by FDC P–NOTAM, and contained in this amendment are based on the criteria contained in the U.S. Standard for Terminal Instrument Procedures (TERPS). In developing these changes to SIAPs, the TERPS criteria were applied only to specific conditions existing at the affected airports. All SIAP amendments in this rule have been previously issued by the FAA in a FDC NOTAM as an emergency action of immediate flight safety relating directly to published aeronautical charts. The circumstances which created the need for all these SIAP amendments requires making them effective in less than 30 days.

Because of the close and immediate relationship between these SIAPs and safety in air commerce, I find that notice and public procedure before adopting these SIAPs are impracticable and contrary to the public interest and, where applicable, that good cause exists for making these SIAPs effective in less than 30 days.

Conclusion

The FAA has determined that this regulation only involves an established body of technical regulations for which frequent and routine amendments are necessary to keep them operationally current. It, therefore—(1) Is not a "significant regulatory action" under Executive Order 12866; (2) is not a "significant rule" under DOT regulatory Policies and Procedures (44 FR 11034; February 26, 1979); and (3) does not warrant preparation of a regulatory evaluation as the anticipated impact is so minimal. For the same reason, the FAA certifies that this amendment will not have a significant economic impact on a substantial number of small entities under the criteria of the Regulatory Flexibility Act.

List of Subjects in 14 CFR part 97

Air Traffic Control, Airports, Incorporation by reference, and Navigation (Air).

Issued in Washington, DC on April 16, 2010.

John M. Allen,

Director, Flight Standards Service.

Adoption of the Amendment

■ Accordingly, pursuant to the authority delegated to me, Title 14, Code of Federal regulations, part 97, 14 CFR part 97, is amended by amending Standard Instrument Approach Procedures, effective at 0901 UTC on the dates specified, as follows:

PART 97—STANDARD INSTRUMENT APPROACH PROCEDURES

■ 1. The authority citation for part 97 continues to read as follows:

Authority: 49 U.S.C. 106(g), 40103, 40106, 40113, 40114, 40120, 44502, 44514, 44701, 44719, 44721–44722.

■ 2. Part 97 is amended to read as follows:

By amending: § 97.23 VOR, VOR/DME, VOR or TACAN, and VOR/DME or TACAN; § 97.25 LOC, LOC/DME, LDA, LDA/DME, SDF, SDF/DME; § 97.27 NDB, NDB/DME; § 97.29 ILS, ILS/DME, MLS, MLS/DME, MLS/RNAV; § 97.31 RADAR SIAPs; § 97.33 RNAV SIAPs; and § 97.35 COPTER SIAPs, Identified as follows:

* * * Effective Upon Publication

AIRAC Date	State	City	Airport	FDC No.	FDC Date	Subject
3-Jun-10	MI	Ironwood	Gogebic-Iron County	0/1214	3/26/10	ILS Rwy 27, Amdt 3
3-Jun-10	OK	Muskogee	Davis Field	0/1302	3/19/10	RNAV (GPS) Rwy 31, Amdt 1
3-Jun-10	MN	Staples	Staples Muni	0/1304	3/26/10	NDB or GPS Rwy 14, Amdt 2A
3-Jun-10	LA	Monroe	Monroe Rgnl	0/1689	3/23/10	RNAV (GPS) Rwy 22, Orig
3-Jun-10	LA	Monroe	Monroe Rgnl	0/1690	3/23/10	VOR Rwy 22, Amdt 4
3-Jun-10	LA	Monroe	Monroe Rgnl	0/1692	3/23/10	VOR/DME Rwy 22, Amdt 8A
3-Jun-10	LA	Monroe	Monroe Rgnl	0/1695	3/23/10	VOR/DME Rwy 4, Amdt 1A
3-Jun-10	LA	Monroe	Monroe Rgnl	0/1696	3/23/10	ILS Rwy 22, Amdt 3B
3-Jun-10	AL	Anniston	Anniston Metropolitian	0/1704	4/8/10	ILS or LOC Rwy 5, Amdt 3
3-Jun-10	AL	Anniston	Anniston Metropolitian	0/1705	4/8/10	NDB Rwy 5, Amdt 4
3-Jun-10	IN	Winchester	Randolph County	0/2144	3/26/10	GPS Rwy 25, Orig
3-Jun-10	IL	Pittsfield	Pittsfield Penstone Muni	0/2145	4/9/10	RNAV (GPS) Rwy 13, Orig
3-Jun-10	KS	Ulysses	Ulysses	0/2257	3/26/10	NDB Rwy 12, Amdt 3
3-Jun-10	MI	Big Rapids	Roben-Hood	0/2261	4/9/10	GPS Rwy 27, Orig-A
3-Jun-10	TX	Van Horn	Culberson County	0/2262	3/26/10	NDB Rwy 21, Amdt 2
3-Jun-10	MI	Big Rapids	Roben-Hood	0/2263	4/9/10	VOR/DME or GPS A, Amdt 7
3-Jun-10	OH	New Lexington	Perry County	0/2268	4/9/10	RNAV (GPS) Rwy 26, Orig
3-Jun-10	OH	Versailles	Darke County	0/2303	4/9/10	Takeoff Minimums and Obstacle DP, Amdt 2
3-Jun-10	KS	Ulysses	Ulysses	0/2486	3/29/10	RNAV (GPS) Rwy 17, Amdt 1
3-Jun-10	NM	Raton	Raton Muni/Crews Field	0/2520	3/29/10	GPS Rwy 2, Amdt 1
3-Jun-10	MI	Mason	Mason Jewett Field	0/2522	4/9/10	Takeoff Minimums and Obstacle DP, Amdt 2
3-Jun-10	VT	Lyndonville	Caledonia County	0/2531	4/14/10	NDB Rwy 2, Amdt 4
3-Jun-10	PA	Butler	Butler County/K W Scholter Fld.	0/2621	4/9/10	ILS or LOC Rwy 8, Amdt 7A
3-Jun-10	MI	Lakeview	Lakeview Airport-Griffith Field	0/2964	4/13/10	VOR/DME Rwy 9, Orig-A
3-Jun-10	MN	Eveleth	Eveleth-Virginia Muni	0/2967	4/13/10	VOR Rwy 27, Orig
3-Jun-10	MN	Mora	Mora Muni	0/2975	4/13/10	NDB or GPS Rwy 35, Amdt 3
3-Jun-10	MN	Fosston	Fosston Muni	0/2976	4/13/10	NDB or GPS Rwy 34, Amdt 3A
3-Jun-10	IL	Peoria	Mount Hawley Auxiliary	0/3100	4/13/10	Takeoff Minimums and Obstacle DP, Amdt 2
3-Jun-10	MN	Moorhead	Moorhead Muni	0/3101	4/13/10	RNAV (GPS) Rwy 30, Orig

AIRAC Date	State	City	Airport	FDC No.	FDC Date	Subject
3-Jun-10	MN	Fairmont	Fairmont Muni	0/3102	4/13/10	ILS or LOC Rwy 31, Orig-C
3-Jun-10	MN	Park Rapids	Park Rapids Muni-Konshok Field.	0/3103	4/13/10	NDB or GPS Rwy 31, Amdt 1B
3-Jun-10	PA	Honesdale	Cherry Ridge	0/3104	4/14/10	VOR A, Amdt 5
3-Jun-10	MN	Park Rapids	Park Rapids Muni-Konshok Field.	0/3106	4/13/10	VOR/DME or GPS Rwy 13, Amdt 8B
3-Jun-10	MN	Park Rapids	Park Rapids Muni-Konshok Field.	0/3107	4/13/10	ILS Rwy 31, Amdt 1A
3-Jun-10	PA	Hazleton	Hazleton Muni	0/3108	4/14/10	VOR Rwy 10, Amdt 10D
3-Jun-10	PA	Hazleton	Hazleton Muni	0/3109	4/14/10	LOC Rwy 28, Amdt 5D
3-Jun-10	PA	Hazleton	Hazleton Muni	0/3110	4/14/10	VOR Rwy 28, Amdt 8D
3-Jun-10	MI	Muskegon	Muskegon County	0/3112	4/9/10	LOC BC Rwy 14, Amdt 9
3-Jun-10	MI	Muskegon	Muskegon County	0/3113	4/9/10	ILS or LOC Rwy 32, Amdt 18
3-Jun-10	MI	Muskegon	Muskegon County	0/3115	4/9/10	VOR/DME Rwy 6, Amdt 11
3-Jun-10	MN	Springfield	Springfield Muni	0/3174	4/13/10	VOR/DME or GPS Rwy 13, Amdt 2C
3-Jun-10	MN	Marshall	Southwest Minnesota Rgnl Marshall/Ryan Field.	0/3180	4/13/10	VOR Rwy 12, Amdt 8
3-Jun-10	MN	Marshall	Southwest Minnesota Rgnl Marshall/Ryan Field.	0/3181	4/13/10	ILS or LOC Rwy 12, Amdt 2
3-Jun-10	MN	Marshall	Southwest Minnesota Rgnl Marshall/Ryan Field.	0/3182	4/13/10	VOR/DME Rwy 30, Amdt 2A
3-Jun-10	MI	Marquette	Sawyer International	0/3540	4/9/10	ILS Rwy 1, Orig-A
3-Jun-10	MI	Marlette	Marlette	0/3541	4/9/10	RNAV (GPS) Rwy 9, Orig-A
3-Jun-10	MI	Alpena	Alpena County Rgnl	0/3542	4/9/10	ILS Rwy 1, Amdt 8B
3-Jun-10	MI	Sault Ste Marie	Sault Ste Marie Muni/ Sanderson Field.	0/3567	4/9/10	VOR or GPS Rwy 32, Amdt 2
3-Jun-10	MI	Marquette	Sawyer International	0/3598	4/9/10	NDB Rwy 1, Orig
3-Jun-10	MI	Marlette	Marlette	0/3602	4/9/10	RNAV (GPS) Rwy 27, Orig-A
3-Jun-10	PA	Pottsville	Shuylkill County/Joe Zerbey	0/4401	4/14/10	VOR or GPS Rwy 4, Amdt 5A
3-Jun-10	GA	Blakely	Early County	0/4419	4/9/10	RNAV (GPS) Rwy 23, Amdt 1
3-Jun-10	TN	Lebanon	Lebanon Muni	0/4537	4/14/10	VOR/DME A, Amdt 10
3-Jun-10	GA	Winder	Barrow County	0/4594	4/14/10	ILS or LOC Rwy 31, Orig
3-Jun-10	OK	Medford	Medford Muni	0/4820	2/8/10	RNAV (GPS) Rwy 35, Orig-A
3-Jun-10	IL	Peoria	General Downing—Peoria Intl	0/4862	4/9/10	ILS Rwy 13, Amdt 6C

[FR Doc. 2010–9378 Filed 4–27–10; 8:45 am]
BILLING CODE 4910–13–P

DEPARTMENT OF THE INTERIOR

Minerals Management Service

30 CFR Part 250

[Docket ID: MMS–2008–OMM–0044]

RIN 1010–AD54

Update of Revised and Reaffirmed Documents Incorporated by Reference

AGENCY: Minerals Management Service (MMS), Interior.

ACTION: Final rule.

SUMMARY: This final rule incorporates 21 revised editions and 17 reaffirmed editions of documents previously incorporated by reference in regulations governing oil and gas and sulphur operations in the Outer Continental Shelf. Additionally, this final rule will rectify an incorrect reference to American Petroleum Institute (API) 510. The revised and reaffirmed editions of these documents will ensure that lessees use the best and safest technologies available while operating in the Outer Continental Shelf.

DATES: *Effective Date:* This final rule is effective May 28, 2010. The incorporation by reference of publications listed in the regulation is approved by the Director of the Federal Register as of May 28, 2010.

FOR FURTHER INFORMATION CONTACT: Wilbon Rhome at (703) 787–1587.

SUPPLEMENTARY INFORMATION: The MMS uses standards, specifications, and recommended practices developed by standard-setting organizations and the oil and gas industry as a means of establishing requirements for activities on the Outer Continental Shelf (OCS). This practice, known as incorporation by reference, allows us to incorporate the provisions of technical standards into the regulations. The legal effect of incorporation by reference is that the material is treated as if the entire document was published in the **Federal Register.** This material, like any other properly issued regulation, then has the force and effect of law. We hold operators/lessees accountable for complying with the documents incorporated by reference in our regulations. We currently incorporate by reference 97 consensus standards into the offshore operating regulations.

The regulations at 1 CFR part 51 govern how we and other Federal agencies incorporate various documents by reference. Agencies may only incorporate a document by reference by publishing the document title and affirmation/reaffirmation date in the **Federal Register.** Agencies must also gain approval from the Director of the Federal Register for each publication incorporated by reference. Incorporation by reference of a document or publication is limited to the specific edition, supplement, or addendum cited in the regulations. The MMS is reformatting the appearance of this section in the regulations concerning documents incorporated by reference. This section, 30 CFR 250.198, will now be formatted to be consistent with the guidance provided by the Office of the Federal Register. This new format will continue to clearly identify the documents incorporated by reference in the 30 CFR part 250 regulations.

Under 5 U.S.C. 553 and the regulations found at 30 CFR 250.198(a), MMS may update documents without an opportunity for public comment when we determine that the revisions to

a document result in safety improvements, or represent new industry standard technology and do not impose undue cost or burden on the affected parties. Accordingly, this final rule incorporates the revised editions of 21 documents and 17 reaffirmed documents previously incorporated by reference in regulations governing oil and gas and sulphur operations in the OCS. These new and reaffirmed documents will ensure that lessees use the best and safest technologies available while operating in the OCS.

In this final rule, "reaffirmed" references an action taken by the American Petroleum Institute (API) standards committee, normally within a 5-year timeframe, and confirms that the information contained within the standard is still applicable and requires no change at this time. Also, the edition number and date of the standard does not change as a result of reaffirmation by the standards committee. Additionally, we are correcting a reference to API 510, Pressure Vessel Inspections Code: In-Service Inspection, Rating, Repair, and Alteration, in our regulations at § 250.803(b)(1) and § 250.1629(b)(1) to make a section reference change (from 6.5 and 8.5 to 5.8 and 9.5).

The MMS has reviewed these documents and determined the revised editions must be incorporated into the regulations to ensure the use of the best and safest technologies. Our review shows that changes between the old and new editions result in safety improvements, or represent new industry standard technology and will not impose undue cost or burden on the offshore oil and gas industry. Furthermore, old editions may not be readily available to the affected parties because they are out of publication, so we are amending our regulations to incorporate the updated editions.

Revised Editions

The revised editions of the documents incorporated by reference in this final rule are:

Title of Documents
API MPMS, Chapter 10—Sediment and Water, Section 1—Standard Test Method for Sediment in Crude Oils and Fuel Oils by the Extraction Method, Third Edition, November 2007; Product No. H10013.
API MPMS, Chapter 10—Sediment and Water, Section 2—Standard Test; Method for Water in Crude Oil by Distillation, Second Edition, November 2007; Product No. H10022.
API MPMS, Chapter 10—Sediment and Water, Section 3—Standard Test Method for Water and Sediment in Crude Oil by the Centrifuge Method (Laboratory Procedure), Third Edition, May 2008; Product No. H10033.
API MPMS, Chapter 14.5/GPA Standard 2172–09; Calculation of Gross Heating Value, Relative Density, Compressibility and Theoretical Hydrocarbon Liquid Content for Natural Gas Mixtures for Custody Transfer; Third Edition, January 2009; Adopted as Tentative Standard, 1972; Revised and Adopted as Standard, 1976; Revised 1984, 1986, 1996, 2009; Product No. H140503.
API RP 2A–WSD, Recommended Practice for Planning, Designing and Constructing Fixed Offshore Platforms—Working Stress Design, Twenty-first Edition, December 2000; Errata and Supplement 1, December 2002; Errata and Supplement 2, September 2005, Errata and Supplement 3, October 2007; Product No. G2AWSD.
API RP 2D, Operation and Maintenance of Offshore Cranes, Sixth Edition, May 2007; Product No. G02D06.
API RP 2I, In-service Inspection of Mooring Hardware for Floating Structures, Third Edition, April 2008; Product No. G02I03.
API RP 2SK, Design and Analysis of Stationkeeping Systems for Floating Structures, Third Edition, October 2005, Addendum, May 2008; Product No. G2SK03.
API RP 2SM Recommended Practice for Design, Manufacture, Installation, and Maintenance of Synthetic Fiber Ropes for Offshore Mooring, First Edition, March 2001, Addendum, May 2007; Product No. G02SM1.
API RP 14F, Design, Installation, and Maintenance of Electrical Systems for Fixed and Floating Offshore Petroleum Facilities for Unclassified and Class I, Division 1 and Division 2 Locations, Fifth Edition, July 2008; Product No. G14F05.
API RP 14G, Recommended Practice for Fire Prevention and Control on Fixed Open-Type Offshore Production Platforms, Fourth Edition, April 2007; Product No. G14G04.
API RP 14H, Recommended Practice for Installation, Maintenance and Repair of Surface Safety Valves and Underwater Safety Valves Offshore, Fifth Edition, August 2007; Product No. G14H05.
ANSI/API Spec. Q1, Specification for Quality Programs for the Petroleum, Petrochemical and Natural Gas Industry, ISO TS 29001:2007 (Identical), Petroleum, petrochemical and natural gas industries—Sector specific requirements—Requirements for product and service supply organizations, Eighth Edition, December 2007, Effective Date: June 15, 2008; Product No. GXQ108.
ANSI/API Spec. 6A, Specification for Wellhead and Christmas Tree Equipment, Nineteenth Edition, July 2004; Effective Date: February 1, 2005; Contains API Monogram Annex as Part of U.S. National Adoption; ISO 10423:2003 (Modified), Petroleum and natural gas industries—Drilling and production equipment—Wellhead and Christmas tree equipment; Errata 1, September 2004, Errata 2, April 2005, Errata 3, June 2006, Errata 4, August 2007, Errata 5, May 2009; Addendum 1, February 2008; Addendum 2, 3, and 4, December 2008; Product No. GX06A19.
ANSI/API Spec. 6D, Specification for Pipeline Valves, Twenty-third Edition, April 2008; Effective Date: October 1, 2008, Errata 1, June 2008; Errata 2, November 2008; Errata 3, February 2009; Addendum 1, October 2009; Contains API Monogram Annex as Part of U.S. National Adoption; ISO 14313:2007 (Identical), Petroleum and natural gas industries—Pipeline transportation systems—Pipeline valves; Product No. GX6D23.
ANSI/API Spec. 17J, Specification for Unbonded Flexible Pipe, Third Edition, July 2008; Effective Date: January 1, 2009, Contains API Monogram Annex as Part of U.S. National Adoption; ISO 13628–2:2006 (Identical), Petroleum and natural gas industries—Design and operation of subsea production systems—Part 2: Unbonded flexible pipe systems for subsea and marine application; Product No. GX17J03.
ASTM Standard C 33–07, approved December 15, 2007, Standard Specification for Concrete Aggregates.
ASTM Standard C 94/C 94M–07, approved January 1, 2007, Standard Specification for Ready-Mixed Concrete.
ASTM Standard C 150–07, approved May 1, 2007, Standard Specification for Portland Cement.
ASTM Standard C 330–05, approved December 15, 2005, Standard Specification for Lightweight Aggregates for Structural Concrete.
ASTM Standard C 595–08, approved January 1, 2008, Standard Specification for Blended Hydraulic Cements.

Reaffirmed Documents

The reaffirmed documents incorporated by reference in this final rule are:

Title of Documents

API MPMS, Chapter 2—Tank Calibration, Section 2A—Measurement and Calibration of Upright Cylindrical Tanks by the Manual Tank Strapping Method, First Edition, February 1995; reaffirmed February 2007, Order No. 852–022A1.
API MPMS, Chapter 2—Tank Calibration, Section 2B—Calibration of Upright Cylindrical Tanks Using the Optical Reference Line Method, First Edition, March 1989; reaffirmed, December 2007, Order No. H30023.
API MPMS, Chapter 3—Tank Gauging, Section 1B—Standard Practice for Level Measurement of Liquid Hydrocarbons in Stationary Tanks by Automatic Tank Gauging, Second Edition, June 2001; reaffirmed, October 2006, Product No. H301B2.
API MPMS, Chapter 4—Proving Systems, Section 4—Tank Provers, Second Edition, May 1998; reaffirmed November 2005, Order No. H04042.
API MPMS, Chapter 4—Proving Systems, Section 5—Master-Meter Provers, Second Edition, May 2000; reaffirmed: August 2005, Order No. H04052.
API MPMS, Chapter 6—Metering Assemblies, Section 1—Lease Automatic Custody Transfer (LACT) Systems, Second Edition, May 1991; reaffirmed, April 2007, Order No. H30121.
API MPMS, Chapter 6—Metering Assemblies, Section 6—Pipeline Metering Systems, Second Edition, May 1991; reaffirmed, February 2007, Order No. 852–30126.
API MPMS, Chapter 6—Metering Assemblies, Section 7—Metering Viscous Hydrocarbons, Second Edition, May 1991; reaffirmed, April 2007, Order No. 852–30127.
API MPMS, Chapter 7—Temperature Determination, First Edition, June 2001; reaffirmed, March 2007, Product No. H07001.
API MPMS, Chapter 11.2.2–Compressibility Factors for Hydrocarbons: 0.350–0.637 Relative Density (60°F/60°F) and –50°F to 140°F Metering Temperature, Second Edition, October 1986; reaffirmed December 2007, Order No. 852–27307.
API MPMS, Chapter 14—Natural Gas Fluids Measurement; Section 3—Concentric, Square-Edged Orifice Meters; Part 3—Natural Gas Applications; Third Edition, August 1992; Errata March 1994, reaffirmed, February 2009, Product No. H143303.
API MPMS, Chapter 14—Natural Gas Fluids Measurement, Section 8—Liquefied Petroleum Gas Measurement, Second Edition, July 1997; reaffirmed, March 2006, Order No. H14082.
API RP 14C, Recommended Practice for Analysis, Design, Installation, and Testing of Basic Surface Safety Systems for Offshore Production Platforms, Seventh Edition, March 2001; reaffirmed: March 2007, Product No. C14C07.
API RP 14E, Recommended Practice for Design and Installation of Offshore Production Platform Piping Systems, Fifth Edition, October 1991; reaffirmed, March 2007, Order No. 811–07185.
API RP 14FZ, Recommended Practice for Design and Installation of Electrical Systems for Fixed and Floating Offshore Petroleum Facilities for Unclassified and Class I, Zone 0, Zone 1 and Zone 2 Locations, First Edition, September 2001; reaffirmed: March 2007, Product No. G14FZ1.
API RP 14J, Recommended Practice for Design and Hazards Analysis for Offshore Production Facilities, Second Edition, May 2001; reaffirmed: March 2007, Product No. G14J02.
API Standard 2552, USA Standard Method for Measurement and Calibration of Spheres and Spheroids, First Edition, 1966; reaffirmed, October 2007 (ASTM designation: D 1408–65; date of joint API/ASTM approval, 1965).

The purpose of this final rule is to incorporate the revision of some documents previously incorporated by reference into MMS regulations, and to acknowledge the reaffirmation of other documents previously incorporated by reference into MMS regulations.

Procedural Matters

Regulatory Planning and Review (Executive Order (E.O.) 12866)

This final rule is not a significant rule as determined by the Office of Management and Budget (OMB) and is not subject to review under E.O. 12866.

(1) The final rule will not have an annual effect of $100 million or more on the economy. It will not adversely affect in a material way the economy, productivity, competition, jobs, the environment, public health or safety, or State, local, or tribal governments or communities. This final rule will not have any new requirements.

(2) The final rule will not create a serious inconsistency or otherwise interfere with an action taken or planned by another agency.

(3) The final rule will not alter the budgetary effects or entitlements, grants, user fees, or loan programs, or the rights or obligations of their recipients. The changes in this final rule will not impose undue cost on the offshore oil and gas industry.

(4) The final rule will not raise novel legal or policy issues arising out of legal mandates, the President's priorities, or the principles set forth in E.O. 12866.

Regulatory Flexibility Act

The Department of the Interior certifies that this final rule will not have a significant economic effect on a substantial number of small entities under the Regulatory Flexibility Act (5 U.S.C. 601 *et seq.*).

The changes in this final rule will affect lessees and operators of leases and pipeline right-of-way holders on the OCS. This could include about 130 active Federal oil and gas lessees. Small lessees that operate under this rule fall under the Small Business Administration's (SBA) North American Industry Classification System (NAICS) codes 211111, Crude Petroleum and Natural Gas Extraction, and 213111, Drilling Oil and Gas Wells. For these NAICS code classifications, a small company is one with fewer than 500 employees. Based on these criteria, an estimated 70 percent of these companies are considered small. This final rule, therefore will affect a substantial number of small entities. However, the changes in the rule will not have a significant economic effect on a substantial number of small entities because it will not impose new costs or burdens on the offshore oil and gas industry.

Your comments are important. The Small Business and Agriculture Regulatory Enforcement Ombudsman and 10 Regional Fairness boards were established to receive comments from small businesses about Federal agency enforcement actions. The Ombudsman will annually evaluate the enforcement activities and rate each agency's responsiveness to small businesses. If you wish to comment on the actions of MMS, call 1–888–734–3247. You may comment to the Small Business Administration without fear of retaliation. Allegations of discrimination/retaliation filed with the Small Business Administration will be investigated for appropriate action.

Small Business Regulatory Enforcement Fairness Act

The final rule is not a major rule under the Small Business Regulatory Enforcement Fairness Act (5 U.S.C. 801 *et seq.*). This final rule:

a. Will not have an annual effect on the economy of $100 million or more. The only costs will be the purchase of the new API documents and minor

revisions to some operating and maintenance procedures.

b. Will not cause a major increase in costs or prices for consumers, individual industries, Federal, State, or local government agencies, or geographic regions.

c. Will not have significant adverse effects on competition, employment, investment, productivity, innovation, or the ability of U.S.-based enterprises to compete with foreign-based enterprises.

Unfunded Mandates Reform Act

This final rule will not impose an unfunded mandate on State, local, and tribal governments or the private sector of more than $100 million per year. The rule will not have a significant or unique effect on State, local, or tribal governments or the private sector. A statement containing the information required by the Unfunded Mandates Reform Act (2 U.S.C. 1501 *et seq.*) is not required.

Takings Implication Assessment (E.O. 12630)

Under the criteria in E.O. 12630, this final rule does not have significant takings implications. The final rule is not a governmental action capable of interference with constitutionally protected property rights. A Takings Implication Assessment is not required.

Federalism (E.O. 13132)

Under the criteria in E.O. 13132, this final rule does not have federalism implications. This final rule will not substantially and directly affect the relationship between the Federal and State governments. To the extent that State and local governments have a role in OCS activities, this final rule will not affect that role. A Federalism Assessment is not required.

Civil Justice Reform (E.O. 12988)

This rule complies with the requirements of E.O. 12988. Specifically, this rule:

(a) Meets the criteria of section 3(a) requiring that all regulations be reviewed to eliminate errors and ambiguity and be written to minimize litigation; and

(b) Meets the criteria of section 3(b)(2) requiring that all regulations be written in clear language and contain clear legal standards.

Consultation With Indian Tribes (Executive Order 13175)

Under the criteria in E.O. 13175, we have evaluated this rule and determined that it has no substantial effects on federally recognized Indian tribes.

Paperwork Reduction Act (PRA) of 1995

This rulemaking does not contain any information collection requirements and does not require a submission to Office of Management and Budget for review and approval subject to the Paperwork Reduction Act of 1995 (44 U.S.C. 3501 *et seq.*).

National Environmental Policy Act (NEPA) of 1969

This rule does not constitute a major Federal action significantly affecting the quality of the human environment. A detailed statement under the NEPA of 1969 is not required because the rule is covered by a categorical exclusion. The MMS has analyzed this rule under the criteria of the NEPA and 516 Departmental Manual Chapter 15.4.C(1). We have also determined that the rule does not involve any of the extraordinary circumstances listed in 43 CFR 42.215 that would require further analysis under the NEPA.

Data Quality Act

In developing this rule, we did not conduct or use a study, experiment, or survey requiring peer review under the Data Quality Act (Pub. L. 106–554, app. C § 515, 114 Stat. 2763, 2763A–153–154).

Effects on the Energy Supply (E.O. 13211)

This rule is not a significant energy action under the definition in E.O. 13211. A Statement of Energy Effects is not required.

List of Subjects in 30 CFR Part 250

Continental shelf, Incorporation by reference, Oil and gas exploration, Pipelines, Public lands—mineral resources, Reporting and recordkeeping requirements.

Dated: March 11, 2010.

Ned Farquhar,

Deputy Assistant Secretary—Land and Minerals Management.

■ For the reasons stated in the preamble, Minerals Management Service (MMS) is amending 30 CFR part 250 as follows:

PART 250—OIL AND GAS AND SULPHUR OPERATIONS IN THE OUTER CONTINENTAL SHELF

■ 1. The authority citation for part 250 continues to read as follows:

Authority: 31 U.S.C. 9701, 43 U.S.C. 1334.

■ 2. Revise § 250.198 to read as follows:

§ 250.198 Documents incorporated by reference.

(a) The MMS is incorporating by reference the documents listed in paragraphs (e) through (k) of this section. Paragraphs (e) through (k) identify the publishing organization of the documents, the address and phone number where you may obtain these documents, and the documents incorporated by reference. The Director of the Federal Register has approved the incorporations by reference according to 5 U.S.C. 552(a) and 1 CFR part 51.

(1) Incorporation by reference of a document is limited to the edition of the publication that is cited in this section. Future amendments or revisions of the document are not included. The MMS will publish any changes to a document in the **Federal Register** and amend this section.

(2) The MMS may make the rule amending the document effective without prior opportunity for public comment when MMS determines:

(i) That the revisions to a document result in safety improvements or represent new industry standard technology and do not impose undue costs on the affected parties; and

(ii) The MMS meets the requirements for making a rule immediately effective under 5 U.S.C. 553.

(b) The MMS incorporated each document or specific portion by reference in the sections noted. The entire document is incorporated by reference, unless the text of the corresponding sections in this part calls for compliance with specific portions of the listed documents. In each instance, the applicable document is the specific edition or specific edition and supplement or addendum cited in this section.

(c) Under §§ 250.141 and 250.142, you may comply with a later edition of a specific document incorporated by reference, provided:

(1) You show that complying with the later edition provides a degree of protection, safety, or performance equal to or better than would be achieved by compliance with the listed edition; and

(2) You obtain the prior written approval for alternative compliance from the authorized MMS official.

(d) You may inspect these documents at the Minerals Management Service, 381 Elden Street, Room 3313, Herndon, Virginia 20170; phone: 703–787–1587; or at the National Archives and Records Administration (NARA). For information on the availability of this material at NARA, call 202–741–6030, or go to: *http://www.archives.gov/federal_register/code_of_federal_regulations/ibr_locations.html.*

(e) American Concrete Institute (ACI), ACI Standards, P. O. Box 9094, Farmington Hill, MI 48333–9094:

http://www.concrete.org; phone: 248–848–3700:

(1) ACI Standard 318–95, Building Code Requirements for Reinforced Concrete (ACI 318–95) and Commentary (ACI 318R–95), incorporated by reference at § 250.901(a), (d).

(2) ACI 357R–84, Guide for the Design and Construction of Fixed Offshore Concrete Structures, 1984; reapproved 1997, incorporated by reference at § 250.901(a), (d).

(f) American Institute of Steel Construction, Inc. (AISC), AISC Standards, One East Wacker Drive, Suite 700, Chicago, IL 60601–1802; *http://www.aisc.org;* phone: 312–670–2400:

(1) ANSI/AISC 360–05, Specification for Structural Steel Buildings incorporated by reference at § 250.901(a), (d).

(2) [Reserved]

(g) American National Standards Institute (ANSI), ANSI/ASME Codes, ATTN: Sales Department, 25 West 43rd Street, 4th Floor, New York, NY 10036; *http://www.ansi.org;* phone: 212–642–4900; and/or American Society of Mechanical Engineers (ASME), 22 Law Drive, P.O. Box 2900, Fairfield, NJ 07007–2900; *http://www.asme.org;* phone: 973–882–5155:

(1) ANSI/ASME Boiler and Pressure Vessel Code, Section I, Rules for Construction of Power Boilers; including Appendices, 2004 Edition; and July 1, 2005 Addenda, and all Section I Interpretations Volume 55, incorporated by reference at § 250.803(b)(1), (b)(1)(i); and § 250.1629(b)(1), (b)(1)(i);

(2) ANSI/ASME Boiler and Pressure Vessel Code, Section IV, Rules for Construction of Heating Boilers; including Appendices 1, 2, 3, 5, 6, and Non-mandatory Appendices B, C, D, E, F, H, I, K, L, and M, and the Guide to Manufacturers Data Report Forms, 2004 Edition; July 1, 2005 Addenda, and all Section IV Interpretations Volume 55, incorporated by reference at § 250.803(b)(1), (b)(1)(i); and § 250.1629(b)(1), (b)(1)(i);

(3) ANSI/ASME Boiler and Pressure Vessel Code, Section VIII, Rules for Construction of Pressure Vessels; Divisions 1 and 2, 2004 Edition; July 1, 2005 Addenda, Divisions 1 and 2, and all Section VIII Interpretations Volumes 54 and 55, incorporated by reference at § 250.803(b)(1), (b)(1)(i); and § 250.1629(b)(1), (b)(1)(i);

(4) ANSI/ASME B 16.5–2003, Pipe Flanges and Flanged Fittings incorporated by reference at § 250.1002(b)(2);

(5) ANSI/ASME B 31.8–2003, Gas Transmission and Distribution Piping Systems incorporated by reference at § 250.1002(a);

(6) ANSI/ASME SPPE–1–1994 and SPPE–1d–1996 Addenda, Quality Assurance and Certification of Safety and Pollution Prevention Equipment Used in Offshore Oil and Gas Operations, incorporated by reference at § 250.806(a)(2)(i);

(7) ANSI Z88.2–1992, American National Standard for Respiratory Protection, incorporated by reference at, § 250.490(g)(4)(iv), (j)(13)(ii).

(h) American Petroleum Institute (API), API Recommended Practices (RP), Specs, Standards, Manual of Petroleum Measurement Standards (MPMS) chapters, 1220 L Street, NW., Washington, DC 20005–4070; *http://www.api.org;* phone: 202–682–8000:

(1) API 510, Pressure Vessel Inspection Code: In-Service Inspection, Rating, Repair, and Alteration, Downstream Segment, Ninth Edition, June 2006, Product No. C51009; incorporated by reference at § 250.803(b)(1); and § 250.1629(b)(1);

(2) API Bulletin 2INT–DG, Interim Guidance for Design of Offshore Structures for Hurricane Conditions, May 2007, Product No. G2DGINT; incorporated by reference at § 250.901(a), (d);

(3) API Bulletin 2INT–EX, Interim Guidance for Assessment of Existing Offshore Structures for Hurricane Conditions, May 2007, Product No. G2EXINT; incorporated by reference at § 250.901(a), (d);

(4) API Bulletin 2INT–MET, Interim Guidance on Hurricane Conditions in the Gulf of Mexico, May 2007, Product No. G2INTMET; incorporated by reference at § 250.901(a), (d);

(5) API MPMS, Chapter 1—Vocabulary, Second Edition, July 1994, Order No. 852–01002; incorporated by reference at § 250.1201;

(6) API MPMS, Chapter 2—Tank Calibration, Section 2A—Measurement and Calibration of Upright Cylindrical Tanks by the Manual Tank Strapping Method, First Edition, February 1995; reaffirmed February 2007, Order No. 852–022A1; incorporated by reference at § 250.1202(l)(4);

(7) API MPMS, Chapter 2—Tank Calibration, Section 2B—Calibration of Upright Cylindrical Tanks Using the Optical Reference Line Method, First Edition, March 1989; reaffirmed, December 2007, Order No. H30023; incorporated by reference at § 250.1202(l)(4);

(8) API MPMS, Chapter 3—Tank Gauging, Section 1A—Standard Practice for the Manual Gauging of Petroleum and Petroleum Products, Second Edition, August 2005, Product No. H301A02; incorporated by reference at § 250.1202(l)(4);

(9) API MPMS, Chapter 3—Tank Gauging, Section 1B—Standard Practice for Level Measurement of Liquid Hydrocarbons in Stationary Tanks by Automatic Tank Gauging, Second Edition, June 2001, reaffirmed, October 2006, Product No. H301B2; incorporated by reference at § 250.1202(l)(4);

(10) API MPMS, Chapter 4—Proving Systems, Section 1—Introduction, Third Edition, February 2005, Product No. H04013; incorporated by reference at § 250.1202(a)(3), (f)(1);

(11) API MPMS, Chapter 4—Proving Systems, Section 2—Displacement Provers, Third Edition, September 2003, Product No. H04023; incorporated by reference at § 250.1202(a)(3), (f)(1);

(12) API MPMS, Chapter 4—Proving Systems, Section 4—Tank Provers, Second Edition, May 1998, reaffirmed November 2005, Order No. H04042; incorporated by reference at § 250.1202(a)(3), (f)(1);

(13) API MPMS, Chapter 4—Proving Systems, Section 5—Master-Meter Provers, Second Edition, May 2000, reaffirmed: August 2005, Order No. H04052; incorporated by reference at § 250.1202(a)(3), (f)(1);

(14) API MPMS, Chapter 4—Proving Systems, Section 6—Pulse Interpolation, Second Edition, May 1999; reaffirmed 2003, Order No. H04062; incorporated by reference at § 250.1202(a)(3), (f)(1);

(15) API MPMS, Chapter 4—Proving Systems, Section 7—Field Standard Test Measures, Second Edition, December 1998; reaffirmed 2003, Order No. H04072; incorporated by reference at § 250.1202(a)(3), (f)(1);

(16) API MPMS, Chapter 5—Metering, Section 1—General Considerations for Measurement by Meters, Fourth Edition, September 2005, Product No. H05014; incorporated by reference at § 250.1202(a)(3);

(17) API MPMS, Chapter 5—Metering, Section 2—Measurement of Liquid Hydrocarbons by Displacement Meters, Third Edition, September 2005, Product No. H05023; incorporated by reference at § 250.1202(a)(3);

(18) API MPMS Chapter 5—Metering, Section 3—Measurement of Liquid Hydrocarbons by Turbine Meters, Fifth Edition, September 2005, Product No. H05035; incorporated by reference at § 250.1202(a)(3);

(19) API MPMS, Chapter 5—Metering, Section 4—Accessory Equipment for Liquid Meters, Fourth Edition, September 2005, Product No. H05044; incorporated by reference at § 250.1202(a)(3);

(20) API MPMS, Chapter 5—Metering, Section 5—Fidelity and Security of

Flow Measurement Pulsed-Data Transmission Systems, Second Edition, August 2005, Product No. H50502; incorporated by reference at § 250.1202(a)(3);

(21) API MPMS, Chapter 6—Metering Assemblies, Section 1—Lease Automatic Custody Transfer (LACT) Systems, Second Edition, May 1991; reaffirmed, April 2007, Order No. H30121; incorporated by reference at § 250.1202(a)(3);

(22) API MPMS, Chapter 6—Metering Assemblies, Section 6—Pipeline Metering Systems, Second Edition, May 1991; reaffirmed, February 2007, Order No. 852–30126; incorporated by reference at § 250.1202(a)(3);

(23) API MPMS, Chapter 6—Metering Assemblies, Section 7—Metering Viscous Hydrocarbons, Second Edition, May 1991; reaffirmed, April 2007, Order No. 852–30127; incorporated by reference at § 250.1202(a)(3);

(24) API MPMS, Chapter 7—Temperature Determination, First Edition, June 2001; reaffirmed, March 2007; Product No. H07001; incorporated by reference at § 250.1202(a)(3), (l)(4);

(25) API MPMS, Chapter 8—Sampling, Section 1—Standard Practice for Manual Sampling of Petroleum and Petroleum Products, Third Edition, October 1995; reaffirmed, March 2006, Order No. H08013; incorporated by reference at § 250.1202(b)(4)(i), (l)(4);

(26) API MPMS, Chapter 8—Sampling, Section 2—Standard Practice for Automatic Sampling of Liquid Petroleum and Petroleum Products, Second Edition, October 1995; reaffirmed, June 2005, Order No. H08022; incorporated by reference at § 250.1202(a)(3), (l)(4);

(27) API MPMS, Chapter 9—Density Determination, Section 1—Standard Test Method for Density, Relative Density (Specific Gravity), or API Gravity of Crude Petroleum and Liquid Petroleum Products by Hydrometer Method, Second Edition, December 2002; reaffirmed October 2005, Product No. H09012; incorporated by reference at § 250.1202(a)(3), (l)(4);

(28) API MPMS, Chapter 9—Density Determination, Section 2—Standard Test Method for Density or Relative Density of Light Hydrocarbons by Pressure Hydrometer, Second Edition, March 2003, Product No. H09022; incorporated by reference at § 250.1202(a)(3), (l)(4);

(29) API MPMS, Chapter 10—Sediment and Water, Section 1—Standard Test Method for Sediment in Crude Oils and Fuel Oils by the Extraction Method, Third Edition, November 2007, Product No. H10013; incorporated by reference at § 250.1202(a)(3), (l)(4);

(30) API MPMS, Chapter 10—Sediment and Water, Section 2—Standard Test Method for Water in Crude Oil by Distillation, Second Edition, November 2007, Product No. H10022; incorporated by reference at § 250.1202(a)(3), (l)(4);

(31) API MPMS, Chapter 10—Sediment and Water, Section 3—Standard Test Method for Water and Sediment in Crude Oil by the Centrifuge Method (Laboratory Procedure), Third Edition, May 2008, Product No. H10033; incorporated by reference at § 250.1202(a)(3), (l)(4);

(32) API MPMS, Chapter 10—Sediment and Water, Section 4—Determination of Water and/or Sediment in Crude Oil by the Centrifuge Method (Field Procedure), Third Edition, December 1999, Order No. H10043; incorporated by reference at § 250.1202(a)(3), (l)(4);

(33) API MPMS, Chapter 10—Sediment and Water, Section 9—Standard Test Method for Water in Crude Oils by Coulometric Karl Fischer Titration, Second Edition, December 2002; reaffirmed 2005, Product No. H10092; incorporated by reference at § 250.1202(a)(3), (l)(4);

(34) API MPMS, Chapter 11.1—Volume Correction Factors, Volume 1, Table 5A—Generalized Crude Oils and JP–4 Correction of Observed API Gravity to API Gravity at 60 °F, and Table 6A—Generalized Crude Oils and JP–4 Correction of Volume to 60 °F Against API Gravity at 60 °F, API Standard 2540, First Edition, August 1980; reaffirmed March 1997, API Stock No. H27000; incorporated by reference at § 250.1202(a)(3), (g)(3), (l)(4);

(35) API MPMS, Chapter 11.2.2—Compressibility Factors for Hydrocarbons: 0.350–0.637 Relative Density (60 °F/60 °F) and −50 °F to 140 °F Metering Temperature, Second Edition, October 1986; reaffirmed: December 2007, Order No. 852–27307; incorporated by reference at § 250.1202(a)(3), (g)(4);

(36) API MPMS, Chapter 11—Physical Properties Data, Addendum to Section 2, Part 2—Compressibility Factors for Hydrocarbons, Correlation of Vapor Pressure for Commercial Natural Gas Liquids, First Edition, December 1994; reaffirmed, December 2002, Order No. H27308; incorporated by reference at § 250.1202(a)(3);

(37) API MPMS, Chapter 12—Calculation of Petroleum Quantities, Section 2—Calculation of Petroleum Quantities Using Dynamic Measurement Methods and Volumetric Correction Factors, Part 1—Introduction, Second Edition, May 1995; reaffirmed March 2002, Order No. H12021; incorporated by reference at § 250.1202(a)(3), (g)(1), (g)(2);

(38) API MPMS, Chapter 12—Calculation of Petroleum Quantities, Section 2—Calculation of Petroleum Quantities Using Dynamic Measurement Methods and Volumetric Correction Factors, Part 2—Measurement Tickets, Third Edition, June 2003, Product No. H12223; incorporated by reference at § 250.1202(a)(3), (g)(1), (g)(2);

(39) API MPMS, Chapter 14—Natural Gas Fluids Measurement, Section 3—Concentric, Square-Edged Orifice Meters, Part 1—General Equations and Uncertainty Guidelines, Third Edition, September 1990; reaffirmed January 2003, Order No. 852–30350; incorporated by reference at § 250.1203(b)(2);

(40) API MPMS, Chapter 14—Natural Gas Fluids Measurement, Section 3—Concentric, Square-Edged Orifice Meters, Part 2—Specification and Installation Requirements, Fourth Edition, April 2000; reaffirmed March 2006, Order No. H14324; incorporated by reference at § 250.1203(b)(2);

(41) API MPMS, Chapter 14—Natural Gas Fluids Measurement, Section 3—Concentric, Square-Edged Orifice Meters; Part 3—Natural Gas Applications; Third Edition, August 1992; Errata March 1994, reaffirmed, February 2009, Product No. H143303; incorporated by reference at § 250.1203(b)(2);

(42) API MPMS, Chapter 14.5/GPA Standard 2172–09; Calculation of Gross Heating Value, Relative Density, Compressibility and Theoretical Hydrocarbon Liquid Content for Natural Gas Mixtures for Custody Transfer; Third Edition, January 2009; Adopted as Tentative Standard, 1972; Revised and Adopted as Standard, 1976; Revised 1984, 1986, 1996, 2009; Product No. H140503; incorporated by reference at § 250.1203(b)(2);

(43) API MPMS, Chapter 14—Natural Gas Fluids Measurement, Section 6—Continuous Density Measurement, Second Edition, April 1991; reaffirmed, February 2006, Order No. H30346; incorporated by reference at § 250.1203(b)(2);

(44) API MPMS, Chapter 14—Natural Gas Fluids Measurement, Section 8—Liquefied Petroleum Gas Measurement, Second Edition, July 1997; reaffirmed, March 2006, Order No. H14082; incorporated by reference at § 250.1203(b)(2);

(45) API MPMS, Chapter 20—Section 1—Allocation Measurement, First Edition, September 1993; reaffirmed October 2006, Order No. 852–30701;

incorporated by reference at § 250.1202(k)(1);

(46) API MPMS, Chapter 21—Flow Measurement Using Electronic Metering Systems, Section 1—Electronic Gas Measurement, First Edition, August 1993; reaffirmed, July 2005, Order No. 852–30730; incorporated by reference at § 250.1203(b)(4);

(47) API RP 2A–WSD, Recommended Practice for Planning, Designing and Constructing Fixed Offshore Platforms—Working Stress Design, Twenty-first Edition, December 2000; Errata and Supplement 1, December 2002; Errata and Supplement 2, September 2005; Errata and Supplement 3, October 2007; Product No. G2AWSD; incorporated by reference at § 250.901(a), (d); § 250.908(a); § 250.919(b)(2); § 250.920(a), (b), (c), (d), (e), (f);

(48) API RP 2D, Operation and Maintenance of Offshore Cranes, Sixth Edition, May 2007, Product No. G02D06; incorporated by reference at § 250.108(a);

(49) API RP 2FPS, RP for Planning, Designing, and Constructing Floating Production Systems; First Edition, March 2001, Order No. G2FPS1; incorporated by reference at § 250.901(a), (d);

(50) API RP 2I, In-Service Inspection of Mooring Hardware for Floating Structures; Third Edition, April 2008, Product No. G02I03; incorporated by reference at § 250.901(a), (d);

(51) API RP 2RD, Recommended Practice for Design of Risers for Floating Production Systems (FPSs) and Tension-Leg Platforms (TLPs), First Edition, June 1998; reaffirmed, May 2006, Errata, June 2009; Order No. G02RD1; incorporated by reference at § 250.800(b)(2); § 250.901(a), (d); § 250.1002(b)(5);

(52) API RP 2SK, Design and Analysis of Stationkeeping Systems for Floating Structures, Third Edition, October 2005, Addendum, May 2008, Product No. G2SK03; incorporated by reference at § 250.800(b)(3); § 250.901(a), (d);

(53) API RP 2SM, Recommended Practice for Design, Manufacture, Installation, and Maintenance of Synthetic Fiber Ropes for Offshore Mooring, First Edition, March 2001, Addendum, May 2007, Product No. G02SM1; incorporated by reference at § 250.901(a), (d);

(54) API RP 2T, Recommended Practice for Planning, Designing, and Constructing Tension Leg Platforms, Second Edition, August 1997, Order No. G02T02; incorporated by reference at § 250.901(a), (d);

(55) API RP 14B, Recommended Practice for Design, Installation, Repair and Operation of Subsurface Safety Valve Systems, Fifth Edition, October 2005, also available as ISO 10417: 2004, (Identical) Petroleum and natural gas industries—Subsurface safety valve systems—Design, installation, operation and redress, Product No. GX14B05; incorporated by reference at § 250.801(e)(4); § 250.804(a)(1)(i);

(56) API RP 14C, Recommended Practice for Analysis, Design, Installation, and Testing of Basic Surface Safety Systems for Offshore Production Platforms, Seventh Edition, March 2001, reaffirmed: March 2007; Product No. C14C07; incorporated by reference at § 250.125(a); § 250.292(j); § 250.802(b), (e)(2); § 250.803(a), (b)(2)(i), (b)(4), (b)(5)(i), (b)(7), (b)(9)(v), (c)(2); § 250.804(a), (a)(6); § 250.1002(d); § 250.1004(b)(9); § 250.1628(c), (d)(2); § 250.1629(b)(2), (b)(4)(v); § 250.1630(a);

(57) API RP 14E, Recommended Practice for Design and Installation of Offshore Production Platform Piping Systems, Fifth Edition, October 1991; reaffirmed, March 2007, Order No. 811–07185; incorporated by reference at § 250.802(e)(3); § 250.1628(b)(2), (d)(3);

(58) API RP 14F, Design, Installation, and Maintenance of Electrical Systems for Fixed and Floating Offshore Petroleum Facilities for Unclassified and Class I, Division 1 and Division 2 Locations, Fifth Edition, July 2008, Product No. G14F05; incorporated by reference at § 250.114(c); § 250.803(b)(9)(v); § 250.1629(b)(4)(v);

(59) API RP 14FZ, Recommended Practice for Design and Installation of Electrical Systems for Fixed and Floating Offshore Petroleum Facilities for Unclassified and Class I, Zone 0, Zone 1 and Zone 2 Locations, First Edition, September 2001, reaffirmed: March 2007; Product No. G14FZ1; incorporated by reference at § 250.114(c); § 250.803(b)(9)(v); § 250.1629(b)(4)(v);

(60) API RP 14G, Recommended Practice for Fire Prevention and Control on Fixed Open-type Offshore Production Platforms, Fourth Edition, April 2007; Product No. G14G04; incorporated by reference at § 250.803(b)(8), (b)(9)(v); § 250.1629(b)(3), (b)(4)(v);

(61) API RP 14H, Recommended Practice for Installation, Maintenance and Repair of Surface Safety Valves and Underwater Safety Valves Offshore, Fifth Edition, August 2007, Product No. G14H05; incorporated by reference at § 250.802(d); § 250.804(a)(5);

(62) API RP 14J, Recommended Practice for Design and Hazards Analysis for Offshore Production Facilities, Second Edition, May 2001; reaffirmed: March 2007; Product No. G14J02; incorporated by reference at § 250.800(b)(1); § 250.901(a)(14);

(63) API RP 53, Recommended Practices for Blowout Prevention Equipment Systems for Drilling Wells, Third Edition, March 1997; reaffirmed September 2004, Order No. G53003; incorporated by reference at § 250.442(c); § 250.446(a);

(64) API RP 65, Recommended Practice for Cementing Shallow Water Flow Zones in Deepwater Wells, First Edition, September 2002, Product No. G56001; incorporated by reference at § 250.415(e);

(65) API RP 500, Recommended Practice for Classification of Locations for Electrical Installations at Petroleum Facilities Classified as Class I, Division 1 and Division 2, Second Edition, November 1997; reaffirmed November 2002, Product No. C50002; incorporated by reference at § 250.114(a); § 250.459; § 250.802(e)(4)(i); § 250.803(b)(9)(i); § 250.1628(b)(3), (d)(4)(i); § 250.1629(b)(4)(i);

(66) API RP 505, Recommended Practice for Classification of Locations for Electrical Installations at Petroleum Facilities Classified as Class I, Zone 0, Zone 1, and Zone 2, First Edition, November 1997; reaffirmed November 2002, Order No. C50501; incorporated by reference at § 250.114(a); § 250.459; § 250.802(e)(4)(i); § 250.803(b)(9)(i); § 250.1628(b)(3), (d)(4)(i); § 250.1629(b)(4)(i);

(67) API RP 2556, Recommended Practice for Correcting Gauge Tables for Incrustation, Second Edition, August 1993; reaffirmed November 2003, Order No. H25560; incorporated by reference at § 250.1202(l)(4);

(68) ANSI/API Spec. Q1, Specification for Quality Programs for the Petroleum, Petrochemical and Natural Gas Industry, ISO TS 29001:2007 (Identical), Petroleum, petrochemical and natural gas industries—Sector specific requirements—Requirements for product and service supply organizations, Eighth Edition, December 2007, Effective Date: June 15, 2008, Product No. GXQ108; incorporated by reference at § 250.806(a)(2)(ii);

(69) API Spec. 2C, Specification for Offshore Pedestal Mounted Cranes, Sixth Edition, March 2004, Effective Date: September 2004, Product No. G02C06; incorporated by reference at § 250.108(c), (d);

(70) ANSI/API Spec. 6A, Specification for Wellhead and Christmas Tree Equipment, Nineteenth Edition, July 2004; Effective Date: February 1, 2005; Contains API Monogram Annex as Part of U.S. National Adoption; ISO 10423:2003 (Modified), Petroleum and natural gas industries—Drilling and

production equipment—Wellhead and Christmas tree equipment; Errata 1, September 2004, Errata 2, April 2005, Errata 3, June 2006, Errata 4, August 2007, Errata 5, May 2009; Addendum 1, February 2008; Addendum 2, 3, and 4, December 2008; Product No. GX06A19; incorporated by reference at § 250.806(a)(3); § 250.1002(b)(1), (b)(2);

(71) API Spec. 6AV1, Specification for Verification Test of Wellhead Surface Safety Valves and Underwater Safety Valves for Offshore Service, First Edition, February 1, 1996; reaffirmed January 2003, Order No. G06AV1; incorporated by reference at § 250.806(a)(3);

(72) ANSI/API Spec. 6D, Specification for Pipeline Valves, Twenty-third Edition, April 2008; Effective Date: October 1, 2008, Errata 1, June 2008; Errata 2, November 2008; Errata 3, February 2009; Addendum 1, October 2009; Contains API Monogram Annex as Part of U.S. National Adoption; ISO 14313:2007 (Identical), Petroleum and natural gas industries—Pipeline transportation systems—Pipeline valves; Product No. GX6D23; incorporated by reference at § 250.1002(b)(1);

(73) ANSI/API Spec. 14A, Specification for Subsurface Safety Valve Equipment, Eleventh Edition, October 2005, Effective Date: May 1, 2006; also available as ISO 10432:2004, Product No. GX14A11; incorporated by reference at § 250.806(a)(3);

(74) ANSI/API Spec. 17J, Specification for Unbonded Flexible Pipe, Third Edition, July 2008; Effective Date: January 1, 2009, Contains API Monogram Annex as Part of U.S. National Adoption; ISO 13628–2:2006 (Identical), Petroleum and natural gas industries—Design and operation of subsea production systems—Part 2: Unbonded flexible pipe systems for subsea and marine application; Product No. GX17J03; incorporated by reference at § 250.803(b)(2)(iii); § 250.1002(b)(4); § 250.1007(a)(4);

(75) API Standard 2551, Measurement and Calibration of Horizontal Tanks, First Edition, 1965; reaffirmed March 2002, API Stock No. H25510; incorporated by reference at § 250.1202(l)(4);

(76) API Standard 2552, USA Standard Method for Measurement and Calibration of Spheres and Spheroids, First Edition, 1966; reaffirmed, October 2007 (ASTM designation: D 1408–65; date of joint API/ASTM approval, 1965); incorporated by reference at § 250.1202(l)(4);

(77) API Standard 2555, Method for Liquid Calibration of Tanks, First Edition, September 1966; reaffirmed March 2002; Order No. 852–25550; incorporated by reference at § 250.1202(l)(4).

(i) American Society for Testing and Materials (ASTM), ASTM Standards, 100 Bar Harbor Drive, P. O. Box C700, West Conshohocken, PA 19428–2959; *http://www.astm.org;* phone: 610–832–9500:

(1) ASTM Standard C 33–07, approved December 15, 2007, Standard Specification for Concrete Aggregates; incorporated by reference at § 250.901(a), (d);

(2) ASTM Standard C 94/C 94M–07, approved January 1, 2007, Standard Specification for Ready-Mixed Concrete; incorporated by reference at § 250.901(a), (d);

(3) ASTM Standard C 150–07, approved May 1, 2007, Standard Specification for Portland Cement; incorporated by reference at § 250.901(a), (d);

(4) ASTM Standard C 330–05, approved December 15, 2005, Standard Specification for Lightweight Aggregates for Structural Concrete; incorporated by reference at § 250.901(a), (d);

(5) ASTM Standard C 595–08, approved January 1, 2008, Standard Specification for Blended Hydraulic Cements; incorporated by reference at § 250.901(a), (d);

(j) American Welding Society (AWS), AWS Codes, 550 NW, LeJeune Road, Miami, FL 33126; *http://www.aws.org*; phone: 800–443–9353:

(1) AWS D1.1:2000, Structural Welding Code—Steel; incorporated by reference at § 250.901(a), (d);

(2) AWS D1.4–98, Structural Welding Code—Reinforcing Steel; incorporated by reference at § 250.901(a), (d);

(3) AWS D3.6M:1999, Specification for Underwater Welding; incorporated by reference at § 250.901(a), (d).

(k) National Association of Corrosion Engineers (NACE), NACE Standards, 1440 South Creek Drive, Houston, TX 77084; *http://www.nace.org*; phone: 281–228–6200:

(1) NACE Standard MR0175–2003, Item No. 21302, Standard Material Requirements, Metals for Sulfide Stress Cracking and Stress Corrosion Cracking Resistance in Sour Oilfield Environments; incorporated by reference at § 250.901(a), § 250.490(p)(2);

(2) NACE Standard RP0176–2003, Item No. 21018, Standard Recommended Practice, Corrosion Control of Steel Fixed Offshore Structures Associated with Petroleum Production; incorporated by reference at § 250.901(a), (d).

■ 3. Amend § 250.803(b)(1) introductory text by revising the last sentence to read as follows:

§ 250.803 Additional production system requirements.

* * * * *

(b) * * *

(1) * * * Pressure and fired vessels must have maintenance inspection, rating, repair, and alteration performed in accordance with the applicable provisions of API Pressure Vessel Inspections Code: In-Service Inspection, Rating, Repair, and Alteration, API 510 (except Sections 5.8 and 9.5) (incorporated by reference as specified in § 250.198).

* * * * *

■ 4. Amend § 250.806 by revising paragraph (a)(2)(i) to read as follows:

§ 250.806 Safety and pollution prevention equipment quality assurance requirements.

(a) * * *

(2) * * *

(i) ANSI/ASME SPPE–1–1994 and SPPE–1d–1996 Addenda, Quality Assurance and Certification of Safety and Pollution Prevention Equipment Used in Offshore Oil and Gas Operations; and

* * * * *

■ 5. Amend § 250.901 by:

■ A. Revising paragraph (a)(1) and (a)(2);

■ B. Revising (a)(15) through (a)(19), and

■ C. Revising paragraphs (d)(1), (d)(7) through (d)(11), and (d)(16) in the table to read as follows:

§ 250.901 What industry standards must your platform meet?

* * * * *

(a) * * *

(1) ACI Standard 318–95, Building Code Requirements for Reinforced Concrete (ACI 318–95) and Commentary (ACI 318R–95) (incorporated by reference at § 250.198);

(2) ACI 357R–84, Guide for the Design and Construction of Fixed Offshore Concrete Structures, 1984; reapproved 1997 (incorporated by reference at § 250.198);

* * * * *

(15) American Society for Testing and Materials (ASTM) Standard C 33–07, approved December 15, 2007, Standard Specification for Concrete Aggregates (incorporated by reference as specified in § 250.198);

(16) ASTM Standard C 94/C 94M–07, approved January 1, 2007, Standard Specification for Ready-Mixed Concrete (incorporated by reference as specified in § 250.198);

(17) ASTM Standard C 150–07, approved May 1, 2007, Standard Specification for Portland Cement (incorporated by reference as specified in § 250.198);

(18) ASTM Standard C 330–05, approved December 15, 2005, Standard Specification for Lightweight Aggregates for Structural Concrete (incorporated by reference as specified in § 250.198);

(19) ASTM Standard C 595–08, approved January 1, 2008, Standard Specification for Blended Hydraulic Cements (incorporated by reference as specified in § 250.198);

* * * * *

(d) * * *

Industry standard	Applicable to:
* * * * * * *	
(1) ACI Standard 318–95, Building Code Requirements for Reinforced Concrete (ACI 318–95) and Commentary (ACI 318R–95).	Fixed and floating platform, as appropriate.
* * * * * * *	
(7) ASTM Standard C 33–07, approved December 15, 2007, Standard Specification for Concrete Aggregates; (8) ASTM Standard C 94/C 94M–07, approved January 1, 2007, Standard Specification for Ready-Mixed Concrete; (9) ASTM Standard C 150–07, approved May 1, 2007, Standard Specification for Portland Cement; (10) ASTM Standard C 330–05, approved December 15, 2005, Standard Specification for Lightweight Aggregates for Structural Concrete; (11) ASTM Standard C 595–08, approved January 1, 2008, Standard Specification for Blended Hydraulic Cements;	
* * * * * * *	
(16) ACI 357R–84, Guide for the Design and Construction of Fixed Offshore Concrete Structures, 1984; reapproved 1997	Fixed platforms
* * * * * * *	

■ 6. Amend § 250.1628 by revising paragraphs (b)(3) and (d)(4)(i) to read as follows:

§ 250.1628 Design, installation, and operation of production systems.

* * * * *

(b) * * *

(3) Electrical system information including a plan of each platform deck, outlining all hazardous areas classified according to API RP 500, Recommended Practice for Classification of Locations for Electrical Installations at Petroleum Facilities Classified as Class I, Division 1 and Division 2, or API RP 505, Recommended Practice for Classification of Locations for Electrical Installations at Petroleum Facilities Classified as Class I, Zone 0, Zone 1, and Zone 2 (incorporated by reference as specified in § 250.198), and outlining areas in which potential ignition sources are to be installed;

* * * * *

(d) * * *

(4) * * *

(i) A plan of each platform deck, outlining all hazardous areas classified according to API RP 500, Recommended Practice for Classification of Locations for Electrical Installations at Petroleum Facilities Classified as Class I, Division 1 and Divisions 2, or API RP 505, Recommended Practice for Classification of Locations for Electrical Installations at Petroleum Facilities Classified as Class I, Zone 0, Zone 1, and Zone 2 (incorporated by reference as specified in § 250.198), and outlining areas in which potential ignition sources are to be installed;

* * * * *

■ 7. Amend § 250.1629 by:

■ A. Revising the last sentence of paragraph (b)(1) introductory text;

■ B. Revising paragraph (b)(3) introductory text; and

■ C. Revising the last sentence of paragraph (b)(4)(i).

The revisoins read as follows:

§ 250.1629 Additional production and fuel gas system requirements.

* * * * *

(b) * * *

(1) * * * Pressure and fired vessels must have maintenance inspection, rating, repair, and alteration performed in accordance with the applicable provisions of API Pressure Vessel Inspections Code: In-Service Inspection, Rating, Repair, and Alteration, API 510 (except Sections 5.8 and 9.5) (incorporated by reference as specified in § 250.198).

* * * * *

(3) *Firefighting systems.* Firefighting systems must conform to subsection 5.2, Fire Water Systems, of API RP 14G, Recommended Practice for Fire Prevention and Control on Open Type Offshore Production Platforms (incorporated by reference as specified in § 250.198), and must be subject to the approval of the District Manager. Additional requirements must apply as follows:

* * * * *

(4) * * *

(i) * * * A classified area is any area classified Class I, Group D, Division 1 or 2, following the guidelines of API RP 500 (incorporated by reference as specified in § 205.198), or any area classified Class I, Zone 0, Zone 1, or Zone 2, following the guidelines of API RP 505 (incorporated by reference as specified in § 205.198).

* * * * *

[FR Doc. 2010–9612 Filed 4–27–10; 8:45 am]

BILLING CODE 4310–MR–P

DEPARTMENT OF HOMELAND SECURITY

Coast Guard

33 CFR Part 117

[Docket Number USCG–2010–0299]

Drawbridge Operation Regulations; Upper Mississippi River, Rock Island, IL

AGENCY: Coast Guard, DHS.

ACTION: Notice of temporary deviation from regulations.

SUMMARY: The Commander, Eighth Coast Guard District, has issued a temporary deviation from the regulation governing the operation of the Rock Island Railroad and Highway Drawbridge across the Upper Mississippi River, Mile 482.9, Rock Island, Illinois. The deviation is necessary to allow the Quad Cities Marathon to cross the bridge. This deviation allows the bridge to be maintained in the closed to navigation position for four hours from 7:30 a.m. to 11:30 a.m. on September 26, 2010.

DATES: This deviation is effective from 7:30 a.m. to 11:30 a.m. on September 26, 2010.

ADDRESSES: Documents mentioned in this preamble as being available in the docket are part of docket USCG–2010–0299 and are available online by going to *http://www.regulations.gov,* inserting USCG–2010–0299 in the "Keyword" box and then clicking "Search". They are also available for inspection or copying at the Docket Management Facility (M–30), U.S. Department of Transportation, West Building Ground Floor, Room W12–140, 1200 New Jersey Avenue, SE., Washington, DC 20590, between 9 a.m. and 5 p.m., Monday through Friday, except Federal holidays.

FOR FURTHER INFORMATION CONTACT: If you have questions on this rule, call or e-mail Roger K. Wiebusch, Bridge Administrator, Coast Guard; telephone (314) 269–2378, e-mail *Roger.K.Wiebusch@uscg.mil.* If you have questions on viewing the docket, call Renee V. Wright, Program Manager, Docket Operations, telephone (202) 366–9826.

SUPPLEMENTARY INFORMATION: The U.S. Army Rock Island Arsenal requested a temporary deviation for the Rock Island Railroad and Highway Drawbridge, across the Upper Mississippi River, mile 482.9, at Rock Island, Illinois to remain closed to navigation position for a four hour period while a marathon is held between the cities of Davenport, IA and Rock Island, IL. The Rock Island Railroad and Highway Drawbridge currently operates in accordance with 33 CFR 117.5, which states the general requirement that drawbridges shall open promptly and fully for the passage of vessels when a request to open is given in accordance with the subpart.

There are no alternate routes for vessels transiting this section of the Upper Mississippi River.

The Rock Island Railroad and Highway Drawbridge, in the closed-to-navigation position, provides a vertical clearance of 23.8 feet above normal pool. Navigation on the waterway consists primarily of commercial tows and recreational watercraft. This temporary deviation has been coordinated with waterway users. No objections were received.

In accordance with 33 CFR 117.35(e), the drawbridge must return to its regular operating schedule immediately at the end of the designated time period. This deviation from the operating regulations is authorized under 33 CFR 117.35.

Dated: April 15, 2010.

Roger K. Wiebusch,

Bridge Administrator.

[FR Doc. 2010–9801 Filed 4–27–10; 8:45 am]

BILLING CODE 9110–04–P

DEPARTMENT OF HOMELAND SECURITY

Coast Guard

33 CFR Part 165

[Docket No. USCG–2010–0176]

RIN 1625–AA11

Regulated Navigation Area; Lake Champlain Bridge Construction Zone, NY and VT

AGENCY: Coast Guard, DHS.

ACTION: Temporary interim rule with request for comments.

SUMMARY: The Coast Guard is establishing a regulated navigation area around the construction zone of the Lake Champlain Bridge between Crown Point, New York and Chimney Point, Vermont. This temporary interim rule places speed restrictions on all vessels transiting the navigable waters of Lake Champlain in the vicinity of the bridge construction. In addition, this rule provides for the temporary suspension of all vessel traffic within the regulated navigation area during certain periods of construction. This rule is necessary to provide for the safety of life on the navigable waters within this regulated area during the construction of the Lake Champlain Bridge.

DATES: This rule is effective in the CFR on April 28, 2010. This rule is effective with actual notice for purposes of enforcement on April 23, 2010 and is effective through December 31, 2011. Comments and related material must reach the Coast Guard on or before June 28, 2010. Requests for public meetings must be received by the Coast Guard on or before May 28, 2010.

ADDRESSES: You may submit comments identified by docket number USCG–2010–0176 using any one of the following methods:

(1) *Federal eRulemaking Portal: http://www.regulations.gov.*

(2) *Fax:* 202–493–2251.

(3) *Mail:* Docket Management Facility (M–30), U.S. Department of Transportation, West Building Ground Floor, Room W12–140, 1200 New Jersey Avenue, SE., Washington, DC 20590–0001.

(4) *Hand delivery:* Same as mail address above, between 9 a.m. and 5 p.m., Monday through Friday, except Federal holidays. The telephone number is 202–366–9329.

To avoid duplication, please use only one of these four methods. See the "Public Participation and Request for Comments" portion of the **SUPPLEMENTARY INFORMATION** section below for instructions on submitting comments.

Documents indicated in this preamble as being available in the docket are part of docket USCG–2010–0176 and are available online by going to *http://www.regulations.gov,* inserting USCG–2010–0176 in the "Keyword" box, and then clicking "Search." They are also available for inspection or copying at the Docket Management Facility (M–30), U.S. Department of Transportation, West Building Ground Floor, Room W12–140, 1200 New Jersey Avenue, SE., Washington, DC 20590, between 9 a.m. and 5 p.m., Monday through Friday, except Federal holidays.

FOR FURTHER INFORMATION CONTACT: If you have questions on this interim rule, call or e-mail Lieutenant Junior Grade Laura van der Pol, Waterways Management Division at Coast Guard Sector Northern New England, telephone 207–741–5421, e-mail *Laura.K.vanderPol1@uscg.mil.* If you have questions on viewing the docket, call Renee V. Wright, Program Manager, Docket Operations, telephone 202–366–9826.

SUPPLEMENTARY INFORMATION:

Public Participation and Request for Comments

We encourage you to participate in this rulemaking by submitting

comments and related materials. All comments received will be posted, without change, to *http://www.regulations.gov* and will include any personal information you have provided.

As this temporary interim rule will be in effect before the end of the comment period, the Coast Guard will evaluate and revise this rule as necessary to address significant public comments.

Submitting Comments

If you submit a comment, please include the docket number for this rulemaking (USCG–2010–0176), indicate the specific section of this document to which each comment applies, and provide a reason for each suggestion or recommendation. You may submit your comments and material online (via *http://www.regulations.gov*) or by fax, mail or hand delivery, but please use only one of these means. If you submit a comment online via *http://www.regulations.gov,* it will be considered received by the Coast Guard when you successfully transmit the comment. If you fax, hand deliver, or mail your comment, it will be considered as having been received by the Coast Guard when it is received at the Docket Management Facility. We recommend that you include your name and a mailing address, an e-mail address, or a telephone number in the body of your document so that we can contact you if we have questions regarding your submission.

To submit your comment online, go to *http://www.regulations.gov,* click on the "submit a comment" box, which will then become highlighted in blue. In the "Document Type" drop down menu select "Proposed Rule" and insert "USCG–2010–0176" in the "Keyword" box. Click "Search" then click on the balloon shape in the "Actions" column. If you submit comments by mail or hand delivery, submit them in an unbound format, no larger than 8½ by 11 inches, suitable for copying and electronic filing. If you submit comments by mail and would like to know that they reached the Facility, please enclose a stamped, self-addressed postcard or envelope. We will consider all comments and material received during the comment period and may change this rule based on your comments.

Viewing Comments and Documents

To view comments, as well as documents mentioned in this preamble as being available in the docket, go to *http://www.regulations.gov,* click on the "read comments" box, which will then become highlighted in blue. In the "Keyword" box insert "USCG–2010–0176" and click "Search." Click the "Open Docket Folder" in the "Actions" column. You may also visit the Docket Management Facility in Room W12–140 on the ground floor of the Department of Transportation West Building, 1200 New Jersey Avenue, SE., Washington, DC 20590, between 9 a.m. and 5 p.m., Monday through Friday, except Federal holidays. We have an agreement with the Department of Transportation to use the Docket Management Facility.

Privacy Act

Anyone can search the electronic form of comments received into any of our dockets by the name of the individual submitting the comment (or signing the comment, if submitted on behalf of an association, business, labor union, etc.). You may review a Privacy Act notice regarding our public dockets in the January 17, 2008, issue of the **Federal Register** (73 FR 3316).

Public Meeting

We do not now plan to hold a public meeting. You may submit a request for one using one of the four methods specified under **ADDRESSES**. Please explain why you believe a public meeting would be beneficial. If we determine that one would aid revising this rule, we will hold one at a time and place announced by a later notice in the **Federal Register.**

Regulatory Information

The Coast Guard is issuing this temporary final rule without prior notice and opportunity to comment pursuant to authority under section 4(a) of the Administrative Procedure Act (APA) (5 U.S.C. 553(b)). This provision authorizes an agency to issue a rule without prior notice when the agency for good cause finds that those procedures are "impracticable, unnecessary, or contrary to the public interest." Under 5 U.S.C. 553(b)(B), the Coast Guard finds that good cause exists for not publishing a notice of proposed rulemaking (NPRM) with respect to this rule. It is impracticable to issue an NPRM and take public comment before April 23, 2010, when the bridge construction that necessitates creation of a regulated navigation area (RNA) is scheduled to begin. Delaying either the bridge construction, or creation of the RNA, would be contrary to the public interest because the bridge will be a public convenience and because the RNA will provide for public safety by safeguarding both mariners and construction workers during the bridge's construction. We are requesting public comment on the RNA, and if we receive public input that indicates a need to revise the RNA or the conditions it imposes, or raises any other significant public concerns, we will address those concerns prior to issuing any final rule. For the same reasons, under 5 U.S.C. 553(d)(3), the Coast Guard finds that good cause exists for making this rule effective less than 30 days after publication in the **Federal Register.**

Basis and Purpose

Under the Ports and Waterways Safety Act, the Coast Guard has the authority to establish RNAs in defined water areas that are determined to have hazardous conditions and in which vessel traffic can be regulated in the interest of safety. See 33 U.S.C. 1231; Department of Homeland Security Delegation No. 0170.1.

Due to unanticipated structural failure of the old Lake Champlain Bridge, that bridge was demolished in December 2009 and plans were put in place to build a new bridge at that location as expediently as possible. The construction of the new Lake Champlain Bridge involves large machinery and construction vessel operations above and upon the navigable waters of Lake Champlain between Crown Point, New York and Chimney Point, Vermont. The ongoing operations are, by their nature, hazardous and pose risks both to recreational and commercial vessel traffic and the bridge construction crew. In order to mitigate the inherent risks involved in the construction, it is necessary to control vessel movement through the area.

The purpose of this rule is to ensure public and construction worker safety for the duration of the planned Lake Champlain Bridge construction, which is scheduled to begin April 23, 2010 and be completed in 2011. Heavy-lift operations are sensitive to water movement, and wake from passing vessels could pose significant risk of injury or death to construction workers. In order to minimize such unexpected or uncontrolled movement of water, the RNA will limit vessel speed and wake of all vessels operating in the vicinity of the bridge construction zone. This will be achieved by enforcing a five (5) mile per hour speed limit and "NO WAKE" zone in vicinity of the construction as well as providing a means to suspend all vessel traffic for emergent situations that pose imminent threat to waterway users in the area.

Discussion of Rule

This regulated navigation area encompasses the navigable waters on Lake Champlain 300 yards to the north and south of the bridge construction

zone at Crown Point, New York and Chimney Point, Vermont. The area is bounded by coordinates: 44°01′59″ N, 073°25′31″ W and 44°02′04″ N, 073°25′28″ W to the north, and 44°01′56″ N, 073°25′08″ W and 44°01′53″ N, 073°25′14″ W to the south. The area will be marked with four white and orange-striped "NO WAKE" buoys to define the start and end of the regulated area.

All vessels operating in this area must proceed with caution, and operate at no more than five knots and in a manner so as to produce no wake. In addition, the Coast Guard may close this area to all vessel traffic during any circumstance that poses an imminent threat to waterway users operating in the area. We will give as much advance notice as possible when this occurs. Normally, we expect complete closures to be preceded by at least ten days notice.

Notice will include the date and time of the closure as well as the date and time that normal vessel traffic is expected to resume. At present, we expect at least two days when the area will be completely closed, during the final phase of construction when the center bridge spans are lifted into place, but those days have not yet been scheduled.

The Captain of the Port Sector Northern New England (COTP) will cause notice of enforcement, suspension of enforcement, or closure of this regulated navigation area to be made by all appropriate means to ensure the widest distribution among the affected segments of the public. Such means of notification will include, but are not limited to, Broadcast Notice to Mariners and Local Notice to Mariners. In addition, the COTP maintains a telephone line that is staffed 24 hours a day, seven days a week. The public can obtain information concerning enforcement of the regulated navigation area by contacting Coast Guard Sector Northern New England Command Center at (207) 767–0303.

Regulatory Analyses

We developed this rule after considering numerous statutes and executive orders related to rulemaking. Below we summarize our analyses based on 13 of these statutes or executive orders.

Regulatory Planning and Review

This rule is not a significant regulatory action under section 3(f) of Executive Order 12866, Regulatory Planning and Review, and does not require an assessment of potential costs and benefits under section 6(a)(3) of that Order. The Office of Management and Budget has not reviewed it under that Order.

We expect the economic impact of this rule to be minimal because this regulated navigation area requires vessels to reduce speed through 600 yards of Lake Champlain, therefore causing only a minimal delay to a vessel's transit. In addition, periods when the regulated navigation area is closed to all traffic are expected to be short in duration, and we expect to give advance notice of such closures.

Small Entities

Under the Regulatory Flexibility Act (5 U.S.C. 601–612), we have considered whether this rule would have a significant economic impact on a substantial number of small entities. The term "small entities" comprises small businesses, not-for-profit organizations that are independently owned and operated and are not dominant in their fields, and governmental jurisdictions with populations of less than 50,000.

The Coast Guard certifies under 5 U.S.C. 605(b) that this rule will not have a significant economic impact on a substantial number of small entities. This rule will affect the following entities, some of which may be small entities: Lake Champlain Transportation Company, Champlain Bridge Marina, Van Slooten Marina, Port Henry Marina, Chipman Point Marina, Buoy 39 Marina, and the owners or operators of vessels intending to transit the portion of Lake Champlain affected by this rule between April 23, 2010 and December 31, 2011. This regulated navigation area will not have a significant economic impact on a substantial number of small entities for the following reasons: It requires vessels to reduce speed through 600 yards of Lake Champlain, therefore causing only a minimal delay to a vessel's transit. In addition, periods when the regulated navigation area is closed to all traffic are expected to be short in duration, and we expect to give advance notice of such closures.

Assistance for Small Entities

Under section 213(a) of the Small Business Regulatory Enforcement Fairness Act of 1996 (Pub. L. 104–121), we offer to assist small entities in understanding the rule so that they can better evaluate its effects on them and participate in the rulemaking process.

Small businesses may send comments on the actions of Federal employees who enforce, or otherwise determine compliance with, Federal regulations to the Small Business and Agriculture Regulatory Enforcement Ombudsman and the Regional Small Business Regulatory Fairness Boards. The Ombudsman evaluates these actions annually and rates each agency's responsiveness to small business. If you wish to comment on actions by employees of the Coast Guard, call 1–888–REG–FAIR (1–888–734–3247). The Coast Guard will not retaliate against small entities that question or complain about this rule or any policy or action of the Coast Guard.

Collection of Information

This rule calls for no new collection of information under the Paperwork Reduction Act of 1995 (44 U.S.C. 3501–3520).

Federalism

A rule has implications for federalism under Executive Order 13132, Federalism, if it has a substantial direct effect on State or local governments and would either preempt State law or impose a substantial direct cost of compliance on them. We have analyzed this rule under that Order and have determined that it does not have implications for federalism.

Unfunded Mandates Reform Act

The Unfunded Mandates Reform Act of 1995 (2 U.S.C. 1531–1538) requires Federal agencies to assess the effects of their discretionary regulatory actions. In particular, the Act addresses actions that may result in the expenditure by a State, local, or tribal government, in the aggregate, or by the private sector of $100,000,000 (adjusted for inflation) or more in any one year. Though this rule will not result in such expenditure, we do discuss the effects of this rule elsewhere in this preamble.

Taking of Private Property

This rule will not cause a taking of private property or otherwise have taking implications under Executive Order 12630, Governmental Actions and Interference with Constitutionally Protected Property Rights.

Civil Justice Reform

This rule meets applicable standards in sections 3(a) and 3(b)(2) of Executive Order 12988, Civil Justice Reform, to minimize litigation, eliminate ambiguity, and reduce burden.

Protection of Children

We have analyzed this rule under Executive Order 13045, Protection of Children from Environmental Health Risks and Safety Risks. This rule is not an economically significant rule and does not create an environmental risk to

health or risk to safety that may disproportionately affect children.

Indian Tribal Governments

This rule does not have tribal implications under Executive Order 13175, Consultation and Coordination with Indian Tribal Governments, because it does not have a substantial direct effect on one or more Indian tribes, on the relationship between the Federal Government and Indian tribes, or on the distribution of power and responsibilities between the Federal Government and Indian tribes.

Energy Effects

We have analyzed this rule under Executive Order 13211, Actions Concerning Regulations That Significantly Affect Energy Supply, Distribution, or Use. We have determined that it is not a "significant energy action" under that order because it is not a "significant regulatory action" under Executive Order 12866 and is not likely to have a significant adverse effect on the supply, distribution, or use of energy. The Administrator of the Office of Information and Regulatory Affairs has not designated it as a significant energy action. Therefore, it does not require a Statement of Energy Effects under Executive Order 13211.

Technical Standards

The National Technology Transfer and Advancement Act (NTTAA) (15 U.S.C. 272 note) directs agencies to use voluntary consensus standards in their regulatory activities unless the agency provides Congress, through the Office of Management and Budget, with an explanation of why using these standards would be inconsistent with applicable law or otherwise impractical. Voluntary consensus standards are technical standards (*e.g.,* specifications of materials, performance, design, or operation; test methods; sampling procedures; and related management systems practices) that are developed or adopted by voluntary consensus standards bodies.

This rule does not use technical standards. Therefore, we did not consider the use of voluntary consensus standards.

Environment

We have analyzed this rule under Department of Homeland Security Management Directive 023–01 and Commandant Instruction M16475.lD, which guide the Coast Guard in complying with the National Environmental Policy Act of 1969 (NEPA) (42 U.S.C. 4321–4370f), and have concluded this action is one of a category of actions that do not individually or cumulatively have a significant effect on the human environment. This rule is categorically excluded, under figure 2–1, paragraph (34)(g), of the Instruction. This rule involves the establishing of a regulated navigation area and therefore falls within the categorical exclusion noted above. An environmental analysis checklist and a categorical exclusion determination are available in the docket where indicated under **ADDRESSES**. Any comments received concerning environmental impacts will be considered and changes made to the environmental analysis checklist and categorical exclusion determination as appropriate.

List of Subjects in 33 CFR Part 165

Harbors, Marine safety, Navigation (water), Reporting and recordkeeping requirements, Security measures, Waterways.

■ For the reasons discussed in the preamble, the Coast Guard amends 33 CFR Part 165 as follows:

PART 165—REGULATED NAVIGATION AREAS AND LIMITED ACCESS AREAS

■ 1. The authority citation for Part 165 continues to read as follows:

Authority: 33 U.S.C. 1226, 1231; 46 U.S.C. Chapter 701, 3306, 3703; 50 U.S.C. 191, 195; 33 CFR 1.05–1, 6.04–1, 6.04–6, and 160.5; Pub. L. 107–295, 116 Stat. 2064; Department of Homeland Security Delegation No. 0170.1.

■ 2. Add § 165.T01–0176 to read as follows:

§ 165.T01–0176 Regulated Navigation Area; Lake Champlain Bridge Construction, Crown Point, New York and Chimney Point, Vermont.

(a) *Description of the regulated navigation area (RNA).* All navigable waters on Lake Champlain 300 yards to the north and south of the Lake Champlain Bridge construction zone at Crown Point, New York and Chimney Point, Vermont. The area is bounded by coordinates 44°01′59″ N, 073°25′31″ W and 44°02′04″ N, 073°25′28″ W to the north, and 44°01′56″ N, 073°25′08″ W and 44°01′53″ N, 073°25′14″ W to the south. The area will be marked with four white and orange-striped "NO WAKE" buoys to define the start and end of the regulated area.

(b) *Regulations.* In addition to 33 CFR 165.10, 165.11, and 165.13, the following restrictions or conditions apply within this RNA:

(1) No vessel may operate at a speed in excess of five knots.

(2) All vessels must proceed through the area with caution and operate in such a manner as to produce no wake.

(3) Vessels must comply with all directions given to them by the Captain of the Port (COTP) Sector Northern New England or his on-scene representative. The "on-scene representative" of the COTP is any Coast Guard commissioned, warrant, or petty officer who has been designated by the COTP to act on the COTP's behalf. The on-scene representative may be on a Coast Guard vessel, New York State Police, New York Department of Environmental Conservation, Vermont State Police, and Vermont Fish and Game or other designated craft, or may be on shore and will communicate with vessels via VHF–FM radio or loudhailer. Members of the Coast Guard Auxiliary may be present to inform vessel operators of this regulation.

(4) During certain construction activities including installation of the bridge lift span and as deemed necessary by the COTP, all vessel movement into or within the regulated area may be prohibited.

(5) For purposes of navigational safety, the COTP or on-scene representative may authorize a deviation from this regulation.

(c) *Enforcement.* (1) This regulated navigation area is enforceable from April 23, 2010 through December 31, 2011.

(2) The COTP may temporarily suspend all vessel traffic through the RNA, temporarily suspend enforcement of the RNA, or suspend enforcement of the RNA at the conclusion of bridge construction. In any of these events, the COTP will give notice by all appropriate means to ensure the widest publicity among the affected segments of the public. Such means of notification may include, but are not limited to, Broadcast Notice to Mariners and Local Notice to Mariners. Notification will include the beginning and end dates and times when the traffic suspension or enforcement suspension is effective.

(3) Violations of this RNA should be reported to the COTP at (207) 767–0303 or on VHF–Channel 16. Persons in violation of this RNA may be subject to civil and criminal penalties.

Dated: April 19, 2010.

J.A. Servidio,

Captain, U.S. Coast Guard, Commander, First Coast Guard District, Acting.

[FR Doc. 2010–9800 Filed 4–27–10; 8:45 am]

BILLING CODE 9110–04–P

DEPARTMENT OF HOMELAND SECURITY

Coast Guard

33 CFR PART 165

[Docket No. USCG–2010–0177]

RIN 1625–AA00

Safety Zone; 2010 Veterans Tribute Fireworks, Lake Charlevoix, Boyne City, MI

AGENCY: Coast Guard, DHS.

ACTION: Temporary final rule.

SUMMARY: The Coast Guard is establishing a temporary safety zone on the waters of Lake Charlevoix near Boyne City, Michigan. All vessels are prohibited from transiting the zone located on a portion of Lake Charlevoix. This temporary safety zone is necessary to protect the surrounding public and vessels from the hazards associated with a fireworks display.

DATES: This rule is effective from 10 p.m. through 10:45 p.m. on May 29, 2010.

ADDRESSES: Documents indicated in this preamble as being available in the docket are part of docket USCG–2010–0177 and are available online by going to *http://www.regulations.gov*, inserting USCG–2010–0177 in the "Keyword" box, and then clicking "Search." They are also available for inspection or copying at the Docket Management Facility (M–30), U.S. Department of Transportation, West Building Ground Floor, Room W12–140, 1200 New Jersey Avenue SE., Washington, DC 20590, between 9 a.m. and 5 p.m., Monday through Friday, except Federal holidays.

FOR FURTHER INFORMATION CONTACT: If you have questions on this temporary rule, call or e-mail BM1 Adam Kraft, U.S. Coast Guard, Sector Lake Michigan, telephone 414–747–7154, e-mail *Adam.D.Kraft@uscg.mil.* If you have questions on viewing the docket, call Renee V. Wright, Program Manager, Docket Operations, telephone 202–366–9826.

SUPPLEMENTARY INFORMATION:

Regulatory Information

The Coast Guard is issuing this temporary final rule without prior notice and opportunity to comment pursuant to authority under section 4(a) of the Administrative Procedure Act (APA) (5 U.S.C. 553(b)). This provision authorizes an agency to issue a rule without prior notice and opportunity to comment when the agency for good cause finds that those procedures are "impracticable, unnecessary, or contrary to the public interest." Under 5 U.S.C. 553(b)(B), the Coast Guard finds that good cause exists for not publishing a notice of proposed rulemaking (NPRM) with respect to this rule because it is contrary to public interest to delay the effective date of this rule. Delaying the effective date would be contrary to the safety zone's intended objectives since immediate action is needed to protect persons and vessels against the hazards associated with a fireworks display on navigable waters. Such hazards include premature detonations, dangerous projectiles and falling or burning debris.

Under 5 U.S.C. 553(d)(3), the Coast Guard finds that good cause exists for making this rule effective less than 30 days after publication in the **Federal Register**. Due to the need for immediate action, the restriction of vessel traffic is necessary to protect life, property and the environment; therefore, a 30-day notice is impracticable. Delaying the effective date would be contrary to the safety zone's intended objectives of protecting persons and vessels involved in the event, and enhancing public and maritime safety.

Basis and Purpose

This temporary safety zone is necessary to protect vessels from the hazards associated with the 2010 Veterans Tribute Fireworks. The Captain of the Port, Sector Lake Michigan, has determined that the Veterans Tribute Fireworks Display does pose significant risks to public safety and property. The likely combination of congested waterways and a fireworks display could easily result in serious injuries or fatalities.

Discussion of Rule

The temporary safety zone will encompass all waters of Lake Charlevoix, in the vicinity of Sommerset Point, within the arc of a circle with a 800-foot radius from a fireworks launch site located on a barge in position 45°13′04″ N, 085°03′41″ W [DATUM: NAD 83]. The temporary safety zone will be enforced from 10 p.m. through 10:45 p.m. on May 29, 2010.

All persons and vessels shall comply with the instructions of the Captain of the Port, Sector Lake Michigan, or his or her on-scene representative. Entry into, transiting, or anchoring within the safety zone is prohibited unless authorized by the Captain of the Port, Sector Lake Michigan, or his or her on-scene representative. The Captain of the Port, Sector Lake Michigan, or his or her on-scene representative may be contacted via VHF Channel 16.

Regulatory Analyses

We developed this rule after considering numerous statutes and executive orders related to rulemaking. Below we summarize our analyses based on 13 of these statutes or executive orders.

Regulatory Planning and Review

This rule is not a significant regulatory action under section 3(f) of Executive Order 12866, Regulatory Planning and Review, and does not require an assessment of potential costs and benefits under section 6(a)(3) of that Order. The Office of Management and Budget has not reviewed it under that Order. Although this regulation will restrict access to the area, the effect of this rule will not be significant because the safety zone is relatively small and will exist for only a minimal time. Under certain conditions, moreover, vessels may still transit through the safety zone when permitted by proper authority.

Small Entities

Under the Regulatory Flexibility Act (5 U.S.C. 601–612), we have considered whether this rule would have a significant economic impact on a substantial number of small entities. The term "small entities" comprises small businesses, not-for-profit organizations that are independently owned and operated and are not dominant in their fields, and governmental jurisdictions with populations of less than 50,000.

The Coast Guard certifies under 5 U.S.C. 605(b) that this rule will not have a significant economic impact on a substantial number of small entities.

This rule will affect the following entities, some of which might be small entities: The owners or operators of vessels intending to transit or anchor in a portion of Lake Charlevoix between 10 p.m. through 10:45 p.m. on May 29, 2010.

This safety zone will not have a significant economic impact on a substantial number of small entities for the following reasons: This rule will only be enforced for short period of time. Vessels may safely pass outside the safety zone during the event. In the event that this temporary safety zone affects shipping, commercial vessels may request permission from the Captain of the Port, Sector Lake Michigan, to transit through the safety zone. The Coast Guard will give notice to the public via a Broadcast to Mariners that the regulation is in effect.

Assistance for Small Entities

Under section 213(a) of the Small Business Regulatory Enforcement Fairness Act of 1996 (Pub. L. 104–121), we offer to assist small entities in understanding the rule so that they can better evaluate its effects on them and participate in the rulemaking process.

Small businesses may send comments on the actions of Federal employees who enforce, or otherwise determine compliance with, Federal regulations to the Small Business and Agriculture Regulatory Enforcement Ombudsman and the Regional Small Business Regulatory Fairness Boards. The Ombudsman evaluates these actions annually and rates each agency's responsiveness to small business. If you wish to comment on actions by employees of the Coast Guard, call 1–888–REG–FAIR (1–888–734–3247). The Coast Guard will not retaliate against small entities that question or complain about this rule or any policy or action of the Coast Guard.

Collection of Information

This rule calls for no new collection of information under the Paperwork Reduction Act of 1995 (44 U.S.C. 3501–3520).

Federalism

A rule has implications for federalism under Executive Order 13132, Federalism, if it has a substantial direct effect on State or local governments and would either preempt State law or impose a substantial direct cost of compliance on them. We have analyzed this rule under that Order and have determined that it does not have implications for federalism.

Unfunded Mandates Reform Act

The Unfunded Mandates Reform Act of 1995 (2 U.S.C. 1531–1538) requires Federal agencies to assess the effects of their discretionary regulatory actions. In particular, the Act addresses actions that may result in the expenditure by a State, local, or Tribal government, in the aggregate, or by the private sector of $100,000,000 (adjusted for inflation) or more in any one year. Though this rule will not result in such an expenditure, we do discuss the effects of this rule elsewhere in this preamble.

Taking of Private Property

This rule will not cause a taking of private property or otherwise have taking implications under Executive Order 12630, Governmental Actions and Interference with Constitutionally Protected Property Rights.

Civil Justice Reform

This rule meets applicable standards in sections 3(a) and 3(b)(2) of Executive Order 12988, Civil Justice Reform, to minimize litigation, eliminate ambiguity, and reduce burden.

Protection of Children

We have analyzed this rule under Executive Order 13045, Protection of Children from Environmental Health Risks and Safety Risks. This rule is not an economically significant rule and does not create an environmental risk to health or risk to safety that may disproportionately affect children.

Indian Tribal Governments

This rule does not have Tribal implications under Executive Order 13175, Consultation and Coordination with Indian Tribal Governments, because it would not have a substantial direct effect on one or more Indian Tribes, on the relationship between the Federal Government and Indian Tribes, or on the distribution of power and responsibilities between the Federal Government and Indian Tribes. We invite your comments on how this rule might impact Tribal governments, even if that impact may not constitute a "Tribal implication" under the Order.

Energy Effects

We have analyzed this rule under Executive Order 13211, Actions Concerning Regulations That Significantly Affect Energy Supply, Distribution, or Use. We have determined that it is not a "significant energy action" under that order because it is not a "significant regulatory action" under Executive Order 12866 and is not likely to have a significant adverse effect on the supply, distribution, or use of energy. The Administrator of the Office of Information and Regulatory Affairs has not designated it as a significant energy action. Therefore, it does not require a Statement of Energy Effects under Executive Order 13211.

Technical Standards

The National Technology Transfer and Advancement Act (NTTAA) (15 U.S.C. 272 note) directs agencies to use voluntary consensus standards in their regulatory activities unless the agency provides Congress, through the Office of Management and Budget, with an explanation of why using these standards would be inconsistent with applicable law or otherwise impractical. Voluntary consensus standards are technical standards (*e.g.,* specifications of materials, performance, design, or operation; test methods; sampling procedures; and related management systems practices) that are developed or adopted by voluntary consensus standards bodies.

This rule does not use technical standards. Therefore, we did not consider the use of voluntary consensus standards.

Environment

We have analyzed this rule under Department of Homeland Security Management Directive 023–01 and Commandant Instruction M16475.lD, which guide the Coast Guard in complying with the National Environmental Policy Act of 1969 (NEPA) (42 U.S.C. 4321–4370f), and have concluded this action is one of a category of actions that do not individually or cumulatively have a significant effect on the human environment. This rule is categorically excluded, under figure 2–1, paragraph (34)(g), of the Instruction. This rule involves the establishment of a temporary safety zone to protect the public from the dangers associated with a fireworks display.

A final environmental analysis check list and categorical exclusion determination are available in the docket where indicated under **ADDRESSES**.

List of Subjects in 33 CFR Part 165

Harbors, Marine safety, Navigation (water), Reporting and recordkeeping requirements, Security measures, Waterways.

■ For the reasons discussed in the preamble, the Coast Guard amends 33 CFR Part 165 as follows:

PART 165—REGULATED NAVIGATION AREAS AND LIMITED ACCESS AREAS

■ 1. The authority citation for part 165 continues to read as follows:

Authority: 33 U.S.C. 1226, 1231; 46 U.S.C. Chapter 701, 3306, 3703; 50 U.S.C. 191, 195; 33 CFR 1.05–1, 6.04–1, 6.04–6, and 160.5; Pub. L. 107–295, 116 Stat. 2064; Department of Homeland Security Delegation No. 0170.1.

■ 2. Add § 165.T09–0177 to read as follows:

§ 165.T09–0177 Safety Zone; 2010 Veterans Tribute Fireworks, Lake Charlevoix, Boyne City, MI

(a) *Location.* The safety zone will encompass all waters of Lake Charlevoix, in the vicinity Sommerset Pointe, within the arc of a circle with an 800-foot radius from a fireworks launch site located on a barge in position 45°13′04″ N, 085°03′41″ W [DATUM: NAD 83].

(b) *Enforcement period.* This regulation will be enforced 10 p.m.

through 10:45 p.m. on May 29, 2010. The Captain of the Port, Sector Lake Michigan, or his or her on-scene representative may terminate this operation at any time.

(c) *Regulations.* (1) In accordance with the general regulations in § 165.23 of this part, entry into, transiting, or anchoring within this safety zone is prohibited unless authorized by the Captain of the Port, Sector Lake Michigan, or his or her on-scene representative.

(2) This safety zone is closed to all vessel traffic, except as may be permitted by the Captain of the Port, Sector Lake Michigan, or his or her on-scene representative.

(3) The "on-scene representative" of the Captain of the Port, Sector Lake Michigan, is any Coast Guard commissioned, warrant or petty officer who has been designated by the Captain of the Port, Sector Lake Michigan, to act on his or her behalf. The on-scene representative of the Captain of the Port, Sector Lake Michigan, will be aboard either a Coast Guard or Coast Guard Auxiliary vessel.

(4) Vessel operators desiring to enter or operate within the safety zone shall contact the Captain of the Port, Sector Lake Michigan, or his or her on-scene representative to obtain permission to do so. The Captain of the Port, Sector Lake Michigan, or his or her on-scene representative may be contacted via VHF Channel 16. Vessel operators given permission to enter or operate in the safety zone must comply with all directions given to them by the Captain of the Port, Sector Lake Michigan, or his or her on-scene representative.

Dated: April 8, 2010.

L. Barndt,

Captain, U.S. Coast Guard, Captain of the Port, Sector Lake Michigan.

[FR Doc. 2010–9797 Filed 4–27–10; 8:45 am]

BILLING CODE 9110–04–P

DEPARTMENT OF HOMELAND SECURITY

Coast Guard

33 CFR Part 165

[USCG–2010–0251]

RIN 1625–AA00

Safety Zone; Milwaukee Harbor, Milwaukee, WI

AGENCY: Coast Guard, DHS.

ACTION: Notice of enforcement of regulation.

SUMMARY: The Coast Guard will enforce the safety zone for annual fireworks events in the Captain of the Port, Sector Lake Michigan, during four separate periods between 9:15 p.m. on June 12, 2010 and 10:30 p.m. on June 24, 2010. This action is necessary and intended to ensure safety of life on the navigable waters of the United States immediately prior to, during, and immediately after fireworks events. This action will establish restrictions upon, and control movement of, vessels in a specified area immediately prior to, during, and immediately after fireworks events. During the enforcement period, no person or vessel may enter the safety zones without permission of the Captain of the Port, Sector Lake Michigan.

DATES: The regulations in 33 CFR 165.935 will be enforced during four separate periods between 9:15 p.m. on June 12, 2010 and 10:30 p.m. on June 24, 2010.

FOR FURTHER INFORMATION CONTACT: If you have questions on this notice, call or e-mail BM1 Adam Kraft, Prevention Department, Coast Guard Sector Lake Michigan, Milwaukee, WI at 414–747–7154, e-mail *Adam.D.Kraft@uscg.mil.*

SUPPLEMENTARY INFORMATION: The Coast Guard will enforce the safety zone listed in 33 CFR 165.935, Safety Zones, Milwaukee Harbor, Milwaukee, WI, for the following events:

(1) *Pridefest fireworks display* on June 12, 2010 from 9:15 p.m. through 10 p.m.

(2) *Polish Festival fireworks display* on June 18, 2010 from 9:15 p.m. through 10 p.m.; on June 19, 2010 from 9:15 p.m. through 10 p.m.

(3) *Summerfest fireworks display* on June 24, 2010 from 9:15 p.m. through 10:30 p.m.

All vessels must obtain permission from the Captain of the Port, Sector Lake Michigan, or his or her on-scene representative to enter, move within, or exit the safety zone. Vessels and persons granted permission to enter the safety zone shall obey all lawful orders or directions of the Captain of the Port, Sector Lake Michigan, or his or her on-scene representative. While within a safety zone, all vessels shall operate at the minimum speed necessary to maintain a safe course.

This notice is issued under authority of 33 CFR 165.935 Safety Zone, Milwaukee Harbor, Milwaukee, WI and 5 U.S.C. 552(a). In addition to this notice in the **Federal Register**, the Coast Guard will provide the maritime community with advance notification of these enforcement periods via broadcast Notice to Mariners or Local Notice to Mariners. The Captain of the Port, Sector Lake Michigan, will issue a Broadcast Notice to Mariners notifying the public when enforcement of the safety zone established by this section is suspended. If the Captain of the Port, Sector Lake Michigan, determines that the safety zone need not be enforced for the full duration stated in this notice, he or she may use a Broadcast Notice to Mariners to grant general permission to enter the safety zone. The Captain of the Port, Sector Lake Michigan, or his or her on-scene representative may be contacted via VHF Channel 16.

Dated: April 8, 2010.

L. Barndt,

Captain, U.S. Coast Guard, Captain of the Port, Sector Lake Michigan.

[FR Doc. 2010–9799 Filed 4–27–10; 8:45 am]

BILLING CODE 9110–04–P

ENVIRONMENTAL PROTECTION AGENCY

40 CFR Part 180

[EPA–HQ–OPP–2009–0165; FRL–8816–4]

Phosphate Ester, Tallowamine, Ethoxylated; Exemption from the Requirement of a Tolerance

AGENCY: Environmental Protection Agency (EPA).

ACTION: Final rule.

SUMMARY: This regulation establishes an exemption from the requirement of a tolerance for residues of phosphate ester, tallowamine, ethoxylated (CAS Reg. No. 68308–48–5), herein referred to in this document as PETAE when used as an inert ingredient at a maximum of 20% by weight in pesticide formulations applied in or on growing crops. Huntsman Corporation submitted a petition to EPA under the Federal Food, Drug, and Cosmetic Act (FFDCA), requesting establishment of an exemption from the requirement of a tolerance. This regulation eliminates the need to establish a maximum permissible level for residues of PETAE.

DATES: This regulation is effective April 28, 2010. Objections and requests for hearings must be received on or before June 28, 2010, and must be filed in accordance with the instructions provided in 40 CFR part 178 (see also Unit I.C. of the **SUPPLEMENTARY INFORMATION**).

ADDRESSES: EPA has established a docket for this action under docket identification (ID) number EPA–HQ–OPP–2009–0165. All documents in the docket are listed in the docket index available at *http://www.regulations.gov*. Although listed in the index, some information is not publicly available,

e.g., Confidential Business Information (CBI) or other information whose disclosure is restricted by statute. Certain other material, such as copyrighted material, is not placed on the Internet and will be publicly available only in hard copy form. Publicly available docket materials are available in the electronic docket at *http://www.regulations.gov*, or, if only available in hard copy, at the OPP Regulatory Public Docket in Rm. S–4400, One Potomac Yard (South Bldg.), 2777 S. Crystal Dr., Arlington, VA. The Docket Facility is open from 8:30 a.m. to 4 p.m., Monday through Friday, excluding legal holidays. The Docket Facility telephone number is (703) 305–5805.

FOR FURTHER INFORMATION CONTACT: Alganesh Debesai, Registration Division (7505P), Office of Pesticide Programs, Environmental Protection Agency, 1200 Pennsylvania Ave., NW., Washington, DC 20460–0001; telephone number: (703) 308–8353; e-mail address: *debesai.alganesh@epa.gov*.

SUPPLEMENTARY INFORMATION:

I. General Information

A. Does this Action Apply to Me?

You may be potentially affected by this action if you are an agricultural producer, food manufacturer, or pesticide manufacturer. Potentially affected entities may include, but are not limited to:

- Crop production (NAICS code 111).
- Animal production (NAICS code 112).
- Food manufacturing (NAICS code 311).
- Pesticide manufacturing (NAICS code 32532).

This listing is not intended to be exhaustive, but rather provides a guide for readers regarding entities likely to be affected by this action. Other types of entities not listed in this unit could also be affected. The North American Industrial Classification System (NAICS) codes have been provided to assist you and others in determining whether this action might apply to certain entities. If you have any questions regarding the applicability of this action to a particular entity, consult the person listed under **FOR FURTHER INFORMATION CONTACT**.

B. How Can I Get Electronic Access to Other Related Information?

You may access a frequently updated electronic version of 40 CFR part 180 through the Government Printing Office's e-CFR cite at *http://www.gpoaccess.gov/ecfr*. To access the OPPTS harmonized test guidelines referenced in this document electronically, please go to *http://www.epa.gov/oppts* and select "Test Methods and Guidelines."

C. Can I File an Objection or Hearing Request?

Under section 408(g) of FFDCA, 21 U.S.C. 346a, any person may file an objection to any aspect of this regulation and may also request a hearing on those objections. The EPA procedural regulations which govern the submission of objections and requests for hearings appear in 40 CFR part 178. You must file your objection or request a hearing on this regulation in accordance with the instructions provided in 40 CFR part 178. To ensure proper receipt by EPA, you must identify docket ID number EPA–HQ–OPP–2009–0165 in the subject line on the first page of your submission. All objections and requests for a hearing must be in writing, and must be received by the Hearing Clerk on or before June 28, 2010. Addresses for mail and hand delivery of objections and hearing requests are provided in 40 CFR 178.25(b).

In addition to filing an objection or hearing request with the Hearing Clerk as described in 40 CFR part 178, please submit a copy of the filing that does not contain any CBI for inclusion in the public docket that is described in **ADDRESSES**. Information not marked confidential pursuant to 40 CFR part 2 may be disclosed publicly by EPA without prior notice. Submit your copies, identified by docket ID number EPA–HQ–OPP–2009–0165, by one of the following methods:

- *Federal eRulemaking Portal*: *http://www.regulations.gov*. Follow the on-line instructions for submitting comments.
- *Mail*: Office of Pesticide Programs (OPP) Regulatory Public Docket (7502P), Environmental Protection Agency, 1200 Pennsylvania Ave., NW., Washington, DC 20460–0001.
- *Delivery*: OPP Regulatory Public Docket (7502P), Environmental Protection Agency, Rm. S–4400, One Potomac Yard (South Bldg.), 2777 S. Crystal Dr., Arlington, VA. Deliveries are only accepted during the Docket Facility's normal hours of operation (8:30 a.m. to 4 p.m., Monday through Friday, excluding legal holidays). Special arrangements should be made for deliveries of boxed information. The Docket Facility telephone number is (703) 305–5805.

II. Petition for Exemption

In the **Federal Register** of April 8, 2009 (74 FR 15975) (FRL–8407–4), EPA issued a notice pursuant to section 408 of FFDCA, 21 U.S.C. 346a, announcing the filing of a pesticide petition (PP 8E7477) by Huntsman Corporation, 8600 Gosling Road, Woodlands, TX 77381. The petition requested that 40 CFR 180.920 be amended by establishing an exemption from the requirement of a tolerance for residues of tallowamine, ethoxylated, mixture of dihydrogen phosphate and monohydrogen phosphate esters and the corresponding ammonium, calcium, potassium, and sodium salts of the phosphate esters, where the poly(oxyethylene) content averages 2–20 moles, (CAS Reg. No. 68308–48–5) when used as an inert ingredient as surfactants, related adjuvants of surfactants in pesticide formulations applied to growing crops at a maximum of 20% by weight in pesticide formulations. That notice referenced a summary of the petition prepared by Huntsman Corporation, the petitioner, which is available in the docket, *http://www.regulations.gov*. There were no comments received in response to the notice of filing.

III. Inert Ingredient Definition

Inert ingredients are all ingredients that are not active ingredients as defined in 40 CFR 153.125 and include, but are not limited to, the following types of ingredients (except when they have a pesticidal efficacy of their own): Solvents such as alcohols and hydrocarbons; surfactants such as polyoxyethylene polymers and fatty acids; carriers such as clay and diatomaceous earth; thickeners such as carrageenan and modified cellulose; wetting, spreading, and dispersing agents; propellants in aerosol dispensers; microencapsulating agents; and emulsifiers. The term "inert" is not intended to imply nontoxicity; the ingredient may or may not be chemically active. Generally, EPA has exempted inert ingredients from the requirement of a tolerance based on the low toxicity of the individual inert ingredients.

IV. Aggregate Risk Assessment and Determination of Safety

Section 408(c)(2)(A)(i) of FFDCA allows EPA to establish an exemption from the requirement for a tolerance (the legal limit for a pesticide chemical residue in or on a food) only if EPA determines that the tolerance is "safe." Section 408(b)(2)(A)(ii) of FFDCA defines "safe" to mean that "there is a reasonable certainty that no harm will result from aggregate exposure to the pesticide chemical residue, including all anticipated dietary exposures and all other exposures for which there is

reliable information." This includes exposure through drinking water and in residential settings, but does not include occupational exposure. Section 408(b)(2)(C) of FFDCA requires EPA to give special consideration to exposure of infants and children to the pesticide chemical residue in establishing a tolerance and to "ensure that there is a reasonable certainty that no harm will result to infants and children from aggregate exposure to the pesticide chemical residue. . . ."

EPA establishes exemptions from the requirement of a tolerance only in those cases where it can be clearly demonstrated that the risks from aggregate exposure to pesticide chemical residues under reasonably foreseeable circumstances will pose no appreciable risks to human health. In order to determine the risks from aggregate exposure to pesticide inert ingredients, the Agency considers the toxicity of the inert in conjunction with possible exposure to residues of the inert ingredient through food, drinking water, and through other exposures that occur as a result of pesticide use in residential settings. If EPA is able to determine that a finite tolerance is not necessary to ensure that there is a reasonable certainty that no harm will result from aggregate exposure to the inert ingredient, an exemption from the requirement of a tolerance may be established.

Consistent with section 408(c)(2)(A) of FFDCA, and the factors specified in FFDCA section 408(c)(2)(B), EPA has reviewed the available scientific data and other relevant information in support of this action. EPA has sufficient data to assess the hazards of and to make a determination on aggregate exposure for PETAE including exposure resulting from the exemption established by this action. EPA's assessment of exposures and risks associated with PETAE follows.

A. Toxicological Profile

EPA has evaluated the available toxicity data and considered their validity, completeness, and reliability as well as the relationship of the results of the studies to human risk. EPA has also considered available information concerning the variability of the sensitivities of major identifiable subgroups of consumers, including infants and children. Specific information on the studies received and the nature of the adverse effects caused by PETAE as well as the no-observed-adverse-effect-level (NOAEL) and the lowest-observed-adverse-effect-level (LOAEL) from the toxicity studies are discussed in this unit.

The following provides a brief summary of the risk assessment and conclusions for the Agency's review of PETAE. The Agency's full decision document for this action is available in the Agency's electronic docket (*regulations.gov*) under the docket number EPA–HQ–OPP–2009–0165. The database on PETAE is limited, however, the Agency has determined that studies on alkyl amine polyalkoxylates (AAPs) can be used to asses the toxicity of the PETAE because PETAE is a phosphate ester form of AAPs. The Agency has recently evaluated AAPs in docket ID number EPA–HQ–OPP–2008–0738.

PETAE is not acutely toxic via oral, dermal, and inhalation routes of exposure. It is extremely irritating to the eyes and slightly irritating to the skin. It is not a dermal sensitizer. In a Combined Repeated Dose Toxicity Study with the Reproduction/ Developmental Toxicity Screening Test, clinical signs of toxicity (abnormal respiratory sounds, dyspnea, piloerection, and emaciation), mortality and decreased food consumptions and decreased in body weights were observed in parental animals at 200 milligrams/kilogram/day (mg/kg/day). The clinical signs observed in this study are indicative of local irritation. No effects on functional observation battery (FOB) parameters were observed. The gestation index was decreased primarily due to mortality of females. Decreased in corpora lutea and implantation sites were observed at the highest dose tested (200 mg/kg/day). Decrease in pups' body weight gain was observed on day 4 at the high dose only. No mutagenicity studies are available in the database; however, there was no evidence that AAPs are mutagenic or clastogenic. There are no chronic toxicity or carcinogenicity studies available in the database. There is no evidence that the AAPs are carcinogenic. The Agency used a qualitative structure activity relationship (QSAR) database, DEREK11, to determine if there were structural alerts for a representative large molecule, as well as a smaller molecule that had been extensively dealkylated, with the amine group intact. No structural alerts were identified. Therefore, there are no triggers for carcinogenicity of PETAE in the database.

B. Toxicological Points of Departure/ Levels of Concern

Once a pesticide's toxicological profile is determined, EPA identifies toxicological points of departure (POD) and levels of concern to use in evaluating the risk posed by human exposure to the pesticide. For hazards that have a threshold below which there is no appreciable risk, the toxicological POD is used as the basis for derivation of reference values for risk assessment. PODs are developed based on a careful analysis of the doses in each toxicological study to determine the dose at which no adverse effects are observed (the NOAEL) and the lowest dose at which adverse effects of concern are identified (the LOAEL). Uncertainty/ safety factors are used in conjunction with the POD to calculate a safe exposure level – generally referred to as a population-adjusted dose (PAD) or a reference dose (RfD) – and a safe margin of exposure (MOE). For non-threshold risks, the Agency assumes that any amount of exposure will lead to some degree of risk. Thus, the Agency estimates risk in terms of the probability of an occurrence of the adverse effect expected in a lifetime. For more information on the general principles EPA uses in risk characterization and a complete description of the risk assessment process, see *http://www.epa.gov/pesticides/factsheets/riskassess.htm*.

A summary of the toxicological endpoints for PETAE used for human risk assessment is shown in the following table:

SUMMARY OF TOXICOLOGICAL DOSES AND ENDPOINTS FOR PETAE FOR USE IN HUMAN RISK ASSESSMENT

Exposure/Scenario	Point of Departure and Uncertainty/Safety Factors	RfD, PAD, LOC for Risk Assessment	Study and Toxicological Effects
Acute dietary (General population including infants and children)	No appropriate endpoints were identified for acute dietary risk assessment.		

SUMMARY OF TOXICOLOGICAL DOSES AND ENDPOINTS FOR PETAE FOR USE IN HUMAN RISK ASSESSMENT—Continued

Exposure/Scenario	Point of Departure and Uncertainty/Safety Factors	RfD, PAD, LOC for Risk Assessment	Study and Toxicological Effects
Chronic dietary (All populations)	NOAEL = 100 mg/kg/day UF_A = 10x UF_H = 10x FQPA SF = 3x	Chronic RfD = 1 mg/kg/day cPAD = 0.33 mg/kg/day	OECD 422 Reproduction/Developmental Screen in rats (MRID 47600707) LOAEL = 200 mg/kg/day based on mortalities, clinical signs, decreased body weight and/or body weight gain and decreased food consumption in both sexes CAS 7664–38–2
Incidental Oral Short-Term and Intermediate-Term Dermal and Inhalation	NOAEL= 100 mg/kg/day UF_A = 10x UF_H = 10x FQPA SF = 3x (10% Dermal absorption; 100% inhalation and oral toxicity assumed equivalent)	Residential/Occupational LOC for MOE = 300	OECD 422 Reproduction/Developmental Screen in rats (MRID 47600707) LOAEL = 200 mg/kg/day based on mortalities, clinical signs, decreased body weight and/or body weight gain and decreased food consumption in both sexes CAS 7664–38–2
Cancer (Oral, dermal, inhalation)	Classification: No animal toxicity data available for an assessment. Based on SAR analysis, PETAE is not expected to be carcinogenic.		

UF_A = extrapolation from animal to human (interspecies).
UF_H = potential variation in sensitivity among members of the human population (intraspecies).
FQPA SF = Food Quality Protection Act Safety Factor.
PAD = population adjusted dose (a = acute, c = chronic).
RfD = reference dose.
MOE = margin of exposure.
LOC = level of concern.

C. Exposure Assessment

1. *Dietary exposure from food and feed uses.* In evaluating dietary exposure to PETAE, EPA considered exposure under the proposed exemption from the requirement of a tolerance. EPA assessed dietary exposures from PETAE in food as follows:

i. *Acute exposure.* No adverse effect attributable to a single exposure of the PETAE was seen in the toxicity databases; therefore, an acute dietary exposure assessment for the PETAE was not conducted.

ii. *Chronic exposure.* In conducting the chronic dietary exposure assessment, EPA used food consumption information from the United States Department of Agriculture (USDA) 1994–1996 and 1998 Nationwide Continuing Surveys of Food Intake by Individuals (CSFII). As to residue levels in food, no residue data were submitted for PETAE. In the absence of specific residue data, EPA has developed an approach which uses surrogate information to derive upper bound exposure estimates for the subject inert ingredient. Upper bound exposure estimates are based on the highest tolerance for a given commodity from a list of high-use insecticides, herbicides, and fungicides. A complete description of the general approach taken to assess inert ingredient risks in the absence of residue data is contained in the memorandum entitled "Alkyl Amines Polyalkoxylates (Cluster 4): Acute and Chronic Aggregate (Food and Drinking Water) Dietary Exposure and Risk Assessments for the Inerts." (D361707, S. Piper, 2/25/09) and can be found at *http://www.regulations.gov* in docket ID number EPA–HQ–OPP–2008–0738.

In the dietary exposure assessment, the Agency assumed that the residue level of the inert ingredient would be no higher than the highest tolerance for a given commodity. Implicit in this assumption is that there would be similar rates of degradation (if any) between the active and inert ingredient and that the concentration of inert ingredient in the scenarios leading to these highest of tolerances would be no higher than the concentration of the active ingredient.

The Agency believes the assumptions used to estimate dietary exposures lead to an extremely conservative assessment of dietary risk due to a series of compounded conservatisms. First, assuming that the level of residue for an inert ingredient is equal to the level of residue for the active ingredient will overstate exposure. The concentrations of active ingredient in agricultural products are generally at least 50% of the product and often can be much higher. Further, pesticide products rarely have a single inert ingredient; rather there is generally a combination of different inert ingredients used which additionally reduces the concentration of any single inert ingredient in the pesticide product in relation to that of the active ingredient. In the case of the PETAE, EPA made a specific adjustment to the dietary exposure assessment to account for the use limitations of the amount of PETAE that may be in formulations (no more than 20% by weight in pesticide formulations) and assumed that the PETAE are present at the maximum limitation rather than at equal quantities with the active ingredient. This remains a very conservative assumption because surfactants are generally used at levels far below this percentage.

Second, the conservatism of this methodology is compounded by EPA's decision to assume that, for each commodity, the active ingredient which will serve as a guide to the potential level of inert ingredient residues is the active ingredient with the highest tolerance level. This assumption overstates residue values because it would be highly unlikely, given the high number of inert ingredients, that a

single inert ingredient or class of ingredients would be present at the level of the active ingredient in the highest tolerance for every commodity. Finally, a third compounding conservatism is EPA's assumption that all foods contain the inert ingredient at the highest tolerance level. In other words, EPA assumed 100% of all foods are treated with the inert ingredient at the rate and manner necessary to produce the highest residue legally possible for an active ingredient. In summary, EPA chose a very conservative method for estimating what level of inert residue could be on food, and then used this methodology to choose the highest possible residue that could be found on food and assumed that all food contained this residue. No consideration was given to potential degradation between harvest and consumption even though monitoring data shows that tolerance level residues are typically one to two orders of magnitude higher than actual residues in food when distributed in commerce.

Accordingly, although sufficient information to quantify actual residue levels in food is not available, the compounding of these conservative assumptions will lead to a significant exaggeration of actual exposures. EPA does not believe that this approach underestimates exposure in the absence of residue data.

iii. *Cancer*. The Agency used a QSAR database, DEREK11, to determine if there were structural alerts suggestive of carcinogenicity. No structural alerts for carcinogenicity were identified. Therefore, a quantitative dietary exposure assessment was not conducted for the purpose of evaluating cancer risk.

2. *Dietary exposure from drinking water*. For the purpose of the screening level dietary risk assessment to support this request for an exemption from the requirement of a tolerance for PETAE, a conservative drinking water concentration value of 100 parts per billion (ppb) based on screening level modeling was used to assess the contribution to drinking water for the chronic dietary risk assessments for parent compound. These values were directly entered into the dietary exposure model.

3. *From non-dietary exposure*. The term "residential exposure" is used in this document to refer to non-occupational, non-dietary exposure (e.g., for lawn and garden pest control, indoor pest control, termiticides, and flea and tick control on pets). PETAE may be used in inert ingredients in pesticide products that are registered for specific uses that may result in both indoor and outdoor residential exposures.

A screening level residential exposure and risk assessment was conducted for products containing the PETAE as inert ingredients. In this assessment, the Agency selected representative scenarios, based on end-use product application methods and labeled application rates. The residential products are typically formulated as liquids in concentrates or as wettable powders. PETAE has no pesticidal properties, and is added to pesticide formulations for its adjuvant property. PETAE is not generally added to any pesticides intended for indoor use (i.e., where the Agency would typically assess crack and crevice/pet uses). Therefore, EPA assumed no indoor uses exist. Similarly, residential post application dermal and oral exposure assessments were also performed utilizing high end indoor and outdoor exposure scenarios. Further details of this residential exposure and risk analysis can be found at *http://www.regulations.gov* in the memorandum entitled "JITF Inert Ingredients. Residential and Occupational Exposure Assessment Algorithms and Assumptions Appendix for the Human Health Risk Assessments to Support Proposed Exemption from the Requirement of a Tolerance When Used as Inert Ingredients in Pesticide Formulations" (D364751, 5/7/09, Lloyd/LaMay) in docket ID number EPA–HQ–OPP–2008–0710.

4. *Cumulative effects from substances with a common mechanism of toxicity*. Section 408(b)(2)(D)(v) of FFDCA requires that, when considering whether to establish, modify, or revoke a tolerance, the Agency consider "available information" concerning the cumulative effects of a particular pesticide's residues and "other substances that have a common mechanism of toxicity."

EPA has not found PETAE to share a common mechanism of toxicity with any other substances, and PETAE does not appear to produce a toxic metabolite produced by other substances. For the purposes of this tolerance action, therefore, EPA has assumed that PETAE does not have a common mechanism of toxicity with other substances. For information regarding EPA's efforts to determine which chemicals have a common mechanism of toxicity and to evaluate the cumulative effects of such chemicals, see EPA's website at *http://www.epa.gov/pesticides/cumulative*.

D. Safety Factor for Infants and Children

1. *In general*. Section 408(b)(2)(C) of FFDCA provides that EPA shall apply an additional tenfold (10X) margin of safety for infants and children in the case of threshold effects to account for prenatal and postnatal toxicity and the completeness of the database on toxicity and exposure unless EPA determines based on reliable data that a different margin of safety will be safe for infants and children. This additional margin of safety is commonly referred to as the FQPA Safety Factor (SF). In applying this provision, EPA either retains the default value of 10X, or uses a different additional safety factor when reliable data available to EPA support the choice of a different factor.

2. *Prenatal and postnatal sensitivity*. In the case of PETAE, there was no increased susceptibility to the offspring of rats following prenatal and postnatal exposure in the OPPTS Harmonized Test Guideline 870.3650 reproductive/developmental screening study. Decreased litter size and body weight gain in pups was observed at 200 mg/kg/day where maternal/paternal toxicity was manifested based on mortalities, clinical signs, decreased body weight and/or body weight gain and decreased food consumption in male and female rats at 200 mg/kg/day. There is no concern for residual uncertainties because clear NOAELs were established for parental and offspring toxicities.

3. *Conclusion*. EPA has determined that reliable data show the safety of infants and children would be adequately protected if the FQPA SF were reduced to 3X. That decision is based on the following findings:

i. The toxicity data available on the PETAE consists of one OPPTS Harmonized Test Guideline 870.3650 combined repeated dose toxicity study with the reproduction/development toxicity screening test (rat); acute oral, dermal, inhalation skin irritation and sensitization, and eye toxicity data. The other studies were bridged from AAPs since PETAE is a phosphate ester form of AAPs which have been recently assessed by the Agency in docket ID number EPA–HQ–OPP–2008–0738. There was no evidence of immunotoxicity in the database. Furthermore, these compounds do not belong to a class of chemicals that would be expected to be immunotoxic and, there was no evidence that the AAPs are mutagenic or clastogenic.

ii. No quantitative or qualitative increased susceptibility was demonstrated in the offspring in the OPPTS Harmonized Test Guideline

870.3650 combined repeated dose toxicity study with the reproduction/developmental toxicity screening test in rats following prenatal and postnatal exposure.

iii. There are no chronic studies or carcinogenicity studies are available in the database. EPA has considerable information on the general toxicity of surfactants. These compounds are shown to cause local irritation and corrosive effects on membrane. EPA recently assessed the toxicity of AAPs. PETAE is a phosphate ester form of AAPs. The database on AAPs indicates that the effects do not increase in severity over time (4 weeks to 13 weeks). Based on the lack of progression of severity of effects with time along with the considerable similarities of effects across the species tested and the observation that the vast majority of the effects observed were related to local irritation and corrosive effects, EPA concludes that chronic data are unlikely to show significant differences from existing studies. In addition, the concern for chronic effects for PETAE is low based on SAR, DEREK11 analysis and available data on AAPs. Based on the above evidence, EPA concluded that the FQPA factor of 3X for the lack of chronic studies would be adequate and protective.

iv. No treatment-related effects on FOB parameters were observed in the OPPTS Harmonized Test Guideline 870.3650. In addition, no evidence of treatment-related clinical signs of neurotoxicity were observed in the available toxicological studies. EPA concluded that there is no need for a developmental neurotoxicity study or additional UFs to account for neurotoxicity.

v. There are no residual uncertainties identified in the exposure databases. The food and drinking water assessment is not likely to underestimate exposure to any subpopulation, including infants and children. The food exposure assessments are considered to be highly conservative as they are based on the use of the highest tolerance level from the surrogate pesticides for every food, and 100% crop treated is assumed for all crops. EPA also made conservative (protective) assumptions in the ground and surface water modeling used to assess exposure to PETAE in drinking water. These assessments will not underestimate the exposure and risks posed by PETAE. Based on the above considerations, EPA has reduced the FQPA factor to 3X.

E. Aggregate Risks and Determination of Safety

Determination of safety section. EPA determines whether acute and chronic dietary pesticide exposures are safe by comparing aggregate exposure estimates to the acute PAD (aPAD) and chronic PAD (cPAD). For linear cancer risks, EPA calculates the lifetime probability of acquiring cancer given the estimated aggregate exposure. Short-term, intermediate-term, and chronic-term risks are evaluated by comparing the estimated aggregate food, water, and residential exposure to the appropriate PODs to ensure that an adequate MOE exists.

1. *Acute risk*. An acute aggregate risk assessment takes into account acute exposure estimates from dietary consumption of food and drinking water. No adverse effect resulting from a single oral exposure was identified, and no acute dietary endpoint was selected. Therefore, PETAE is not expected to pose an acute risk.

2. *Chronic risk*. A chronic aggregate risk assessment takes into account exposure estimates from chronic dietary consumption of food and drinking water. Using the exposure assumptions discussed in this unit for chronic exposure and the use limitations of not more than 20% by weight in pesticide formulations, the chronic dietary exposure from food and water to PETAE is 23.2% of the cPAD for the U.S. population and 75.6% of the cPAD for children 1 to 2 years old, the most highly exposed population subgroup.

3. *Short-term risk*. Short-term aggregate exposure takes into account short-term residential exposure plus chronic exposure to food and water (considered to be a background exposure level).

PETAE is currently used as an inert ingredient in pesticide products that are registered for uses that could result in short-term residential exposure, and the Agency has determined that it is appropriate to aggregate chronic exposure through food and water with short-term residential exposures to PETAE.

Using the exposure assumptions described in this unit for short-term exposures, EPA has concluded the combined short-term food, water, and residential exposures result in aggregate MOEs of 1,040 and 1,147 for adult males and females, respectively. Adult residential exposure combines high end dermal and inhalation handler exposure from indoor hand wiping with a high end post-application dermal exposure from contact with treated lawns. EPA has concluded the combined short-term aggregated food, water, and residential exposures result in an aggregate MOE of 600 for children. Children's residential exposure includes total exposures associated with contact with treated lawns (dermal and hand-to-mouth exposures). Because EPA's level of concern for PETAE is a MOE of 300 or below, these MOEs are not of concern.

4. *Intermediate-term risk*. Intermediate-term aggregate exposure takes into account intermediate-term residential exposure plus chronic exposure to food and water (considered to be a background exposure level).

PETAE is currently used as an inert ingredient in pesticide products that are registered for uses that could result in intermediate-term residential exposure, and the Agency has determined that it is appropriate to aggregate chronic exposure through food and water with intermediate-term residential exposures to PETAE.

Using the exposure assumptions described in this unit for intermediate-term exposures, EPA has concluded that the combined intermediate-term food, water, and residential exposures result in aggregate MOEs of 1,040 and 1,147 for adult males and females, respectively. Adult residential exposure includes high end post application dermal exposure from contact with treated lawns. EPA has concluded the combined intermediate-term aggregated food, water, and residential exposures result in an aggregate MOE of 680 for children. Children's residential exposure includes total exposures associated with contact with treated lawns (dermal and hand-to-mouth exposures). Because EPA's LOC for PETAE is a MOE of 300 or below, these MOEs are not of concern.

5. *Aggregate cancer risk for U.S. population*. The Agency has not identified any concerns for carcinogenicity relating to PETAE.

6. *Determination of safety*. Based on these risk assessments, EPA concludes that there is a reasonable certainty that no harm will result to the general population or to infants and children from aggregate exposure to PETAE residues.

V. Other Considerations

A. Analytical Enforcement Methodology

An analytical method is not required for enforcement purposes since the Agency is establishing an exemption from the requirement of a tolerance without any numerical limitation.

B. International Residue Limits

The Agency is not aware of any country requiring a tolerance for PETAE

nor have any CODEX Maximum Residue Levels (MRLs) been established for any food crops at this time.

VI. Conclusions

Therefore, an exemption from the requirement of a tolerance is established under 40 CFR 180.920 for PETAE (CAS Reg. No. 68308–48–5) when used as an inert ingredient (as surfactants, related adjuvants of surfactants) in pesticide formulations applied to growing crops at a maximum of 20% by weight in pesticide formulations.

VII. Statutory and Executive Order Reviews

This final rule establishes a tolerance under section 408(d) of FFDCA in response to a petition submitted to the Agency. The Office of Management and Budget (OMB) has exempted these types of actions from review under Executive Order 12866, entitled *Regulatory Planning and Review* (58 FR 51735, October 4, 1993). Because this final rule has been exempted from review under Executive Order 12866, this final rule is not subject to Executive Order 13211, entitled *Actions Concerning Regulations That Significantly Affect Energy Supply, Distribution, or Use* (66 FR 28355, May 22, 2001) or Executive Order 13045, entitled *Protection of Children from Environmental Health Risks and Safety Risks* (62 FR 19885, April 23, 1997). This final rule does not contain any information collections subject to OMB approval under the Paperwork Reduction Act (PRA), 44 U.S.C. 3501 *et seq.*, nor does it require any special considerations under Executive Order 12898, entitled *Federal Actions to Address Environmental Justice in Minority Populations and Low-Income Populations* (59 FR 7629, February 16, 1994).

Since tolerances and exemptions that are established on the basis of a petition under section 408(d) of FFDCA, such as the tolerance in this final rule, do not require the issuance of a proposed rule, the requirements of the Regulatory Flexibility Act (RFA) (5 U.S.C. 601 *et seq.*) do not apply.

This final rule directly regulates growers, food processors, food handlers, and food retailers, not States or tribes, nor does this action alter the relationships or distribution of power and responsibilities established by Congress in the preemption provisions of section 408(n)(4) of FFDCA. As such, the Agency has determined that this action will not have a substantial direct effect on States or tribal governments, on the relationship between the national government and the States or tribal governments, or on the distribution of power and responsibilities among the various levels of government or between the Federal Government and Indian tribes. Thus, the Agency has determined that Executive Order 13132, entitled *Federalism* (64 FR 43255, August 10, 1999) and Executive Order 13175, entitled *Consultation and Coordination with Indian Tribal Governments* (65 FR 67249, November 9, 2000) do not apply to this final rule. In addition, this final rule does not impose any enforceable duty or contain any unfunded mandate as described under Title II of the Unfunded Mandates Reform Act of 1995 (UMRA) (Public Law 104–4).

This action does not involve any technical standards that would require Agency consideration of voluntary consensus standards pursuant to section 12(d) of the National Technology Transfer and Advancement Act of 1995 (NTTAA), Public Law 104–113, section 12(d) (15 U.S.C. 272 note).

VIII. Congressional Review Act

The Congressional Review Act, 5 U.S.C. 801 *et seq.*, generally provides that before a rule may take effect, the agency promulgating the rule must submit a rule report to each House of the Congress and to the Comptroller General of the United States. EPA will submit a report containing this rule and other required information to the U.S. Senate, the U.S. House of Representatives, and the Comptroller General of the United States prior to publication of this final rule in the **Federal Register**. This final rule is not a "major rule" as defined by 5 U.S.C. 804(2).

List of Subjects in 40 CFR Part 180

Environmental protection, Administrative practice and procedure, Agricultural commodities, Pesticides and pests, Reporting and recordkeeping requirements.

Dated: April 15, 2010.

G. Jeffrey Herndon,

Acting Director, Registration Division, Office of Pesticide Programs.

■ Therefore, 40 CFR chapter I is amended as follows:

PART 180—[AMENDED]

■ 1. The authority citation for part 180 continues to read as follows:

Authority: 21 U.S.C. 321(q), 346a and 371.

■ 2. In §180.920, the table is amended by adding alphabetically the following inert ingredient to read as follows:

§ 180.920 Inert ingredients used pre-harvest; exemptions from the requirement of a tolerance.

* * * * *

Inert ingredients	Limits	Uses
* * * * *		
Tallowamine, ethoxylated, mixture of dihydrogen phosphate and monohydrogen phosphate esters and the corresponding ammonium, calcium, potassium, and sodium salts of the phosphate esters, where the poly(oxyethylene) content averages 2–20 moles (CAS Reg. No. 68308–48–5)	Not to exceed 20% of pesticide formulation	Surfactants, related adjuvants of surfactants
* * * * *		

[FR Doc. 2010–9834 Filed 4–27–10; 8:45 am]

BILLING CODE 6560–50–S

ENVIRONMENTAL PROTECTION AGENCY

40 CFR Part 180

[EPA–HQ–OPP–2009–0551; FRL–8818–8]

Cyprodinil; Pesticide Tolerances

AGENCY: Environmental Protection Agency (EPA).

ACTION: Final rule.

SUMMARY: This regulation establishes a tolerance for residues of cyprodinil in or on canola, seed. Syngenta Crop Protection, Inc. requested these tolerances under the Federal Food, Drug, and Cosmetic Act (FFDCA).

DATES: This regulation is effective April 28, 2010. Objections and requests for hearings must be received on or before June 28, 2010, and must be filed in accordance with the instructions

provided in 40 CFR part 178 (see also Unit I.C. of the **SUPPLEMENTARY INFORMATION**).

ADDRESSES: EPA has established a docket for this action under docket identification (ID) number EPA–HQ–OPP–2009–0551. All documents in the docket are listed in the docket index available at *http://www.regulations.gov*. Although listed in the index, some information is not publicly available, e.g., Confidential Business Information (CBI) or other information whose disclosure is restricted by statute. Certain other material, such as copyrighted material, is not placed on the Internet and will be publicly available only in hard copy form. Publicly available docket materials are available in the electronic docket at *http://www.regulations.gov*, or, if only available in hard copy, at the OPP Regulatory Public Docket in Rm. S–4400, One Potomac Yard (South Bldg.), 2777 S. Crystal Dr., Arlington, VA. The Docket Facility is open from 8:30 a.m. to 4 p.m., Monday through Friday, excluding legal holidays. The Docket Facility telephone number is (703) 305–5805.

FOR FURTHER INFORMATION CONTACT: Lisa Jones, Registration Division, Office of Pesticide Programs, Environmental Protection Agency, 1200 Pennsylvania Ave., NW., Washington, DC 20460–0001; telephone number: (703) 308–9424; e-mail address: *jones.lisa@epa.gov*.

SUPPLEMENTARY INFORMATION:

I. General Information

A. Does this Action Apply to Me?

You may be potentially affected by this action if you are an agricultural producer, food manufacturer, or pesticide manufacturer. Potentially affected entities may include, but are not limited to those engaged in the following activities:

- Crop production (NAICS code 111).
- Animal production (NAICS code 112).
- Food manufacturing (NAICS code 311).
- Pesticide manufacturing (NAICS code 32532).

This listing is not intended to be exhaustive, but rather to provide a guide for readers regarding entities likely to be affected by this action. Other types of entities not listed in this unit could also be affected. The North American Industrial Classification System (NAICS) codes have been provided to assist you and others in determining whether this action might apply to certain entities. If you have any questions regarding the applicability of this action to a particular entity, consult the person listed under **FOR FURTHER INFORMATION CONTACT**.

B. How Can I Get Electronic Access to Other Related Information?

You may access a frequently updated electronic version of 40 CFR part 180 through the Government Printing Office's e-CFR cite at *http://www.gpoaccess.gov/ecfr*. To access the OPPTS harmonized test guidelines referenced in this document electronically, please go to *http://www.epa.gov/oppts* and select "Test Methods and Guidelines."

C. Can I File an Objection or Hearing Request?

Under section 408(g) of FFDCA, 21 U.S.C. 346a, any person may file an objection to any aspect of this regulation and may also request a hearing on those objections. You must file your objection or request a hearing on this regulation in accordance with the instructions provided in 40 CFR part 178. To ensure proper receipt by EPA, you must identify docket ID number EPA–HQ–OPP–2009–0551 in the subject line on the first page of your submission. All objections and requests for a hearing must be in writing, and must be received by the Hearing Clerk on or before June 28, 2010. Addresses for mail and hand delivery of objections and hearing requests are provided in 40 CFR 178.25(b).

In addition to filing an objection or hearing request with the Hearing Clerk as described in 40 CFR part 178, please submit a copy of the filing that does not contain any CBI for inclusion in the public docket that is described in **ADDRESSES**. Information not marked confidential pursuant to 40 CFR part 2 may be disclosed publicly by EPA without prior notice. Submit this copy, identified by docket ID number EPA–HQ–OPP–2009–0551, by one of the following methods:

- *Federal eRulemaking Portal*: *http://www.regulations.gov*. Follow the on-line instructions for submitting comments.
- *Mail*: Office of Pesticide Programs (OPP) Regulatory Public Docket (7502P), Environmental Protection Agency, 1200 Pennsylvania Ave., NW., Washington, DC 20460–0001.
- *Delivery*: OPP Regulatory Public Docket (7502P), Environmental Protection Agency, Rm. S–4400, One Potomac Yard (South Bldg.), 2777 S. Crystal Dr., Arlington, VA. Deliveries are only accepted during the Docket Facility's normal hours of operation (8:30 a.m. to 4 p.m., Monday through Friday, excluding legal holidays). Special arrangements should be made for deliveries of boxed information. The Docket Facility telephone number is (703) 305–5805.

II. Petition for Tolerance

In the **Federal Register** of September 4, 2009 (74 FR 45848) (FRL–8434–4), EPA issued a notice pursuant to section 408(d)(3) of FFDCA, 21 U.S.C. 346a(d)(3), announcing the filing of a pesticide petition (PP 8E7502) by Syngenta Crop Protection, Inc., P.O. Box 18300, Greensboro, NC, 27409. The petition requested that 40 CFR 180.532 be amended by establishing tolerances for residues of the fungicide cyprodinil, in or on canola, seed, imported at 0.03 parts per million (ppm). That notice referenced a summary of the petition prepared by Syngenta Crop Protection, Inc., the registrant, which is available to the public in the docket, *http://www.regulations.gov*. There were no comments received in response to the notice of filing.

III. Aggregate Risk Assessment and Determination of Safety

Section 408(b)(2)(A)(i) of FFDCA allows EPA to establish a tolerance (the legal limit for a pesticide chemical residue in or on a food) only if EPA determines that the tolerance is "safe." Section 408(b)(2)(A)(ii) of FFDCA defines "safe" to mean that "there is a reasonable certainty that no harm will result from aggregate exposure to the pesticide chemical residue, including all anticipated dietary exposures and all other exposures for which there is reliable information." This includes exposure through drinking water and in residential settings, but does not include occupational exposure. Section 408(b)(2)(C) of FFDCA requires EPA to give special consideration to exposure of infants and children to the pesticide chemical residue in establishing a tolerance and to "ensure that there is a reasonable certainty that no harm will result to infants and children from aggregate exposure to the pesticide chemical residue...."

Consistent with section 408(b)(2)(D) of FFDCA, and the factors specified in section 408(b)(2)(D) of FFDCA, EPA has reviewed the available scientific data and other relevant information in support of this action. EPA has sufficient data to assess the hazards of and to make a determination on aggregate exposure for cyprodinil including exposure resulting from the tolerances established by this action. EPA's assessment of exposures and risks associated with cyprodinil follows.

A. Toxicological Profile

EPA has evaluated the available toxicity data and considered its validity, completeness, and reliability as well as the relationship of the results of the studies to human risk. EPA has also considered available information concerning the variability of the sensitivities of major identifiable subgroups of consumers, including infants and children.

Cyprodinil has low acute toxicity via the oral, dermal, and inhalation routes. Cyprodinil is mildly irritating to the eyes and negligibly irritating to the skin. It is a dermal sensitizer.

The major target organs of cyprodinil are the liver in both rats and mice and the kidney in rats. Liver effects observed consistently in subchronic and chronic studies in rats and mice include increased liver weights, increases in serum clinical chemistry parameters associated with adverse effects on liver function, hepatocyte hypertrophy, and hepatocellular necrosis. Adverse kidney effects include tubular lesions and inflammation following subchronic exposure of male rats. The hematopoietic system also appeared to be a target of cyprodinil, causing mild anemia in rats exposed subchronically. Chronic effects in dogs were limited to decreased body-weight gain, decreased food consumption and decreased food efficiency. There was no evidence of increased susceptibility in the developmental rat or rabbit study following *in utero* exposure or in the 2–generation reproduction study following prenatal or postnatal exposure. No neurotoxicity studies with cyprodinil are available. However, there was no evidence of neuropathological effects in the available oral-toxicity studies.

There was no evidence of carcinogenic potential in either the rat chronic toxicity/carcinogenicity or mouse carcinogenicity studies and no concern for mutagenicity.

Toxicological points of departure (PODs) were selected for dietary and drinking water exposure scenarios. A POD for acute dietary exposure was selected for the population subgroup females 13 to 49 years old based on a developmental toxicity study in rabbits. No acute endpoint was identified for the remaining population subgroups. The POD for chronic dietary exposure was selected from a chronic/carcinogenicity feeding study in rats.

Specific information on the studies received and the nature of the adverse effects caused by cyprodinil as well as the no-observed-adverse-effect-level (NOAEL) and the lowest-observed-adverse-effect-level (LOAEL) from the toxicity studies can be found at *http://www.regulations.gov* in document "Cyprodinil Human Health Risk Assessment for Proposed New Use of Cyprodinil on Imported Canola Seed", pp. 24 through 27, in docket ID number EPA–HQ–OPP–2009–0551.

B. Toxicological Points of Departure/Levels of Concern

Once a pesticide's toxicological profile is determined, EPA identifies the toxicological POD and levels of concern (LOC) to use in evaluating the risk posed by human exposure to the pesticide. For hazards that have a threshold below which there is no appreciable risk, the toxicological POD is used as the basis for derivation of reference values for risk assessment. PODs are developed based on a careful analysis of the doses in each toxicological study to determine the dose at which no adverse effects are observed (the NOAEL) and the lowest dose at which adverse effects of concern are identified (the LOAEL). Uncertainty/safety factors are used in conjunction with the POD to calculate a safe exposure level – generally referred to as a population-adjusted dose (PAD) or a reference dose (RfD) – and a safe margin of exposure (MOE). For non-threshold risks, the Agency assumes that any amount of exposure will lead to some degree of risk. Thus, the Agency estimates risk in terms of the probability of an occurrence of the adverse effect expected in a lifetime. For more information on the general principles EPA uses in risk characterization and a complete description of the risk assessment process, see *http://www.epa.gov/pesticides/factsheets/riskassess.htm*.

A summary of the toxicological endpoints for cyprodinil used for human risk assessment is shown in the Table of this unit.

TABLE — SUMMARY OF TOXICOLOGICAL DOSES AND ENDPOINTS FOR CYPRODINIL FOR USE IN HUMAN RISK ASSESSMENT

Exposure/Scenario	Point of Departure and Uncertainty/Safety Factors	RfD, PAD, LOC for Risk Assessment	Study and Toxicological Effects
Acute dietary (Females 13–50 years of age)	NOAEL = 150 milligrams/kilograms/day (mg/kg/day) UF_A = 10x UF_H = 10x FQPA SF = 1x	Acute RfD = 1.5 mg/kg/day aPAD = 1.5 mg/kg/day	Developmental Toxicity - rabbit LOAEL = 400 mg/kg/day based on slight increase of litters showing extra ribs
Chronic dietary All populations	NOAEL= 2.7 mg/kg/day UF_A = 10x UF_H = 10x FQPA SF = 1x	Chronic RfD = 0.027 mg/kg/day cPAD = 0.027 mg/kg/day	2–Year Chronic Toxicity/Carcinogenicity - rat LOAEL = 35.6 mg/kg/day based on degenerative liver lesions (spongiosis hepatic) in males
Cancer all routes	Not likely to be carcinogenic in humans.		

UF_A = extrapolation from animal to human (interspecies). UF_H = potential variation in sensitivity among members of the human population (intraspecies). UF_L = use of a LOAEL to extrapolate a NOAEL. UF_S = use of a short-term study for long-term risk assessment. UF_{DB} = to account for the absence of data or other data deficiency. FQPA SF = Food Quality Protection Act Safety Factor. PAD = population adjusted dose (a = acute, c = chronic). RfD = reference dose. MOE = margin of exposure. LOC = level of concern.

C. Exposure Assessment

1. *Dietary exposure from food and feed uses*. In evaluating dietary exposure to cyprodinil, EPA considered exposure under the petitioned-for tolerances as well as all existing cyprodinil tolerances in 40 CFR 180.532. EPA assessed dietary exposures from cyprodinil in food as follows:

i. *Acute exposure*. Quantitative acute dietary exposure and risk assessments are performed for a food-use pesticide, if a toxicological study has indicated the possibility of an effect of concern occurring as a result of a 1–day or single exposure.

Such effects were identified for cyprodinil. In estimating acute dietary exposure, EPA used food consumption information from the United States Department of Agriculture (USDA) 1994–1996 and 1998 Nationwide Continuing Surveys of Food Intake by Individuals (CSFII). As to residue levels in food, EPA did not use anticipated residue and/or percent crop treated (PCT) information in the acute dietary assessment for cyprodinil. Tolerance level residues and 100 PCT were assumed for all existing and proposed food commodities.

ii. *Chronic exposure*. In conducting the chronic dietary exposure assessment EPA used the food consumption data from the USDA 1994–1996 and 1998 CSFII. As to residue levels in food, EPA did not use anticipated residue and/or PCT information in the chronic dietary assessment for cyprodinil. Tolerance level residues and 100 PCT were assumed for all existing and proposed food commodities.

iii. *Cancer*. EPA determines whether quantitative cancer exposure and risk assessments are appropriate for a food-use pesticide based on the weight of the evidence from cancer studies and other relevant data. Cancer risk is quantified using a linear or nonlinear approach. If sufficient information on the carcinogenic mode of action is available, a threshold or non-linear approach is used and a cancer RfD is calculated based on an earlier noncancer key event. If carcinogenic mode of action data are not available, or if the mode of action data determines a mutagenic mode of action, a default linear cancer slope factor approach is utilized.

Based on the data summarized in Unit III.A., EPA has concluded that cyprodinil is not likely to be carcinogenic to humans. Therefore, a dietary exposure assessment for the purpose of assessing cancer risk is unnecessary.

iv. *Anticipated residue and PCT information*. EPA did not use anticipated residue and/or PCT information in the dietary assessment for cyprodinil. Tolerance level residues and/or 100 PCT were assumed for all food commodities.

2. *Dietary exposure from drinking water*. The Agency used screening level water exposure models in the dietary exposure analysis and risk assessment for cyprodinil in drinking water. These simulation models take into account data on the physical, chemical, and fate/transport characteristics of cyprodinil. Further information regarding EPA drinking water models used in pesticide exposure assessment can be found at *http://www.epa.gov/oppefed1/models/water/index.htm*.

EPA estimated the surface water exposure levels using the the Pesticide Root Zone Model/Exposure Analysis Modeling System Ground water estimates were calculated using the Tier 1 Screening Concentration in Ground Water model. Estimated Drinking Water Concentrations for cyprodinil and its metabolite CGA–249287 were derived based on a maximum application rate of 0.469 pound active ingredient / per acre (lb a.i./A (applied 3 times/season)) on grapes assuming minimum intervals between application. The concentrations have been adjusted with the Percent Crop Area (PCA) of 0.87 for a national assessment.

Estimated drinking water concentrations of cyprodinil are:

i. 35 parts per billion (ppb) for surface water and 0.11 ppb for ground water for acute exposures; and

ii. 20 ppb for surface water and 0.11 ppb for ground water for chronic non-cancer exposures.

Modeled estimates of drinking water concentrations were directly entered into the dietary exposure model. For acute dietary risk assessment, the water concentration value of 35 ppb was used to assess the contribution to drinking water. For chronic dietary risk assessment, the water concentration of value 20 ppb was used to assess the contribution to drinking water.

3. *From non-dietary exposure*. The term "residential exposure" is used in this document to refer to non-occupational, non-dietary exposure (e.g., for lawn and garden pest control, indoor pest control, termiticides, and flea and tick control on pets). Cyprodinil is not registered for any specific use patterns that would result in residential exposure.

4. *Cumulative effects from substances with a common mechanism of toxicity*. Section 408(b)(2)(D)(v) of FFDCA requires that, when considering whether to establish, modify, or revoke a tolerance, the Agency consider "available information" concerning the cumulative effects of a particular pesticide's residues and "other substances that have a common mechanism of toxicity."

EPA does not have, at this time, available data to determine whether cyprodinil has a common mechanism of toxicity with other substances. Unlike other pesticides for which EPA has followed a cumulative risk approach based on a common mechanism of toxicity, EPA has not made a common mechanism of toxicity finding as to cyprodinil and any other substances and, cyprodinil does not appear to produce a toxic metabolite produced by other substances which have tolerances in the U. S. For the purposes of this tolerance reassessment action, therefore, EPA has not assumed that cyprodinil has a common mechanism of toxicity with other substances. For information regarding EPA's efforts to determine which chemicals have a common mechanism of toxicity and to evaluate the cumulative effects of such chemicals, see the policy statements released by EPA's OPP concerning common mechanism determinations and procedures for cumulating effects from substances found to have a common mechanism on EPA's website at *http://www.epa.gov/fedrgstr/EPA_PEST/2002/January/Day_16/*.

D. Safety Factor for Infants and Children

1. *In general*. Section 408(b)(2)(C) of FFDCA provides that EPA shall apply an additional tenfold (10X) margin of safety for infants and children in the case of threshold effects to account for prenatal and postnatal toxicity and the completeness of the database on toxicity and exposure unless EPA determines based on reliable data that a different margin of safety will be safe for infants and children. This additional margin of safety is commonly referred to as the FQPA Safety Factor (SF). In applying this provision, EPA either retains the default value of 10X, or uses a different additional safety factor when reliable data available to EPA support the choice of a different factor.

2. *Prenatal and postnatal sensitivity*. No increase in susceptibility was seen in developmental toxicity studies in rat and rabbit or reproductive toxicity studies in the rat. Toxicity to offspring was observed at dose levels the same or greater than those causing maternal or parental toxicity. Based on the results of developmental and reproductive toxicity studies, there is not a concern for increased qualitative and/or quantitative susceptibility following *in utero* exposure to cyprodinil.

3. *Conclusion*. EPA has determined that reliable data show the safety of infants and children would be adequately protected if the FQPA SF were reduced to 1X. That decision is based on the following findings:

i. The toxicity database for cyprodinil is complete except for a Neurotoxicity Battery (870.6200 a and b) and an Immunotoxicity Study (870.7800) which

are required under the revised 40 CFR part 158 Toxicology Data Requirements. Based on the results of the available toxicity studies for cyprodinil, however, there is no evidence of neurotoxicity or immunotoxicity, and EPA does not believe that these required studies will demonstrate that the PADs need to be lowered.

ii. There is no indication that cyprodinil is a neurotoxic chemical and there is no need for a developmental neurotoxicity study or additional UFs to account for neurotoxicity.

iii. There is no evidence that cyprodinil results in increased susceptibility in *in utero* rats or rabbits in the prenatal developmental studies or in young rats in the 2–generation reproduction study.

iv. There are no residual uncertainties identified in the exposure databases. EPA made conservative (protective) assumptions in estimating dietary exposure and in the and drinking water modeling used to assess exposure to cyprodinil in drinking water. These assessments will not underestimate the exposure and risks posed by cyprodinil.

E. Aggregate Risks and Determination of Safety

EPA determines whether acute and chronic dietary pesticide exposures are safe by comparing aggregate exposure estimates to the acute PAD (aPAD) and chronic PAD (cPAD). For linear cancer risks, EPA calculates the lifetime probability of acquiring cancer given the estimated aggregate exposure. Short-term, intermediate-term, and chronic-term risks are evaluated by comparing the estimated aggregate food, water, and residential exposure to the appropriate PODs to ensure that an adequate MOE exists.

1. *Acute risk*. Using the exposure assumptions discussed in this unit for acute exposure, the acute dietary exposure from food and water to cyprodinil will occupy 4% of the aPAD for females 13 to 49 years old, the population group receiving the greatest exposure.

2. *Chronic risk*. Using the exposure assumptions described in this unit for chronic exposure, EPA has concluded that chronic exposure to cyprodinil from food and water will utilize 70% of the cPAD for children 1 to 2 years old, the population group receiving the greatest exposure. There are no residential uses for cyprodinil.

3. *Aggregate cancer risk for U.S. population*. Based on the lack of evidence of carcinogenicity in mice and rats at doses that were judged to be adequate to assess the carcinogenic potential, cyprodinil is not expected to pose a cancer risk to humans.

4. *Determination of safety*. Based on these risk assessments, EPA concludes that there is a reasonable certainty that no harm will result to the general population, or to infants and children from aggregate exposure to cyprodinil residues.

IV. Other Considerations

A. Analytical Enforcement Methodology

Adequate enforcement methodology (namely, high performance liquid chromatography with ultraviolet detector (HPLC/UV)) is available to enforce the tolerance expression on plant commodities. In addition, a high performance liquid chromatography with mass spectrometry (HPLC/MS) method (Method No. GRM010.01A) is available for determining residues of cyprodinil and its metabolite CGA–304075 (free+conjugated) in livestock commodities.

These methods may be requested from: Chief, Analytical Chemistry Branch, Environmental Science Center, 701 Mapes Rd., Ft. Meade, MD 20755–5350; telephone number: (410) 305–2905; e-mail address: *residuemethods@epa.gov*.

B. International Residue Limits

There are no established or proposed Codex, Canadian or Mexican MRLs for cyprodinil on canola.

V. Conclusion

Therefore, a tolerance is established for residues of cyprodinil, in or on canola, seed, at 0.03 ppm.

VI. Statutory and Executive Order Reviews

This final rule establishes tolerances under section 408(d) of FFDCA in response to a petition submitted to the Agency. The Office of Management and Budget (OMB) has exempted these types of actions from review under Executive Order 12866, entitled *Regulatory Planning and Review* (58 FR 51735, October 4, 1993). Because this final rule has been exempted from review under Executive Order 12866, this final rule is not subject to Executive Order 13211, entitled *Actions Concerning Regulations That Significantly Affect Energy Supply, Distribution, or Use* (66 FR 28355, May 22, 2001) or Executive Order 13045, entitled *Protection of Children from Environmental Health Risks and Safety Risks* (62 FR 19885, April 23, 1997). This final rule does not contain any information collections subject to OMB approval under the Paperwork Reduction Act (PRA), 44 U.S.C. 3501 *et seq.*, nor does it require any special considerations under Executive Order 12898, entitled *Federal Actions to Address Environmental Justice in Minority Populations and Low-Income Populations* (59 FR 7629, February 16, 1994).

Since tolerances and exemptions that are established on the basis of a petition under section 408(d) of FFDCA, such as the tolerance in this final rule, do not require the issuance of a proposed rule, the requirements of the Regulatory Flexibility Act (RFA) (5 U.S.C. 601 *et seq.*) do not apply.

This final rule directly regulates growers, food processors, food handlers, and food retailers, not States or tribes, nor does this action alter the relationships or distribution of power and responsibilities established by Congress in the preemption provisions of section 408(n)(4) of FFDCA. As such, the Agency has determined that this action will not have a substantial direct effect on States or tribal governments, on the relationship between the national government and the States or tribal governments, or on the distribution of power and responsibilities among the various levels of government or between the Federal Government and Indian tribes. Thus, the Agency has determined that Executive Order 13132, entitled *Federalism* (64 FR 43255, August 10, 1999) and Executive Order 13175, entitled *Consultation and Coordination with Indian Tribal Governments* (65 FR 67249, November 9, 2000) do not apply to this final rule. In addition, this final rule does not impose any enforceable duty or contain any unfunded mandate as described under Title II of the Unfunded Mandates Reform Act of 1995 (UMRA) (Public Law 104–4).

This action does not involve any technical standards that would require Agency consideration of voluntary consensus standards pursuant to section 12(d) of the National Technology Transfer and Advancement Act of 1995 (NTTAA), Public Law 104–113, section 12(d) (15 U.S.C. 272 note).

VII. Congressional Review Act

The Congressional Review Act, 5 U.S.C. 801 *et seq.*, generally provides that before a rule may take effect, the agency promulgating the rule must submit a rule report to each House of the Congress and to the Comptroller General of the United States. EPA will submit a report containing this rule and other required information to the U.S. Senate, the U.S. House of Representatives, and the Comptroller General of the United States prior to publication of this final rule in the **Federal Register**. This final rule is not

a "major rule" as defined by 5 U.S.C. 804(2).

List of Subjects in 40 CFR Part 180

Environmental protection, Administrative practice and procedure, Agricultural commodities, Pesticides and pests, Reporting and recordkeeping requirements.

Dated: April 15, 2010.

G. Jeffery Herndon,

Acting Director, Registration Division, Office of Pesticide Programs.

■ Therefore, 40 CFR chapter I is amended as follows:

PART 180—[AMENDED]

■ 1. The authority citation for part 180 continues to read as follows:

Authority: 21 U.S.C. 321(q), 346a and 371.

■ 2. Section 180.532, in paragraph (a), alphabetically add the following commoditiy to the table to read as follows:

§ 180.532 Cyprodinil; tolerances for residues.

(a) * * *

Commodity	Parts per million
* * *	* *
Canola, seed[1]	0.03
* * *	* *

[1] Import only

* * * * *

[FR Doc. 2010–9835 Filed 4–27–10; 8:45 am]

BILLING CODE 6560–50–S

ENVIRONMENTAL PROTECTION AGENCY

40 CFR Part 180

[EPA–HQ–OPP–2008–0772; FRL–8818–5]

Imidacloprid; Pesticide Tolerances

AGENCY: Environmental Protection Agency (EPA).

ACTION: Final rule.

SUMMARY: This regulation establishes tolerances for combined residues of imidacloprid in or on vegetables, bulb, group 3; cereal grains, group 15 and cereal grains, forage, fodder and straw, group 16. This regulation also deletes tolerances for various commodities and tolerances from direct/inadvertent residues on cereal grains, group 15 and cereal grains, forage, fodder and straw, group 16, as they will be superseded by group tolerances. Bayer CropScience requested these tolerances under the Federal Food, Drug, and Cosmetic Act (FFDCA).

DATES: This regulation is effective April 28, 2010. Objections and requests for hearings must be received on or before June 28, 2010, and must be filed in accordance with the instructions provided in 40 CFR part 178 (see also Unit I.C. of the **SUPPLEMENTARY INFORMATION**).

ADDRESSES: EPA has established a docket for this action under docket identification (ID) number EPA–HQ–OPP–2008–0772. All documents in the docket are listed in the docket index available at *http://www.regulations.gov*. Although listed in the index, some information is not publicly available, e.g., Confidential Business Information (CBI) or other information whose disclosure is restricted by statute. Certain other material, such as copyrighted material, is not placed on the Internet and will be publicly available only in hard copy form. Publicly available docket materials are available in the electronic docket at *http://www.regulations.gov*, or, if only available in hard copy, at the OPP Regulatory Public Docket in Rm. S–4400, One Potomac Yard (South Bldg.), 2777 S. Crystal Dr., Arlington, VA. The Docket Facility is open from 8:30 a.m. to 4 p.m., Monday through Friday, excluding legal holidays. The Docket Facility telephone number is (703) 305–5805.

FOR FURTHER INFORMATION CONTACT: Kable Bo Davis, Registration Division (7505P), Office of Pesticide Programs, Environmental Protection Agency, 1200 Pennsylvania Ave., NW., Washington, DC 20460–0001; telephone number: (703) 306–0415; e-mail address: davis.kable@*epa.gov*.

SUPPLEMENTARY INFORMATION:

I. General Information

A. Does this Action Apply to Me?

You may be potentially affected by this action if you are an agricultural producer, food manufacturer, or pesticide manufacturer. Potentially affected entities may include, but are not limited to those engaged in the following activities:

- Crop production (NAICS code 111).
- Animal production (NAICS code 112).
- Food manufacturing (NAICS code 311).
- Pesticide manufacturing (NAICS code 32532).

This listing is not intended to be exhaustive, but rather to provide a guide for readers regarding entities likely to be affected by this action. Other types of entities not listed in this unit could also be affected. The North American Industrial Classification System (NAICS) codes have been provided to assist you and others in determining whether this action might apply to certain entities. If you have any questions regarding the applicability of this action to a particular entity, consult the person listed under **FOR FURTHER INFORMATION CONTACT**.

B. How Can I Access Electronic Copies of this Document?

You may access a frequently updated electronic version of EPA's tolerance regulations at 40 CFR part 180 through the Government Printing Office's e-CFR cite at *http://www.gpoaccess.gov/ecfr*.

C. Can I File an Objection or Hearing Request?

Under section 408(g) of FFDCA, 21 U.S.C. 346a, any person may file an objection to any aspect of this regulation and may also request a hearing on those objections. You must file your objection or request a hearing on this regulation in accordance with the instructions provided in 40 CFR part 178. To ensure proper receipt by EPA, you must identify docket ID number EPA–HQ–OPP–2008–0772 in the subject line on the first page of your submission. All requests must be in writing, and must be mailed or delivered to the Hearing Clerk as required by 40 CFR part 178 on or before June 28, 2010.

In addition to filing an objection or hearing request with the Hearing Clerk as described in 40 CFR part 178, please submit a copy of the filing that does not contain any CBI for inclusion in the public docket that is described in **ADDRESSES**. Information not marked confidential pursuant to 40 CFR part 2 may be disclosed publicly by EPA without prior notice. Submit this copy, identified by docket ID number EPA–HQ–OPP–2008–0772, by one of the following methods:

- *Federal eRulemaking Portal*: *http://www.regulations.gov*. Follow the on-line instructions for submitting comments.
- *Mail*: Office of Pesticide Programs (OPP) Regulatory Public Docket (7502P), Environmental Protection Agency, 1200 Pennsylvania Ave., NW, Washington, DC 20460–0001.
- *Delivery*: OPP Regulatory Public Docket (7502P), Environmental Protection Agency, Rm. S–4400, One Potomac Yard (South Bldg.), 2777 S. Crystal Dr., Arlington, VA. Deliveries are only accepted during the Docket Facility's normal hours of operation (8:30 a.m. to 4 p.m., Monday through Friday, excluding legal holidays). Special arrangements should be made for deliveries of boxed information. The

Docket Facility telephone number is (703) 305–5805.

II. Petition for Tolerance

In the **Federal Register** of December 3, 2008 (73 FR 73640) (FRL–8390–4), EPA issued a notice pursuant to section 408(d)(3) of FFDCA, 21 U.S.C. 346a(d)(3), announcing the filing of pesticide petitions (PP 8F7414, 8F7415) by Bayer CropScience, 2 T.W. Alexander Drive, Research Triangle Park, NC 27709. The petitions requested that 40 CFR 180.472 be amended by establishing tolerances for combined residues of the insecticide imidacloprid, 1-[(6-chloro-3-pyridinyl)methyl]-*N*-nitro-2-imidazolidinimine, in or on vegetable, bulb, group 3 at 2.5 parts per million (ppm) (PP 8F7414) and cereal, grains, group 15 at 0.05 ppm (PP 8F7415). That notice referenced a summary of the petitions prepared by Bayer CropScience, the registrant, which is available to the public in the docket, *http://www.regulations.gov*. There were no comments received in response to the notice of filing.

Based upon review of the data supporting the petition, EPA has determined that the available toxicology, occupational/residential, and residue chemistry databases support the establishment of permanent tolerances of imidacloprid in or on onion, green, subgroup 3-07B at 2.5 ppm, onion, dry bulb, subgroup 3-07A at 0.15 ppm and grain, cereal, except rice, group 15 at 0.05 ppm. The reasons for these changes are explained in Unit IV.D.

III. Aggregate Risk Assessment and Determination of Safety

Section 408(b)(2)(A)(i) of FFDCA allows EPA to establish a tolerance (the legal limit for a pesticide chemical residue in or on a food) only if EPA determines that the tolerance is "safe." Section 408(b)(2)(A)(ii) of FFDCA defines "safe" to mean that "there is a reasonable certainty that no harm will result from aggregate exposure to the pesticide chemical residue, including all anticipated dietary exposures and all other exposures for which there is reliable information." This includes exposure through drinking water and in residential settings, but does not include occupational exposure. Section 408(b)(2)(C) of FFDCA requires EPA to give special consideration to exposure of infants and children to the pesticide chemical residue in establishing a tolerance and to "ensure that there is a reasonable certainty that no harm will result to infants and children from aggregate exposure to the pesticide chemical residue. . . ."

Consistent with section 408(b)(2)(D) of FFDCA, and the factors specified in section 408(b)(2)(D) of FFDCA, EPA has reviewed the available scientific data and other relevant information in support of this action. EPA has sufficient data to assess the hazards of and to make a determination on aggregate exposure for the petitioned-for tolerances for combined residues of imidacloprid in or on onion, green, subgroup 3-07B at 2.5 ppm, onion, dry bulb, subgroup 3-07A at 0.15 ppm and grain, cereal, except rice, group 15 at 0.05 ppm. EPA's assessment of exposures and risks associated with establishing tolerances follows.

A. Toxicological Profile

EPA has evaluated the available toxicity data and considered its validity, completeness, and reliability as well as the relationship of the results of the studies to human risk. EPA has also considered available information concerning the variability of the sensitivities of major identifiable subgroups of consumers, including infants and children. Specific information on the studies received and the nature of the adverse effects caused by imidacloprid as well as the no-observed-adverse-effect-level (NOAEL) and the lowest-observed-adverse-effect-level (LOAEL) from the toxicity studies can be found at *http://www.regulations.gov* in document "Imidacloprid: Human-Health Risk Assessment," pages 43 - 46 in docket ID number EPA–HQ–OPP–2008–0772.

Imidacloprid has low acute toxicity via the dermal and inhalation routes and moderate acute toxicity via the oral route. It is not an eye or dermal irritant and is not a dermal sensitizer. The nervous system is the primary target organ of imidacloprid. Nervous system effects evidenced as changes in clinical signs and functional observation battery (FOB) assessments were seen in rat acute and subchronic neurotoxicity studies. Also, in the rat developmental neurotoxicity study, a decrease in the caudate/putamen width was noted in female pups. Retinal atrophy was seen in high-dose females in the rat combined chronic toxicity/carcinogenicity study. No nervous system effects were noted in the mouse carcinogenicity or the reproduction and developmental studies or in the rabbit dermal or rat inhalation studies. The dog was less sensitive than rodents to the effects of imidacloprid. The rabbit appeared to be very sensitive as there was increased mortality in the oral developmental study at the highest dose tested. Increased incidence of mineralized particles in the thyroid colloid was noted in the rat combined chronic toxicity/carcinogenicity study. Body weight decrements were noted in the rat and/or mouse chronic and carcinogenicity studies, the rat subchronic neurotoxicity study, and the developmental, developmental neurotoxicity and reproduction studies. No effects were observed in the rabbit dermal or rat inhalation studies. There was no evidence of carcinogenic potential in either the rat chronic toxicity/carcinogenicity or mouse carcinogenicity studies, and there is no concern for mutagenicity. There was no evidence of increased qualitative or quantitative susceptibility of rats or rabbits to *in utero* exposure to imidacloprid and no evidence of qualitative or quantitative increased susceptibility of rat offspring in the reproduction study. There was evidence of an increased qualitative susceptibility in the rat developmental neurotoxicity study. At the highest dose tested, maternal effects consisted largely of slight decreases in food consumption and body-weight gain during early lactation, while pup effects included decreased body weight, decreased motor activity, and decreased caudate/putamen width in females.

B. Toxicological Endpoints

For hazards that have a threshold below which there is no appreciable risk, a toxicological point of departure (POD) is identified as the basis for derivation of reference values for risk assessment. The POD may be defined as the highest dose at which no adverse effects are observed (the NOAEL) in the toxicology study identified as appropriate for use in risk assessment. However, if a NOAEL cannot be determined, the lowest dose at which adverse effects of concern are identified (the LOAEL) or a Benchmark Dose (BMD) approach is sometimes used for risk assessment. Uncertainty/safety factors (UFs) are used in conjunction with the POD to take into account uncertainties inherent in the extrapolation from laboratory animal data to humans and in the variations in sensitivity among members of the human population as well as other unknowns. Safety is assessed for acute and chronic dietary risks by comparing aggregate food and water exposure to the pesticide to the acute population adjusted dose (aPAD) and chronic population adjusted dose (cPAD). The aPAD and cPAD are calculated by dividing the POD by all applicable UFs. Aggregate short-, intermediate-, and chronic-term risks are evaluated by comparing food, water, and residential exposure to the POD to ensure that the

margin of exposure (MOE) called for by the product of all applicable UFs is not exceeded. This latter value is referred to as the Level of Concern (LOC).

For non-threshold risks, the Agency assumes that any amount of exposure will lead to some degree of risk. Thus, the Agency estimates risk in terms of the probability of an occurrence of the adverse effect greater than that expected in a lifetime. For more information on the general principles EPA uses in risk characterization and a complete description of the risk assessment process, see *http://www.epa.gov/pesticides/factsheets/riskassess.htm*.

A summary of the toxicological endpoints for imidacloprid used for human risk assessment can be found at *http://www.regulations.gov* in document "Imidacloprid: Human-Health Risk Assessment," pages 16 - 17 in docket ID number EPA–HQ–OPP–2008–0772.

C. Exposure Assessment

1. *Dietary exposure from food and feed uses*. In evaluating dietary exposure to imidacloprid, EPA considered exposure under the petitioned-for tolerances as well as all existing imidacloprid tolerances in (40 CFR 180.472). EPA assessed dietary exposures from imidacloprid in food as follows:

i. *Acute exposure*. Quantitative acute dietary exposure and risk assessments are performed for a food-use pesticide, if a toxicological study has indicated the possibility of an effect of concern occurring as a result of a 1–day or single exposure.

In estimating acute dietary exposure, EPA used food consumption information from the United States Department of Agriculture (USDA) 1994–1996 and 1998 Nationwide Continuing Surveys of Food Intake by Individuals (CSFII). As to residue levels in food, EPA conducted an unrefined, acute dietary exposure assessment using tolerance-level residues and assuming 100% crop treated (CT) for all registered and proposed commodities for the general U.S. population and various population subgroups.

ii. *Chronic exposure*. In conducting the chronic dietary exposure assessment EPA used the food consumption data from the USDA 1994–1996 and 1998 CSFII. As to residue levels in food, EPA conducted a partially refined, chronic dietary exposure assessment using tolerance-level residues for all registered and proposed commodities and percent crop treated (PCT) for some registered commodities.

iii. *Cancer*. A cancer exposure assessment was not performed because imidacloprid is not carcinogenic. On November 11, 1993, the Agency classified imidacloprid as a Group E chemical, "Evidence of non-carcinogenicity for humans," by all routes of exposure based upon lack of evidence of carcinogenicity in rats and mice.

iv. *Percent crop treated (PCT) information*. Section 408(b)(2)(F) of FFDCA states that the Agency may use data on the actual percent of food treated for assessing chronic dietary risk only if:

- Condition a: The data used are reliable and provide a valid basis to show what percentage of the food derived from such crop is likely to contain the pesticide residue.
- Condition b: The exposure estimate does not underestimate exposure for any significant subpopulation group.
- Condition c: Data are available on pesticide use and food consumption in a particular area, the exposure estimate does not understate exposure for the population in such area.

In addition, the Agency must provide for periodic evaluation of any estimates used. To provide for the periodic evaluation of the estimate of PCT as required by FFDCA section 408(b)(2)(F), EPA may require registrants to submit data on PCT.

The Agency used PCT information as follows:

Commodity	Average percent Crop Treated Data
Almonds	<1
Apples	25
Artichokes	5
Avocados	<1
Blueberries	10
Broccoli	50
Cabbage	20
Cantaloupe	40
Cauliflower	50
Celery	10
Cherries	10
Cotton	10
Cucumbers	5
Eggplant	35
Field corn	<2.5
Filberts (hazelnuts)	<1
Grapefruit	10
Grapes	30
Honeydew	30
Lemons	5
Lettuce	65
Oranges	10
Peaches	5
Pears	5
Pecans	10
Peppers	30
Potatoes	35
Prunes	<1
Pumpkin	10
Soybeans	<1
Spinach	20
Squash	10
Strawberries	10
Sugar beets	<1
Sweet corn	<1
Tangerines	5
Tobacco	20
Tomatoes	15
Walnuts	<1
Watermelon	15

In most cases, EPA uses available data from the United States Department of Agriculture/National Agricultural Statistics Service (USDA/NASS), proprietary market surveys, and the National Pesticide Use Database for the chemical/crop combination for the most recent 6 years. EPA uses an average PCT for chronic dietary risk analysis. The average PCT figure for each existing use is derived by combining available public and private market survey data for that use, averaging across all observations, and rounding to the nearest 5%, except for those situations in which the average PCT is less than one. In those cases, 1% is used as the average PCT and 2.5% is used as the maximum PCT. EPA uses a maximum PCT for acute dietary risk analysis. The maximum PCT figure is the highest observed maximum value reported within the recent 6 years of available public and private market survey data for the existing use and rounded up to the nearest multiple of 5%.

The Agency believes that the three conditions discussed in Unit III.C.1.iv. have been met. With respect to Condition a, PCT estimates are derived from Federal and private market survey data, which are reliable and have a valid basis. The Agency is reasonably certain that the percentage of the food treated is not likely to be an underestimation. As to Conditions b and c, regional consumption information and consumption information for significant subpopulations is taken into account through EPA's computer-based model for evaluating the exposure of significant subpopulations including several regional groups. Use of this consumption information in EPA's risk assessment process ensures that EPA's exposure estimate does not understate exposure for any significant subpopulation group and allows the Agency to be reasonably certain that no regional population is exposed to residue levels higher than those estimated by the Agency. Other than the data available through national food consumption surveys, EPA does not have available reliable information on the regional consumption of food to which imidacloprid may be applied in a particular area.

2. *Dietary exposure from drinking water*. The Agency used screening level water exposure models in the dietary exposure analysis and risk assessment for imidacloprid in drinking water. These simulation models take into account data on the physical, chemical, and fate/transport characteristics of imidacloprid. Further information regarding EPA drinking water models used in pesticide exposure assessment can be found at *http://www.epa.gov/oppefed1/models/water/index.htm*.

Based on the First Index Reservoir Screening Tool (FIRST) and Screening Concentration in Ground Water (SCI-GROW) models, the estimated drinking water concentrations (EDWCs) of imidacloprid for acute exposures are estimated to be 36.0 parts per billion (ppb) for surface water and 2.09 ppb for ground water.

Modeled estimates of drinking water concentrations were directly entered into the dietary exposure model. For acute dietary risk assessment, the water concentration value of 36.0 ppb was used to assess the contribution to drinking water. For chronic dietary risk assessment, the water concentration of value 17.2 ppb was used to assess the contribution to drinking water.

3. *From non-dietary exposure*. The term "residential exposure" is used in this document to refer to non-occupational, non-dietary exposure (e.g., for lawn and garden pest control, indoor pest control, termiticides, and flea and tick control on pets).

Imidacloprid is currently registered for the following uses that could result in residential exposures: Indoor and outdoor ornamental plantings, ornamental lawns and turf, pre- and post-construction termiticide applications, spot-on treatments for dogs and cats, and crack and crevice treatments. Additionally, it is registered for use on mattresses for bed bug control. EPA assessed residential exposure using the assumption that residential pesticide handlers (i.e., persons who might mix, load and, or apply a pesticide material) could be exposed to several formulations that contain imidacloprid. The Agency also assessed post-application exposure for adults and children contacting surfaces, foliage, or pets that were treated with imidacloprid. Residential exposures are expected to be short-term (i.e., 1 to 30 days) or intermediate-term (1 to 6 months) based upon the pest spectra, sites of application, methods of application, formulations and the retreatment intervals. Since the indoor crack and crevice and mattress scenarios resulted in the highest potential exposures, these assessments are protective of all residential exposures from imidacloprid.

4. *Cumulative effects from substances with a common mechanism of toxicity*. Section 408(b)(2)(D)(v) of FFDCA requires that, when considering whether to establish, modify, or revoke a tolerance, the Agency consider "available information" concerning the cumulative effects of a particular pesticide's residues and "other substances that have a common mechanism of toxicity."

EPA has not found imidacloprid to share a common mechanism of toxicity with any other substances, and imidacloprid does not appear to produce a toxic metabolite produced by other substances. For the purposes of this tolerance action, therefore, EPA has assumed that imidacloprid does not have a common mechanism of toxicity with other substances. For information regarding EPA's efforts to determine which chemicals have a common mechanism of toxicity and to evaluate the cumulative effects of such chemicals, see EPA's website at *http://www.epa.gov/pesticides/cumulative*.

D. Safety Factor for Infants and Children

1. *In general*. Section 408(b)(2)(C) of FFDCA provides that EPA shall apply an additional tenfold (10X) margin of safety for infants and children in the case of threshold effects to account for prenatal and postnatal toxicity and the completeness of the database on toxicity and exposure unless EPA determines based on reliable data that a different margin of safety will be safe for infants and children. This additional margin of safety is commonly referred to as the FQPA SF. In applying this provision, EPA either retains the default value of 10X, or uses a different additional safety factor when reliable data available to EPA support the choice of a different factor.

2. *Prenatal and postnatal sensitivity*. There was no quantitative or qualitative evidence of increased susceptibility of rat and rabbit fetuses to *in utero* exposure in developmental studies. There was no quantitative or qualitative evidence of increased susceptibility of rat offspring in the multi-generation reproduction study. There was evidence of increased qualitative susceptibility in the rat developmental neurotoxicity study; however, the concern is low for the following reasons:

i. The effects in pups are well-characterized with a clear NOAEL;

ii. The pup effects occur in the presence of maternal toxicity with the same NOAEL for effects in both pups and dams; and

iii. The doses and endpoints selected for regulatory purposes are protective of the pup effects noted at higher doses in the developmental neurotoxicity study. Therefore, there are no residual uncertainties for prenatal/postnatal toxicity in this study.

3. *Conclusion*. EPA has determined that reliable data show the safety of infants and children would be adequately protected if the FQPA SF were reduced to 1X for all exposure scenarios, except acute dietary (all populations). That decision is based on the following findings:

i. The toxicological database for imidacloprid is complete, with the exception of an immunotoxicity study.

ii. The toxicology database for imidacloprid does not show any evidence of treatment-related effects on the immune system. The overall weight of evidence suggests that this chemical does not directly target the immune system. An immunotoxicity study is required as a part of new data requirements in 40 CFR part 158 for conventional pesticide registration; however, the Agency does not believe that conducting a functional immunotoxicity study will result in a lower POD than that currently used for overall risk assessment. Therefore, a database uncertainty factor (UF_{DB}) is not needed to account for lack of this study.

iii. There is no evidence that imidacloprid results in increased susceptibility *in utero* to rats or rabbits in the prenatal developmental studies or in offspring in the 2–generation reproduction study.

iv. A developmental neurotoxicity study was performed with imidacloprid and well-defined NOAELs were achieved in the study.

v. There was evidence of increased qualitative susceptibility in the rat developmental neurotoxicity study; however, the concern is low for reasons stated above.

vi. There are no residual uncertainties for prenatal/postnatal toxicity.

vii. The acute dietary food exposure assessment utilizes existing and proposed tolerance-level residues and 100% CT information for all commodities. By using these screening-level assessments, actual exposures/risks will not be underestimated.

viii. The chronic food exposure assessment utilizes and proposed tolerance-level residues and %CT data for several existing uses. For all proposed uses, 100% CT is assumed. The chronic assessment is somewhat refined and based on reliable data and will not underestimate exposure/risk.

ix. The dietary drinking water assessment utilizes water concentration

values generated by model and associated modeling parameters which are designed to provide conservative, health-protective, high-end estimatesof water concentrations which will not likely be exceeded.

x. The residential handler assessment is based upon the residential standard operating procedures (SOPs) in conjunction with chemical-specific study data in some cases and Pesticide Handler Exposure Database (PHED) unit exposures in other cases. The majority of the residential post-application assessment is based upon chemical-specific Turf Transfer Residue (TTR) data or other chemical-specific post-application exposure study data. The chemical-specific study data as well as the surrogate study data used are reliable and also are not expected to underestimate risk to adults as well as to children. In a few cases where chemical-specific data were not available, the SOPs were used alone. The residential SOPs are based upon reasonable "worst-case" assumptions and are not expected to underestimate risk. These assessments of exposure are not likely to underestimate the resulting estimates of risk from exposure to imidacloprid.

A 3X FQPA SF was retained in the form of a UFL (uncertainty factor due to extrapolation from a LOAEL in the absence of a NOAEL) for the acute dietary (all populations) exposure scenario only, since a NOAEL was not observed in the relevant study for that exposure scenario (acute neurotoxicity study in rats). A 3X uncertainty factor was judged to be adequate (as opposed to a 10X) for the following reasons:

1. The LOAEL (42 mg/kg) is comparable to the LOAELs seen in adults in the developmental rat study (30 mg/kg/day) and the 2–generation reproduction study [47/52 milligrams/kilograms/day (mg/kg/day) (male/female)] and in the offspring in the DNT study (55 mg/kg/day);

2. The extrapolated NOAEL of 14 mg/kg (42/3 = 14) is comparable to the NOAEL of 20 mg/kg/day established in the offspring in the DNT; and,

3. The neurotoxic effects in this study showed a good dose response which resulted in minimal effects on motor activity and locomotor activity at the LOAEL.

E. Aggregate Risks and Determination of Safety

EPA determines whether acute and chronic pesticide exposures are safe by comparing aggregate exposure estimates to the aPAD and cPAD. The aPAD and cPAD represent the highest safe exposures, taking into account all appropriate SFs. EPA calculates the aPAD and cPAD by dividing the POD by all applicable UFs. For linear cancer risks, EPA calculates the probability of additional cancer cases given the estimated aggregate exposure. Short-, intermediate-, and chronic-term risks are evaluated by comparing the estimated aggregate food, water, and residential exposure to the POD to ensure that the MOE called for by the product of all applicable UFs is not exceeded.

1. *Acute risk*. An acute aggregate risk assessment takes into account exposure estimates from acute dietary consumption of food and drinking water. No adverse effect resulting from a single-oral exposure was identified and no acute dietary endpoint was selected. Therefore, imidacloprid is not expected to pose an acute risk. Using the exposure assumptions discussed in this unit for acute exposure, the acute dietary exposure from food and water to imidacloprid will occupy 70% of the aPAD for (children 1 to 2 years old) the population group receiving the greatest exposure.

2. *Chronic risk*. Using the exposure assumptions described in this unit for chronic exposure, EPA has concluded that chronic exposure to imidacloprid from food and water will utilize 32% of the cPAD for (children 1 to 2 years old) the population group receiving the greatest exposure. Based on the explanation in Unit III.C.3., regarding residential use patterns, chronic residential exposure to residues of imidacloprid is not expected.

3. *Short-term risk*. Short-term aggregate exposure takes into account short-term residential exposure plus chronic exposure to food and water (considered to be a background exposure level).

Imidacloprid is currently registered for crack and crevice uses and bed bug uses that could result in short-term residential exposure and the Agency has determined that it is appropriate to aggregate chronic exposure through food and water with short-term residential exposures to imidacloprid. Using the exposure assumptions described in Unit III.C.3. for short-term exposures, EPA has concluded the combined short-term food, water, and residential exposures aggregated result in aggregate MOEs of 430 for adults and 170 for children. Toddlers' residential short-term aggregate exposure includes dermal and inhalation exposure from the crack and crevice uses, dermal exposure from the bed-bug uses, and incidental oral exposure from hand-to-mouth contact with treated surfaces. Adult short-term aggregate exposure includes dermal and inhalation exposure from indoor crack and crevice uses, and dermal exposure from the bed-bug uses. These exposures were higher than those calculated for all other residential uses of imidacloprid. Therefore, the crack and crevice and bed bug treatment exposure estimates were aggregated with the chronic dietary to provide a worst-case estimate of short-term aggregate risk for the U.S. population and children 1 to 2 years old. The combined short-term residential MOEs for these scenarios were 580 for adults and 240 for children.

4. *Intermediate-term risk*. Intermediate-term aggregate exposure takes into account intermediate-term residential exposure plus chronic exposure to food and water (considered to be a background exposure level).

Imidacloprid is currently registered for crack and crevice uses and bed bug uses that could result in intermediate-term residential exposure and the Agency has determined that it is appropriate to aggregate chronic exposure through food and water with intermediate-term residential exposures to imidacloprid.

Using the exposure assumptions described in Unit III.C.3. for short-term exposures, EPA has concluded the combined short-term food, water, and residential exposures aggregated result in aggregate MOEs of 400 for adults and 150 for children. Toddlers' residential intermediate-term aggregate exposure includes dermal and inhalation exposure from the crack and crevice uses, dermal exposure from the bed-bug uses, and incidental oral exposure from hand-to-mouth contact with treated surfaces. Adult intermediate-term aggregate exposure includes dermal and inhalation exposure from indoor crack and crevice uses, and dermal exposure from the bed-bug uses. These exposures were higher than those calculated for all other residential uses of imidacloprid. Therefore, the crack and crevice and bed bug treatment exposure estimates were aggregated with the chronic dietary exposure to provide a worst-case estimate of intermediate-term aggregate risk for the U.S. population and children 1 to 2 years old. The combined intermediate-term residential MOEs for these scenarios were 540 for adults and 260 for children.

5. *Aggregate cancer risk for U.S. population*. Based on the lack of evidence of carcinogenicity in mice and rats at doses that were judged to be adequate to assess the carcinogenic potential, imidacloprid was classified as "not likely to be carcinogenic to humans," and is not expected to pose a cancer risk to humans. Therefore, a

quantitative cancer risk assessment is not needed.

6. *Determination of safety*. Based on these risk assessments, EPA concludes that there is a reasonable certainty that no harm will result to the general population, or to infants and children from aggregate exposure to imidacloprid residues.

IV. Other Considerations

A. Analytical Enforcement Methodology

Adequate enforcement methodologies, Bayer Gas Chromatography/Mass Spectrometry (GC/MS) Method 00200 and Bayer GC/MS Method 00191, is available to enforce the tolerance expression. The methods may be requested from: Chief, Analytical Chemistry Branch, Environmental Science Center, 701 Mapes Rd., Ft. Meade, MD 20755–5350; telephone number: (410) 305–2905; e-mail address: *residuemethods@epa.gov*.

B. International Residue Limits

There are no established Mexican maximum residue limits (MRLs) for the proposed new uses. There are established Codex MRLs for the sum of imidacloprid and its metabolites containing the 6-chloropyridinyl moiety expressed as imidacloprid, in or on cereal grain at 0.05 ppm, leeks at 0.05 ppm, and bulb onions at 0.1 ppm. There are also established Canadian MRLs for 1-[(6-chloro-3-pyridinyl)methyl]-*N*-nitro-1H-imidazol-2-amine, including metabolites containing the 6-chloropicolyl moiety in or on sweet corn at 0.05 ppm and field corn at 0.05 ppm. With the exception of onions, there is no harmonization issue for these petitions. The Codex MRLs for leeks (0.05 ppm) and bulb onions (0.1 ppm) can not be harmonized as the U.S. use pattern necessitates higher tolerances (0.15 ppm for onion, dry bulb, subgroup 3-07A; and 2.5 ppm for onion, green, subgroup 3-07B).

C. Response to Comments

There were no comments submitted in response to the Notice of Filing published in the **Federal Register** on December 3, 2008.

D. Revisions to Petitioned-For Tolerances

Due to residues on dry bulb onions and green onions varying by greater than 5X, the establishment of a crop group tolerance for crop group 3 was not appropriate. The Agency determined that the available toxicology, occupational/residential, and residue chemistry databases support the establishment of permanent tolerances of imidacloprid in or on onion, green, subgroup 3-07B at 2.5 ppm and onion, dry bulb, subgroup 3-07A at 0.15 ppm.

No new field trial data were submitted in support of the proposed tolerance for cereal grains, however there are existing tolerances of combined residues of imidacloprid in or on barley, grain; corn, field, grain; corn, pop, grain; corn, sweet, kernel plus cob with husks removed; millet, pearl, grain; millet, proso, grain; oats, grain, grain; rye, grain; sorghum, grain; and wheat, grain at 0.05 ppm. There are no existing field trial data on rice, another member of the cereal grains crop group. In the absence of rice data, the available toxicology, occupational/residential, and residue chemistry databases support the establishment of permanent tolerances of imidacloprid in or on grain, cereal, except rice, group 15 at 0.05 ppm. In connection with the imidacloprid petition for cereal grain group tolerance, EPA has reviewed the available cereal grain data on forage, fodder, and straw of cereal grains. Individual imidacloprid tolerances now exist for many forage, fodder, and straw cereal grain commodities. EPA has determined that sufficient data are available to establish the following group tolerances associated with the cereal grain group tolerance: Grain, cereal, forage, fodder and straw, group 16, forage at 7.0 ppm; grain, cereal, forage, fodder and straw, group 16, hay at 6.0 ppm; grain, cereal, forage, fodder and straw, group 16, stover at 0.3 ppm and grain, cereal, forage, fodder and straw, group 16, straw at 3.0 ppm. The Crop Group 16 tolerances are being limited like the Crop Group 15 tolerance to exclude rice.

The following established tolerances are being deleted because they are superseded by inclusion in groups 15 and 16: Barley, grain at 0.05 ppm; barley, hay at 0.5 ppm; barley, straw at 0.5 ppm; corn, field, forage at 0.10 ppm; corn, field, grain at 0.05 ppm; corn, field, stover at 0.20 ppm; corn, pop, grain at 0.05 ppm; corn, pop, stover at 0.20 ppm; corn, sweet, forage at 0.10 ppm; corn, sweet, kernel plus cob with husks removed at 0.05 ppm; corn, sweet, stover at 0.20 ppm; millet, pearl, forage at 2.0 ppm; millet, pearl, grain at 0.05 ppm; millet, pearl, hay at 6.0 ppm; millet, pearl, straw at 3,0 ppm; millet, proso, forage at 2.0 ppm; millet, proso, grain at 0.05 ppm; millet, proso, hay at 6.0 ppm; millet, proso, straw at 3.0 ppm; oat, forage at 2.0 ppm; oat, grain at 0.05 ppm; oat, hay at 6.0 ppm; oat, straw at 3.0 ppm; rye, forage at 2.0 ppm; rye, grain at 0.05 ppm; rye, hay at 6.0 ppm; rye, straw at 3.0 ppm; sorghum, forage at 0.10 ppm; sorghum, grain, grain at 0.05 ppm; sorghum, grain, stover at 0.10 ppm; wheat, forage at 7.0 ppm; wheat, grain at 0.05 ppm; wheat, hay at 0.5 ppm and wheat, straw at 0.5 ppm.

Additionally, the following tolerances from indirect or inadvertent residues are also being deleted: Corn, sweet, kernel plus cob with husks removed at 0.05 ppm; grain, cereal, forage, fodder and straw, group 16, forage at 2.0 ppm; grain, cereal, forage, fodder and straw, group 16, hay at 6.0 ppm; grain, cereal, forage, fodder and straw, group 16, stover at 0.3 ppm; grain, cereal, forage, fodder and straw, group 16, straw at 3.0 ppm and grain, cereal, group 15 at 0.05 ppm. The following tolerance from indirect or inadvertent residues is being added: Rice, grain at 0.05 ppm.

V. Conclusion

Therefore, tolerances are established for combined residues of imidacloprid, 1-[(6-chloro-3-pyridinyl)methyl]-*N*-nitro-2-imidazolidinimine, in or on onion, dry bulb, subgroup 3-07A at 0.15 ppm; onion, green, subgroup 3-07B at 2.5 ppm; grain, cereal, except rice, group 15 at 0.05 ppm; grain, cereal, forage, fodder and straw, except rice, group 16, forage at 7.0 ppm; grain, cereal, forage, fodder and straw, except rice, group 16, hay at 6.0 ppm; grain, cereal, forage, fodder and straw, except rice, group 16, stover at 0.3 ppm and grain, cereal, forage, fodder and straw, except rice, group 16, straw at 3.0 ppm.

VI. Statutory and Executive Order Reviews

This final rule establishes tolerances under section 408(d) of FFDCA in response to a petition submitted to the Agency. The Office of Management and Budget (OMB) has exempted these types of actions from review under Executive Order 12866, entitled *Regulatory Planning and Review* (58 FR 51735, October 4, 1993). Because this final rule has been exempted from review under Executive Order 12866, this final rule is not subject to Executive Order 13211, entitled *Actions Concerning Regulations That Significantly Affect Energy Supply, Distribution, or Use* (66 FR 28355, May 22, 2001) or Executive Order 13045, entitled *Protection of Children from Environmental Health Risks and Safety Risks* (62 FR 19885, April 23, 1997). This final rule does not contain any information collections subject to OMB approval under the Paperwork Reduction Act (PRA), 44 U.S.C. 3501 *et seq.*, nor does it require any special considerations under Executive Order 12898, entitled *Federal Actions to Address Environmental Justice in Minority Populations and Low-Income Populations* (59 FR 7629, February 16, 1994).

Since tolerances and exemptions that are established on the basis of a petition under section 408(d) of FFDCA, such as the tolerances in this final rule, do not require the issuance of a proposed rule, the requirements of the Regulatory Flexibility Act (RFA) (5 U.S.C. 601 *et seq.*) do not apply.

This final rule directly regulates growers, food processors, food handlers, and food retailers, not States or tribes, nor does this action alter the relationships or distribution of power and responsibilities established by Congress in the preemption provisions of section 408(n)(4) of FFDCA. As such, the Agency has determined that this action will not have a substantial direct effect on States or tribal governments, on the relationship between the national government and the States or tribal governments, or on the distribution of power and responsibilities among the various levels of government or between the Federal Government and Indian tribes. Thus, the Agency has determined that Executive Order 13132, entitled *Federalism* (64 FR 43255, August 10, 1999) and Executive Order 13175, entitled *Consultation and Coordination with Indian Tribal Governments* (65 FR 67249, November 9, 2000) do not apply to this final rule. In addition, this final rule does not impose any enforceable duty or contain any unfunded mandate as described under Title II of the Unfunded Mandates Reform Act of 1995 (UMRA) (Public Law 104–4).

This action does not involve any technical standards that would require Agency consideration of voluntary consensus standards pursuant to section 12(d) of the National Technology Transfer and Advancement Act of 1995 (NTTAA), Public Law 104–113, section 12(d) (15 U.S.C. 272 note).

VII. Congressional Review Act

The Congressional Review Act, 5 U.S.C. 801 *et seq.*, generally provides that before a rule may take effect, the agency promulgating the rule must submit a rule report to each House of the Congress and to the Comptroller General of the United States. EPA will submit a report containing this rule and other required information to the U.S. Senate, the U.S. House of Representatives, and the Comptroller General of the United States prior to publication of this final rule in the **Federal Register**. This final rule is not a "major rule" as defined by 5 U.S.C. 804(2).

List of Subjects in 40 CFR Part 180

Environmental protection, Administrative practice and procedure, Agricultural commodities, Pesticides and pests, Reporting and recordkeeping requirements.

Dated: April 15, 2010.

G. Jeffrey Herndon,

Acting Director, Registration Division, Office of Pesticide Programs.

■ Therefore, 40 CFR chapter I is amended as follows:

PART 180—[AMENDED]

■ 1. The authority citation for part 180 continues to read as follows:

Authority: 21 U.S.C. 321(q), 346a and 371.

■ 2. Section 180.472 is revised to read as follows:

§ 180.472 Imidacloprid; tolerances for residues.

(a) *General.* Tolerances are established for residues of the insecticide imidacloprid, including its metabolites and degradates, in or on the commodities in the table below. Compliance with the tolerance levels specified below is to be determined by measuring only the sum of imidacloprid (1-[6-chloro-3-pyridinyl) methyl]-*N*-nitro-2-imidazolidinimine) and its metabolites containing the 6-chloropyridinyl moiety, calculated as the stoichiometric equivalent of imidacloprid, in or on the following commodities:

Commodity	Parts per million
Acerola	1.0
Almond, hulls	4.0
Apple	0.5
Apple, wet pomace	3.0
Artichoke, globe	2.5
Aspirated grain fractions	240
Atemoya	0.30
Avocado	1.0
Banana	0.50
Beet, sugar, molasses	0.30
Beet, sugar, roots	0.05
Beet, sugar, tops	0.50
Biriba	0.30
Blueberry	3.5
Borage, seed	0.05
Caneberry, subgroup 13-A	2.5
Canistel	1.0
Canola, seed	0.05
Cattle, fat	0.30
Cattle, meat	0.30
Cattle, meat byproducts	0.30
Cherimoya	0.30
Citrus, dried pulp	5.0
Coffee, bean, green	0.80
Cotton, gin byproducts	4.0
Cotton, meal	8.0
Cotton, undelinted seed	6.0
Crambe, seed	0.05
Cranberry	0.05
Currant	3.5
Custard apple	0.30
Egg	0.02
Elderberry	3.5
Feijoa	1.0
Flax, seed	0.05
Fruit, citrus, group 10	0.70
Fruit, pome, group 11	0.6
Fruit, stone, group 12	3.0
Goat, fat	0.30
Goat, meat	0.30
Goat, meat byproducts	0.30
Gooseberry	3.5
Grain, cereal, forage, fodder and straw, group 16, forage, except rice	7.0
Grain, cereal, forage, fodder and straw, group 16, hay, except rice	6.0
Grain, cereal, forage, fodder and straw, group 16, stover, except rice	0.30
Grain, cereal, forage, fodder and straw, group 16, straw, except rice	3.0
Grain, cereal, group 15, except rice	0.05
Grape	1.0
Grape, juice	1.5
Grape, raisin	1.5
Guava	1.0
Herbs subgroup 19A, dried herbs	48
Herbs subgroup 19-A, fresh herbs	8.0
Hog, fat	0.30
Hog, meat	0.30
Hog, meat byproducts	0.30
Hop, dried cones	6.0
Horse, fat	0.30
Horse, meat	0.30
Horse, meat byproducts	0.30
Huckleberry	3.5
Ilama	0.30
Jaboticaba	1.0
Juneberry	3.5
Kava, leaves	4.0
Kava, roots	0.40
Leaf petioles subgroup 4B	6.0
Leafy greens subgroup 4A	3.5
Lettuce, head	3.5
Lettuce, leaf	3.5
Lingonberry	3.5
Longan	3.0
Lychee	3.0
Mango	1.0
Milk	0.10
Mustard, black, seed	0.05
Mustard, field, seed	0.05
Mustard, Indian, seed	0.05
Mustard, rapeseed, seed	0.05
Mustard, seed	0.05
Nut, tree, group 14	0.05
Okra	1.0
Onion, dry bulbs, subgroup 3-07A	0.15
Onion, green, subgroup 3-07B	2.5
Papaya	1.0
Passionfruit	1.0
Peanut	0.45
Peanut, hay	35

Commodity	Parts per million
Peanut, meal	0.75
Pecan	0.05
Persimmon	3.0
Pistachio	0.05
Pomegranate	0.90
Potato, chip	0.40
Potato, processed potato waste	0.90
Poultry, fat	0.05
Poultry, meat	0.05
Poultry, meat byproducts	0.05
Pulasan	3.0
Rambutan	3.0
Rapeseed, seed	0.05
Raspberry, wild	2.5
Safflower, seed	0.05
Salal	3.5
Sapodilla	1.0
Sapote, black	1.0
Sapote, mamey	1.0
Sheep, fat	0.30
Sheep, meat	0.30
Sheep, meat byproducts	0.30
Soursop	0.30
Soybean, forage	8.0
Soybean, hay	35
Soybean, meal	4.0
Soybean, seed	3.5
Spanish lime	3.0
Star apple	1.0
Starfruit	1.0
Strawberry	0.50
Sugar apple	0.30
Sunflower, seed	0.05
Tomato, paste	6.0
Tomato, puree	3.0
Vegetable, brassica leafy, group 5	3.5
Vegetable, cucurbit, group 9	0.5
Vegetable, fruiting, group 8	1.0
Vegetable, leaves of root and tuber, group 2	4.0
Vegetable, legume, group 6, except soybean	4.0
Vegetable, root and tuber, group 1, except sugar beet	0.40
Watercress	3.5
Watercress, upland	3.5
Wax jambu	1.0

(b) *Section 18 emergency exemptions.* [Reserved]

(c) *Tolerances with regional registrations.* [Reserved]

(d) *Indirect or inadvertent residues.* Tolerances are established for indirect or inadvertent residues of the insecticide imidacloprid, including its metabolites and degradates, in or on the commodities in the table below. Compliance with the tolerance levels specified below is to be determined by measuring only the sum of imidacloprid (1-[6-chloro-3-pyridinyl) methyl]-*N*-nitro-2-imidazolidinimine) and its metabolites containing the 6-chloropyridinyl moiety, calculated as the stoichiometric equivalent of imidacloprid, in or on the following commodities, when present therein as a result of the application of the pesticide to growing crops listed in this section and other non-food crops as follows:

Commodity	Parts per million
Rice, grain	0.05
Vegetable, foliage of legume, group 7	2.5
Vegetable, legume, group 6	0.3

[FR Doc. 2010–9761 Filed 4–27–10; 8:45 am]

BILLING CODE 6560–50–S

ENVIRONMENTAL PROTECTION AGENCY

40 CFR Part 180

[EPA–HQ–OPP–2008–0866; FRL–8801–6]

Cyromazine; Pesticide Tolerances

AGENCY: Environmental Protection Agency (EPA).

ACTION: Final rule.

SUMMARY: This regulation establishes tolerances for residues of cyromazine in or on succulent beans at 2.0 parts per million (ppm). Interregional Research Project Number 4 (IR-4) requested these tolerances under the Federal Food, Drug, and Cosmetic Act (FFDCA).

DATES: This regulation is effective April 28, 2010. Objections and requests for hearings must be received on or before June 28, 2010, and must be filed in accordance with the instructions provided in 40 CFR part 178 (see also Unit I.C. of the **SUPPLEMENTARY INFORMATION**).

ADDRESSES: EPA has established a docket for this action under docket identification (ID) number EPA–HQ–OPP–2008–0866. All documents in the docket are listed in the docket index available at *http://www.regulations.gov*. Although listed in the index, some information is not publicly available, e.g., Confidential Business Information (CBI) or other information whose disclosure is restricted by statute. Certain other material, such as copyrighted material, is not placed on the Internet and will be publicly available only in hard copy form. Publicly available docket materials are available in the electronic docket at *http://www.regulations.gov*, or, if only available in hard copy, at the OPP Regulatory Public Docket in Rm. S–4400, One Potomac Yard (South Bldg.), 2777 S. Crystal Dr., Arlington, VA. The Docket Facility is open from 8:30 a.m. to 4 p.m., Monday through Friday, excluding legal holidays. The Docket Facility telephone number is (703) 305–5805.

FOR FURTHER INFORMATION CONTACT: Barbara Madden, Registration Division, Office of Pesticide Programs, Environmental Protection Agency, 1200 Pennsylvania Ave., NW., Washington, DC 20460–0001; telephone number: (703) 305–6463; e-mail address: *madden.barbara@epa.gov*.

SUPPLEMENTARY INFORMATION:

I. General Information

A. Does this Action Apply to Me?

You may be potentially affected by this action if you are an agricultural producer, food manufacturer, or pesticide manufacturer. Potentially affected entities may include, but are not limited to those engaged in the following activities:

- Crop production (NAICS code 111).
- Animal production (NAICS code 112).
- Food manufacturing (NAICS code 311).
- Pesticide manufacturing (NAICS code 32532).

This listing is not intended to be exhaustive, but rather to provide a guide for readers regarding entities likely to be affected by this action. Other types of entities not listed in this unit could also be affected. The North American Industrial Classification System (NAICS) codes have been provided to assist you and others in determining whether this action might apply to certain entities. If you have any questions regarding the applicability of this action to a particular entity, consult the person listed under **FOR FURTHER INFORMATION CONTACT**.

B. How Can I Access Electronic Copies of this Document?

In addition to accessing electronically available documents at *http://www.regulations.gov*, you may access this **Federal Register** document electronically through the EPA Internet under the "**Federal Register**" listings at *http://www.epa.gov/fedrgstr*. You may also access a frequently updated electronic version of EPA's tolerance regulations at 40 CFR part 180 through the Government Printing Office's e-CFR cite at *http://www.gpoaccess.gov/ecfr*.

To access the OPPTS harmonized test guidelines referenced in this document electronically please go to *http://www.epa.gov/oppts* and select "Test Methods & Guidelines" on the left-side navigation menu.

C. Can I File an Objection or Hearing Request?

Under section 408(g) of FFDCA, 21 U.S.C. 346a, any person may file an objection to any aspect of this regulation and may also request a hearing on those objections. You must file your objection or request a hearing on this regulation in accordance with the instructions provided in 40 CFR part 178. To ensure proper receipt by EPA, you must identify docket ID number EPA–HQ–OPP–2009–0866 in the subject line on the first page of your submission. All requests must be in writing, and must be mailed or delivered to the Hearing Clerk as required by 40 CFR part 178 on or before June 28, 2010.

In addition to filing an objection or hearing request with the Hearing Clerk as described in 40 CFR part 178, please submit a copy of the filing that does not contain any CBI for inclusion in the public docket that is described in **ADDRESSES**. Information not marked confidential pursuant to 40 CFR part 2 may be disclosed publicly by EPA without prior notice. Submit this copy, identified by docket ID number EPA–HQ–OPP–2008–0866, by one of the following methods:

• *Federal eRulemaking Portal*: *http://www.regulations.gov*. Follow the on-line instructions for submitting comments.

• *Mail*: Office of Pesticide Programs (OPP) Regulatory Public Docket (7502P), Environmental Protection Agency, 1200 Pennsylvania Ave., NW., Washington, DC 20460–0001.

• *Delivery*: OPP Regulatory Public Docket (7502P), Environmental Protection Agency, Rm. S–4400, One Potomac Yard (South Bldg.), 2777 S. Crystal Dr., Arlington, VA. Deliveries are only accepted during the Docket Facility's normal hours of operation (8:30 a.m. to 4 p.m., Monday through Friday, excluding legal holidays). Special arrangements should be made for deliveries of boxed information. The Docket Facility telephone number is (703) 305–5805.

II. Petition for Tolerance

In the **Federal Register** of April 13, 2009 (74 FR 16866) (FRL–8396–6), EPA issued a notice pursuant to section 408(d)(3) of FFDCA, 21 U.S.C. 346a(d)(3), announcing the filing of a pesticide petition (PP 8E7470) by Interregional Research Project Number 4 (IR-4), 500 College Road East, Suite 201 W, Princeton, NJ 08540. The petition requested that 40 CFR 180.414 be amended by establishing tolerances for residues of the insecticide cyromazine, (*N*-cyclopropyl-1,3,5-triazine-2,4,6-triamine) in or on bean, succulent at 2.0 parts per million (ppm). That notice referenced a summary of the petition prepared by Syngenta, the registrant, on behalf of IR-4 which is available to the public in the docket, *http://www.regulations.gov*. There were no comments received in response to the notice of filing.

III. Aggregate Risk Assessment and Determination of Safety

Section 408(b)(2)(A)(i) of FFDCA allows EPA to establish a tolerance (the legal limit for a pesticide chemical residue in or on a food) only if EPA determines that the tolerance is "safe." Section 408(b)(2)(A)(ii) of FFDCA defines "safe" to mean that "there is a reasonable certainty that no harm will result from aggregate exposure to the pesticide chemical residue, including all anticipated dietary exposures and all other exposures for which there is reliable information." This includes exposure through drinking water and in residential settings, but does not include occupational exposure. Section 408(b)(2)(C) of FFDCA requires EPA to give special consideration to exposure of infants and children to the pesticide chemical residue in establishing a tolerance and to "ensure that there is a reasonable certainty that no harm will result to infants and children from aggregate exposure to the pesticide chemical residue...."

Consistent with section 408(b)(2)(D) of FFDCA, and the factors specified in section 408(b)(2)(D) of FFDCA, EPA has reviewed the available scientific data and other relevant information in support of this action. EPA has sufficient data to assess the hazards of and to make a determination on aggregate exposure for the petitioned-for tolerances for residues of cyromazine on bean, succulent at 2.0 ppm. EPA's assessment of exposures and risks associated with establishing tolerances follows.

A. Toxicological Profile

EPA has evaluated the available toxicity data and considered its validity, completeness, and reliability as well as the relationship of the results of the studies to human risk. EPA has also considered available information concerning the variability of the sensitivities of major identifiable subgroups of consumers, including infants and children. Cyromazine is not an eye irritant or a dermal sensitizer but is a mild skin irritant. The liver and bone marrow (hematological system) are the primary targets for oral toxicity for cyromazine based on a chronic dog study. Decrease in body weight and food consumption are also common effects of cyromazine as observed in chronic dog, rat, mouse, and rabbit studies. No dermal or systemic toxicity was seen at the highest dose tested in two 21–day dermal toxicity studies in rabbits. No neurotoxicity studies with cyromazine are available. However, the cyromazine chemical class (triazine) does not generally target the central or peripheral nervous system and available data show no evidence of neurotoxic potential for cyromazine. There is no evidence that cyromazine is teratogenic or that offspring are more susceptible than adults based on developmental toxicity studies in rats and rabbits. In the 2–generation reproduction study in rats no reproductive effects were observed. Cyromazine was shown not to be carcinogenic in mice or rats following long-term dietary administration and is classified as "not likely to be carcinogenic to humans." The available mutagenicity data suggest that cyromazine does not have genotoxic activity. Specific information on the studies received and the nature of the adverse effects caused by cyromazine as well as the no-observed-adverse-effect-level (NOAEL) and the lowest-observed-adverse-effect-level (LOAEL) from the toxicity studies can be found at *http://www.regulations.gov* in docket ID number EPA–HQ–OPP–2009–0866, pages 25–27 of the document titled "Cyromazine Human Health Risk Assessment for Proposed New Use of Cyromazine on Succulent Beans."

B. Toxicological Endpoints

For hazards that have a threshold below which there is no appreciable risk, a toxicological point of departure (POD) is identified as the basis for derivation of reference values for risk assessment. The POD may be defined as the highest dose at which no adverse effects are observed (the NOAEL) in the toxicology study identified as appropriate for use in risk assessment. However, if a NOAEL cannot be determined, the lowest dose at which adverse effects of concern are identified (the LOAEL) or a Benchmark Dose (BMD) approach is sometimes used for risk assessment. Uncertainty/safety factors (UFs) are used in conjunction with the POD to take into account uncertainties inherent in the extrapolation from laboratory animal data to humans and in the variations in sensitivity among members of the human population as well as other unknowns. Safety is assessed for acute and chronic dietary risks by comparing aggregate food and water exposure to the pesticide to the acute population adjusted dose (aPAD) and chronic population adjusted dose (cPAD). The

aPAD and cPAD are calculated by dividing the POD by all applicable UFs. Aggregate short-, intermediate-, and chronic-term risks are evaluated by comparing food, water, and residential exposure to the POD to ensure that the margin of exposure (MOE) called for by the product of all applicable UFs is not exceeded. This latter value is referred to as the Level of Concern (LOC).

For non-threshold risks, the Agency assumes that any amount of exposure will lead to some degree of risk. Thus, the Agency estimates risk in terms of the probability of an occurrence of the adverse effect greater than that expected in a lifetime. For more information on the general principles EPA uses in risk characterization and a complete description of the risk assessment process, see *http://www.epa.gov/pesticides/factsheets/riskassess.htm*.

A summary of the toxicological endpoints for cyromazine used for human risk assessment can be found at *http://www.regulations.gov* in docket ID number EPA–HQ–OPP–2009–0866, page 15 of the document titled "Cyromazine. Human Health Risk Assessment for Proposed New Use of Cyromazine on Succulent Beans."

C. Exposure Assessment

1. *Dietary exposure from food and feed uses*. In evaluating dietary exposure to cyromazine, EPA considered exposure under the petitioned-for tolerances as well as all existing cyromazine tolerances in 40 CFR 180.414. EPA assessed dietary exposures from cyromazine in food as follows:

i. *Acute exposure*. Quantitative acute dietary exposure and risk assessments are performed for a food-use pesticide, if a toxicological study has indicated the possibility of an effect of concern occurring as a result of a 1–day or single exposure.

No such effects were identified in the toxicological studies for cyromazine; therefore, a quantitative acute dietary exposure assessment is unnecessary.

ii. *Chronic exposure*. A chronic dietary risk assessments was conducted for cyromazine using the Dietary Exposure Evaluation Model (DEEM-FCID, Version 2.03), which uses food consumption data from the USDA's Continuing Surveys of Food Intakes by Individuals (CSFII) from 1994–1996 and 1998. As to residue levels in food, tolerance level residues and 100% crop treated assumptions were used. DEEM default and empirical processing factors were used to modify the tolerance values.

iii. *Cancer*. Based on the absence of evidence of carcinogenicity in two adequate rodent carcinogenicity studies, EPA has classified cyromazine as "not likely to be carcinogenic to humans." Therefore, a quantitative exposure assessment to evaluate cancer risk is unnecessary.

iv. *Anticipated residue and percent crop treated (PCT) information*. EPA did not use anticipated residue and/or PCT information in the dietary assessment for cyromazine. Tolerance level residues and/or 100% crop treated were assumed for all food commodities.

2. *Dietary exposure from drinking water*. The Agency used screening level water exposure models in the dietary exposure analysis and risk assessment for cyromazine in drinking water. These simulation models take into account data on the physical, chemical, and fate/transport characteristics of cyromazine. Further information regarding EPA drinking water models used in pesticide exposure assessment can be found at *http://www.epa.gov/oppefed1/models/water/index.htm*. Based on the First Index Reservoir Screening Tool (FIRST) and Screening Concentration in Ground Water (SCI-GROW) models, the estimated drinking water concentrations (EDWCs) of cyromazine for chronic exposures for non-cancer assessments are estimated to be 15.8 parts per billion (ppb) for surface water and 1.1 ppb for ground water. Modeled estimates of drinking water concentrations were directly entered into the dietary exposure model. For chronic dietary risk assessment, the water concentration of value 15.8 ppb was used to assess the contribution to drinking water.

3. *From non-dietary exposure*. The term "residential exposure" is used in this document to refer to non-occupational, non-dietary exposure (e.g., for lawn and garden pest control, indoor pest control, termiticides, and flea and tick control on pets). Cyromazine is not registered for any specific use patterns that would result in residential exposure.

4. *Cumulative effects from substances with a common mechanism of toxicity*. Section 408(b)(2)(D)(v) of FFDCA requires that, when considering whether to establish, modify, or revoke a tolerance, the Agency consider "available information" concerning the cumulative effects of a particular pesticide's residues and "other substances that have a common mechanism of toxicity."

Cyromazine contains a symmetrical triazine substructure like the herbicides simazine and atrazine, but atrazine and simazine are chlorotriazines, and the toxicity of these chemicals is associated with the presence of a chlorine substituent on the triazine ring. Cyromazine is not a chlorotriazine. The chlorotriazines have a much different toxicological profile than does cyromazine which does not have a chlorine substituent on the triazine ring. EPA has not found cyromazine to share a common mechanism of toxicity with any other substances, and cyromazine does not appear to produce a toxic metabolite produced by other substances. For the purposes of this tolerance action, therefore, EPA has assumed that cyromazine does not have a common mechanism of toxicity with other substances. For information regarding EPA's efforts to determine which chemicals have a common mechanism of toxicity and to evaluate the cumulative effects of such chemicals, see EPA's website at *http://www.epa.gov/pesticides/cumulative*.

D. Safety Factor for Infants and Children

1. *In general*. Section 408(b)(2)(C) of FFDCA provides that EPA shall apply an additional tenfold (10X) margin of safety for infants and children in the case of threshold effects to account for prenatal and postnatal toxicity and the completeness of the database on toxicity and exposure unless EPA determines based on reliable data that a different margin of safety will be safe for infants and children. This additional margin of safety is commonly referred to as the FQPA SF. In applying this provision, EPA either retains the default value of 10X, or uses a different additional safety factor when reliable data available to EPA support the choice of a different factor.

2. *Prenatal and postnatal sensitivity*. Based on the available data, there is no quantitative and qualitative evidence of increased susceptibility observed following *in utero* cyromazine exposure to rats and rabbits or following prenatal/postnatal exposure in the 2–generation reproduction study. The database is considered adequate for selection of study endpoints and determination of a dose/response to characterize the potential prenatal or postnatal toxicity of cyromazine to infants and children. No increase in susceptibility was seen in developmental toxicity studies in rat and rabbit or reproductive toxicity studies in the rat. Toxicity to offspring was observed at dose levels the same or greater than those causing maternal or parental toxicity. Based on the results of developmental and reproductive toxicity studies, there is not a concern for increased qualitative and/or quantitative susceptibility following *in utero* exposure to cyromazine.

3. *Conclusion*. EPA has determined that reliable data show the safety of

infants and children would be adequately protected if the FQPA SF were reduced to 1X. That decision is based on the following findings:

i. The toxicity database for cyromazine is complete except for acute and subchronic neurotoxicity studies and immunotoxicity testing. Recent changes to 40 CFR part 158 make these studies (OPPTS Guideline 870.7800) required for pesticide registration; however, the available data for cyromazine do not show potential for neurotoxicity or immunotoxicity. Although specific neurotoxicity studies have not yet been submitted, there is no evidence of neurotoxicity in any study in the toxicity database for cyromazine. In the absence of specific immunotoxicity studies, EPA has evaluated the available cyromazine toxicity database to determine whether an additional database uncertainty factor is needed to account for potential immunotoxicity. No evidence of immunotoxicity was found. Due to the lack of evidence of immunotoxicity for cyromazine, EPA does not believe that conducting immunotoxicity testing will result in a NOAEL less than the cRfD NOAEL of 1.5 mg/kg bw/day already established for cyromazine. Consequently, the EPA believes the existing data are sufficient for endpoint selection for exposure/risk assessment scenarios and for evaluation of the requirements under the FQPA, and an additional database uncertainty factor does not need to be applied.

ii. There is no indication that cyromazine is a neurotoxic chemical and there is no need for a developmental neurotoxicity study or additional UFs to account for neurotoxicity.

iii. There is no evidence that cyromazine results in increased susceptibility in *in utero* rats or rabbits in the prenatal developmental studies or in young rats in the 2–generation reproduction study.

iv. There are no residual uncertainties identified in the exposure databases. The dietary food exposure assessments were performed based on 100 PCT and tolerance-level residues. EPA made conservative (protective) assumptions in the ground and surface water modeling used to assess exposure to cyromazine in drinking water.

E. Aggregate Risks and Determination of Safety

EPA determines whether acute and chronic pesticide exposures are safe by comparing aggregate exposure estimates to the aPAD and cPAD. The aPAD and cPAD represent the highest safe exposures, taking into account all appropriate SFs. EPA calculates the aPAD and cPAD by dividing the POD by all applicable UFs. For linear cancer risks, EPA calculates the probability of additional cancer cases given the estimated aggregate exposure. Short-, intermediate-, and chronic-term risks are evaluated by comparing the estimated aggregate food, water, and residential exposure to the POD to ensure that the MOE called for by the product of all applicable UFs is not exceeded.

1. *Acute risk*. An acute aggregate risk assessment takes into account exposure estimates from acute dietary consumption of food and drinking water. No adverse effect resulting from a single-oral exposure was identified and no acute dietary endpoint was selected. Therefore, cyromazine is not expected to pose an acute risk.

2. *Chronic risk*. Using the exposure assumptions described in this unit for chronic exposure, EPA has concluded that chronic exposure to cyromazine from food and water will utilize 85% of the cPAD for children 1 to 2 years old, the population group receiving the greatest exposure. There are no residential uses for cyromazine.

3. *Short- and intermediate term risk*. Short- and intermediate-term aggregate exposure takes into account short-term and intermediate-term residential exposure plus chronic exposure to food and water (considered to be a background exposure level). Cyromazine is not registered for any use patterns that would result in residential exposure. Therefore, the short-term and intermediate-term aggregate risk is the sum of the risk from exposure to cyromazine through food and water and will not be greater than the chronic aggregate risk.

4. *Aggregate cancer risk for U.S. population*. Cyromazine is classified as a "Group E" chemical (negative for carcinogenicity in humans). This classification is based on the lack of evidence of carcinogenicity in mice and rats. EPA does not expect cyromazine to pose a cancer risk.

5. *Determination of safety*. Based on these risk assessments, EPA concludes that there is a reasonable certainty that no harm will result to the general population, or to infants and children from aggregate exposure to cyromazine residues.

IV. Other Considerations

A. Analytical Enforcement Methodology

Methods AG-408 [high-performance liquid chromatography/ultraviolet (HPLC/UV)] and AG-417A [gas-liquid chromatography/nitrogen-phosphorus detector (GLC/NPD)] are the tolerance enforcement methods for cyromazine as published in the Pesticide Analytical Manual (PAM), Vol. II. These methods combined and with minor modifications comprise Method AG-621. The residue data submitted in support of this petition were generated using Methods AG-408 and AG-621. Method AG-621 has been adequately validated for use for the determination of residues of cyromazine in/on bulb vegetables, leafy Brassica vegetables, and turnip greens. Method AG-408 is adequate for enforcement of the proposed tolerance for residues of cyromazine.

B. International Residue Limits

There are currently no established Codex maximum residue limits (MRLs) for residues of cyromazine on succulent beans.

V. Conclusion

Therefore, tolerances are established for residues of cyromazine, *N*-cyclopropyl-1,3,5-triazine-2,4,6-triamine, in or on bean, succulent at 2.0 ppm.

VI. Statutory and Executive Order Reviews

This final rule establishes tolerances under section 408(d) of FFDCA in response to a petition submitted to the Agency. The Office of Management and Budget (OMB) has exempted these types of actions from review under Executive Order 12866, entitled *Regulatory Planning and Review* (58 FR 51735, October 4, 1993). Because this final rule has been exempted from review under Executive Order 12866, this final rule is not subject to Executive Order 13211, entitled *Actions Concerning Regulations That Significantly Affect Energy Supply, Distribution, or Use* (66 FR 28355, May 22, 2001) or Executive Order 13045, entitled *Protection of Children from Environmental Health Risks and Safety Risks* (62 FR 19885, April 23, 1997). This final rule does not contain any information collections subject to OMB approval under the Paperwork Reduction Act (PRA), 44 U.S.C. 3501 *et seq.*, nor does it require any special considerations under Executive Order 12898, entitled *Federal Actions to Address Environmental Justice in Minority Populations and Low-Income Populations* (59 FR 7629, February 16, 1994).

Since tolerances and exemptions that are established on the basis of a petition under section 408(d) of FFDCA, such as the tolerance in this final rule, do not require the issuance of a proposed rule, the requirements of the Regulatory

Flexibility Act (RFA) (5 U.S.C. 601 *et seq.*) do not apply.

This final rule directly regulates growers, food processors, food handlers, and food retailers, not States or tribes, nor does this action alter the relationships or distribution of power and responsibilities established by Congress in the preemption provisions of section 408(n)(4) of FFDCA. As such, the Agency has determined that this action will not have a substantial direct effect on States or tribal governments, on the relationship between the national government and the States or tribal governments, or on the distribution of power and responsibilities among the various levels of government or between the Federal Government and Indian tribes. Thus, the Agency has determined that Executive Order 13132, entitled *Federalism* (64 FR 43255, August 10, 1999) and Executive Order 13175, entitled *Consultation and Coordination with Indian Tribal Governments* (65 FR 67249, November 9, 2000) do not apply to this final rule. In addition, this final rule does not impose any enforceable duty or contain any unfunded mandate as described under Title II of the Unfunded Mandates Reform Act of 1995 (UMRA) (Public Law 104–4).

This action does not involve any technical standards that would require Agency consideration of voluntary consensus standards pursuant to section 12(d) of the National Technology Transfer and Advancement Act of 1995 (NTTAA), Public Law 104–113, section 12(d) (15 U.S.C. 272 note).

VII. Congressional Review Act

The Congressional Review Act, 5 U.S.C. 801 *et seq.*, generally provides that before a rule may take effect, the agency promulgating the rule must submit a rule report to each House of the Congress and to the Comptroller General of the United States. EPA will submit a report containing this rule and other required information to the U.S. Senate, the U.S. House of Representatives, and the Comptroller General of the United States prior to publication of this final rule in the **Federal Register**. This final rule is not a "major rule" as defined by 5 U.S.C. 804(2).

List of Subjects in 40 CFR Part 180

Environmental protection, Administrative practice and procedure, Agricultural commodities, Pesticides and pests, Reporting and recordkeeping requirements.

Dated: March 26, 2010.

Lois Rossi,

Director, Registration DivisionOffice of Pesticide Programs.

■ Therefore, 40 CFR chapter I is amended as follows:

PART 180—[AMENDED]

■ 1. The authority citation for part 180 continues to read as follows:

Authority: 21 U.S.C. 321(q), 346a and 371.

■ 2. Section 180.414 is amended by alphabetically adding the following commodity to the table in paragraph (a)(1) to read as follows:

§180.414 Cyromazine; tolerances for residues

(a)* * * (1)* * *

Commodity	Parts per million
* * *	* *
Bean, succulent	2.0
* * *	* *

* * * * *

[FR Doc. 2010–9741 Filed 4–27–10; 8:45 am]

BILLING CODE 6560–50–S

ENVIRONMENTAL PROTECTION AGENCY

40 CFR Part 180

[EPA–HQ–OPP–2009–0162; FRL–8817–3]

Difenoconazole Pesticide Tolerances

AGENCY: Environmental Protection Agency (EPA).

ACTION: Final rule.

SUMMARY: This regulation establishes tolerances for residues of the fungicide difenoconazole in or on: Almond, hulls; brassica, head and stem, subgroup 5A; brassica, leafy green, subgroup 5B; citrus, dried pulp; citrus, oil; fruit, citrus, group 10; grape; grape, raisin; nut, tree, group 14; onion, bulb, subgroup 3-07A; onion, green, subgroup 3-07B; pistachio; and vegetable, cucurbit, group 9. EPA is also revising the difenoconazole crop and animal tolerance expressions; deleting all section 18 difenoconazole tolerances that are no longer needed as a result of this action; reinstating tolerances for wheat forage, wheat grain, and wheat straw, which were inadvertently removed when previous tolerances were established; correcting the existing tolerance for beet, sugar; and deleting the grape import superscript. Syngenta Crop Protection, Inc. requested the new tolerances under the Federal Food, Drug, and Cosmetic Act (FFDCA).

DATES: This regulation is effective April 28, 2010. Objections and requests for hearings must be received on or before June 28, 2010, and must be filed in accordance with the instructions provided in 40 CFR part 178 (see also Unit I.C. of the **SUPPLEMENTARY INFORMATION**).

ADDRESSES: EPA has established a docket for this action under docket identification (ID) number EPA–HQ–OPP–2009–0162. All documents in the docket are listed in the docket index available at *http://www.regulations.gov*. Although listed in the index, some information is not publicly available, e.g., Confidential Business Information (CBI) or other information whose disclosure is restricted by statute. Certain other material, such as copyrighted material, is not placed on the Internet and will be publicly available only in hard copy form. Publicly available docket materials are available in the electronic docket at *http://www.regulations.gov*, or, if only available in hard copy, at the OPP Regulatory Public Docket in Rm. S–4400, One Potomac Yard (South Bldg.), 2777 S. Crystal Dr., Arlington, VA. The Docket Facility is open from 8:30 a.m. to 4 p.m., Monday through Friday, excluding legal holidays. The Docket Facility telephone number is (703) 305–5805.

FOR FURTHER INFORMATION CONTACT: Rosemary Kearns, Registration Division (7505P), Office of Pesticide Programs, Environmental Protection Agency, 1200 Pennsylvania Ave., NW., Washington, DC 20460–0001; telephone number: (703) 305–5611; e-mail address: *kearns.rosemary@epa.gov*.

SUPPLEMENTARY INFORMATION:

I. General Information

A. Does this Action Apply to Me?

You may be potentially affected by this action if you are an agricultural producer, food manufacturer, or pesticide manufacturer. Potentially affected entities may include, but are not limited to those engaged in the following activities:

- Crop production (NAICS code 111).
- Animal production (NAICS code 112).
- Food manufacturing (NAICS code 311).
- Pesticide manufacturing (NAICS code 32532).

This listing is not intended to be exhaustive, but rather to provide a guide for readers regarding entities likely to be

affected by this action. Other types of entities not listed in this unit could also be affected. The North American Industrial Classification System (NAICS) codes have been provided to assist you and others in determining whether this action might apply to certain entities. If you have any questions regarding the applicability of this action to a particular entity, consult the person listed under **FOR FURTHER INFORMATION CONTACT**.

B. How Can I Get Electronic Access to Other Related Information?

You may access a frequently updated electronic version of EPA's tolerance regulations at 40 CFR part 180 through the Government Printing Office's e-CFR cite at *http://www.gpoaccess.gov/ecfr*. To access the OPPTS Harmonized Test Guidelines referenced in this document electronically, please go to *http://www.epa.gov/oppts* and select "Test Methods & Guidelines" on the left-side navigation menu.

C. Can I File an Objection or Hearing Request?

Under section 408(g) of FFDCA, 21 U.S.C. 346a, any person may file an objection to any aspect of this regulation and may also request a hearing on those objections. You must file your objection or request a hearing on this regulation in accordance with the instructions provided in 40 CFR part 178. To ensure proper receipt by EPA, you must identify docket ID number EPA–HQ–OPP–2009–0162 in the subject line on the first page of your submission. All requests must be in writing, and must be mailed or delivered to the Hearing Clerk as required by 40 CFR part 178 on or before June 28, 2010.

In addition to filing an objection or hearing request with the Hearing Clerk as described in 40 CFR part 178, please submit a copy of the filing that does not contain any CBI for inclusion in the public docket that is described in **ADDRESSES**. Information not marked confidential pursuant to 40 CFR part 2 may be disclosed publicly by EPA without prior notice. Submit this copy, identified by docket ID number EPA–HQ–OPP–2009–0162, by one of the following methods:

- *Federal eRulemaking Portal*: *http://www.regulations.gov*. Follow the on-line instructions for submitting comments.
- *Mail*: Office of Pesticide Programs (OPP) Regulatory Public Docket (7502P), Environmental Protection Agency, 1200 Pennsylvania Ave., NW., Washington, DC 20460–0001.
- *Delivery*: OPP Regulatory Public Docket (7502P), Environmental Protection Agency, Rm. S–4400, One Potomac Yard (South Bldg.), 2777 S. Crystal Dr., Arlington, VA. Deliveries are only accepted during the Docket Facility's normal hours of operation (8:30 a.m. to 4 p.m., Monday through Friday, excluding legal holidays). Special arrangements should be made for deliveries of boxed information. The Docket Facility telephone number is (703) 305–5805.

II. Petition for Tolerance

In the **Federal Register** of April 8, 2009 (74 FR 15971) (FRL–8407–4), EPA issued a notice pursuant to section 408(d)(3) of FFDCA, 21 U.S.C. 346a(d)(3), announcing the filing of a pesticide petition (PP 8F7482) by Syngenta Crop Protection, Inc., P.O. Box 18300, Greensboro, NC 27419. The petition requested that 40 CFR 180.475 be amended by establishing tolerances for residues of the fungicide difenoconazole, 1-[2-[2-chloro-4-(4-chlorophenoxy)phenyl]-4-methyl-1,3-dioxolan-2-ylmethyl]-1H-1,2,4-triazole, in or on: Almond, hulls at 7 ppm; brassica, head and stem, subgroup 5A at 1.9 ppm; brassica, leafy green, subgroup 5B at 30 ppm; citrus, dried pulp at 2.5 ppm; citrus, oil at 28 ppm; fruit, citrus, group 10 at 0.6 ppm; grape at 4 ppm; grape, raisin at 14 ppm; nut, tree, group 14 at 0.03 ppm; onion, bulb, subgroup 3-07A at 6 ppm; onion, green, bulb, subgroup 3-07B at 0.15 ppm; pistachios at 0.03 ppm; vegetable, cucurbit, group 9 at 0.7 ppm. Although a tree nut group tolerance is being established, a separate pistachio tolerance is needed because pistachios are not currently part of the tree nut, group 14. That notice referenced a summary of the petition prepared by Syngenta Crop Protection, Inc., the registrant, which is available to the public in the docket, *http://www.regulations.gov*. There were no comments received in response to the notice of filing.

Based upon review of the data supporting the petition, EPA has increased the proposed tolerance for both brassica, leafy green, subgroup 5B; and onion, green, subgroup 3-07B. EPA has decreased the proposed tolerance for citrus, dried pulp; citrus, oil; grape, raisin; and onion, bulb, subgroup 3-07A. EPA is also revising the difenoconazole crop and animal tolerance expressions; deleting all difenoconazole section 18 tolerances that are no longer needed as a result of this action; reinstating tolerances for wheat forage, wheat grain, and wheat straw, which were inadvertently removed when previous tolerances were established; deleting the grape import superscript designation; and correcting the existing tolerance for beet, sugar. The reasons for these changes are explained in Unit IV.D.

III. Aggregate Risk Assessment and Determination of Safety

Section 408(b)(2)(A)(i) of FFDCA allows EPA to establish a tolerance (the legal limit for a pesticide chemical residue in or on a food) only if EPA determines that the tolerance is "safe." Section 408(b)(2)(A)(ii) of FFDCA defines "safe" to mean that "there is a reasonable certainty that no harm will result from aggregate exposure to the pesticide chemical residue, including all anticipated dietary exposures and all other exposures for which there is reliable information." This includes exposure through drinking water and in residential settings, but does not include occupational exposure. Section 408(b)(2)(C) of FFDCA requires EPA to give special consideration to exposure of infants and children to the pesticide chemical residue in establishing a tolerance and to "ensure that there is a reasonable certainty that no harm will result to infants and children from aggregate exposure to the pesticide chemical residue. . . ."

Consistent with section 408(b)(2)(D) of FFDCA, and the factors specified in section 408(b)(2)(D) of FFDCA, EPA has reviewed the available scientific data and other relevant information in support of this action. EPA has sufficient data to assess the hazards of and to make a determination on aggregate exposure for the petitioned-for tolerances for residues of difenoconazole in or on almond, hulls at 7.0 ppm; brassica, head and stem, subgroup 5A at 1.9 ppm; brassica, leafy greens, subgroup 5B at 35 ppm; citrus, dried pulp at 2.0 ppm; citrus, oil at 25 ppm; fruit, citrus, group 10 at 0.60 ppm; grape at 4.0 ppm; grape, raisin at 6.0 ppm; nut, tree, group 14 at 0.03 ppm; onion, bulb, subgroup 3-07A at 0.20 ppm; onion, green, subgroup 3-07B at 6.0 ppm; pistachio at 0.03 ppm; and vegetable, cucurbit, group 9 at 0.70 ppm. EPA's assessment of exposures and risks associated with establishing tolerances follows.

A. Toxicological Profile

EPA has evaluated the available toxicity data and considered its validity, completeness, and reliability as well as the relationship of the results of the studies to human risk. EPA has also considered available information concerning the variability of the sensitivities of major identifiable subgroups of consumers, including infants and children.

Difenoconazole possesses low acute toxicity by the oral, dermal and

inhalation routes of exposure. It is not considered to be an eye or skin irritant and is not a sensitizer. Difenoconazole exhibits some evidence of neurotoxicity in the database, but the effects are transient or occur at doses exceeding the limit dose. It is not mutagenic and it is not a developmental or reproductive toxicant. Chronic effects in rats and mice are seen as cumulative decreases in body weight gains.

No evidence of carcinogenicity was seen in rats. Evidence for carcinogenicity was seen in mice where liver tumors were induced at doses which were considered to be excessively high for carcinogenicity testing. Treatment-related non-neoplastic lesions were confined to the liver. Difenoconazole is classified as a possible human carcinogen. Based on excessive toxicity observed at the doses at which tumors were seen, the absence of tumors at the lower doses, and the absence of genotoxic effects, EPA considers the cancer effects to be a threshold effect.

Specific information on the studies received and the nature of the adverse effects caused by difenoconazole as well as the no-observed-adverse-effect-level (NOAEL) and the lowest-observed-adverse-effect-level (LOAEL) from the toxicity studies can be found at *http://www.regulations.gov* in document "Difenoconazole FQPA Human Health Risk Assessment for the Section 3 Registration of Difenoconazole New Uses on Bulb Vegetables, Brassica Leafy Vegetables, Cucurbit Vegetables, Citrus Fruits, Grapes, Pistachios, and Tree Nuts" at pages 51–63 in docket ID number EPA–HQ–OPP–2009–0162.

B. Toxicological Endpoints

For hazards that have a threshold below which there is no appreciable risk, a toxicological point of departure (POD) is identified as the basis for derivation of reference values for risk assessment. The POD may be defined as the highest dose at which no adverse effects are observed (the NOAEL) in the toxicology study identified as appropriate for use in risk assessment. However, if a NOAEL cannot be determined, the lowest dose at which adverse effects of concern are identified (the LOAEL) or a benchmark dose (BMD) approach is sometimes used for risk assessment. Uncertainty/safety factors (UFs) are used in conjunction with the POD to take into account uncertainties inherent in the extrapolation from laboratory animal data to humans and in the variations in sensitivity among members of the human population as well as other unknowns. Safety is assessed for acute and chronic dietary risks by comparing aggregate food and water exposure to the pesticide to the acute population adjusted dose (aPAD) and chronic population adjusted dose (cPAD). The aPAD and cPAD are calculated by dividing the POD by all applicable UFs. Aggregate short-, intermediate-, and chronic-term risks are evaluated by comparing food, water, and residential exposure to the POD to ensure that the margin of exposure (MOE) called for by the product of all applicable UFs is not exceeded. This latter value is referred to as the level of concern (LOC).

For non-threshold risks, the Agency assumes that any amount of exposure will lead to some degree of risk. Thus, the Agency estimates risk in terms of the probability of an occurrence of the adverse effect greater than that expected in a lifetime. For more information on the general principles EPA uses in risk characterization and a complete description of the risk assessment process, see *http://www.epa.gov/pesticides/factsheets/riskassess.htm*.

A summary of the toxicological endpoints for difenoconazole used for human risk assessment can be found at *http://www.regulations.gov* in document "Difenoconazole FQPA Human Health Risk Assessment for the Section 3 Registration of Difenoconazole New Uses on Bulb Vegetables, Brassica Leafy Vegetables, Cucurbit Vegetables, Citrus Fruits, Grapes, Pistachios, and Tree Nuts" at pages 16–18 in docket ID number EPA–HQ–OPP–2009–0162.

C. Exposure Assessment

1. *Dietary exposure from food and feed uses*. In evaluating dietary exposure to difenoconazole, EPA considered exposure under the petitioned-for tolerances as well as all existing difenoconazole tolerances in 40 CFR 180.475. EPA assessed dietary exposures from difenoconazole in food as follows:

i. *Acute exposure*. Quantitative acute dietary exposure and risk assessments are performed for a food-use pesticide, if a toxicological study has indicated the possibility of an effect of concern occurring as a result of a 1–day or single exposure.

In estimating acute dietary exposure, EPA used food consumption information from the United States Department of Agriculture (USDA) 1994–1996 and 1998 nationwide Continuing Surveys of Food Intake by Individuals (CSFII). As to residue levels in food, EPA assumed tolerance-level residues, 100% crop treated for all the registered and proposed crops, and default processing factors.

ii. *Chronic exposure*. In conducting the chronic dietary exposure assessment, EPA used the food consumption data from the USDA 1994–1996 and 1998 CSFII. As to residue levels in food, EPA assumed tolerance-level residues for some commodities, field trial residues for the majority of commodities, and 100% crop treated. EPA used experimental processing factors for some crops and default processing factors for the remainder.

iii. *Cancer*. A quantitative exposure assessment to evaluate cancer risk is unnecessary. The cancer NOAEL for difenoconazole is higher than the NOAEL used as a Point of Departure in calculating the chronic RfD. Therefore, chronic exposure would be equal to or greater than the exposure value used in assessing cancer risk, and the chronic dietary risk estimate is protective of any cancer effects.

iv. *Anticipated residue and percent crop treated (PCT) information*. EPA did not use PCT information in the dietary assessment for difenoconazole. EPA did use anticipated residues in the chronic dietary assessment for difenoconazole; field trial residues and experimental processing factors were used for some commodities.

Section 408(b)(2)(E) of FFDCA authorizes EPA to use available data and information on the anticipated residue levels of pesticide residues in food and the actual levels of pesticide residues that have been measured in food. If EPA relies on such information, EPA must require pursuant to FFDCA section 408(f)(1) that data be provided 5 years after the tolerance is established, modified, or left in effect, demonstrating that the levels in food are not above the levels anticipated. For the present action, EPA will issue such Data Call-Ins as are required by FFDCA section 408(b)(2)(E) and authorized under FFDCA section 408(f)(1). Data will be required to be submitted no later than 5 years from the date of issuance of these tolerances.

2. *Dietary exposure from drinking water*. The Agency used screening level water exposure models in the dietary exposure analysis and risk assessment for difenoconazole in drinking water. These simulation models take into account data on the physical, chemical, and fate/transport characteristics of difenoconazole. Further information regarding EPA drinking water models used in pesticide exposure assessment can be found at *http://www.epa.gov/oppefed1/models/water/index.htm*.

Based on using PRZM/EXAMS and Screening Concentration in Ground Water (SCI-GROW) models, the estimated drinking water concentrations

(EDWCs) of difenoconazole for acute exposures are estimated to be 15.8 parts per billion (ppb) for surface water and 0.0123 ppb for ground water. EDWCs for chronic exposures for non-cancer assessments are estimated to be 10.4 ppb for surface water and 0.0123 ppb for ground water.

EDWCs for chronic exposures for cancer assessments are estimated to be 7.62 ppb for surface water and 0.0123 ppb for ground water. These EDWCs are the same or lower than the EDWC for chronic non-cancer exposure.

Modeled estimates of drinking water concentrations were directly entered into the dietary exposure model.

For acute dietary risk assessment, the water concentration value of 15.8 ppb was used to assess the contribution to drinking water.

For chronic dietary risk assessment, the water concentration of value 10.4 ppb was used to assess the contribution to drinking water.

3. *From non-dietary exposure*. The term "residential exposure" is used in this document to refer to non-occupational, non-dietary exposure (e.g., for lawn and garden pest control, indoor pest control, termiticides, and flea and tick control on pets).

Difenoconazole is currently registered for the following uses that could result in residential exposures: ornamentals. EPA assessed residential exposure using the following assumptions: No new residential uses are being requested at this time. However, adults and adolescents may be exposed to difenoconazole from its currently registered use on ornamentals.

4. *Cumulative effects from substances with a common mechanism of toxicity*. Section 408(b)(2)(D)(v) of FFDCA requires that, when considering whether to establish, modify, or revoke a tolerance, the Agency consider "available information" concerning the cumulative effects of a particular pesticide's residues and "other substances that have a common mechanism of toxicity." Difenoconazole is a member of the triazole-containing class of pesticides, often referred to as the conazoles. EPA is not currently following a cumulative risk approach based on a common mechanism of toxicity for the conazoles. The conazole pesticides, as a whole, tend to exhibit carcinogenic, developmental, reproductive, and/or neurological effects in mammals. Additionally, all the members of this class of compounds are capable of forming, via environmental and metabolic activities, 1,2,4-triazole, triazolylalanine and/or triazolylacetic acid. These metabolites have also been shown to cause developmental, reproductive, and/or neurological effects. Structural similarities and sharing a common effect does not constitute a common mechanism of toxicity. Evidence is needed to establish that the chemicals operate by the same, or essentially the same sequence of major biochemical events. Hence, the underlying basis of toxicity is the same, or essentially the same for each chemical. A number of potential events could contribute to the toxicity of conazoles (e.g., altered cholesterol levels, stress responses, altered DNA methylation). At this time, there is not sufficient evidence to determine whether conazoles share common mechanisms of toxicity. Without such understanding, there is no basis to make a common mechanism of toxicity finding for the diverse range of effects found. Investigations into the conazoles are currently being undertaken by EPA's Office of Research and Development. When the results of this research are available, the Agency will make a determination of whether there is a common mechanism of toxicity and, therefore, a basis for assessing cumulative risk. For information regarding EPA's efforts to determine which chemicals have a common mechanism of toxicity and to evaluate the cumulative effects of such chemicals, see EPA's website at *http://www.epa.gov/pesticides/cumulative*.

Triazole-derived pesticides can form the common metabolite 1,2,4-triazole and three triazole conjugates (triazole alanine, triazole acetic acid, and triazolylpyruvic acid). To support existing tolerances and to establish new tolerances for triazole-derivative pesticides, including prothioconazole, EPA conducted a human health risk assessment for exposure to 1,2,4-triazole, triazole alanine, and triazole acetic acid resulting from the use of all current and pending uses of any triazole-derived fungicide as of September 1, 2005. The risk assessment is a highly conservative, screening-level evaluation in terms of hazards associated with common metabolites (e.g., use of a maximum combination of uncertainty factors) and potential dietary and non-dietary exposures (i.e., high end estimates of both dietary and non-dietary exposures). In addition, the Agency retained the additional 10X FQPA safety factor for the protection of infants and children. The assessment included evaluations of risks for various subgroups, including those comprised of infants and children. The Agency's September 1, 2005 risk assessment can be found in the propiconazole reregistration docket at *http://www.regulations.gov* (docket ID EPA–HQ–OPP–2005–0497).

In October and December of 2008, EPA updated the dietary and aggregate risk assessments for exposure to 1,2,4-triazole, triazole alanine, triazole acetic acid, and triazolylpyruvic acid resulting from the use of all current and pending uses of any triazole-derived fungicide to support existing tolerances and to establish new tolerances for new uses of metconazole (canola, corn, cotton, and sugarcane; PP 7F7221, 7F7292, 08FL03), propiconazole (beets, parsley, and pineapple; PP 7F7300), prothioconazole (wheat and barley; PP 7F7279), and tetraconazole (grapes; PP 7E7273). These updated dietary and aggregate assessments are below the Agency's level of concern. These updated triazole risk assessments can be found in the rule's docket (EPA–HQ–OPP–2008–0327) and the following associated dockets at http://www.regulations.gov.

D. Safety Factor for Infants and Children

1. *In general*. Section 408(b)(2)(C) of FFDCA provides that EPA shall apply an additional tenfold (10X) margin of safety for infants and children in the case of threshold effects to account for prenatal and postnatal toxicity and the completeness of the database on toxicity and exposure unless EPA determines based on reliable data that a different margin of safety will be safe for infants and children. This additional margin of safety is commonly referred to as the FQPA SF. In applying this provision, EPA either retains the default value of 10X, or uses a different additional safety factor when reliable data available to EPA support the choice of a different factor.

2. *Prenatal and postnatal sensitivity*. The Agency determined that the available studies indicate no increased susceptibility of rats or rabbits to *in utero* and/or postnatal exposure to difenoconazole. In the prenatal developmental toxicity studies in rats and rabbits and the two-generation reproduction study in rats, toxicity to the fetuses/offspring, when observed, occurred at equivalent or higher dosed than in the maternal/parental animals. The developmental toxicity was manifested as alterations in fetal ossifications at 171 mg/kg/day; the developmental NOAEL was 85 mg/kg/day. In a developmental toxicity study in rabbits, maternal and developmental toxicity were seen at the same dose level (75 mg/kg/day). Maternal toxicity in rabbits were manifested as decreased in body weight gain and decreased in food consumption, while developmental toxicity was manifested as decreased

fetal weight. In a 2-generation reproduction study in rats, there were decreases in maternal body weight gain and decreases in body weights of F1 males at the LOAEL of 12.5 mg/kg/day; the parental systemic and off spring toxicity NOAEL was 1.25 mg/kg/day.

3. *Conclusion*. EPA has determined that reliable data show the safety of infants and children would be adequately protected if the FQPA SF were reduced to 1X. That decision is based on the following findings:

i. The toxicity database for difenoconazole is adequate for conducting this risk assessment. In accordance with 40 CFR part 158 toxicology data requirements, an immunotoxicity study (OPPTS Harmonized Guideline 870.7800) is required for difenoconazole. In the absence of specific immunotoxicity studies, EPA has evaluated the available difenoconazole toxicity data to determine whether an additional database uncertainty factor is needed to account for potential immunotoxicity. There are no indications in the available studies that organs associated with immune function, such as the thymus and spleen, are affected by difenoconazole, and difenoconazole does not belong to a class of chemicals (e.g., the organotins, heavy metals, or halogenated aromatic hydrocarbons) that would be expected to be immunotoxic. Therefore, EPA does not believe that conducting immunotoxicity testing will result in a point of departure lower than those already selected for difenoconazole risk assessment, and an additional database uncertainty factor is not needed to account for the lack of this study.

ii. Difenoconazole exhibits some evidence of neurotoxicity in the database, but the effects are transient or occur at doses exceeding the limit dose. There is no need for a developmental neurotoxicity study or additional UFs to account for neurotoxicity.

iii. There is no indication of increased susceptibility of rats or rabbits fetuses to *in utero* and/or postnatal exposure in the developmental and reproductive toxicity data.

iv. Although some storage stability data are still required, tolerances and field trial data used in the risk assessment are sufficiently high, that even if residues degrade in frozen storage prior to analysis, the risk assessment will be protective. Although a confined rotational crop study is still required, the plant back interval is sufficiently long that no detectable residues are expected in rotated commodities. Furthermore, conservative (protective) acute dietary food exposure assessments were performed based on 100% crop trested and tolerance-level residues. Chronic dietary exposure assessments were based on tolerance-level residues for some commodities, field trial residues for the majority of commodities, and experimental processing factor for some crops, and 100% crop treated. The field trial data and experimental processing factors from processing studies are based on reliable data from the maximum use rate, and are unlikely to understate the residues. EPA also made conservative (protective) assumptions in the ground water and surface water modeling used to assess exposure to difenoconazole in drinking water. EPA used similarly conservative assumptions to assess post-application exposure of children as well as incidental oral exposure of toddlers. These assessments will not underestimate the exposure and risks posed by difenoconazole.

E. Aggregate Risks and Determination of Safety

EPA determines whether acute and chronic pesticide exposures are safe by comparing aggregate exposure estimates to the aPAD and cPAD. The aPAD and cPAD represent the highest safe exposures, taking into account all appropriate SFs. EPA calculates the aPAD and cPAD by dividing the POD by all applicable UFs. For linear cancer risks, EPA calculates the probability of additional cancer cases given the estimated aggregate exposure. Short-, intermediate-, and chronic-term risks are evaluated by comparing the estimated aggregate food, water, and residential exposure to the POD to ensure that the MOE called for by the product of all applicable UFs is not exceeded.

1. *Acute risk*. Using the exposure assumptions described in this unit for acute exposure, EPA has concluded that acute exposure to difenoconazole from food and water will utilize 16% of the cPAD for children 1–2 years old, the population group receiving the greatest exposure.

2. *Chronic risk*. Using the exposure assumptions described in this unit for chronic exposure, EPA has concluded that chronic exposure to difenoconazole from food and water will utilize 44% of the cPAD for children 1–2 years old, the population group receiving the greatest exposure. Based on the explanation in Unit III.C.3., regarding residential use patterns, chronic residential exposure to residues of difenoconazole are not expected.

3. *Short-term risk*. Short-term aggregate exposure takes into account short-term residential exposure plus chronic exposure to food and water (considered to be a background exposure level).

Difenoconazole is currently registered for ornamentals that could result in short-term residential exposure and the Agency has determined that it is appropriate to aggregate chronic exposure through food and water with short-term residential exposures to difenoconazole.

Using the exposure assumptions described in this unit for short-term exposures, EPA has concluded the combined short-term food, water, and residential exposures aggregated result in aggregate MOEs of at least 180. Values higher than 100 are not of concern. The proposed residential scenarios result in exposure only to adults. Therefore, short-term aggregate assessments were not conducted for infants and children.

4. *Intermediate-term risk*. Intermediate-term aggregate exposure takes into account intermediate-term residential exposure plus chronic exposure to food and water (considered to be a background exposure level).

Difenoconazole is not registered for any use patterns that would result in intermediate-term residential exposure. Therefore, the intermediate-term aggregate risk is the sum of the risk from exposure to difenoconazole through food and water, which has already been addressed, and will not be greater than the chronic aggregate risk.

5. *Aggregate cancer risk for U.S. population*. As discussed above the chronic dietary risk assessment is protective of any cancer effects.

6. *Determination of safety*. Based on these risk assessments, EPA concludes that there is a reasonable certainty that no harm will result to the general population, or to infants and children from aggregate exposure to difenoconazole residues.

IV. Other Considerations

A. Analytical Enforcement Methodology

Adequate analytical methodology is available to enforce the tolerances listed under 40 CFR 180.475. Method AG-575B (gas chromatography/nitrogen-phosphorus detection) is available for enforcement in crops, and Method AG-676 (gas chromatography/mass selective detection) is available for confirmation. Method AG-676A is available for enforcement and confirmation in canola and barley. Method REM 147.07b (liquid chromatography/mass spectrometry/mass spectrometry) is available for enforcement in livestock and methods AG-544A (gas chromatography/nitrogen-phosphorus

detection) and REM 147.06 (high performance liquid chromatography/UV detection), which determine difenoconazole and CGA 205375, respectively, are available for confirmation. These methods may be requested from: Chief, Analytical Chemistry Branch, Environmental Science Center, 701 Mapes Rd., Ft. Meade, MD 20755–5350; telephone number: (401) 305–2905; e-mail address: *residuemethods@epa.gov*.

B. International Residue Limits

Codex Maximum Residue Limits (MRLs) for residues of difenoconazole *per se* have been established at 0.3 ppm for leek, 0.5 ppm for broccoli, 0.2 ppm for Brussels sprouts, 0.2 ppm for cabbage, 0.2 ppm for cauliflower, and 0.1 ppm for grape. Canadian and Mexican MRLs have been established for difenoconazole; however, no MRLs have been established for the requested crops. Based on the submitted field trial data for brassica vegetables, green onions, and grapes, harmonization with established Codex MRLs is not possible because the MRLs for brassica vegetables, leek, and grape are lower than residue values seen in U.S. field trials. This is a result of differences in agricultural practices.

C. Response to Comments

There were no public comments received.

D. Revisions to Petitioned-For Tolerances

1. The existing time-limited section 18 tolerances in/on almond and almond, hulls are 0.05 ppm, and 5.0 ppm, respectively. This rule establishes new tolerances in/on the nut, tree, group 14 (which includes almonds); and on almond, hulls, at 0.03 ppm and 7.0 ppm, respectively. As explained below, keeping the currently established higher section 18 tolerance in/on almond (0.05 ppm) is not needed and is being revoked, and because a new higher tolerance for almond, hulls is being established at 7.0 ppm, the currently established lower section 18 tolerances in/on almond, hulls (5.0 ppm) is also being revoked.

The section 18 tolerances were based on the same almond field trial study used to establish the new section 3 nut, tree, group 14 tolerance, and to revise the almond, hulls tolerance. The original data were submitted by Interregional Research Project Number 4 (IR-4) in support of the section 18 and then samples were transferred to Syngenta where they were re-analyzed and the new re-analysis data were submitted in support of this section 3 petition. The differences in the analyses/re-analyses data of the same almond and almond hulls samples is the reason for the differences in section 18 and section 3 tolerance determinations. It should be noted that in the original data submitted by IR-4, residues in/on all nutmeat samples were determined to be <0.05 ppm and so the section 18 tolerance in/on almonds was set at 0.05 ppm.

2. The existing time-limited section 18 tolerances for cantaloupe, cucumber, and watermelon are all 1.0 ppm. This rule establishes a new tolerance for vegetable, cucurbit group 9 (which includes all three crops) at a lower tolerance of 0.70 ppm. The section 18 tolerances are based on translation from available fruiting vegetable data using a 1–day PHI. For this petition, Syngenta has provided actual cucurbit vegetable data reflecting the section 18 use rate and a more conservative 0–day PHI, which resulted in a lower tolerance. Therefore, separate higher tolerances at 1.0 ppm are not needed for cantaloupe, cucumber, and watermelon, and the section 18 tolerances in/on these crops are being revoked.

3. Based upon review of the residue data supporting the petition, EPA has increased the proposed tolerance for brassica, leafy green, subgroup 5B from 30 ppm to 35 ppm.

4. The registrant requested a tolerance for bulb onions, subgroup 3-07A at 6.0 ppm, and for green onions, subgroup 3-07B at 0.15 ppm. These proposed tolerances appear to have been transposed by the petitioner. Based on the submitted residue data, EPA is establishing tolerances at 0.20 ppm for onions, bulb, subgroup 3-07A and at 6.0 ppm for onions, green, subgroup 3-07B.

5. EPA has decreased the proposed tolerances for citrus, dried pulp (2.5 ppm); citrus, oil (28 ppm); and grape, raisin (14 ppm). The processing data indicate the proposed tolerances for processed commodities are too high and that tolerances of 2.0 ppm for citrus, dried pulp; 25 ppm for citrus, oil; and 6.0 ppm for grape, raisin are appropriate.

6. EPA is revising the existing difenoconazole tolerance expressions in paragraphs (a)(1) and (a)(2) to clarify what needs to be analyzed for tolerance compliance.

7. Tolerances are being reinstated at 0.1 ppm for wheat forage; wheat grain; and wheat straw. These tolerances were inadvertently removed from 40 CFR 180.475(a) as a result of a rulemaking that added new difenoconazole tolerances but used inaccurate terminology as to how the CFR was to be amended. (73 FR 1503, January 9, 2008) (FRL–8343–5).

8. The petitioner previously requested beet, sugar at 0.3 ppm via petition 6F7115 which published August 22, 2007. (72 FR 47010) (FRL–8142–5). The associated rule for that petition published January 9, 2008, and erroneously established this tolerance at 0.01 ppm even though the preamble to that rule noted that the petition sought a tolerance level 0.3 ppm. (73 FR 1503, January 9, 2008). Therefore, the existing beet sugar tolerance is being revised from 0.01 to 0.3 ppm to correct this inadvertent error.

9. Revising the existing grape tolerance and deleting the import superscript designation which is no longer needed.

V. Conclusion

Therefore, tolerances are established for residues of the fungicide, difenoconazole, 1-[2-[2-chloro-4-(4-chlorophenoxy)phenyl]-4methyl-1,3-dioxolan-2-ylmethyl]-1H-1,2,4-triazole, in or on almond, hulls at 7.0 ppm; brassica, head and stem, subgroup 5A at 1.9 ppm; brassica, leafy greens, subgroup 5B at 35 ppm; citrus, dried pulp at 2.0 ppm; citrus, oil at 25 ppm; fruit, citrus, group 10 at 0.60 ppm; grape at 4.0 ppm; grape, raisin at 6.0 ppm; nut, tree, group 14 at 0.03 ppm; onion, bulb, subgroup 3-07A at 0.20 ppm; onion, green, subgroup 3-07B at 6.0 ppm; pistachio at 0.03 ppm; and vegetable, cucurbit, group 9 at 0.70 ppm. This rule also revises the crop and animal difenoconazole tolerance expressions; deletes all section 18 difenoconazole tolerances that are no longer needed as a result of this action; reinstates 0.1 ppm tolerances for wheat forage, wheat grain, and wheat straw; corrects the existing tolerance for beet, sugar to 0.3 ppm; and deletes the grape import superscript designation.

VI. Statutory and Executive Order Reviews

This final rule establishes tolerances under section 408(d) of FFDCA in response to a petition submitted to the Agency. The Office of Management and Budget (OMB) has exempted these types of actions from review under Executive Order 12866, entitled *Regulatory Planning and Review* (58 FR 51735, October 4, 1993). Because this final rule has been exempted from review under Executive Order 12866, this final rule is not subject to Executive Order 13211, entitled *Actions Concerning Regulations That Significantly Affect Energy Supply, Distribution, or Use* (66 FR 28355, May 22, 2001) or Executive Order 13045, entitled *Protection of Children from*

Environmental Health Risks and Safety Risks (62 FR 19885, April 23, 1997). This final rule does not contain any information collections subject to OMB approval under the Paperwork Reduction Act (PRA), 44 U.S.C. 3501 *et seq.*, nor does it require any special considerations under Executive Order 12898, entitled *Federal Actions to Address Environmental Justice in Minority Populations and Low-Income Populations* (59 FR 7629, February 16, 1994).

Since tolerances and exemptions that are established on the basis of a petition under section 408(d) of FFDCA, such as the tolerance in this final rule, do not require the issuance of a proposed rule, the requirements of the Regulatory Flexibility Act (RFA) (5 U.S.C. 601 *et seq.*) do not apply.

This final rule directly regulates growers, food processors, food handlers, and food retailers, not States or tribes, nor does this action alter the relationships or distribution of power and responsibilities established by Congress in the preemption provisions of section 408(n)(4) of FFDCA. As such, the Agency has determined that this action will not have a substantial direct effect on States or tribal governments, on the relationship between the national government and the States or tribal governments, or on the distribution of power and responsibilities among the various levels of government or between the Federal Government and Indian tribes. Thus, the Agency has determined that Executive Order 13132, entitled *Federalism* (64 FR 43255, August 10, 1999) and Executive Order 13175, entitled *Consultation and Coordination with Indian Tribal Governments* (65 FR 67249, November 9, 2000) do not apply to this final rule. In addition, this final rule does not impose any enforceable duty or contain any unfunded mandate as described under Title II of the Unfunded Mandates Reform Act of 1995 (UMRA) (Public Law 104–4).

This action does not involve any technical standards that would require Agency consideration of voluntary consensus standards pursuant to section 12(d) of the National Technology Transfer and Advancement Act of 1995 (NTTAA), Public Law 104–113, section 12(d) (15 U.S.C. 272 note).

VII. Congressional Review Act

The Congressional Review Act, 5 U.S.C. 801 *et seq.*, generally provides that before a rule may take effect, the agency promulgating the rule must submit a rule report to each House of the Congress and to the Comptroller General of the United States. EPA will submit a report containing this rule and other required information to the U.S. Senate, the U.S. House of Representatives, and the Comptroller General of the United States prior to publication of this final rule in the **Federal Register**. This final rule is not a "major rule" as defined by 5 U.S.C. 804(2).

List of Subjects in 40 CFR Part 180

Environmental protection, Administrative practice and procedure, Agricultural commodities, Pesticides and pests, Reporting and recordkeeping requirements.

Dated: April 19, 2010.

G. Jeffrey Herndon,

Acting Director, Registration Division, Office of Pesticide Programs.

■ Therefore, 40 CFR chapter I is amended as follows:

PART 180—[AMENDED]

■ 1. The authority citation for part 180 continues to read as follows:

Authority: 21 U.S.C. 321(q), 346a and 371.

■ 2. Section 180.475 is amended by revising paragraph (a)(1); revising (a)(2) introductory text; and removing and reserving paragraph (b).

§ 180.475 Difenoconazole; tolerances for residues.

(a) General. (1) Tolerances are established for residues of difenoconazole, including its metabolites and degradates, in or on the commodities in the following table. Compliance with the tolerance levels specified below is to be determined by measuring only difenoconazole, 1-[2-[2-chloro-4-(4-chlorophenoxy)phenyl]-4-methyl-1,3-dioxolan-2-ylmethyl]-1H-1,2,4-triazole, in or on the following raw agricultural commodities:

Commodity	Parts per million
Almond, hulls	7.0
Apple, wet pomace	4.5
Banana[1]	0.2
Barley, grain	0.1
Barley, hay	0.05
Barley, straw	0.05
Beet, sugar	0.3
Beet, sugar, dried pulp	1.9
Brassica, head and stem, subgroup 5A	1.9
Brassica, leafy green, subgroup 5B	35
Canola, seed	0.01
Citrus, dried pulp	2.0
Citrus, oil	25
Corn, sweet, forage	0.01
Corn, sweet, kernel plus cob with husks removed	0.01
Corn, sweet, stover	0.01
Cotton, gin byproducts	0.05
Cotton, undelinted seed	0.05
Fruit, citrus, group 10	0.60
Fruit, pome group 11	1.0
Grape	4.0
Grape, raisin	6.0
Nut, tree, group 14	0.03
Onion, bulb, subgroup 3-07A	0.20
Onion, green, subgroup 3-07B	6.0
Papaya[1]	0.30
Pistachio	0.03
Potato, processed waste	0.04
Rye, grain[1]	0.1
Vegetable, cucurbit, group 9	0.70

Commodity	Parts per million
Vegetable, fruiting, group 8	0.60
Vegetable, tuberous and corm, subgroup 1C	0.01
Wheat, forage	0.1
Wheat, grain	0.1
Wheat, straw	0.1

[1]There are no U.S. registrations.

(2) Tolerances are established for residues of difenoconazole, including its metabolites and degradates, in the commodities in the table below. Compliance with the tolerance levels specified below is to be determined by measuring difenoconazole, 1-[2-[2-chloro-4-(4-chlorophenoxy)phenyl]-4-methyl-1,3-dioxolan-2-ylmethyl]-1H-1,2,4-triazole, and its metabolite, CGA-205375, 1-[2-chloro-4-(4-chloro-phenoxy)phenyl]-2-[1,2,4]triazol-1-yl-ethanol, in the following commodities:

* * * * *

(b) *Section 18 emergency exemptions.* [Reserved]

* * * * *

[FR Doc. 2010–9759 Filed 4–27–10; 8:45 am]

BILLING CODE 6560–50–S

DEPARTMENT OF HOMELAND SECURITY

Federal Emergency Management Agency

44 CFR Part 64

[Docket ID FEMA–2010–0003; Internal Agency Docket No. FEMA–8115]

Suspension of Community Eligibility

Correction

In rule document 2010–2487 beginning on page 5890 in the issue of February 5, 2010 make the following corrections:

§64.6 [Corrected]

1. On page 5891, in §64.6, in the table, under the "Current effective map date" heading, in the first entry, "Apr. 17, 2010" should read "Feb. 17, 2010".

2. On the same page, in the same section, in the same table, under the "Date certain federal assistance no longer available in SFHAs" heading, in the first entry, "Apr. 17, 2010" should read "Feb. 17, 2010".

[FR Doc. C1–2010–2487 Filed 4–27–10; 8:45 am]

BILLING CODE 1505–01–D

FEDERAL COMMUNICATIONS COMMISSION

47 CFR Part 20

[WT Docket No. 05–265; FCC 10–59]

Reexamination of Roaming Obligations of Commercial Mobile Radio Service Providers

AGENCY: Federal Communications Commission.

ACTION: Final rule.

SUMMARY: In the Order on Reconsideration, the Commission modifies the automatic roaming obligation that the Commission adopted for voice and related services in 2007 by eliminating the home roaming exclusion.

DATES: Effective May 28, 2010.

FOR FURTHER INFORMATION CONTACT: For further information concerning this proceeding, please contact Peter Trachtenberg, Spectrum and Competition Policy Division at 202–418–7369, Christina Clearwater, Spectrum and Competition Policy Division at 202–418–1893 or Nese Guendelsberger, Spectrum and Competition Policy Division at 202–418–0634.

SUPPLEMENTARY INFORMATION: This is a summary of the Commission's rules noted in the Order on Reconsideration and Second Further Notice of Proposed Rulemaking in WT Docket No. 05–265; FCC 10–59, adopted April 21, 2010, and released on April 21, 2010. This summary should be read with its companion document, the Second Further Notice of Proposed Rulemaking (Second FNPRM) summary published elsewhere in this issue of the **Federal Register**. The full text of the Order on Reconsideration and Second Further Notice of Proposed Rulemaking is available for public inspection and copying during business hours in the FCC Reference Information Center, Portals II, 445 12th Street SW., Room CY–A257, Washington, DC 20554. It also may be purchased from the Commission's duplicating contractor at Portals II, 445 12th Street SW., Room CY–B402, Washington, DC 20554; the contractor's Web site, *http://www.bcpiweb.com;* or by calling (800) 378–3160, facsimile (202) 488–5563, or e-mail *FCC@BCPIWEB.com*. Copies of the public notice also may be obtained via the Commission's Electronic Comment Filing System (ECFS) by entering the docket number, WT Docket No. 05–265. Additionally, the complete item is available on the Federal Communications Commission's Web site at *http://www.fcc.gov*.

Synopsis of the Order on Reconsideration Section of the Order on Reconsideration and Second Further Notice of Proposed Rulemaking

I. Introduction

1. In this order, the Commission takes action to increase consumers' access to seamless nationwide mobile services, wherever and whenever they choose, and to promote investment, innovation, and competition in mobile wireless services. In the Order on Reconsideration, the Commission creates a framework for voice roaming that will encourage carriers of all sizes to reach reasonable commercial roaming agreements, while also encouraging these carriers to continue investing in the coverage and capacity of their networks. The Commission will adjudicate any disputes that may arise between carriers through a tailored, fact-based process. In the Second FNPRM, consistent with the recommendation of the National Broadband Plan, the Commission opens an examination of the critical issue of data roaming, by seeking comment on the rules that should apply to roaming for mobile data services such as mobile broadband service.

2. First, in the Order on Reconsideration, the Commission modifies the automatic roaming obligation that the Commission adopted for voice and related services in 2007 by eliminating the home roaming exclusion. With this decision, the Commission continues to strive to adopt policies that balance competing interests, including—promoting competition among multiple carriers; ensuring that consumers have access to seamless coverage nationwide; and providing incentives for all carriers to invest and innovate by using available

spectrum and constructing wireless network facilities on a widespread basis. Upon reconsideration, the Commission finds that an up-front, categorical exclusion of home roaming from the automatic roaming obligation does not strike the best balance in furthering these goals. As a result of the Commission's decision, home roaming will be subject to the automatic roaming requirement and, as a common carrier service, is subject to Sections 201 and 202 of the Act. The Commission will apply the same general presumption of reasonableness to requests for home roaming that the Commission applies to other requests for automatic roaming, and take into account the competing interests when addressing roaming disputes on a case-by-case basis. Specifically, the Commission establishes a general presumption that a request for automatic roaming is reasonable, in the first instance, if a requesting CMRS carrier's network is technologically compatible with the would-be host carrier's network, and the Commission will require a CMRS carrier receiving a reasonable request to provide automatic roaming on reasonable and not unreasonably discriminatory terms and conditions. The general presumption of reasonableness, however, is rebuttable, and parties may choose to bring roaming disputes to the Commission for resolution. The Commission will address such disputes on a case-by-case basis, taking into consideration the totality of the circumstances presented to determine whether requiring a roaming agreement would best further the Commission's public interest goals in such particular case.

3. Second, the Commission addresses in a Second FNPRM whether to extend roaming obligations to data services that are provided without interconnection to the public switched network—including mobile broadband services. Broadband deployment is a key priority for the Commission, and the deployment of mobile data networks will be essential to achieve the goal of making broadband connectivity available everywhere in the United States. The Commission also seeks to foster competition and the development of mobile data services with seamless and ubiquitous coverage. Ubiquitous coverage will enhance the unique social and economic benefits that a mobile service provides by enabling consumers to access information wherever they are, while competition will help to promote investment and innovation and protect consumer interests. The Commission seeks to develop a more detailed and updated record before the Commission makes a final determination regarding broadband data roaming. In 2007, the Commission sought comment on this issue in a five-paragraph *Further Notice.* In response, parties filed certain specific proposals regarding the rules, if any, that should govern roaming for mobile data services. Since that time, there have been numerous developments in the industry and advancements in technology that are likely to be relevant to the Commission's analysis, and that have affected at least one party's positions in this proceeding. To help us determine the right approach for mobile broadband roaming, the Commission wants to ensure that such developments are fully incorporated into the Commission's decision making on this important issue. Accordingly, the Commission seeks comment on the specific, concrete proposals offered in response to the 2007 Further Notice, as well as seeking additional proposals that parties may choose to offer response to the Second FNPRM. In addition, the Commission expands the scope of its proceeding by seeking comment on obligations governing the provision of roaming for such data services by providers that are not CMRS carriers as well as by providers that also provide CMRS services.

II. Order on Reconsideration

4. In this Order on Reconsideration, the Commission first eliminates the home roaming exclusion adopted in 2007. Instead, the Commission will treat requests for automatic roaming in home markets under the same framework as other requests for automatic roaming. Second, the Commission denies Sprint Nextel's request to reconsider the decision to extend automatic roaming obligations to push-to-talk. Finally, the Commission addresses the issues raised in SpectrumCo's petition for reconsideration in the Second FNPRM below.

A. Elimination of Home Roaming Exclusion

5. In this Order on Reconsideration, the Commission strives to adopt policies that balance competing interests of promoting competition, encouraging new entry, protecting consumers, and fostering investment. As discussed below, however, these goals are sometimes in tension. To best further these goals, the Commission eliminates the home roaming exclusion and generally presumes that a request for automatic roaming will be reasonable in the first instance if the requesting carrier's network is technologically compatible. This general presumption of reasonableness, however, is rebuttable. The Commission finds that such presumption of reasonableness will facilitate all roaming arrangements between carriers, including those for home roaming, ultimately benefiting consumers. Yet, in the event of a dispute, it also will allow the Commission to take into consideration the totality of the circumstances presented to determine whether requiring a roaming agreement would best further the Commission's public interest goals in such particular case.

6. Based on the record before us, the Commission concludes that it is in the public interest to modify its rules with respect to automatic roaming by eliminating the home roaming exclusion that the Commission previously applied to the automatic roaming requirement for voice and related services. Thus, the Commission will presume a request for automatic roaming to be reasonable, in the first instance, if the requesting carriers' network is technologically compatible, regardless of whether the request is for areas inside or outside of the requesting carrier's home market, and the Commission will require a CMRS carrier receiving a reasonable request to provide automatic roaming service to the requesting carrier on reasonable and not unreasonably-discriminatory terms and conditions. The Commission continues to support the goal of promoting facilities-based competition by providing incentives for carriers to construct wireless network facilities on the spectrum available to them. Upon reconsideration, however, the Commission concludes that the up-front categorical home roaming exclusion adopted by the *2007 Report and Order* would in many circumstances discourage, rather than encourage, the facilities-based competition it sought to promote. The Commission also remains mindful of the need in the roaming context to balance a number of competing interests, including—promoting competition (including facilities-based competition), encouraging new entry, protecting consumers, and fostering innovation and investment.

7. Although some parties have advocated that the Commission modify the home market exclusion in any of a number of ways, for example, by delaying its applicability for some period after a carrier obtains an initial spectrum license, the Commission decides that the better and simpler course is to eliminate the exclusion and address in particular cases the competing interests, including the concerns that motivated the adoption of the exclusion. Through the elimination

of the home roaming exclusion, the Commission seeks to encourage parties to negotiate roaming agreements—based on reasonable terms and conditions—that fill in gaps in their network coverage, including in areas where they hold spectrum rights. The Commission's expectation is that, with the revised rule adopted in this Order setting out an underlying obligation to provide automatic roaming, the Commission has laid the foundation to enable carriers to successfully negotiate reasonable roaming arrangements, including requests for home roaming.

8. The Commission stands ready, however, to the extent necessary, to resolve roaming disputes including whether a particular requesting carrier's request is reasonable, or whether a would-be host carrier has met its obligation to provide roaming on reasonable and not unreasonably discriminatory terms and conditions. This case-by-case analysis, through the dispute resolution process, will enable the Commission to take into consideration the particular circumstances of each dispute as they are relevant to the Commission's goals to determine whether a particular automatic roaming request, and the would-be host carrier's response, are reasonable.

9. Initially, the Commission finds that the home roaming exclusion, as adopted, failed to achieve its stated purposes in a number of respects. In adopting the home roaming exclusion, the Commission sought to promote facilities-based competition by preserving appropriate incentives for carriers to construct facilities in areas where they have spectrum holdings. The record highlights, however, that in certain circumstances the exclusion can hinder the development of such competition and create disincentives to construct. In particular, the home roaming exclusion as adopted unintentionally created confusion as to roaming rights and led some to conclude that a carrier effectively has no right to request roaming in any market where it held spectrum, and the would-be host carrier has no obligation to negotiate roaming arrangements. This would be the case even when that spectrum is newly licensed and the carrier seeking roaming thus has never had any opportunity to build any facilities in any part of the licensed spectrum. The Commission finds that the home roaming exclusion as adopted can in effect require carriers entering new markets to build out their networks extensively throughout the newly obtained license area before they can provide a competitive service to consumers, all without the benefit of financing the construction of new networks over time with revenues from existing services and reliance on roaming to fill in gaps during build out. With "home market" defined under the exclusion on the basis of an entire license area (*e.g.,* CMA, BTA, EA, REAG), this buildout burden can be significant, and potentially can even cover several States (*e.g.,* if licensed on an REAG basis). In such circumstances, the Commission finds that the exclusion can delay or deter entry into a market because a carrier seeking to provide service in a new geographic area, without the ability to supplement its networks with roaming and whose initial facilities would necessarily be limited, would be required to compete with incumbents that had been developing and expanding their networks for many years. The Commission has previously recognized that this "head-start" advantage can constitute a significant hurdle to new competition.

10. In addition, although the exclusion was intended to incentivize carriers to use their spectrum holdings through additional buildout, it deprives them of roaming rights even in circumstances where their spectrum is not available or usable for reasons beyond their control. For example, a carrier's AWS–1 spectrum holding might be unavailable because of the unfinished relocation of U.S. Government incumbent users from that band. In other instances, an area may be subject to legal constraints that permit only one carrier to offer service (*e.g.,* in certain subway systems or government lands), notwithstanding the nominal coverage of the area by a license held by another carrier.

11. Another reason for eliminating the home roaming exclusion is that it does not adequately account for the fact that building another network may be economically infeasible or unrealistic in some geographic portions of licensed service areas. The Commission finds that, in some areas of the country with very low population densities, it is simply uneconomic for several carriers to build out. Further, the Commission notes that it may be significantly more costly to build out when the carrier only has access to higher spectrum frequencies where propagation characteristics are less advantageous. Indeed, every carrier, including every nationwide carrier holding licenses that cover the entire country, relies on roaming to some extent to fill in gaps in its network coverage. In particular, the record reflects that for many CMRS carriers, there are areas within their licensed service areas where there is insufficient demand to support construction in those areas by another carrier.

12. To address these issues, some parties propose that the Commission retain some modified form of the home roaming exclusion. These proposals vary significantly in terms of the timing and scope of implementation, and whether in particular instances there should be exceptions to the exclusion. For instance, many suggest that implementation of the home roaming exclusion be delayed for some period following the effective date of the order. Some advocate that the exclusion take effect in a particular location only after a period of time following the availability of spectrum to a new licensee—which may occur with the initial issuance of a license by the Commission or only after the license is no longer encumbered for reasons beyond the requesting carrier's control. The particular suggestions for the limited period of time range widely, between one year and seven years. Other suggestions include the possibility that the exclusion not apply for an additional time period if a requesting carrier meets Commission-specified build-out benchmarks on a population or geographic coverage basis within specific time periods. As another alternative, some suggest that, after an initial transition period during which home roaming would be provided, the home roaming exclusion would apply where the would-be host carrier affirmatively establishes that the requesting carrier has failed to make progress in building out.

13. The Commission concludes that the better, simpler approach is to eliminate the home roaming exclusion. The Commission finds the reasonableness of a roaming request in many instances will likely depend on the individual circumstances of a particular request. For instance, the Commission recognizes the difficulties in determining accurately whether a carrier has avoided facilities-based entry in a high cost area because it is prohibitively difficult or merely less profitable than urban areas. This difficulty, however, and the intensively fact-based nature of the issue, weighs in favor of a case-by-case, fact-driven approach that the Commission is adopting for resolving disputes over roaming arrangements. The Commission discusses below the various factors that will guide the resolution of any disputes brought before it.

14. The Commission also notes that, in the *2007 Report and Order,* the Commission continued to encourage all

CMRS carriers to negotiate reasonable roaming agreements. It specifically contemplated that, even with the home roaming exclusion, CMRS carriers would continue voluntarily to negotiate automatic roaming agreements that included home roaming. The record supports the conclusion that the Commission's home roaming exclusion is hampering CMRS carriers' abilities to negotiate automatic roaming agreements for home roaming or obtain renewal of existing automatic roaming agreements that included home roaming, and will likely have a growing impact in the future. The Commission finds that the home roaming exclusion unintentionally changed the status quo with regard to carriers' previously existing practices in negotiating roaming agreements and may have disrupted settled expectations of competitive carriers on which they formed long-term business models.

15. In particular, the Commission rejects the arguments of AT&T and Verizon Wireless that carriers cannot claim any harm in the home roaming exclusion because it merely maintains a status quo under which they have never had any rights to home roaming. Although, prior to the *2007 Report and Order,* the Commission had not expressly provided that there was a home roaming obligation under Sections 201 and 202, nor adopted any rules requiring the provision of such services, it had stated on several occasions that carriers that were unreasonably denied automatic roaming could seek relief under Section 201. For example, when addressing in its 2000 Notice of Proposed Rulemaking whether to adopt an automatic roaming requirement, the Commission began by affirming that "roaming is a common carrier service * * * and thus * * * the provision of roaming is subject to the requirements of Section 201(b), 202(a), and 332(c)(1)(B) of the Communications Act." It then sought comment on, among other things, whether "the avenues of complaint and redress afforded by Section 208 provide sufficient and appropriate means of ensuring the development of automatic roaming services in a competitive CMRS market." Similarly, in the *2005 Roaming Reexamination NPRM,* the Commission began a further consideration of whether to adopt an explicit automatic roaming requirement by stating that "complaints and enforcement actions involving unjust and unreasonable charges, practices, or discriminatory conduct by CMRS carriers in the provision of roaming services are covered by the complaint process set forth in Title II of the Act." During this period, the Commission also indicated in transactions-related orders that automatic roaming was subject to the statutory obligations under Section 208.

16. In referring to existing carrier obligations under Section 201 and 202, the Commission generally did not distinguish between home roaming and automatic roaming. Further, during this period, automatic roaming arrangements were being negotiated among carriers, with no specific indication that home roaming agreements were particularly problematic. Thus, the Commission finds that the clarifications in the *2007 Report and Order* did alter the legal status quo against which automatic roaming arrangements were being negotiated, and that the adoption of an automatic roaming obligation with a home roaming exclusion appears to have significantly reduced the incentive to make home roaming available, and will lead to a reduction in the availability of home roaming arrangements over time. Indeed, as discussed earlier, the record supports the conclusion that the Commission's home roaming exclusion is hampering CMRS carriers' abilities to negotiate automatic roaming agreements that include home roaming.

17. Other factors may be contributing to a declining availability of roaming arrangements in home markets, which further supports the Commission's action here. For one, since the Commission's adoption of the home roaming exclusion, there have been a number of significant mergers consummated in the last two and a half years. MetroPCS states that, with the consolidation in the industry, the number of roaming partners is diminishing, making it less likely that leaving negotiations involving home roaming strictly to the market without any underlying regulatory obligations, will result in fewer such roaming agreements. Additionally, T-Mobile provides an expert report with an economic analysis of roaming that recommends the elimination of the home roaming exclusion in light of the significant changes in the wireless industry since the *2007 Report and Order* was released. AT&T points out that, with respect to each wireless transaction approved since 2007, the Commission has concluded that the transaction, with or without conditions, served the public interest and argues that the transactions have yielded significant consumer benefits in that AT&T brings to the customers of the acquired carrier access to the same wireless services and products, such as next-generation networks and innovative voice and data plans, that are available to customers in the most densely populated areas. While the Commission has approved these transactions, with conditions, as not resulting in any transaction-specific competitive harm, those orders have recognized the legitimacy of addressing roaming issues in a rulemaking context and the Commission finds that broad industry trends should be considered in evaluating the availability of reasonable home roaming arrangements. The Commission finds that, in some areas, the consolidation in the wireless industry may have reduced the number of available roaming partners for some of the smaller, regional and rural carriers. This trend thus may have contributed to reductions in the availability of voluntary and reasonable roaming arrangements, including arrangements for home roaming. Regardless of the factors behind the apparent decline in the availability of such roaming arrangements, the Commission finds further grounds to reconsider an upfront, categorical home roaming exclusion that can serve as a bar to negotiation of reasonable arrangements.

18. The Commission rejects contentions by AT&T and Verizon Wireless that the Commission needs to retain the home roaming exclusion so as not to undermine facilities-based service or discourage competition based on coverage and service quality. According to AT&T, the home roaming exclusion has positive effects on competition and there is no justification for allowing a company to take advantage of its competitor's investment in network infrastructure and superior in-market coverage. Verizon Wireless similarly argues the home roaming exclusion should be retained because it encourages build-out in high cost areas and serves the public interest by allowing carriers that have made the investment to construct facilities in high cost areas to differentiate themselves on the basis of superior coverage. Verizon Wireless also states that repealing the home roaming exclusion would undermine the pro-competitive benefits that flow from carriers differentiating themselves on the basis of superior coverage in the home market, and would also undermine the requesting carriers' incentive to build network facilities to improve coverage in their licensed areas.

19. The Commission agrees that there are pro-competitive benefits that flow from carriers differentiating themselves on the basis of coverage in their licensed service areas, including in rural and remote areas. However, the Commission

is not persuaded that replacing the current categorical home roaming exclusion with a case-by-case assessment of reasonableness, based on the reasonableness of a particular roaming request, will undermine these pro-competitive benefits. The Commission seeks here to balance various factors, which, in addition to fostering investment, include promoting competition, encouraging new entrants, and protecting the interests of consumers. The Commission also considers that outcomes can have both positive and negative effects on the build-out incentives of both requesting and host carriers, and these considerations must also be weighed. In balancing these effects and factors, the Commission finds that adopting an approach that includes a general presumption of reasonableness with respect to automatic roaming, combined with a case-by-case determination of reasonableness in the event of a dispute, better preserves incentives to enter and incentives to invest overall, and at the same time protects consumers by facilitating their access to ubiquitous service.

20. AT&T argues that, if the first carrier providing coverage in a given area were required to provide automatic home roaming service to its competitors' customers, there would be no reason for competitors to build out their own networks in that area. The Commission disagrees. Carriers deploying next generation networks will still have incentives to build out to ensure that their subscribers receive all of the benefits of the carriers' own advanced networks. The Commission finds that, as a practical matter, the relatively high price of roaming compared to providing facilities-based service will often be sufficient to counterbalance the incentive to "piggy back" on another carrier's network. Further, the Commission emphasizes that host carriers have flexibility, subject to a standard of reasonableness, to establish the structure and the level of roaming rates, and that, as described below, the fact that a requesting carrier holds spectrum, or is offering service on its own facilities, in an area are among the factors the Commission may consider in addressing disputes. Accordingly, the impact of a roaming obligation on buildout incentives does not warrant a general exclusion, but should be considered as a factor on a case-by-case basis in the event of a dispute.

21. The Commission rejects as well AT&T's argument that there is no evidence to suggest that home roaming is necessary to eliminate the "head start" advantage of larger carriers. As discussed above, the Commission finds that the record amply supports a finding that in the absence of roaming arrangements, such an advantage will deter investment and constitute a significant hurdle to competition.

22. AT&T also argues that no regulatory intervention is necessary because there is competition in the retail market and no harm to consumers. The Commission notes that in the *2007 Report and Order,* the Commission already rejected this argument when it found that automatic roaming is a common carrier service and adopted the automatic roaming rule, concluding that "[g]iven the current CMRS market situation and wireless customer expectations, []it is in the public interest to facilitate reasonable roaming requests by carriers on behalf of wireless customers." As noted in the *2007 Report and Order,* consumers increasingly rely on mobile services, they reasonably expect to continue their wireless communications wherever they are, and automatic roaming benefits them by promoting seamless CMRS service around the country. In this order, the Commission merely places requests for home roaming under the same framework as other requests for roaming services. As discussed above, the Commission's decision here will protect consumers, promote competition, ensure that consumers have access to seamless coverage nationwide, and provide incentives for all carriers to invest and innovate by using available spectrum and constructing wireless network facilities on a widespread basis.

23. The Commission also disagrees with AT&T's contention that elimination of the home roaming exclusion would create *de facto* mandatory resale obligations. The automatic roaming obligation imposed in the *2007 Roaming Order* under Sections 201 and 202, and that the Commission expands here with the elimination of the home roaming exclusion, is not intended to resurrect CMRS resale obligations. The Commission's mandatory resale rule was sunset in 2002, and, as the Commission previously stated, the automatic roaming obligations cannot be used as a backdoor way to create *de facto* mandatory resale or virtual reseller networks. The Commission finds that its actions herein in eliminating the home roaming exclusion will not effectively change the Commission's policy on CMRS resale obligations. While resale obligations are intended to offer carriers the opportunity to market a competitive retail service without facilities development, such a resale product would not serve the Commission's goals of promoting facilities-based competition, the development of spectrum resources, and the availability of ubiquitous coverage.

24. *Addressing disputes.* To the extent there is a disagreement between CMRS carriers regarding automatic roaming requests, including requests for home roaming rights, carriers may seek a determination from the Commission as to whether the parties have met their obligations with regard to automatic roaming. The Commission reaffirms here its intent to address such roaming disputes expeditiously. Whether or not the appropriate procedural vehicle is a complaint under Section 208 of the Act or a petition for declaratory ruling under Section 1.2 of the Commission's rules may vary depending on the circumstances of each case. If a dispute arises regarding automatic roaming obligations, parties are encouraged to contact Commission staff for procedural guidance and for negotiations using the Commission's informal dispute resolution processes. Below, the Commission provides some clarification as to how such disputes will be addressed.

25. The Commission first emphasizes that CMRS carriers' statutory obligations regarding automatic roaming are not framed in absolute terms. Under Sections 332(c)(1)(B), 201 and 202, the request to obtain automatic roaming must be "reasonable." Furthermore, Section 201(b) requires carriers' practices relating to their provision of automatic roaming to be "reasonable" and Section 202(a) prohibits "unjust and unreasonable" discrimination. Thus, in each instance, the statutory obligation is qualified by a "reasonableness" standard. The Commission has broad discretion in interpreting these statutory obligations and the application of the "reasonableness" standard to a particular context. As discussed below, in resolving roaming disputes, the Commission will assess whether a request is reasonable and whether the host carrier's response to the request is reasonable and not unreasonably discriminatory based on the totality of the circumstances of a particular case.

26. In resolving disputes, the Commission will presume, in the first instance, that a request for automatic roaming of covered services by a technologically compatible carrier is reasonable under Sections 332(c), 201 and 202, regardless of whether the request includes areas where the requesting carrier holds spectrum rights. When a presumptively reasonable automatic roaming request is made, a would-be host CMRS carrier has a duty to respond promptly to the request and

avoid actions that unduly delay or stonewall the course of negotiations regarding that request. For example, following receipt of a presumptively reasonable automatic roaming request, evidence of a would-be host carrier's refusal to respond at all or a persistent pattern of stonewalling behavior will likely support a finding of a breach of the would-be host carrier's automatic roaming obligations.

27. As discussed above, the Commission seeks to encourage parties to negotiate roaming agreements based on reasonable terms and conditions. In case of a dispute, the Commission's consideration begins with the presumption that a request by a technologically compatible carrier for automatic roaming is reasonable. This presumption of reasonableness, however, is rebuttable, and host carriers may seek to demonstrate, under their particular circumstances, that the general presumption of reasonableness with respect to the provision of automatic roaming requests meeting the conditions specified above should not apply. Below, the Commission provides additional guidance on factors the Commission may consider when resolving such roaming disputes that are brought before it—specifically in determining whether a request is reasonable and whether the host carrier's response to the request is reasonable and not unreasonably discriminatory. Each case will be decided based on the totality of the circumstances, such that no particular factor will be dispositive. With that in mind, the Commission clarifies that it may consider the following factors, as well as others, when considering whether requiring roaming in the circumstances at issue would best further the Commission's public interest goals:

- The terms and conditions of the proposed roaming agreement;
- The level of competitive harm in a given market and the benefits to consumers;
- The extent and nature of the requesting carrier's build-out in the areas where it holds spectrum rights and has requested automatic roaming, the length of time the requesting carrier has held such spectrum rights, whether such spectrum is encumbered, and if not, how long it has been unencumbered;
- Significant economic factors, such as whether building another network in the geographic area may be economically infeasible or unrealistic, and the impact of any "head-start" advantages;
- Whether the requesting carrier is seeking roaming for an area where it is already providing facilities-based service;
- The impact of granting the request on the incentives for either carrier to invest in new facilities and coverage, new services, and service quality;
- Whether the carriers involved have had previous roaming arrangements with similar terms;
- Whether alternative roaming partners are available;
- Events or circumstances beyond either carrier's control that impact either the provision of automatic roaming or the need for roaming in the proposed area(s) of coverage;
- The propagation characteristics of the spectrum licensed to the requesting and would-be host carriers, including circumstances where the requesting carrier's spectrum rights in an area are limited to higher spectrum frequencies where propagation characteristics are less advantageous than a host carrier's licensed spectrum;
- Other special or extenuating circumstances.

28. The Commission notes again that these factors are not exclusive or exhaustive. Carriers may argue that the Commission should consider other relevant factors in determining whether a request is reasonable or a host carrier's position is unreasonable or unreasonably discriminatory under Sections 201 and 202 of the Act. In addition, to better promote reasonable negotiations on both sides of a request, the Commission clarifies that, in determining whether a carrier will be found liable for a violation of its obligations under Sections 201 and 202, the Commission will also consider whether its position had a reasonable basis, taking into account all relevant precedents and decisions by the Commission.

B. Push-to-Talk

29. Based on the record, the Commission finds Sprint Nextel has failed to demonstrate sufficient grounds for revisiting the determination that carriers must provide roaming for push-to-talk services upon reasonable request. Accordingly, the Commission denies Sprint Nextel's Petition for Reconsideration.

30. Having reviewed the arguments of all parties and the relevant record evidence, the Commission finds Sprint Nextel has failed to demonstrate sufficient grounds for revisiting the determination that carriers must provide push-to-talk roaming upon reasonable request.

31. First, the Commission disagrees with Sprint-Nextel that the Commission's findings on push-to-talk service were unsupported by record evidence. Contrary to Sprint-Nextel's assertion, the record provides substantial evidence for the Commission's finding that push-to-talk is provided both as an interconnected service or feature and as a non-interconnected service or feature, depending on the technology and network configuration that is chosen by the carrier. Consumers do not generally differentiate between push-to-talk that is interconnected and push-to-talk that is not interconnected, but form their expectations of seamless connectivity based on the way that push-to-talk service is provided on their cell phones and in their calling plans. As the Commission noted in the *2007 Report and Order,* the Commission finds it in the public interest to protect and promote consumer expectations of seamless connectivity by extending automatic roaming obligations to push-to-talk. In that regard, the conclusion that consumers generally regard push-to-talk services as a feature on their handset, provided along with other CMRS services, is supported by the *Eleventh Competition Report,* as well as by other publicly available information about the state of the push-to-talk market and by commenters. The Commission likewise finds substantial evidence that push-to-talk is typically not offered as a stand-alone voice service, but is offered solely in conjunction with the activation of basic voice service that is an interconnected service. The Commission finds it likely consumers consider push-to-talk as a feature on their handsets that provides a different type of voice functionality that complements their basic voice service. Sprint Nextel has not provided any factual evidence to demonstrate that this analysis is incorrect.

32. The Commission also is not persuaded by Sprint Nextel's other arguments. Sprint Nextel disputes whether push-to-talk is in fact an "adjunct" to basic voice service as that term is used in the Commission's regulatory scheme. The analysis in the *2007 Report and Order,* however, did not reference the particular regulatory construct cited by Sprint Nextel. Rather, as discussed above, the Commission used the term in a more general sense to describe the expectations of consumers based on their perception of push-to-talk services as provided in the marketplace. As the Commission stated: "[w]e are also aware that *consumers consider* push-to-talk and SMS as

features that are typically offered as adjuncts to basic voice services, and expect the same seamless connectivity with respect to these features and capabilities as they travel outside their home network service areas (emphasis added)." The Commission notes that "safeguard[ing] wireless consumers' reasonable expectations of receiving seamless nationwide commercial mobile telephony services through roaming" is one of the goals that the Commission considered in establishing the parameters of the automatic roaming obligation. Further, considering these factors taken together with the significant market presence of interconnected push-to-talk, which provides the same service functionality and will indisputably be subject to automatic roaming requirements, the Commission again finds it in the public interest that CMRS providers of push-to-talk voice services should be subject to the same automatic roaming obligations regardless of the technology or network configuration through which such services are provided.

33. Sprint Nextel's argument that this decision improperly adjudicates its dispute with SouthernLINC is also without merit. Specifically, the Commission declared its intention to proceed through rulemaking in two prior merger proceedings in which Sprint Nextel was a party. Moreover, push-to-talk is not a service unique to Sprint Nextel. Other nationwide carriers are providing push-to-talk, and all push-to-talk features and capabilities are covered in the *2007 Report and Order* regardless of whether the underlying network is iDEN, CDMA, or GSM. In determining whether extending roaming obligations to push-to-talk would serve the public interest, the Commission examined, among other things, the record evidence concerning Sprint Nextel's actions regarding push-to-talk roaming. SouthernLINC and other small iDEN carriers presented evidence that certain customers were unable to obtain seamless push-to-talk connectivity when outside their home market areas in the absence of a roaming agreement with Sprint Nextel. That evidence is a relevant part of the overall record respecting "current market conditions" and "developments in technology" the Commission considered in making its determination whether push-to-talk services should be included in the roaming obligations imposed by the order.

34. Finally, the Commission disagrees that extending automatic roaming obligations to push-to-talk will eliminate push-to-talk geographic coverage as a market differentiator. As discussed above, the scope of a requesting carrier's buildout is one factor the Commission will consider in adjudicating disputes regarding the provision of automatic roaming. In summary, Sprint Nextel has presented no persuasive legal argument or factual evidence to demonstrate that the Commission erred in concluding that the imposition of a push-to-talk roaming obligation serves the public interest. The Commission therefore denies Sprint Nextel's petition for reconsideration with respect to push-to-talk roaming.

III. Procedural Matters

A. Final Regulatory Flexibility Analysis

35. As required by the Regulatory Flexibility Act of 1980 ("RFA"), the Commission has prepared a Final Regulatory Flexibility Analysis ("FRFA") relating to the *Order on Reconsideration.* The FRFA is set forth below.

Final Regulatory Flexibility Analysis

36. As required by the Regulatory Flexibility Act of 1980, as amended (RFA), an Initial Regulatory Flexibility Analysis (IRFA) was incorporated in the *Memorandum Opinion & Order and Notice of Proposed Rulemaking* in WT Docket No. 05–265. The Commission sought written public comment on the proposals in that Order and Notice, including comment on the IRFA. A Final Regulatory Flexibility Analysis was adopted in conjunction with the Commission's *Report and Order and Further Notice of Proposed Rulemaking* in WT Docket No. 05–265. The present Final Regulatory Flexibility Analysis (FRFA) conforms to the RFA.

A. Need for, and Objectives of, the Order on Reconsideration

37. In the *2007 Report and Order,* the Commission clarified that automatic roaming is a common carrier obligation for commercial mobile radio service (CMRS carriers), subject to Sections 201 and 202 of the Communications Act, and required CMRS carriers to provide automatic roaming services to other carriers upon reasonable request on a just, reasonable, and non-discriminatory basis. In particular, the Commission determined that, when a reasonable request for automatic roaming is made by a technologically compatible CMRS carrier (requesting carrier), a host CMRS carrier has the obligation under Sections 332(c)(1)(B) and 201(a) to provide automatic roaming on a just, reasonable, and non-discriminatory basis to the requesting carrier outside of the requesting carrier's home market. The Commission defined the home market as any geographic location where the requesting carrier has a wireless license or spectrum usage rights that could be used to provide CMRS. In excluding home roaming, the Commission found that imposing an automatic roaming obligation in home markets where the requesting carrier already has the spectrum to compete directly with the would-be host carrier would not serve the public interest. In reaching this decision, the Commission found "requiring home roaming could harm facilities-based competition and negatively affect build-out in these markets, thus adversely impacting network quality, reliability and coverage." The Commission also, however, recognized the importance of home roaming and encouraged all CMRS carriers to negotiate automatic roaming in home markets, stating that its decision should not be construed as prohibiting a requesting carrier from seeking to negotiate home roaming agreements. In addition, the Commission found that the scope of the automatic roaming obligation under sections 201 and 202 includes only services offered by CMRS carriers that are real-time, two-way switched voice or data services that are interconnected with the public switched network and utilize an in-network switching facility that enables providers to reuse frequencies and accomplish seamless hand-offs of subscriber calls. The Commission also found, based on several factors, that it would serve the public interest to extend the scope of the automatic roaming obligation to push-to-talk and SMS, but declined to adopt a rule extending the automatic roaming obligation to include non-interconnected services, such as wireless broadband Internet access services.

38. In response to the *2007 Report and Order,* the Commission received five petitions for reconsideration, four oppositions to the petitions for reconsideration, five replies to the oppositions, and three comments in support of the petitions for reconsideration. In the petitions for reconsideration, the petitioners request that the Commission reconsider the determination relating to the home roaming exclusion. Specifically, petitioners ask the Commission to reconsider its ruling that host carriers are not required to provide automatic roaming in any areas where the requesting carrier holds a wireless license or leases spectrum, and to eliminate the home roaming exclusion. All five petitioners challenge the Commission's policy rationale for

adopting the home roaming exclusion. The petitioners are primarily concerned with obtaining automatic roaming services for their home markets from a would-be host CMRS carrier, and are also concerned that newly acquired AWS–1 and 700 MHz spectrum may be encumbered, and therefore not capable of being used. With regard to AWS–1 and 700 MHz spectrum, petitioners argue that it should not be considered part of their "home market" for purposes of application of the home roaming exclusion. Sprint Nextel also requests that the Commission reconsider the decision to extend automatic roaming obligations to push-to-talk (PTT). In addition, SpectrumCo asks the Commission to reconsider its decision to limit the automatic roaming obligation only to services that use the public switched network.

39. In the *Order on Reconsideration,* the Commission eliminates the home roaming exclusion adopted in 2007. Instead, the Commission will treat requests for automatic roaming in home markets under the same framework as other requests for automatic roaming. Thus, the Commission will generally presume that such a request is reasonable in the first instance if the requesting CMRS carrier's network is technologically compatible with the would-be host carrier's network, and the Commission will require that a CMRS carrier receiving a reasonable request to provide automatic roaming to the requesting carrier on reasonable and not unreasonably discriminatory terms and conditions. This presumption of reasonableness is rebuttable, and parties may choose to bring roaming disputes to the Commission for resolution. With respect to Sprint Nextel's request that the Commission reconsider its decision to extend automatic roaming obligations to push-to-talk, the Commission denies the request and finds that Sprint Nextel has failed to demonstrate sufficient grounds for revisiting the determination. The Commission addresses the issues raised in SpectrumCo's petition for reconsideration in the *Second FNPRM.*

B. Summary of Significant Issues Raised by Public Comments in Response to the IRFA or FRFA

40. The Commission received no filings directly in response to the previous IRFA or FRFA.

C. Description and Estimate of the Number of Small Entities To Which the Order on Reconsideration Will Apply

41. The RFA directs the Commission to provide a description of, and, where feasible, an estimate of, the number of small entities that may be affected by the rules adopted herein. The RFA generally defines the term "small entity" as having the same meaning as the terms "small business," "small organization," and "small governmental jurisdiction." In addition, the term "small business" has the same meaning as the term "small business concern" under the Small Business Act. A "small business concern" is one which: (1) Is independently owned and operated; (2) is not dominant in its field of operation; and (3) satisfies any additional criteria established by the Small Business Administration (SBA).

42. The Commission has included small incumbent local exchange carriers in this present RFA analysis. As noted above, a "small business" under the RFA is one that, *inter alia,* meets the pertinent small business size standard (*e.g.,* a telephone communications business having 1,500 or fewer employees), and "is not dominant in its field of operation." The SBA's Office of Advocacy contends that, for RFA purposes, small incumbent local exchange carriers are not dominant in their field of operation because any such dominance is not "national" in scope. The Commission has therefore included small incumbent local exchange carriers in this RFA analysis, although the Commission emphasizes that this RFA action has no effect on Commission analyses and determinations in other, non-RFA contexts.

43. Nationwide, there are a total of approximately 29.6 million small businesses, according to the SBA. A "small organization" is generally "any not-for-profit enterprise which is independently owned and operated and is not dominant in its field." Nationwide, as of 2002, there were approximately 1.6 million small organizations. The term "small governmental jurisdiction" is defined generally as "governments of cities, towns, townships, villages, school districts, or special districts, with a population of less than fifty thousand." Census Bureau data for 2002 indicate that there were 87,525 local governmental jurisdictions in the United States. The Commission estimates that, of this total, 84,377 entities were "small governmental jurisdictions." Thus, the Commission estimates that most governmental jurisdictions are small. Nationwide, there are a total of approximately 29.6 million small businesses, according to the SBA.

44. *Wireless Service Providers.* The SBA has developed a small business size standard for wireless firms within the new economic census category of "Wireless Telecommunications Carriers (except satellite)." Under this new category, the SBA deems a wireless business to be small if it has 1,500 or fewer employees. The data the Commission presents on the number of small entities is based on the information gathered in conjunction with the prior two broad economic census categories of "Paging" and "Cellular and Other Wireless Telecommunications"—both of the small business size standards in effect prior to the adoption of the new size standard by the SBA in 2008. Since no new data has been acquired since the adoption of the new size standard, the Commission provides the only data it has which is based on data collected before the new size standard went into effect. For the census category of Paging, Census Bureau data for 2002 show that there were 807 firms in this category that operated for the entire year. Of this total, 804 firms had employment of 999 or fewer employees, and three firms had employment of 1,000 employees or more. Thus, under this category and associated small business size standard, the majority of firms can be considered small. For the census category of Cellular and Other Wireless Telecommunications, Census Bureau data for 2002 show that there were 1,397 firms in this category that operated for the entire year. Of this total, 1,378 firms had employment of 999 or fewer employees, and 19 firms had employment of 1,000 employees or more. Thus, under this second category and size standard, the majority of firms can, again, be considered small.

45. *Wireless Communications Services.* This service can be used for fixed, mobile, radiolocation, and digital audio broadcasting satellite uses in the 2305–2320 MHz and 2345–2360 MHz bands. The Commission defined "small business" for the wireless communications services (WCS) auction as an entity with average gross revenues of $40 million for each of the three preceding years, and a "very small business" as an entity with average gross revenues of $15 million for each of the three preceding years. The SBA has approved these definitions. The Commission auctioned geographic area licenses in the WCS service. In the auction, which commenced on April 15, 1997 and closed on April 25, 1997, there were seven bidders that won 31 licenses that qualified as very small business entities, and one bidder that won one license that qualified as a small business entity.

46. *700 MHz Guard Bands Licenses.* In the *700 MHz Guard Bands Order,* the Commission adopted size standards for "small businesses" and "very small

businesses" for purposes of determining their eligibility for special provisions such as bidding credits and installment payments. A small business in this service is an entity that, together with its affiliates and controlling principals, has average gross revenues not exceeding $40 million for the preceding three years. Additionally, a "very small business" is an entity that, together with its affiliates and controlling principals, has average gross revenues that are not more than $15 million for the preceding three years. SBA approval of these definitions is not required. In 2000, the Commission conducted an auction of 52 Major Economic Area ("MEA") licenses. Of the 104 licenses auctioned, 96 licenses were sold to nine bidders. Five of these bidders were small businesses that won a total of 26 licenses. A second auction of 700 MHz Guard Band licenses commenced and closed in 2001. All eight of the licenses auctioned were sold to three bidders. One of these bidders was a small business that won a total of two licenses.

47. *700 MHz Band Commercial Licenses.* There is 80 megahertz of non-Guard Band spectrum in the 700 MHz Band that is designated for commercial use: 698–757, 758–763, 776–787, and 788–793 MHz Bands. With one exception, the Commission adopted criteria for defining two groups of small businesses for purposes of determining their eligibility for bidding credits at auction. These two categories are: (1) "Small business," which is defined as an entity that has attributed average annual gross revenues that do not exceed $40 million during the preceding three years; and (2) "very small business," which is defined as an entity with attributed average annual gross revenues that do not exceed $15 million for the preceding three years. In Block C of the Lower 700 MHz Band (710–716 MHz and 740–746 MHz), which was licensed on the basis of 734 Cellular Market Areas, the Commission adopted a third criterion for determining eligibility for bidding credits: An "entrepreneur," which is defined as an entity that, together with its affiliates and controlling principals, has average gross revenues that are not more than $3 million for the preceding three years. The SBA has approved these small size standards.

48. An auction of 740 licenses for Blocks C (710–716 MHz and 740–746 MHz) and D (716–722 MHz) of the Lower 700 MHz Band commenced on August 27, 2002, and closed on September 18, 2002. Of the 740 licenses available for auction, 484 licenses were sold to 102 winning bidders. Seventy-two of the winning bidders claimed small business, very small business, or entrepreneur status and won a total of 329 licenses. A second auction commenced on May 28, 2003, and closed on June 13, 2003, and included 256 licenses: Five EAG licenses and 251 CMA licenses. Seventeen winning bidders claimed small or very small business status and won 60 licenses, and nine winning bidders claimed entrepreneur status and won 154 licenses.

49. The auction for the remaining 62 megahertz of commercial spectrum began on January 24, 2008. A total of 214 applicants were found to be qualified bidders, of which 38 applicants claimed status as small businesses and 81 applicants claimed status as very small businesses. The auction concluded on March 18, 2008 with 101 bidders winning 1090 licenses. The provisionally winning bids for the A, B, C, and E Block licenses exceeded the aggregate reserve prices for those blocks. The provisionally winning bid for the D Block license, however, did not meet the applicable reserve price and, thus, did not become a winning bid.

50. *Government Transfer Bands.* The Commission adopted small business size standards for the unpaired 1390–1392 MHz, 1670–1675 MHz, and the paired 1392–1395 MHz and 1432–1435 MHz bands. Specifically, with respect to these bands, the Commission defined an entity with average annual gross revenues for the three preceding years not exceeding $40 million as a "small business," and an entity with average annual gross revenues for the three preceding years not exceeding $15 million as a "very small business." SBA has approved these small business size standards for the aforementioned bands. Correspondingly, the Commission adopted a bidding credit of 15 percent for "small businesses" and a bidding credit of 25 percent for "very small businesses." This bidding credit structure was found to have been consistent with the Commission's schedule of bidding credits, which may be found at Section 1.2110(f)(2) of the Commission's rules. The Commission found that these two definitions will provide a variety of businesses seeking to provide a variety of services with opportunities to participate in the auction of licenses for this spectrum and will afford such licensees, who may have varying capital costs, substantial flexibility for the provision of services. The Commission noted that it had long recognized that bidding preferences for qualifying bidders provide such bidders with an opportunity to compete successfully against large, well-financed entities. The Commission also noted that it had found that the use of tiered or graduated small business definitions is useful in furthering its mandate under Section 309(j) to promote opportunities for and disseminate licenses to a wide variety of applicants. An auction for one license in the 1670–1674 MHz band commenced on April 30, 2003 and closed the same day. One license was awarded.

51. *Advanced Wireless Services.* In 2008, the Commission conducted the auction of Advanced Wireless Services ("AWS") licenses. This auction, which as designated as Auction 78, offered 35 licenses in the AWS 1710–1755 MHz and 2110–2155 MHz bands ("AWS–1"). The AWS–1 licenses were licenses for which there were no winning bids in Auction 66. That same year, the Commission completed Auction 78. A bidder with attributed average annual gross revenues that exceeded $15 million and did not exceed $40 million for the preceding three years ("small business") received a 15 percent discount on its winning bid. A bidder with attributed average annual gross revenues that did not exceed $15 million for the preceding three years ("very small business") received a 25 percent discount on its winning bid. A bidder that had combined total assets of less than $500 million and combined gross revenues of less than $125 million in each of the last two years qualified for entrepreneur status. Four winning bidders that identified themselves as very small businesses won 17 licenses. Three of the winning bidders that identified themselves as a small business won five licenses. Additionally, one other winning bidder that qualified for entrepreneur status won 2 licenses.

52. *Cellular Licensees.* The SBA has developed a small business size standard for wireless firms within the new economic census category of "Wireless Telecommunications Carriers (except satellite)." Under this new category, the SBA deems a wireless business to be small if it has 1,500 or fewer employees. The data the Commission presents on the number of small entities is based on the information gathered in conjunction with the prior economic census category of "Cellular and Other Wireless Telecommunications"—the small business size standard in effect prior to the adoption of the new size standard by the SBA in 2008. Since no new data has been acquired after the adoption of the new size standard, the Commission provides the only data it has available which is based on data collected before the new size standard went into effect.

For the census category of "Cellular and Other Wireless Telecommunications," Census Bureau data for 2002 show that there were 1,397 firms in this category that operated for the entire year. Of this total, 1,378 firms had employment of 999 or fewer employees, and 19 firms had employment of 1,000 employees or more. Thus, under this category and size standard, the majority of firms can be considered small.

53. *Broadband Personal Communications Service.* The broadband Personal Communications Service (PCS) spectrum is divided into six frequency blocks designated A through F, and the Commission has held auctions for each block. The Commission has created a small business size standard for Blocks C and F as an entity that has average gross revenues of less than $40 million in the three previous calendar years. For Block F, an additional small business size standard for "very small business" was added and is defined as an entity that, together with its affiliates, has average gross revenues of not more than $15 million for the preceding three calendar years. These small business size standards, in the context of broadband PCS auctions, have been approved by the SBA. No small businesses within the SBA-approved small business size standards bid successfully for licenses in Blocks A and B. There were 90 winning bidders that qualified as small entities in the Block C auctions. A total of 93 "small" and "very small" business bidders won approximately 40 percent of the 1,479 licenses for Blocks D, E, and F. On March 23, 1999, the Commission reauctioned 155 C, D, E, and F Block licenses; there were 113 small business winning bidders. On January 26, 2001, the Commission completed the auction of 422 C and F PCS licenses in Auction 35. Of the 35 winning bidders in this auction, 29 qualified as "small" or "very small" businesses. Subsequent events concerning Auction 35, including judicial and agency determinations, resulted in a total of 163 C and F Block licenses being available.

54. *Narrowband Personal Communications Service.* In 1994, the Commission conducted an auction for Narrowband PCS licenses. A second auction was also conducted later in 1994. For purposes of the first two Narrowband PCS auctions, "small businesses" were entities with average gross revenues for the prior three calendar years of $40 million or less. Through these auctions, the Commission awarded a total of 41 licenses, 11 of which were obtained by four small businesses. To ensure meaningful participation by small business entities in future auctions, the Commission adopted a two-tiered small business size standard in the Narrowband PCS Second Report and Order. A "small business" is an entity that, together with affiliates and controlling interests, has average gross revenues for the three preceding years of not more than $40 million. A "very small business" is an entity that, together with affiliates and controlling interests, has average gross revenues for the three preceding years of not more than $15 million. The SBA has approved these small business size standards. A third auction was conducted in 2001. Here, five bidders won 317 (Metropolitan Trading Areas and nationwide) licenses. Three of these claimed status as a small or very small entity and won 311 licenses.

55. *Specialized Mobile Radio.* The Commission awards "small entity" bidding credits in auctions for Specialized Mobile Radio (SMR) geographic area licenses in the 800 MHz and 900 MHz bands to firms that had revenues of no more than $15 million in each of the three previous calendar years. The Commission awards "very small entity" bidding credits to firms that had revenues of no more than $3 million in each of the three previous calendar years. The SBA has approved these small business size standards for the 900 MHz Service. The Commission has held auctions for geographic area licenses in the 800 MHz and 900 MHz bands. The 900 MHz SMR auction was completed in 1996. Sixty bidders claiming that they qualified as small businesses under the $15 million size standard won 263 geographic area licenses in the 900 MHz SMR band. The 800 MHz SMR auction for the upper 200 channels was conducted in 1997. Ten bidders claiming that they qualified as small businesses under the $15 million size standard won 38 geographic area licenses for the upper 200 channels in the 800 MHz SMR band. A second auction for the 800 MHz band was conducted in 2002 and included 23 BEA licenses. One bidder claiming small business status won five licenses.

56. The auction of the 1,050 800 MHz SMR geographic area licenses for the General Category channels began was conducted in 2000. Eleven bidders won 108 geographic area licenses for the General Category channels in the 800 MHz SMR band qualified as small businesses under the $15 million size standard. In an auction completed in 2000, a total of 2,800 Economic Area licenses in the lower 80 channels of the 800 MHz SMR service were awarded. Of the 22 winning bidders, 19 claimed "small business" status and won 129 licenses. Thus, combining all three auctions, 40 winning bidders for geographic licenses in the 800 MHz SMR band claimed status as small business.

57. In addition, there are numerous incumbent site-by-site SMR licensees and licensees with extended implementation authorizations in the 800 and 900 MHz bands. The Commission does not know how many firms provide 800 MHz or 900 MHz geographic area SMR pursuant to extended implementation authorizations, nor how many of these providers have annual revenues of no more than $15 million. One firm has over $15 million in revenues. In addition, the Commission does not know how many of these firms have 1500 or fewer employees. The Commission assumes, for purposes of this analysis, that all of the remaining existing extended implementation authorizations are held by small entities, as that small business size standard is approved by the SBA.

58. *Rural Radiotelephone Service.* The Commission has not adopted a size standard for small businesses specific to the Rural Radiotelephone Service. A significant subset of the Rural Radiotelephone Service is the Basic Exchange Telephone Radio System ("BETRS"). In the present context, the Commission will use the SBA's small business size standard applicable to Wireless Telecommunications Carriers (except Satellite), *i.e.,* an entity employing no more than 1,500 persons. There are approximately 1,000 licensees in the Rural Radiotelephone Service, and the Commission estimates that there are 1,000 or fewer small entity licensees in the Rural Radiotelephone Service that may be affected by the rules and policies adopted herein.

59. *Mobile Satellite Service Carriers.* Neither the Commission nor the U.S. Small Business Administration has developed a small business size standard specifically for mobile satellite service licensees. The appropriate size standard is therefore the SBA standard for Satellite Telecommunications, which provides that such entities are small if they have $13.5 million or less in annual revenues. Currently, the Commission's records show that there are 31 entities authorized to provide voice and data MSS in the United States. The Commission does not have sufficient information to determine which, if any, of these parties are small entities. The Commission notes that small businesses are not likely to have the financial ability to become MSS system operators because of high implementation costs, including

construction of satellite space stations and rocket launch, associated with satellite systems and services.

60. *220 MHz Radio Service—Phase I Licensees.* The 220 MHz service has both Phase I and Phase II licenses. Phase I licensing was conducted by lotteries in 1992 and 1993. There are approximately 1,515 such non-nationwide licensees and four nationwide licensees currently authorized to operate in the 220 MHz Band. The Commission has not developed a definition of small entities specifically applicable to such incumbent 220 MHz Phase I licensees. To estimate the number of such licensees that are small businesses, the Commission applies the small business size standard under the SBA rules applicable to Wireless Telecommunications Carriers (except Satellite). This category provides that a small business is a wireless company employing no more than 1,500 persons. The Commission estimates that most such licensees are small businesses under the SBA's small business standard.

61. *220 MHz Radio Service—Phase II Licensees.* The 220 MHz service has both Phase I and Phase II licenses. The Phase II 220 MHz service is a new service, and is subject to spectrum auctions. In the *220 MHz Third Report and Order,* the Commission adopted a small business size standard for defining "small" and "very small" businesses for purposes of determining their eligibility for special provisions such as bidding credits and installment payments. This small business standard indicates that a "small business" is an entity that, together with its affiliates and controlling principals, has average gross revenues not exceeding $15 million for the preceding three years. A "very small business" is defined as an entity that, together with its affiliates and controlling principals, has average gross revenues that do not exceed $3 million for the preceding three years. The SBA has approved these small size standards. Auctions of Phase II licenses commenced on and closed in 1998. In the first auction, 908 licenses were auctioned in three different-sized geographic areas: Three nationwide licenses, 30 Regional Economic Area Group (EAG) Licenses, and 875 Economic Area (EA) Licenses. Of the 908 licenses auctioned, 693 were sold. Thirty-nine small businesses won 373 licenses in the first 220 MHz auction. A second auction included 225 licenses: 216 EA licenses and 9 EAG licenses. Fourteen companies claiming small business status won 158 licenses. A third auction included four licenses: 2 BEA licenses and 2 EAG licenses in the 220 MHz Service. No small or very small business won any of these licenses. In 2007, the Commission conducted a fourth auction of the 220 MHz licenses. Bidding credits were offered to small businesses. A bidder with attributed average annual gross revenues that exceeded $3 million and did not exceed $15 million for the preceding three years ("small business") received a 25 percent discount on its winning bid. A bidder with attributed average annual gross revenues that did not exceed $3 million for the preceding three years received a 35 percent discount on its winning bid ("very small business"). Auction 72, which offered 94 Phase II 220 MHz Service licenses, concluded in 2007. In this auction, five winning bidders won a total of 76 licenses. Two winning bidders identified themselves as very small businesses won 56 of the 76 licenses. One of the winning bidders that identified themselves as a small business won 5 of the 76 licenses won.

62. *Wireless Telephony.* Wireless telephony includes cellular, personal communications services (PCS), and specialized mobile radio (SMR) telephony carriers. As noted, the SBA has developed a small business size standard for Wireless Telecommunications Carriers (except Satellite). Under the SBA small business size standard, a business is small if it has 1,500 or fewer employees. According to *Trends in Telephone Service* data, 434 carriers reported that they were engaged in wireless telephony. Of these, an estimated 222 have 1,500 or fewer employees and 212 have more than 1,500 employees. The Commission has estimated that 222 of these are small under the SBA small business size standard.

63. *Air-Ground Radiotelephone Service.* The Commission has previously used the SBA's small business definition applicable to Wireless Telecommunications Carriers (except Satellite), *i.e.,* an entity employing no more than 1,500 persons. There are approximately 100 licensees in the Air-Ground Radiotelephone Service, and under that definition, the Commission estimates that almost all of them qualify as small entities under the SBA definition. For purposes of assigning Air-Ground Radiotelephone Service licenses through competitive bidding, the Commission has defined "small business" as an entity that, together with controlling interests and affiliates, has average annual gross revenues for the preceding three years not exceeding $40 million. A "very small business" is defined as an entity that, together with controlling interests and affiliates, has average annual gross revenues for the preceding three years not exceeding $15 million. These definitions were approved by the SBA. In 2006, the Commission completed an auction of nationwide commercial Air-Ground Radiotelephone Service licenses in the 800 MHz band (Auction 65). Later in 2006, the auction closed with two winning bidders winning two Air-Ground Radiotelephone Services licenses. Neither of the winning bidders claimed small business status.

64. *Aviation and Marine Radio Services.* There are approximately 26,162 aviation, 34,555 marine (ship), and 3,296 marine (coast) licensees. The Commission has not developed a small business size standard specifically applicable to all licensees. For purposes of this analysis, the Commission will use the SBA small business size standard for the category Wireless Telecommunications Carriers (except Satellite), which is 1,500 or fewer employees. The Commission is unable to determine how many of those licensed fall under this standard. For purposes of the Commission's evaluations in this analysis, the Commission estimates that there are up to approximately 62,969 licensees that are small businesses under the SBA standard. In 1998, the Commission held an auction of 42 VHF Public Coast licenses in the 157.1875–157.4500 MHz (ship transmit) and 161.775–162.0125 MHz (coast transmit) bands. For this auction, the Commission defined a "small" business as an entity that, together with controlling interests and affiliates, has average gross revenues for the preceding three years not to exceed $15 million dollars. In addition, a "very small" business is one that, together with controlling interests and affiliates, has average gross revenues for the preceding three years not to exceed $3 million dollars. Further, the Commission made available Automated Maritime Telecommunications System ("AMTS") licenses in Auctions 57 and 61. Winning bidders could claim status as a very small business or a very small business. A very small business for this service is defined as an entity with attributed average annual gross revenues that do not exceed $3 million for the preceding three years, and a small business is defined as an entity with attributed average annual gross revenues of more than $3 million but less than $15 million for the preceding three years. Three of the winning bidders in Auction 57 qualified as small or very small businesses, while three winning entities in Auction 61 qualified as very small businesses.

65. *Fixed Microwave Services.* Fixed microwave services include common carrier, private operational-fixed, and broadcast auxiliary radio services. At present, there are approximately 22,015 common carrier fixed licensees and 61,670 private operational-fixed licensees and broadcast auxiliary radio licensees in the microwave services. The Commission has not created a size standard for a small business specifically with respect to fixed microwave services. For purposes of this analysis, the Commission uses the SBA small business size standard for the category Wireless Telecommunications Carriers (except Satellite), which is 1,500 or fewer employees. The Commission does not have data specifying the number of these licensees that have no more than 1,500 employees, and thus are unable at this time to estimate with greater precision the number of fixed microwave service licensees that would qualify as small business concerns under the SBA's small business size standard. Consequently, the Commission estimates that there are 22,015 or fewer common carrier fixed licensees and 61,670 or fewer private operational-fixed licensees and broadcast auxiliary radio licensees in the microwave services that may be small and may be affected by the rules and policies proposed herein. The Commission notes, however, that the common carrier microwave fixed licensee category includes some large entities.

66. *Local Multipoint Distribution Service.* Local Multipoint Distribution Service (LMDS) is a fixed broadband point-to-multipoint microwave service that provides for two-way video telecommunications. The auction of the 986 LMDS licenses began and closed in 1998. The Commission established a small business size standard for LMDS licenses as an entity that has average gross revenues of less than $40 million in the three previous calendar years. An additional small business size standard for "very small business" was added as an entity that, together with its affiliates, has average gross revenues of not more than $15 million for the preceding three calendar years. The SBA has approved these small business size standards in the context of LMDS auctions. There were 93 winning bidders that qualified as small entities in the LMDS auctions. A total of 93 small and very small business bidders won approximately 277 A Block licenses and 387 B Block licenses. In 1999, the Commission re-auctioned 161 licenses; there were 32 small and very small businesses winning that won 119 licenses.

67. *Offshore Radiotelephone Service.* This service operates on several ultra high frequencies ("UHF") television broadcast channels that are not used for television broadcasting in the coastal areas of States bordering the Gulf of Mexico. There is presently one licensee in this service. The Commission does not have information whether that licensee would qualify as small under the SBA's small business size standard for "Cellular and Other Wireless Telecommunications" services. Under that SBA small business size standard, a business is small if it has 1,500 or fewer employees.

68. *39 GHz Service.* The Commission created a special small business size standard for 39 GHz licenses—an entity that has average gross revenues of $40 million or less in the three previous calendar years. An additional size standard for "very small business" is: An entity that, together with affiliates, has average gross revenues of not more than $15 million for the preceding three calendar years. The SBA has approved these small business size standards. The auction of the 2,173 39 GHz licenses, began and closed in 2000. The 18 bidders who claimed small business status won 849 licenses.

69. *218–219 MHz Service.* The first auction of 218–219 MHz (previously referred to as the Interactive and Video Data Service or IVDS) spectrum resulted in 178 entities winning licenses for 594 Metropolitan Statistical Area ("MSAs"). Of the 594 licenses, 567 were won by 167 entities qualifying as a small business. For that auction, the Commission defined a small business entity that, together with its affiliates, has no more than a $6 million net worth and, after Federal income taxes (excluding any carry over losses), has no more than $2 million in annual profits each year for the previous two years. In the *218–219 MHz Report and Order and Memorandum Opinion and Order,* the Commission defined a small business as an entity that, together with its affiliates and persons or entities that hold interests in such an entity and their affiliates, has average annual gross revenues not exceeding $15 million for the preceding three years. A very small business is defined as an entity that, together with its affiliates and persons or entities that hold interests in such an entity and its affiliates, has average annual gross revenues not exceeding $3 million for the preceding three years. The SBA has approved of these definitions. A subsequent auction is not yet scheduled. Given the success of small businesses in the previous auction, and the prevalence of small businesses in the subscription television services and message communications industries, the Commission assumes for purposes of this analysis that in future auctions, many, and perhaps most, of the licenses may be awarded to small businesses.

70. *Incumbent 24 GHz Licensees.* This analysis may affect incumbent licensees who were relocated to the 24 GHz band from the 18 GHz band, and applicants who wish to provide services in the 24 GHz band. The applicable SBA small business size standard is that of Wireless Telecommunications Carriers (except Satellite). This category provides that such a company is small if it employs no more than 1,500 persons. The broader census data notwithstanding, the Commission believes that there are only two licensees in the 24 GHz band that were relocated from the 18 GHz band, Teligent and TRW, Inc. It is the Commissions' understanding that Teligent and its related companies have less than 1,500 employees, though this may change in the future. TRW is not a small entity. There are approximately 122 licensees in the Rural Radiotelephone Service, and the Commission estimates that there are 122 or fewer small entity licensees in the Rural Radiotelephone Service that may be affected by the rules and policies proposed herein.

71. *Future 24 GHz Licensees.* With respect to new applicants in the 24 GHz band, the Commission has defined "small business" as an entity that, together with controlling interests and affiliates, has average annual gross revenues for the three preceding years not exceeding $15 million. "Very small business" in the 24 GHz band is defined as an entity that, together with controlling interests and affiliates, has average gross revenues not exceeding $3 million for the preceding three years. The SBA has approved these definitions. The Commission will not know how many licensees will be small or very small businesses until the auction, if required, is held.

72. *1670–1675 MHz Services.* An auction for one license in the 1670–1675 MHz band was conducted in 2003. One license was awarded. The winning bidder was not a small entity.

73. *3650–3700 MHz band.* In March 2005, the Commission released a *Report and Order and Memorandum Opinion and Order* that provides for nationwide, non-exclusive licensing of terrestrial operations, utilizing contention-based technologies, in the 3650 MHz band (*i.e.,* 3650–3700 MHz). As of September 2009, more than 1,080 licenses have been granted and more than 4,870 sites have been registered. The Commission

has not developed a definition of small entities applicable to 3650–3700 MHz band nationwide, non-exclusive licensees. However, the Commission estimates that the majority of these licensees are Internet Access Service Providers (ISPs) and that most of those licensees are small businesses.

74. *Satellite Telecommunications and All Other Telecommunications.* These two economic census categories address the satellite industry. The first category has a small business size standard of $15 million or less in average annual receipts, under SBA rules. The second has a size standard of $25 million or less in annual receipts. The most current Census Bureau data in this context, however, are from the (last) economic census of 2002, and the Commission will use those figures to gauge the prevalence of small businesses in these categories.

75. The category of Satellite Telecommunications "comprises establishments primarily engaged in providing telecommunications services to other establishments in the telecommunications and broadcasting industries by forwarding and receiving communications signals via a system of satellites or reselling satellite telecommunications." For this category, Census Bureau data for 2002 show that there were a total of 371 firms that operated for the entire year. Of this total, 307 firms had annual receipts of under $10 million, and 26 firms had receipts of $10 million to $24,999,999. Consequently, the Commission estimates that the majority of Satellite Telecommunications firms are small entities that might be affected by the Commission's action.

76. The second category of All Other Telecommunications comprises, *inter alia,* "establishments primarily engaged in providing specialized telecommunications services, such as satellite tracking, communications telemetry, and radar station operation. This industry also includes establishments primarily engaged in providing satellite terminal stations and associated facilities connected with one or more terrestrial systems and capable of transmitting telecommunications to, and receiving telecommunications from, satellite systems." For this category, Census Bureau data for 2002 show that there were a total of 332 firms that operated for the entire year. Of this total, 303 firms had annual receipts of under $10 million and 15 firms had annual receipts of $10 million to $24,999,999. Consequently, the Commission estimates that the majority of All Other Telecommunications firms are small entities that might be affected by the Commission's action.

D. Description of Projected Reporting, Recordkeeping, and Other Compliance Requirements for Small Entities

77. There are no proposed reporting or recordkeeping requirements for small entities. As noted, the Commission is proposing to require a CMRS carrier receiving a reasonable request to provide automatic roaming on reasonable and not unreasonably discriminatory terms and conditions. The general presumption of reasonableness, however, is rebuttable, and parties may choose to bring roaming disputes to the Commission for resolution.

E. Steps Taken To Minimize the Significant Economic Impact on Small Entities, and Significant Alternatives Considered

78. The RFA requires an agency to describe any significant alternatives that it has considered in developing its approach, which may include the following four alternatives (among others): "(1) The establishment of differing compliance or reporting requirements or timetables that take into account the resources available to small entities; (2) the clarification, consolidation, or simplification of compliance and reporting requirements under the rule for such small entities; (3) the use of performance rather than design standards; and (4) an exemption from coverage of the rule, or any part thereof, for such small entities."

79. In the previous *2007 Report and Order,* the Commission clarified that automatic roaming is a common carrier obligation for CMRS carriers, requiring them to provide roaming services to other carriers upon reasonable request and on a just, reasonable, and non-discriminatory basis pursuant to Sections 201 and 202 of the Communications Act. In adopting this requirement and promulgating the related rule, the Commission determined that, when a reasonable request is made by a technologically compatible CMRS carrier, a host CMRS carrier is obligated under Sections 332(c)(1)(B) and 201(a) to provide automatic roaming on a just, reasonable, and non-discriminatory basis to the requesting carrier outside of the requesting carrier's home market.

80. As noted, in the *Order on Reconsideration,* the Commission eliminates the home roaming exclusion adopted in 2007. Instead, the Commission will treat requests for automatic roaming in home markets under the same framework as other requests for automatic roaming. Thus, the Commission will generally presume that such a request is reasonable in the first instance if the requesting CMRS carrier's network is technologically compatible with the would-be host carrier's network, and the Commission will require that a CMRS carrier receiving a reasonable request to provide automatic roaming to the requesting carrier on reasonable and not unreasonably discriminatory terms and conditions. Finally, this presumption of reasonableness is rebuttable, and parties may choose to bring roaming disputes to the Commission for resolution.

81. Every carrier, including small and nationwide carriers, relies on roaming to fill-in gaps in its network coverage. The Commission finds that the modifications above strike an appropriate balance between the interests of existing carriers with robust networks and those of other carriers, including new market entrants and smaller, regional or rural carriers by offering both groups the flexibility and sufficient time to plan their service roll out in their license areas. With this decision, the Commission continues to strive to adopt policies that balance competing interests, including—promoting competition among multiple carriers, ensuring that consumers have access to seamless coverage nationwide, and providing incentives for all carriers to invest and innovate by using available spectrum and constructing wireless network facilities on a widespread basis.

82. With respect to Sprint Nextel's petition for reconsideration, the Commission reaffirms the decision to extend automatic roaming obligations to push-to-talk (PTT) services, and notes the Commission has previously addressed the steps taken to minimize the impact on small businesses in this context in the FRFA adopted in conjunction with the *2007 Report and Order.*

83. *Report to Congress:* The Commission will send a copy of the *Order on Reconsideration,* including this FRFA, in a report to be sent to Congress and the Government Accountability Office pursuant to the Congressional Review Act. In addition, the Commission will send a copy of the *Order on Reconsideration,* including this FRFA, to the Chief Counsel for Advocacy of the SBA. A copy of the *Order on Reconsideration* and this FRFA (or summaries thereof) will also be published in the **Federal Register.**

B. Paperwork Reduction Act Analysis

84. Concerning the *Order on Reconsideration,* this document does

not contain an information collection subject to the Paperwork Reduction Act of 1995 (PRA), Public Law 104–13. Therefore, it does not contain any new or modified "information collection burden for small business concerns with fewer than 25 employees," pursuant to the Small Business Paperwork Relief Act of 2002, Public Law 107–198.

85. Concerning the *Second FNPRM,* this document does not contain an information collection subject to the Paperwork Reduction Act of 1995 (PRA), Public Law 104–13. Therefore, it does not contain any new or modified "information collection burden for small business concerns with fewer than 25 employees," pursuant to the Small Business Paperwork Relief Act of 2002, Public Law 107–198.

C. Congressional Review Act

86. The Commission will send a copy of this *Order on Reconsideration and Second Further Notice of Proposed Rulemaking* in a report to be sent to Congress and the Government Accountability Office, pursuant to the Congressional Review Act.

D. Contact Persons

87. For further information concerning this proceeding, please contact Peter Trachtenberg, Spectrum and Competition Policy Division at 202–418–7369, Christina Clearwater, Spectrum and Competition Policy Division at 202–418–1893 or Nese Guendelsberger, Spectrum and Competition Policy Division at 202–418–0634.

IV. Ordering Clauses

88. Accordingly, *it is ordered,* pursuant to the authority contained in Sections 1, 4(i), 201, 202, 251(a), 253, 303(r), and 332(c)(1)(B) of the Communications Act of 1934, as amended, 47 U.S.C. 151, 154(i), 201, 202, 251(a), 253, 303(r), and 332(c)(1)(B), and Section 1.429 of the Commission's rules, 47 CFR 1.429, this *Order on Reconsideration and Second Further Notice of Proposed Rulemaking is hereby adopted.*

89. *It is further ordered* Section 20.12 of the Commission's rules *is amended* as specified in the Final Rules, and such rule amendments shall be effective May 28, 2010.

90. *It is further ordered* the Petitions for Reconsiderations filed by Leap Wireless International, Inc., MetroPCS Communications, Inc., Spectrum Co., LLC, Sprint Nextel, and T–Mobile USA, Inc. *are hereby granted in part and denied in part* to the extent expressed herein.

91. *It is further ordered* the Commission's Consumer and Governmental Affairs Bureau, Reference Information Center, SHALL SEND a copy of this *Order on Reconsideration and Second Further Notice of Proposed Rulemaking,* including the Initial Regulatory Flexibility Analysis and Final Regulatory Flexibility Analysis, to the Chief Counsel for Advocacy of the Small Business Administration.

List of Subjects in 47 CFR Part 20

Communications common carriers, Communications equipment, and Radio.

Marlene H. Dortch,

Secretary, Federal Communications Commission.

Final Rules

■ For the reason discussed in the preamble, the Federal Communications Commission amends 47 CFR part 20 as follows:

PART 20—COMMERCIAL MOBILE RADIO SERVICES

■ 1. **Authority:** 47 U.S.C. 154, 160, 201, 251–254, 303, and 332 unless otherwise noted.

■ 2. In § 20.3 remove the definitions "Home Carrier" and "Home Market" and revise the definition of "Host Carrier" to read as follows:

§ 20.3 Definitions.

* * * * *

Host Carrier. For automatic roaming, the host carrier is a facilities-based CMRS carrier on whose system another carrier's subscriber roams. A facilities-based CMRS carrier may, on behalf of its subscribers, request automatic roaming service from a host carrier.

* * * * *

■ 3. In § 20.12 revise paragraph (d) to read as follows:

§ 20.12 Resale and roaming.

* * * * *

(d) *Automatic Roaming.* Upon a reasonable request, it shall be the duty of each host carrier subject to paragraph (a)(2) of this section to provide automatic roaming to any technologically compatible, facilities-based CMRS carrier on reasonable and not unreasonably discriminatory terms and conditions, pursuant to Sections 201 and 202 of the Communications Act, 47 U.S.C. 201 and 202. The Commission shall presume that a request by a technologically compatible CMRS carrier for automatic roaming is reasonable pursuant to Sections 201 and 202 of the Communications Act, 47 U.S.C. 201 and 202. This presumption may be rebutted on a case by case basis. The Commission will resolve automatic roaming disputes on a case-by-case basis, taking into consideration the totality of the circumstances presented in each case.

[FR Doc. 2010–9832 Filed 4–27–10; 8:45 am]

BILLING CODE 6712–01–P

DEPARTMENT OF COMMERCE

National Oceanic and Atmospheric Administration

50 CFR Parts 223 and 224

[Docket No. 080229341–0108–03]

RIN 0648–XF89

Endangered and Threatened Wildlife and Plants: Threatened Status for the Puget Sound/Georgia Basin Distinct Population Segments of Yelloweye and Canary Rockfish and Endangered Status for the Puget Sound/Georgia Basin Distinct Population Segment of Bocaccio Rockfish

AGENCY: National Marine Fisheries Service (NMFS), National Oceanic and Atmospheric Administration (NOAA), Commerce.

ACTION: Final rule.

SUMMARY: We, the NMFS, issue a final determination to list the Puget Sound/Georgia Basin Distinct Population Segments (DPSs) of yelloweye rockfish (*Sebastes ruberrimus*) and canary rockfish (*Sebastes pinniger*) as threatened, and bocaccio rockfish (*Sebastes paucispinis*) as endangered under the Endangered Species Act (ESA). We intend to propose protective regulations for yelloweye and canary rockfish under ESA section 4(d) and critical habitat for all three species in separate rulemakings, and will solicit public comments for these rulemakings separately.

DATES: This final rule is effective on July 27, 2010.

ADDRESSES: NMFS, Protected Resources Division, 7600 Sandpoint Way, NE., Building #1, Seattle, WA 98115.

FOR FURTHER INFORMATION CONTACT: Dan Tonnes at the address above or at (206) 526–4643, or Dwayne Meadows, Office of Protected Resources, Silver Spring, MD (301) 713–1401. The final rule, references and other materials relating to this determination can be found on our Web site at *http://www.nwr.noaa.gov.*

SUPPLEMENTARY INFORMATION:

Background

On April 9, 2007, we received a petition from Mr. Sam Wright of

Olympia, Washington, to list stocks of greenstriped rockfish, redstripe rockfish, yelloweye rockfish, canary rockfish, and bocaccio, in Puget Sound as endangered or threatened species under the ESA and to designate critical habitat. Puget Sound is part of a larger inland system, the Georgia Basin, situated between southern Vancouver Island and the mainland coasts of Washington State and British Columbia. We declined to initiate a review of the species' status under the ESA, finding that the petition failed to present substantial scientific or commercial information to suggest that the petitioned actions may be warranted (72 FR 56986; October 5, 2007). On October 29, 2007, we received a letter from Sam Wright presenting information that was not included in the April 2007 petition, and requesting that we reconsider our October 5, 2007, decision not to initiate a review of the species' status. We considered the supplemental information provided in the letter and the information submitted previously in the April 2007 petition as a new petition to list these species and to designate critical habitat. The supplemental information included additional details on the life histories of rockfish supporting the case that individuals of these species occurring in Puget Sound may be unique and additional information on recreational harvest levels suggesting significant declines of rockfish abundance. We determined that greenstriped rockfish and redstripe rockfish did not warrant listing under the ESA, but that the bocaccio, yelloweye and canary rockfishes may warrant listing under the ESA; and we therefore initiated status reviews of these three species (73 FR 14195; March 17, 2008).

The overall steps we follow when evaluating the ESA status of a species are to: (1) Delineate the species under consideration; (2) review the status of the species; (3) consider the ESA section 4(a)(1) factors to identify threats facing the species; (4) assess whether certain protective efforts mitigate these threats; and (5) predict the species' future persistence. We provide more detailed information and findings regarding each of these steps later in this notice.

To ensure that this assessment was based on the best available scientific and commercial information, we formed a Biological Review Team (BRT) comprised of Federal scientists from our Northwest and Southwest Fisheries Science Centers. We asked the BRT to first determine whether yelloweye rockfish, canary rockfish and bocaccio warrant delineation into DPSs, using the criteria in the joint NMFS—U.S. Fish and Wildlife Service (FWS) DPS policy (61 FR 4722; February 7, 1996). We also asked the BRT to assess the level of extinction risk facing each species and to describe their confidence that the species is at high risk, moderate risk, or neither. We described a species with high risk as one that is at or near a level of abundance, productivity, and/or spatial structure that places its persistence in question. We described a species at moderate risk as one that exhibits a trajectory indicating that it is more likely than not to be at a high level of extinction risk in the foreseeable future, with the appropriate time horizon depending on the nature of the threats facing the species and the species' life history characteristics. The report of the BRT deliberations (Drake *et al.,* 2010) (hereafter "status report") thoroughly describes yelloweye rockfish, canary rockfish, and bocaccio biology and natural history, and assesses demographic risks, threats, limiting factors, and overall extinction risk.

On April 23, 2009, we proposed to list the Puget Sound/Georgia Basin DPSs of yelloweye rockfish and canary rockfish as threatened and bocaccio rockfish as endangered species under the ESA (74 FR 18516). We solicited comments and suggestions from all interested parties including the public, other governmental agencies, the Government of Canada, the scientific community, industry, and environmental groups. Specifically, we requested information regarding: (1) Population structure of yelloweye rockfish, canary rockfish, and bocaccio; (2) biological or other relevant data concerning any threats to the rockfish DPSs we propose for listing; (3) the range, distribution, and abundance of these rockfish DPSs; (4) current or planned activities within the range of the rockfish DPSs we propose for listing and their possible impact on these DPSs; and (5) efforts being made to protect rockfish DPSs we propose to list. Subsequent to the proposed rule (74 FR 18516, April 23, 2009), the BRT produced an updated status report (Drake *et al.,* 2010) that summarizes new and additional information that has become available since release of the draft status report (Drake *et al.,* 2008), responds to substantive peer review and public comments on the draft status report and the proposed rule and presents the final BRT conclusions on the status of the Puget Sound/Georgia Basin DPSs of yelloweye rockfish, canary rockfish, and bocaccio.

Summary of Comments Received in Response to the Proposed Rule

We solicited public comment on the proposed listing of each rockfish DPS for 60 days. We did not receive a request for, nor did we hold, a public hearing on the proposal. Public comments were received from four separate commenters, and copies of all public comments received are available online at: *http://www.regulations.gov/search/Regs/.* Summaries of the substantive technical comments received, and our responses, are provided below, organized by category.

In December 2004, the Office of Management and Budget (OMB) issued a Final Information Quality Bulletin for Peer Review establishing minimum peer review standards, a transparent process for public disclosure, and opportunities for public input. Similarly, a joint NMFS/FWS policy requires us to solicit independent expert review from at least three qualified specialists, concurrent with the public comment period (59 FR 34270; July 1, 1994). In accordance with these policies, we solicited technical review of the draft status report (Drake *et al.,* 2008) from six independent experts selected from the academic and scientific community. Each of these reviewers is an expert in rockfish biology or extinction risk assessment methodology. Comments were received from four of the six independent experts from whom we requested technical review. The reviewers were generally supportive of the scientific principles underlying the DPS determination and proposed listing determination for each species.

There was substantial overlap between the comments from the independent expert reviewers and the substantive public comments. The comments were sufficiently similar that we have responded to the peer reviewer's comments through our general responses, which have been placed in three general categories below. The comments received concerning critical habitat are not germane to this listing decision and will not be addressed in this final rule. Those comments will be addressed during any subsequent rulemaking on critical habitat for each rockfish DPS.

Delineation of Distinct Population Segments

Comment 1: One commenter questioned the BRTs interpretation of the strong 1999 year class of coastal bocaccio, and the lack of a strong year class the same year in the Georgia Basin, as additional evidence that the two populations were not highly connected and thus consisted of two discrete units. The commenter stated that "The documented 1999 strong year class was evident in the southern portion of the California Current System. The presence

of a strong year class in northern portions of their range has not been documented." The commenter also stated that the bocaccio length-frequency data reported in Drake *et al.* (2008) do not support the conclusion that successful recruitment is occurring in the Puget Sound and that the presence of mature individuals and many size (age) classes supports a viable population in the region.

Response: We agree with the commenter that the bocaccio recruitment event documented in 1999 was for the California portion of the stock. Thus it could be problematic to conclude that the bocaccio 1999 year class was also strong off the coast of Washington and British Columbia. We therefore do not rely on this factor to conclude that Georgia Basin bocaccio are discrete from coastal bocaccio.

In response to the comment regarding length-frequency data for bocaccio, the BRT conducted an additional analysis to include an examination of the coherence of other year-classes and modified the status report to show the results of this analysis (Drake *et al.,* 2010). Overall, there appears to be little correspondence between age structure of bocaccio inside and outside of the Puget Sound region (referring to the San Juan, Eastern Straits of Juan de Fuca, North Sound, Central Sound, South Sound and Hood Canal regions). This distinction in age structure suggests demographic isolation, which provides additional evidence of discreteness for the Puget Sound/Georgia Basin DPS designation.

Comment 2: One reviewer stated that the genetic data from other rockfish species in Puget Sound provide a reasonable template for the possible genetic structure of yelloweye rockfish, canary rockfish and bocaccio, while another reviewer and one commenter stated that a finding of discreteness was questionable for each species given the lack of genetic data. One of the commenters also noted that bocaccio have unique larval characteristics, and canary rockfish and bocaccio have adult characteristics that distinguish them from the four rockfish species for which we do have genetic information, making it inappropriate to draw inferences from the genetic information for those four species.

Response: While we lack genetic data for yelloweye rockfish, canary rockfish and bocaccio within each DPS, there is substantial additional evidence for each species to support a conclusion, in conjunction with inferences from genetic data available for other rockfish species, that each population in the Georgia Basin is discrete from its coastal counterpart. Regarding bocaccio, we continue to conclude that the best interpretation of all the available scientific information is that bocaccio in the Georgia Basin are discrete from coastal bocaccio. Although adult bocaccio have a greater ability to move over long distances than some other rockfish species, in general, bocaccio life history mirrors the life histories of the four species for which we do have genetic information—live-bearing of young, pelagic larval and juvenile stages, and eventual settlement to benthic habitats. Though larval bocaccio do remain in the pelagic environment longer than some other rockfish species, they are subjected to the same environmental factors within the Georgia Basin that generally limit dispersal as other rockfish species. The retentive circulation patterns of currents within the Puget Sound make it likely that a significant fraction of larvae released by bocaccio (especially in more inland portions of the Sound) are retained within the Sound. Other evidence that Georgia Basin bocaccio populations are discrete from coastal populations includes: The difference in age structure between coastal and inland populations, which suggests the two groups are demographically independent, and the size frequency data from bocaccio in the Puget Sound, which reveals the presence of individuals large enough to be sexually mature.

Regarding canary rockfish, we continue to conclude that the best interpretation of all of the available scientific information is that fish within the Puget Sound/Georgia Basin are discrete from coastal canary rockfish. Although adult canary rockfish have a greater ability to move over long distances than some other rockfish species, in general, canary rockfish life history mirrors the life histories of the four species for which we do have genetic information—live-bearing of young, pelagic larval and juvenile stages, and eventual settlement to benthic habitats. Larval canary rockfish are subjected to the same environmental factors within the Puget Sound/Georgia Basin that generally limit dispersal as other rockfish species. The retentive circulation patterns of currents within the Puget Sound make it likely that a significant fraction of larvae released by canary rockfish (especially in more inland portions of the Sound) are retained within the Sound.

For yelloweye rockfish unpublished genetic studies comparing fish from coastal waters and the waters between Vancouver Island and British Columbia (Withler, personal communication, July 2008) show differentiation between the two groups. Several other lines of evidence support a conclusion that yelloweye rockfish in the Georgia Basin are discrete from coastal populations of yelloweye rockfish. Two aspects of the life history of yelloweye rockfish suggest genetic and potentially demographic isolation from coastal populations: (1) Both as adults and juveniles, yelloweye rockfish are most abundant near rocky substrata. Rocky substrates are infrequent and patchy in distribution in North Puget Sound and the Georgia Strait, and are very rare in Puget Sound proper (waters east of Admiralty Inlet); (2) yelloweye rockfish show very limited movement as adults. These two aspects of their life history, combined with the retentive patterns of circulation of the Georgia Basin, support a conclusion that yelloweye rockfish in the Georgia Basin are discrete from coastal populations of yelloweye rockfish.

Comment 3: One commenter noted a recent report by Field *et al.* (2009) which showed evidence that bocaccio do not show strong population structure within coastal waters, which could serve as evidence that bocaccio within the Puget Sound are likely to be a component of coastal stocks instead of a Puget Sound/Georgia Basin DPS.

Response: We agree that studies of coastal bocaccio populations have found little genetic differentiation over large geographic distances, as reported in Field *et al.* (2009). The report by Field *et al.* (2009) did not conduct genetic analysis of bocaccio from the Georgia Basin. Field *et al.* (2009) did conclude, however, that despite an apparent lack of genetic differentiation, there are sufficient demographic differences between northern and southern populations of Pacific coastal bocaccio to suggest they are demographically independent. This demographic independence of southern and northern coastal bocaccio provides further evidence of population structure, and also supports an inference that Georgia Basin bocaccio populations are discrete from coastal populations.

Comment 4: One commenter stated "* * *whether [Puget Sound/Georgia Basin] bocaccio and canary rockfish constitute self-sustaining populations may be questionable. Their early life stages have not been confirmed in Puget Sound (Garrison and Miller, 1982) and their documented occurrence in Puget Sound proper is restricted to less than 24 locations compared to hundred of records for copper, quillback, and brown rockfish (Washington, 1977; Miller and Borton, 1980).

Response: We agree that juvenile bocaccio rockfish have not been documented within the Puget Sound region, but note that a small number of juvenile canary rockfish were reported by Weispfenning (2006) near the San Juan Islands. Most surveys were conducted after the bocaccio population size was already very low. Given the extremely episodic nature of bocaccio recruitment (Tolimieri and Levin, 2005) and their apparently very low population size, the probability of seeing a juvenile bocaccio is extremely low. Habitats that feature rock and microalgae (kelp species) are most readily used by juvenile bocaccio (Love *et al.,* 1991), and relatively few studies have assessed fish assemblages within these habitats within the region. Thus, it is difficult to draw conclusions from the absence of post-settlement bocaccio in surveys.

We acknowledge that bocaccio and canary rockfish have been documented in fewer areas of the Georgia Basin compared to other rockfish species. However, as an example of their past distribution we note that Moulton and Miller (1987) reported that 222 bocaccio rockfish were recorded in recreational fisheries in 1975, and 327 in 1985. The precise locations where these fish were caught were not reported by Moulton and Miller, though they did identify that all fish were caught in the eastern Strait of Juan de Fuca, the Central Sound, and South Sound. Moulton and Miller (1987) also report that 1,035 canary rockfish were recorded in recreational fisheries in 1975 and 934 in 1985. These fish were caught in the Gulf/Bellingham, San Juan Islands, Hood Canal, Central Puget Sound, South Puget Sound and the eastern Strait of Juan de Fuca regions. In addition, canary rockfish have been reported as bycatch from salmon and bottom fishermen in 2004 to 2007 catch statistics in 6 of the 9 Marine Catch Areas within the DPS (WDFW, unpublished data). Similarly, canary rockfish have been documented as part of the assemblage of fishes in the Puget Sound region for as long as there have been formal fisheries surveys, dating back to at least the 1930s (Williams *et al.,* in press).

Appropriateness of the Scope of the Proposed Rule and Assessment

Comment 5: Several reviewers and commenters discussed our assessment of extinction risk as it related to rockfish abundance data. One reviewer stated that "* * * abundance data for the individual species are not sufficient for independent [extinction] analysis * * *". The same reviewer also noted that the lack of data was further confounded by an overall lack of abundance numbers from fishery independent sources. Another commenter stated that "Given the data gaps identified in the proposed listing rule, it does not seem certain here that the threshold for listing has been met."

Response: The analysis of extinction risk for yelloweye rockfish, canary rockfish and bocaccio was based upon a host of considerations in addition to species abundance. In assessing risk, it is often important to include both qualitative and quantitative information. In previous NMFS status reviews, we have used a "risk matrix" as a method to organize and summarize the professional judgment of a panel of knowledgeable scientists. This approach is described in detail by Wainright and Kope (1999) and has been used in Pacific salmonid status reviews (*e.g.,* Good *et al.,* 2005; Hard *et al.,* 2007), as well as in reviews of Pacific hake, walleye pollock, and Pacific cod (Gustafson *et al.,* 2000), Puget Sound rockfishes (Stout *et al.,* 2001b), Pacific herring (Stout *et al.,* 2001a; Gustafson *et al.,* 2006), and black abalone (Butler *et al.,* 2008). The BRT used this approach here as well.

In this risk matrix approach, the collective condition of individual populations is summarized at the DPS level according to four demographic risk criteria: Abundance, growth rate/productivity, spatial structure/connectivity, and diversity. These viability criteria, outlined in McElhany *et al.* (2000), reflect concepts that are well founded in conservation biology and are generally applicable to a wide variety of species. These criteria describe demographic risks that individually and collectively provide strong indicators of extinction risk. The summary of demographic risks and other pertinent information obtained by this approach is then considered in determining the species' overall level of extinction risk.

When making ESA listing determinations, we must use the best available scientific and commercial data available. The BRT employed the Forest Ecosystem Management Team (FEMAT) voting methodology to address any uncertainties about the subject rockfish DPSs. The FEMAT methodology allows each BRT member to distribute 10 likelihood points among DPSs scenarios, reflecting their view of the probability that the particular category correctly reflects the true DPS status. This method has also been used in all recent status review updates for federally listed Pacific salmon and steelhead (*Oncorhynchus mykiss*) Evolutionary Significant Units (such as Good *et al.,* 2005) as well as reviews of killer whales (Krahn *et al.,* 2002; 2004) and herring (Gustafson *et al.,* 2006).

Despite the general lack of population data from non-fishery sources, the weight of evidence demonstrates that these DPSs abundances have been greatly reduced from historic levels and abundance trends are negative. The analysis of each species status was, in part, determined by available data that shows the relative decline of yelloweye, canary and bocaccio rockfish catch in fishery statistics over the past several decades (FR 18516; April 23, 2009). The analysis of fishery catch data show each species declining at rates faster than the overall rockfish populations in the Puget Sound region. In the case of bocaccio, no fish have been observed in fishery catch statistics since the late 1990s. We agree that fishery independent data for each species, such as the use of drop cameras and remotely operated video surveys, provide important information regarding rockfish status. In particular, fishery independent data from each of the major regions of the DPSs would enhance our understanding of abundance, spatial structure, and demographic profiles (such as the size and relative age structure) of each species. However the available data—including genetic studies from other rockfish and fish species, strong evidence of decline from fisheries data, and unique environmental conditions within the Georgia Basin as viewed through the methodologies and assessments utilized by the BRT (Drake *et al.,* 2010), support the extinction risk assessments that inform this final rule.

Comment 6: Several reviewers and commenters questioned our assessment and conclusions of the overall abundance trends of rockfish within the Puget Sound region as they relate to fishery catch statistics and catch frequencies for yelloweye rockfish, canary rockfish and bocaccio. They also remarked that this assessment was further confounded by fishing regulation changes that may have obscured recent catch statistics. One reviewer stated that "Changes in gear and switches in the targeted species should tend to prolong elevated catch levels in a multispecies time series, so an observed decline in overall catch probably reflects steeper declines in the actual abundance of individual fishes." The reviewer stated that the BRT's analysis of fishery catch data "should produce a conservative estimate of the trend for each species (*i.e.,* the actual trend is probably more negative than identified)." One commenter concurred

with the general population trend analysis that shows that each species was more common in early time series of species compositions and that catch rates and relative abundances of each species have declined. The same commenter noted that early time series data may be obscured by the difficulty of correctly identifying rockfish by untrained samplers.

Response: We recognize that the trend in the aggregate rockfish population does not equate to species specific trends of yelloweye rockfish, canary rockfish and bocaccio. Additionally, the early time series species' compositions were likely obscured by the difficulty of correctly identifying rockfish to species. Because of the lack of time series data, we focused on total rockfish trends and trends in the species composition of the total rockfish assemblage, but also considered information on trends during discrete time periods for each species. Total rockfish abundance has declined and yelloweye rockfish, canary rockfish and bocaccio have become a smaller proportion of the total rockfish assemblage. This analysis allowed the BRT to use the trends in total rockfish as an upper bound on the trends for each species. We agree that this approach should produce a conservative estimate of the overall trend for each species because over time there have been changes in fishing gear and locations (in response to localized depletion of stocks), which may have prolonged harvest rates for each species. In other words, when local rockfish aggregations were fished out, anglers would move to new locations and fishery statistics will not necessarily show these localized depletions (Yamanaka and Lacko, 2001). The available fisheries data do show a reduction of the proportion of yelloweye rockfish, canary rockfish and bocaccio compared to the overall rockfish catch data, and we agree with the reviewer that the reduction in overall abundance may be greater than reflected in the available data.

Comment 7: A commenter stated that the draft status report (Drake *et al.,* 2008) did not "evaluate potential adverse impacts to low abundance rockfish populations due to depensation, especially the sub-set of depensatory mortality factors commonly known as Allee effects."

Response: Allee effects, as applied by the commenter to rockfish populations, is a term to characterize additional viability risks when populations are at very low abundance and cannot find mates (Courchamp *et al.,* 2008). We agree that Allee effects are likely a risk factor for yelloweye rockfish, canary rockfish and bocaccio in all or portions of the Puget Sound/Georgia Basin DPSs. The final status report was clarified to more explicitly discuss the risk from Allee effects (Drake *et al.,* 2010).

Comment 8: Three commenters asked that we assess in more detail existing regulatory programs that may serve to protect rockfish, including habitat protection and fishery management.

Response: In the proposed rule we described our consideration of the effects of existing programs on extinction risk of the three species (FR 18516; April 23, 2009). In response to these comments, we describe the following additional details about these programs. A number of agencies within Washington State have regulatory authority over actions that affect rockfish habitat. The Washington State Departments of Ecology, Natural Resources, Fish and Wildlife, and the Puget Sound Partnership (PSP) are agencies that collectively have various authorities to prevent habitat degradation and loss from a variety of activities, manage aquatic lands, provide technical and planning assistance, fund restoration efforts, and conduct monitoring. The Department of Ecology oversees the State Shoreline Management Act that mandates that each County develop and update policies on the use and protection of the shoreline. Assessing the effectiveness of regulatory programs designed to protect water quality and habitat for rockfish is complicated by the general lack of systematic monitoring that occurs related to specific development and permitting activities. From 2006 to 2008, an additional five miles of bulkheads were constructed along Puget Sound shorelines (Cornwall and Mayo, 2008). These types of shoreline developments can impact nearshore habitat conditions for macroalgae used by juvenile rockfish, and degrade forage fish spawning habitat (Rice, 2006), potentially decreasing food sources of rockfish.

Recently, the PSP released a "State of the Sound" report (PSP 2010) that, in part, assessed the status of the Puget Sound ecosystem through a series of indicators. Of the indicators most closely related to rockfish, their habitat and prey, herring spawn biomass and eelgrass coverage each declined, while the amount of flame retardant chemicals within herring (and harbor seals) showed an increasing trend. One water quality indicator (polycyclic aromatic hydrocarbons levels in Elliot Bay) improved, while another (extent of dissolved oxygen in the Puget Sound) had no clear trend. Additionally the report stated that the "shoreform" indicator, which is the overall condition of the Puget Sound shoreline, also had no clear trend (PSP 2010).

Washington State has a variety of marine protected areas managed by eleven Federal, state, and local agencies (Van Cleve *et al.,* 2009), though some of these areas are outside of the range of the rockfish DPSs. The WDFW has established 25 marine reserves within the DPS, and 16 host rockfish (Palsson *et al.,* 2009), though most of these reserves are within waters shallower than those typically used by adult yelloweye rockfish, canary rockfish, or bocaccio. The WDFW reserves total 2,120.7 acres of intertidal and subtidal habitat. Aside from the WDFW reserves, the Washington State Department of Natural Resources operates an Aquatic Reserve Program that is intended to protect habitat through their statutory ownership authority.

Management objectives and allowed activities within the reserves in the Puget Sound region and along the Pacific coast are diverse (Van Cleve *et al.,* 2009) and there is no comprehensive monitoring program to assess the collective effects of existing protected areas within the Puget Sound region. A recent report identified several impediments to implementing effective monitoring of existing marine protected areas including large areas of the environment to cover, expenses to conduct survey work, insufficient funding for data management and analysis, the challenge of avoiding harm to species or habitats while conducting research, and narrow agency mandates (Van Cleve *et al.,* 2009). The total percentage of the Puget Sound region within reserve status is unknown, though Van Cleve *et al.* (2009) estimate that one to five percent of the Puget Sound region is within a reserve. Compared to fished areas, studies have found higher fish densities, sizes, or reproductive activity in the assessed WDFW marine reserves (Palsson and Pacunski, 1995; Palsson, 1998; Eisenhardt, 2001; 2002; Palsson, 2004). However, since they were established over several decades with unique and somewhat unrelated ecological goals, and encompass relatively small areas (average of 23 acres), the net effect of existing reserves to yelloweye rockfish, canary rockfish and bocaccio abundance, productivity and spatial structure are probably very small. In general, the characteristics of a network of reserves that are relevant to enhancing populations of yelloweye rockfish, canary rockfish and bocaccio include sites in each of the major regions of the DPS, and sites that provide some connectivity to each other

(for larvae). Finally the sites would need to be large enough to collectively encompass diverse habitats that facilitate productivity of individual fish and reserve resiliency to outside disturbances and stressors (Sobel and Dahlgren, 2004).

In 2007, the Canadian government designated approximately 135 rockfish conservation areas that encompasses 30 percent of the area of the inside waters of Vancouver Island. These reserves do not allow directed commercial or recreational harvest for any species of rockfish, nor do they allow harvest of marine species that may incidentally catch rockfish. Since the Canadian reserves were recently established, the effects to rockfish populations are unknown. However, the attributes of these reserves that include the overall size of the network, which encompass a variety of habitats distributed throughout the northern portion of the DPS, will likely provide substantial benefit to rockfish populations. However, the lack of an analogous network in the southern portion of the Georgia Basin still leaves a possible gap in the survival and recovery potential of yelloweye rockfish, canary rockfish and bocaccio.

Consideration of these additional details did not change our extinction risk analysis for yelloweye rockfish, canary rockfish and bocaccio within this final listing determination. The programs and protective efforts described about do not alter the risk factors identified by Drake *et al.* (2010), and discussed in the proposed rule (74 FR 18516, April 23, 2009).

Comment 9: One commenter questioned how future recovery planning could occur given the general lack of precise abundance data, stating "listing these three species at this stage will make it difficult, if not impossible, to establish accurate delisting and recovery criteria."

Response: Future recovery planning efforts for yelloweye rockfish, canary rockfish and bocaccio will incorporate the best available information regarding each species' abundance and spatial structure within the DPS. For instance, we expect that additional abundance data for each species will be available from studies by the WDFW prior to the development of the recovery plan. In addition, the recovery plan itself will identify data gaps that warrant further research. Beyond just identifying delisting criteria, we expect that the recovery plan for each species will also identify specific management actions necessary to achieve recovery of the species.

Biological or Other Relevant Data Concerning Any Threats to Each DPS

Comment 10: Two commenters discussed the role of water quality as it relates to the status of yelloweye rockfish, canary rockfish and bocaccio. Referring to our proposed listing, one commenter stated that "* * * the characterization of nutrient issues and dissolved oxygen problems in Puget Sound is exceedingly broad" One commenter stated that "The impact of hypoxia as a risk to the petitioned rockfish in southern Puget Sound may be overstated in that historical documented occurrences of canary, bocaccio, and yelloweye rockfish do not correspond to areas of poor water quality in southern Puget Sound."

Response: We agree that elevated nutrient levels and low dissolved oxygen levels (causing hypoxia) are not uniformly distributed across the DPS, and that some areas of rockfish habitat are more likely to be affected than others. Specifically, periods of low dissolved oxygen are becoming more widespread in portions of Hood Canal and south of the Tacoma Narrows.

Comment 11: Two commenters discussed contaminants. One commenter noted that our proposed listing adequately characterized what is known and not known regarding the impact or threat of toxic contaminants on each species, and added that "If pelagic prey dominate the diet of a petitioned species it may experience greater exposure to persistent bioaccumulative toxins (PBTs) across a greater spatial range (not just urban areas). Pelagic prey such as herring in Puget Sound have unusually high body burdens of PBTs * * * If petitioned species consume herring or similar pelagic prey, we believe that PBT contamination may have played a role in their decline, and is a risk factor for their recovery."

One commenter asked that we provide additional detail regarding "the level of scientific consensus on the emerging topics of reproductive dysfunction and other sub-lethal affects as a result of contaminant exposure."

Response: We agree that contaminants within forage fish such as herring distribute contaminants across a greater spatial range than just urban areas. The long life span and residency of rockfish in the Georgia Basin increase the risk of exposure and bioaccumulation in individual fish. Although risks from contaminants can affect all life history stages of rockfish, few studies have investigated the effects of toxins on rockfish ecology or physiology. Contaminants may influence growth rates of rockfish. For example, Palsson *et al.* (2009) describe a case in which male rockfish have lower growth rates than females—an unusual pattern for rockfish since males typically grow faster than females. The explanation may be that male rockfish tend to accumulate PCBs, while female's body burden does not increase with time since they lower their toxin level when they release eggs. Thus, the observed difference in growth rate may result from the higher contaminant concentration in males versus females. The full effect of contaminants on rockfish remains unknown, but there is clearly a potential for impact and that warrants further research efforts.

Comment 12: One commenter questioned whether rocky habitat loss has occurred as stated in the proposed rule (74 FR 18516, April 23, 2009). Instead, the commenter stated that "habitat may be degraded due to derelict fishing gear or impaired water quality."

Response: We agree that rocky habitat loss is rare, and other factors have likely reduced rocky habitat suitability in some areas, but note that the loss of rocky habitat has occurred near the Skagit River delta as a result of sedimentation from the Skagit watershed (Grossman *et al.*, in review). We also concur that lost commercial fishing nets and commercial and recreational crab pots (collectively referred to as derelict fishing gear) may be having a large impact on rockfish habitat suitability. Lost gear generally catches on bottom structure such as rocky reefs and large boulders that are also attractive to rockfish (NRC, 2007). Derelict nets trap fine sediments out of the water column, making a layer of soft sediment over rocky areas that changes habitat quality and suitability for benthic organisms (NRC, 2007). This gear covers habitats used by rockfish for shelter and pursuit of food and likely causes a depletion of food sources. For instance, a study of several derelict nets in the San Juan Islands reported an estimated 107 invertebrates and 16 fish (of various species) entangled per day (NRC, 2008). One net had been in place for 15 years, entangling an estimated 16,500 invertebrates and 2,340 fish (NRC, 2008). Though these estimates are coarse, they illustrate the potential impacts of derelict gear within the DPS. In shallower waters used by juvenile rockfish, this gear can reduce kelp overstory coverage and growth.

Comment 13: One commenter requested "* * * that the listing decision process incorporate direct characterization and consideration of climate change effects on rockfish."

Response: The draft and final status report analyzed the effects of climate variability and change on the extinction risk of yelloweye rockfish, canary rockfish and bocaccio rockfish (Drake *et al.*, 2008; 2010). In general, variable ocean conditions (exacerbated by climate change) may increase extinction risk for each species. Marine, estuarine, and freshwater habitat in the Pacific Northwest has been influenced by climate change over the past 50 to100 years and global patterns suggest the long-term trend is for a warmer, less productive ocean regime in the California Current and the Transitional Pacific. Projections for the consequences of climate change in the Georgia Basin include: Continued rise of air and marine water temperatures, altered river and stream flows, increase of winter runoff with decrease in water stored as snow pack, increased river flooding, and continued sea level rise (NMFS, 2007). Related consequences to the Georgia Basin will likely consist of changes to water quality, circulation patterns, biological productivity, habitat distributions, populations of sensitive species, rates of harmful algal blooms, surface wind patterns, and coastal upwelling regimes. In addition, ocean acidification harms invertebrate calcification, photosynthesis, nitrogen fixation and reproduction (Doney *et al.*, 2009). These types of impacts could fundamentally change food web dynamics that cascade to upper-level predators such as rockfish. These types of changes, collectively, could alter habitat conditions that are necessary for rockfish persistence.

Comment 14: A commenter stated that "By a wide margin, the highest bycatch mortality for rockfish occurs in the Puget Sound recreational fishery for the winter Puget Sound blackmouth [immature Chinook salmon]" and not within the lingcod fishery, as stated in Drake *et al.* (2008).

Response: The most recent fishery catch statistics do not show that yelloweye rockfish, canary rockfish and bocaccio bycatch from fishers targeting blackmouth (Chinook) salmon during the winter is high relative to other seasons. Rockfish catch data from 2004 to 2007 provided by the WDFW show that 100 percent of yelloweye rockfish and 95 percent of the canary rockfish bycatch associated with salmon fishing occurs within the May through August time periods (WDFW unpublished data).

Determination of Species Under the ESA

The ESA defines species to include subspecies or a DPS of any vertebrate species which interbreeds when mature (16 U.S.C. 1532(16)). The FWS and NMFS have adopted a joint policy describing what constitutes a DPS of a taxonomic species (61 FR 4722; February 7, 1996). The joint DPS policy identifies two criteria for making DPS determinations: (1) The population must be discrete in relation to the remainder of the taxon (species or subspecies) to which it belongs; and (2) the population must be significant to the remainder of the taxon to which it belongs.

A population segment of a vertebrate species may be considered discrete if it satisfies either one of the following conditions: (1) "It is markedly separated from other populations of the same taxon as a consequence of physical, physiological, ecological, or behavioral factors. Quantitative measures of genetic or morphological discontinuity may provide evidence of this separation"; or (2) "It is delimited by international governmental boundaries within which differences in control of exploitation, management of habitat, conservation status, or regulatory mechanisms exist that are significant in light of section 4(a)(1)(D)" of the ESA.

If a population segment is found to be discrete under one or both of the above conditions, its biological and ecological significance to the taxon to which it belongs is evaluated. This consideration may include, but is not limited to: (1) "Persistence of the discrete population segment in an ecological setting unusual or unique for the taxon; (2) evidence that the loss of the discrete population segment would result in a significant gap in the range of a taxon; (3) evidence that the discrete population segment represents the only surviving natural occurrence of a taxon that may be more abundant elsewhere as an introduced population outside its historic range; and (4) evidence that the discrete population segment differs markedly from other populations of the species in its genetic characteristics."

The ESA defines an endangered species as one that is "in danger of extinction throughout all or a significant portion of its range," and a threatened species as one that is "likely to become an endangered species in the foreseeable future throughout all or a significant portion of its range" (Sections 3(6) and (20) of the ESA). Section 4(a)(1) of the ESA and NMFS's implementing regulations (50 CFR 424) state that we must determine whether a species is endangered or threatened because of any one or a combination of the following factors: (1) The present or threatened destruction, modification, or curtailment of its habitat or range; (2) overutilization for commercial, recreational, scientific, or educational purposes; (3) disease or predation; (4) inadequacy of existing regulatory mechanisms; or (5) other natural or man-made factors affecting its continued existence. We are to make this determination based solely on the best available scientific and commercial information after conducting a review of the status of the species and taking into account any efforts being made by states or foreign governments to protect the species.

Summary of Factors Affecting the Puget Sound/Georgia Basin DPSs

The primary factors responsible for the decline of the three DPSs of rockfishes are overutilization for commercial and recreational purposes, habitat degradation, water quality problems including low dissolved oxygen and elevated contaminant levels, and inadequacy of existing regulatory mechanisms. The factors for decline are addressed collectively in the following section due to their similarity for each species. This section briefly summarizes findings regarding threats to the three DPSs of rockfishes. More details can be found in the status report (Drake *et al.,* 2010), Palsson *et al.,* (2009), and the proposed listing determination (74 FR 18516; April 23, 2009).

The Present or Threatened Destruction, Modification, or Curtailment of Its Habitat or Range

The BRT identified habitat degradation as a threat to these rockfish. In particular, degradation of rocky habitat, loss of eelgrass and kelp, introduction of non-native species that modify habitat, and degradation of water quality were identified as specific threats to rockfish habitat in the Georgia Basin. Though each species has been documented along areas of high relief and non-rocky substrates such as sand, mud and other unconsolidated sediments (Washington, 1977; Miller and Borton, 1980), it is very likely that densities of bocaccio, canary rockfish, and yelloweye rockfish are highest near rocky habitats. Such habitat is extremely limited in Puget Sound, with only 10 km^2 (3.8 sq miles) of such habitat in Puget Sound Proper, and 207 km^2 (80 sq miles) in North Puget Sound (Palsson *et al.*, 2009). Rocky habitat is threatened by, or has been impacted by, derelict fishing gear, construction of bridges, sewer lines and other structures, deployment of cables and pipelines, and burying from dredge spoils and natural subtidal slope movement (Palsson *et al.*, 2009).

Juvenile bocaccio and canary rockfish utilize nearshore waters with substrates of rock or cobble compositions, and/or

kelp species (Love *et al.,* 1991; Love *et al.*, 2002). Habitats with these features likely offer a beneficial mix of warmer temperatures, food and refuge from predators (Love *et al.*, 1991). Areas with floating and submerged kelp species (Families Chordaceace, Alariaceae, Lessoniacea, and Costariaceae, and Laminaricea) support the highest densities of most juvenile rockfish species (Carr, 1983; Halderson and Richards, 1987; Matthews, 1989; Hayden-Spear, 2006). Kelp cover is highly variable and has shown long-term declines in some regions, while kelp beds have increased in areas where artificial substrate provides additional kelp habitat (Palsson *et al.*, 2009). Threats to kelp communities include toxins such as petroleum products which lower photosynthesis and respiration, activities associated with oyster culture and boat operations, and harvest (Mumford, 2007). Indirect stressors to kelp include low dissolved oxygen, eutrophication, and changes in trophic structure resulting from harvest of organisms that feed upon kelp (Mumford, 2007).

Shoreline development has occurred along approximately 30 percent of the Puget Sound (Broadhurst, 1998), and has increased in recent years (Cornwall and Mayo, 2008). Development along the shoreline has been linked to reduced invertebrate abundance and species taxa diversity (Dugan *et al.*, 2003), and reduced forage fish egg viability (Rice, 2006). These are examples of food web changes that may alter forage fish prey composition or abundance for these rockfish.

Non-indigenous species are an emerging threat to biotic habitat in the Puget Sound region. *Sargassum muiticum* is an introduced brown alga that is now common throughout much of the Sound (Drake *et al.*, 2010). The degree to which *Sargassum* influences native macroalgae, eelgrass, or rockfish themselves is not presently understood. Several species of non-indigenous tunicates have been identified in the Puget Sound region. For example, *Ciona savignyi* was initially seen in one location in 2004, but within two years spread to 86 percent of sites surveyed in Hood Canal (Puget Sound Action Team, 2007). The exact impact of invasive tunicates on rockfish or their habitats is unknown, but results in other regions (*e.g.*, Levin *et al.*, 2002) suggest the potential for introduced invertebrates to have widespread impacts on rocky-reef fish populations.

Over the last century, human activities have introduced a variety of toxins into the Georgia Basin at levels that may affect rockfish populations or the prey that support them. Several urban embayments in the Sound have high levels of heavy metals and organic compounds (Palsson *et al.*, 2009). About 32 percent of the sediments in the Puget Sound region are considered to be moderately or highly contaminated (Puget Sound Action Team, 2007). Organisms that live in or eat these sediments are consumed, thus transferring contaminants up the food web to higher level predators like rockfishes, and to a wider geographic area.

Not surprisingly, contaminants such as polychlorinated biphenyls (PCBs), chlorinated pesticides (*e.g.*, DDT), and polybrominated diphenyl ethers (PBDEs) appear in rockfish collected in urban areas (Palsson *et al.*, 2009). While the highest levels of contamination occur in urban areas, toxins can be found in the tissues of fish in all regions of the sound (Puget Sound Action Team, 2007). Rockfish collected in rural areas of the San Juan Islands revealed high levels of mercury and hydrocarbons (West *et al.*, 2002).

Although few studies have investigated the effects of toxins on rockfish ecology or physiology, other fish in the Puget Sound region that have been studied do show a substantial impact. As an example English sole is a demersal fish in the Puget Sound that lives in somewhat similar habitats as rockfish, and reproductive impairment has been documented in individuals from contaminated areas. This reduction effectively decreases the productivity of the species (Landahl *et al.*, 1997). Reproductive function of rockfish is also likely affected by contaminants (Palsson *et al.*, 2009), and other life history stages may be as well (Drake *et al.*, 2010). Some areas with good habitat structure for rockfish are also located in areas that are now subject to high levels of contaminants. This is evidenced by the fact that rockfish were historically captured in great numbers in these areas (Palsson *et al.*, 2009 and Puget Sound Action Team, 2007).

In addition to chemical contamination, water quality in the Puget Sound region is also influenced by sewage, animal waste, and nutrient inputs. The Washington Department of Ecology has been monitoring water quality in the Puget Sound region for several decades. Monitoring includes fecal coliform, nitrogen, ammonium, and dissolved oxygen. In 2005, of the 39 sites sampled, eight were classified as highest concern, and 10 were classified as high concern. Hood Canal has seen persistent and increasing areas of low dissolved oxygen since the mid 1990s. Typically, rockfish move out of areas with dissolved oxygen less than 2 mg/l; however, when low dissolved oxygen waters were quickly upwelled to the surface in 2003, about 26 percent of the rockfish population was killed (Palsson *et al.*, 2009). In addition to Hood Canal, periods of low dissolved oxygen are becoming more widespread in waters south of Tacoma Narrows (Palsson *et al.*, 2009).

Overutilization for Commercial, Recreational, Scientific or Educational Purposes

Our status report (Drake *et al.*, 2010) and the WDFW (Palsson *et al.*, 2009) identify overutilization for commercial and recreational purposes as the leading cause of decline to yelloweye rockfish, canary rockfish and bocaccio in the Puget Sound/Georgia Basin. The evidence is clear that historic overfishing has played a major role in the declines of rockfish in the Puget Sound region (Palsson *et al.*, 2009; Drake *et al.*, 2010; Williams *et al.*, in press). Moreover, the life histories of yelloweye rockfish, canary rockfish and bocaccio make them highly susceptible to overfishing and, once populations are at a low level, recovery can require decades (Parker *et al.*, 2000; Love *et al.*, 2002). In particular, rockfish grow slowly, have a long life span and low natural mortality rates, mature late in life, often have sporadic reproductive success from year to year, may display high fidelity to specific habitats and locations, and require a diverse genetic and age structure to maintain healthy populations (Love *et al.*, 2002). Estimates of rockfish harvest in the Puget Sound region are available for the last 87 years (Palsson *et al.*, 2009). Commercial harvest was very low prior to World War II, rose during the War, and then averaged 125,000 pounds (56,700 kg) between 1945 and 1970. In the 1970s, harvest increased dramatically, peaking in 1980 at 880,000 pounds (399,200 kg). Catches remained high until the early 1990s and then declined dramatically (Palsson *et al.*, 2009). From 1921 to 1970 a total of 3,812,000 pounds (1,729,000 kg) of rockfish were landed in the Puget Sound region, while nearly this same level of harvest (3,968,000 pounds; 1,800,000 kg) was achieved in only 7 years (from 1977 to 1983). The average annual harvest from 1977 to 1990 was nearly four times pre–1970 levels.

Palsson *et al.* (2009) provide a rough estimate of the total rockfish biomass in the Puget Sound region during the 1999 to 2004 time period of 3,205,521 pounds (1,454,000 kg), less than the total harvest from 1977 to 1983. For comparison, exploitation rates for

canary rockfish during the 1980s and 1990s along the U.S. Pacific Coast ranged from 5 to 19 percent (Stewart, 2007), bocaccio ranged from 5 to 31 percent (MacCall, 2008), and yelloweye rockfish ranged from less than 5 percent to about 17 percent (Wallace, 2007). In each of these cases, these high exploitation rates were followed by dramatic declines in population size (Stewart, 2007; Wallace, 2007; MacCall, 2008).

Fishery removals can affect both the absolute abundance of rockfish as well as the relative abundance of larger fish. Palsson *et al.* (2009) examined studies comparing rockfish populations in marine reserves in the Puget Sound region to populations outside reserves, and related this information to long-term trends in rockfish catch data, to draw conclusions about the effects of fishing on rockfish in the Puget Sound region. They noted that rockfish in marine reserves in the Puget Sound region generally are at higher densities than rockfish outside reserves. They considered this information in the context of steep declines in the catch of rockfish after the early 1980s to conclude that the current low abundance of rockfish in the Puget Sound region is likely the result of overfishing. They further noted that rockfish in marine reserves in the Puget Sound region are larger than rockfish outside the reserves.

Coupled with information that the size of rockfish in the Puget Sound region has declined in recent decades, they concluded that fishing has also likely altered the age structure of rockfish populations by removing larger older individuals. Age truncation (the removal of older fish) can occur at even moderate levels of fishing for rockfish (Berkeley *et al.*, 2004). Age truncation has been widely demonstrated for rockfish populations all along the west coast (Mason, 1998; Harvey *et al.*, 2006), even for species not currently categorized as overfished by the Pacific Fishery Management Council. It can have "catastrophic" effects for long-lived species such as rockfish (Longhurst, 2002). For yelloweye rockfish, canary rockfish and bocaccio in the Georgia Basin, it is likely that the age truncation effects of past overfishing are long-lasting and constitute an ongoing threat, particularly because older and larger females are likely to be more fecund and their offspring may have higher survival rates. In addition, fishing can have dramatic impacts on the size or age structure of the population, with effects that can influence ongoing productivity.

Because most rockfish females release larvae on only one day each year, the timing of parturition (giving birth) can be crucial in terms of matching favorable oceanographic conditions for larvae. Larger or older females release larvae earlier in the season compared to smaller or younger females in black, blue, yellowtail, kelp, and darkblotched rockfish (Nichol and Pikitch, 1994; Sogard *et al.*, 2008). Maternal effects on larval quality have been documented for black, blue, gopher, and yellowtail rockfish (Berkeley *et al.*, 2004; Sogard *et al.*, 2008). The mechanism for maternal effects on larval quality across species is the size of the oil globule provided to larvae at parturition, which provides the developing larvae with energy insurance against the risks of starvation (Berkeley *et al.*, 2004; Fisher *et al.*, 2007), and in black rockfish enhances early growth rates (Berkeley *et al.*, 2004). An additional maternal effect in black rockfish indicates that older females are more successful in producing progeny that recruit from primary oocyte to fully developed larvae (Bobko and Berkeley, 2004). In a broad span of species, there is evidence that age or size truncation is associated with increased variability in recruitment. Examples include Icelandic cod (Marteinsdottir and Thorarinsson, 1998), striped bass (Secor, 2000), Baltic cod (Wieland *et al.*, 2000), and many species of California Current fishes (Hsieh *et al.*, 2006). For long-lived species, reproduction over a span of many years is considered a bet-hedging strategy that has a buffering effect at the population level, increasing the likelihood of some successful reproduction over a period of variable environmental conditions (Longhurst, 2002). When reproductive effort is limited to younger ages, this buffering capacity is lost and populations more closely follow short-term fluctuations in the environment (Hsieh *et al.*, 2006).

In summary, it is likely that past overfishing has reduced the abundance of the yelloweye rockfish, canary rockfish and bocaccio DPSs, leading to the current low abundance levels that place their future viability at risk. In addition, it is likely that past overfishing has reduced the proportion of large females in yelloweye rockfish, canary rockfish and bocaccio, harming the productivity of the populations and affecting their ability to recover from current low levels of abundance. Ongoing fisheries also create risks for these DPSs, and are discussed below under the "Inadequacy of Existing Regulations" section.

Disease or Predation

The status report identified predation as a threat to each species (Drake *et al.*, 2010). Rockfish are important prey items of lingcod (Beaudreau and Essington, 2007). Populations of lingcod have been low in the Puget Sound region, but are increasing in recent years (Palsson *et al.*, 2009). Predation by pinnipeds may be locally significant. Four pinniped species are found in the waters of the State of Washington: Harbor seals, California sea lions, Steller sea lions, and northern elephant seals. Harbor seal populations have increased to more than 10,000 (Jeffries *et al.*, 2003). The harbor seal is the only pinniped species that breeds in Washington waters, and is the only pinniped with known haul-out sites in the San Juan Islands (Jeffries *et al.*, 2000). In the Puget Sound region, harbor seals are opportunistic feeders that consume seasonally and locally abundant prey (Olesiuk *et al.*, 1990; London *et al.*, 2001). About 2,000 Steller sea lions occur seasonally in Washington waters, with dozens found in the Puget Sound region, particularly in the San Juan Islands (Palsson *et al.*, 2009). About 8 percent of the Steller sea lion diet is rockfish (Lance and Jeffries, 2007). Though not abundant, their large size and aggregated distribution suggest that their local impact on rockfish could be significant. Fifteen species of marine birds breed along the Washington coast; seven of these have historically been found breeding in the Puget Sound region (Speich and Wahl, 1989). The predominant breeding marine birds in the San Juan Islands are pigeon guillemots, double-crested cormorants, pelagic cormorants, and members of the western gull/glaucous-winged gull complex (Speich and Wahl, 1989). The first three species are locally abundant. Although these avian predators can consume juvenile rockfish, whether they have a significant impact on rockfish populations is unknown.

Rockfish are susceptible to diseases and parasites (Love *et al.*, 2002), but the extent and population consequences of disease and parasite impacts on the yelloweye rockfish, canary rockfish and bocaccio DPSs are not known. Palsson *et al.* (2009) suggest that stress associated with poor water quality may exacerbate the incidence and severity of naturally occurring diseases to the point of directly or indirectly decreasing survivorship of rockfish.

The Inadequacy of Existing Regulatory Mechanisms

Sport and Commercial Fishing Regulations

Significant efforts to protect rockfish in the Puget Sound region from overharvest began in 1982 when the Washington Department of Fisheries

(now the WDFW) published the Puget Sound Groundfish Management Plan. This plan identified rockfish as an important commercial and recreational resource in the Sound and established acceptable biological catch levels to control harvest (Palsson *et al.*, 2009). The acceptable biological catch levels were based on recent average catches and initially set at 304,360 kg (671,000 total pounds) of rockfish for the Puget Sound region. This plan emphasized recreational fisheries for rockfish while limiting the degree of commercial fishing. During the 1980s, the WDFW continued to collect information on rockfish harvest with an emphasis on increasing the amount of information available on rockfish bycatch in non-targeted fisheries (e.g., salmon fishery). In response to a reduction in catches, rockfish recreational harvest limits were reduced from 15 fish to 10 fish in North Puget Sound and to 5 fish in South Puget Sound in 1983. The 1982 Groundfish Management Plan was updated in 1986 and extended the preference for recreational fisheries over commercial fishing for rockfish to the San Juan Islands and the Strait of Juan de Fuca (Palsson *et al.*, 2009). During this same time, the WDFW received a Federal grant to monitor recreational catches of rockfish and collect biological data on rockfish populations in the Sound. Information was collected, and new management scenarios for rockfish were developed but never implemented. In 1991, the WDFW adopted a significant change in strategy for rockfish management in Puget Sound. The strategy, called "passive management," ended all monitoring of commercial fisheries for groundfish and collection of biological data and increased their reliance on anecdotal information (Palsson *et al.*, 2009). The switch in strategy was at least partially due to the closing by the State legislature of commercial bottom fishing in Puget Sound south of Foulweather Bluff. The termination of monitoring created a data gap in rockfish biological data for the 1990s. In 1994, the recreational daily bag limit for rockfish was reduced to five fish in North Puget Sound and three fish in South Puget Sound. In addition, the WDFW adopted regulations to close remaining trawl fisheries in Admiralty Inlet. In 1996, the Washington State Fish and Wildlife Commission established a new policy for Puget Sound groundfish management. The policy stated that the commission would manage Puget Sound groundfish in a conservative manner in order to minimize the risk of overharvest and to ensure the long-term health of the resource. During the next two years, the WDFW developed a groundfish management plan (Palsson *et al.*, 1998) that identified specific goals and objectives to achieve the commission's precautionary approach (Palsson *et al.*, 2009). The plan also called for the development of species-specific (including many rockfishes) conservation and use plans. The WDFW is currently developing a Rockfish Conservation Plan, which is designed as a comprehensive management plan for all rockfish species within the Puget Sound and Strait of Juan de Fuca regions. The plan provides policy-level directions for future recovery efforts, monitoring, fisheries management, habitat protection and enhancement and research. The plan also notably calls for the designation of rockfish reserves within the region.

In response to dwindling rockfish populations, in 2000, the WDFW established a one rockfish daily bag limit for the entire Puget Sound region, and in 2002 and 2003, prohibited the retention of canary and yelloweye rockfishes. Though these series of bag limit restrictions improved protective efforts for rockfish, they nonetheless were enacted after a large drop in rockfish abundance that occurred prior to the 1980s. In retrospect, they did not prevent the severe reduction of rockfish abundance within the Georgia Basin.

In 2004, the WDFW promulgated additional protective regulations limiting harvest of rockfish to the open salmon and lingcod seasons, prohibiting spearfishing for rockfish east of Sekiu, and only allowing the retention of the first rockfish captured. Monitoring of recreational fisheries has also increased, with estimates of total rockfish catches by boat-based anglers now available. Bycatch and subsequent discarding of rockfish is currently thought to be quite high in the recreational fishery (Palsson *et al.*, 2009). The WDFW reported bycatch rates of greater than 20 percent (20 percent of rockfish caught are released) prior to the 1980s, but in recent years bycatch rates are in excess of 50 percent. The recent increase is likely the outcome of the reduction in the allowable daily catch of rockfish (Palsson *et al.* 2009). Palsson *et al.* (2009) reports that for every rockfish landed in the Puget Sound region, 1.5 are released. From 2004 to 2007 canary and yelloweye rockfish were reported as bycatch in recreational salmon and bottomfish fisheries in each of the major regions of the Puget Sound (WDFW unpublished data). The vast majority of these fish were released, though the mortality levels of these fish were likely high due to barotrauma (Palsson *et al.*, 2009). No bocaccio were reported in the 2004 to 2007 time period (WDFW unpublished data), though a number of rockfish were reported as unknown species. The status report assessed recreational and commercial fisheries as a "high" or "very high" threat to each species (Drake *et al.*, 2010).

Fishers targeting other species of rockfish or other types of popular fishes such as salmon and lingcod are likely to hook the occasional yelloweye rockfish, canary rockfish or bocaccio. This is because all of the aforementioned fishes' distributions overlap within the Georgia Basin. They also consume similar or identical prey items, making them vulnerable to fishing lures or baits imitating these prey items. Although fishers may return rockfish to the water, the mortality rate of these fish is extremely high (Parker *et al.*, 2006). There are some methods available that could lower the mortality rates of discarded rockfish (summarized by Palsson *et al.*, 2009), though application of these methods in the Puget Sound region fishery would be difficult (Palsson *et al.*, 2009). The WDFW considers bycatch of rockfish to be a "high impact stressor" on rockfish populations (Palsson *et al.*, 2009).

Recently the State of Washington adopted regulations that ban the retention of all rockfish species within Marine Catch Areas 6 to 13, which roughly overlap with the rockfish DPSs. In addition, a prohibition of fishing for bottomfish (except halibut) in waters deeper than 120 feet (36.6 m) was adopted. Because most yelloweye rockfish, canary rockfish and bocaccio reside in waters between 40 to 250 meters (Love *et al.*, 2002), the 120-foot rule will likely reduce the numbers of incidentally caught rockfish by fishers targeting bottomfish. Bycatch will still occur in the bottomfish fishery in waters shallower than 120 feet (36.6 m), and in the halibut fishery. Bycatch will also continue to occur in recreational salmon fisheries because anglers targeting salmon are not subject to the 120-foot (36.6 m) depth restriction and also incidentally catch yelloweye rockfish, canary rockfish, and bocaccio. Though the state law requires all rockfish to be released, most are killed by the effects of barotrauma. Thus, bycatch remains an ongoing threat to each species.

Commercial catch data do not include information on bycatch, and there is no effective program to make direct observations of bycatch aboard fishing vessels operating in Puget Sound region. Given the very high mortality rate of discarded rockfish (Parker *et al.*, 2006), and the low resiliency of rockfish populations to exploitation, recent

levels of bycatch are an important threat to yelloweye rockfish, canary rockfish and bocaccio (Drake *et al.*, 2010).

Though there are some marine reserves within the Puget Sound region, as previously discussed, they cover a relatively small area, and not all encompass rockfish habitat. While existing reserves support localized increased biomass of rockfish (Palsson, 2004), they were not established to serve as a regional network and do not alter our conclusions regarding extinction risk for each species.

Tribal Fishing

Several species of rockfish have been historically harvested by Native Americans. Since 1991, rockfishes harvested by tribal fishers have represented less than two percent of the total Puget Sound region rockfish harvest (Palsson *et al.*, 2009). Information from the Northwest Indian Fisheries Commission indicates that total reported rockfish catches by member tribes from 2000 to 2005 ranged between 10.9 and 368 kg (24 and 811 pounds). Tribal regulations in the Puget Sound region vary by tribe from a ban on commercial harvest of rockfish to a 15 fish bag limit for personal use. The currently low rockfish abundance in this area has significantly decreased the interest in harvest of rockfish by tribal fishers (W. Beattie, Northwest Indian Fisheries Commission, personal communication).

Other Natural or Manmade Factors Affecting Its Continued Existence

Rockfishes are known to compete interspecifically for resources (Larson, 1980). Harvey *et al.* (2006) documented the decline of bocaccio in the California Current, and used bioenergetic models to suggest that recovery of coastal populations of bocaccio may be inhibited by other more common rockfishes. In the Puget Sound region, more abundant species such as copper and quillback rockfish likely eat some juvenile yelloweye rockfish, canary rockfish and bocaccio and may compete for food sources. These interactions could limit the ability of the petitioned species to recover.

Chinook and coho salmon consume larval and juvenile rockfish, and they also compete for prey with small size classes of rockfish (Buckley, 1997). Although it is uncertain how detrimental the effect may be, releases of hatchery salmon have the potential to influence the population dynamics of the petitioned species.

Derelict fishing gear can continue "ghost" fishing and is known to kill rockfish (Palsson *et al.*, 2009). There is an ongoing program run by the Northwest Straits Initiative to remove derelict gear throughout the Puget Sound region, mostly concentrated in waters less than 100 feet (33 meters) deep. Nets and other gear in waters deeper than 100 feet have been incidentally encountered in habitat surveys, though the overall extent and impact of nets in deeper waters is unknown. In addition, during removal efforts nets have been documented to drape over slopes deeper than 100 feet, but current guidelines require the net to be cut off at 100 feet. Current guidelines also do not allow "mechanical advantage," such as grappling hooks attached to vessel hydraulic systems, to remove nets that are too entangled in bottom substrate or rock for hand removal. Because habitats deeper than 100 feet are most readily used by adult yelloweye rockfish, canary rockfish and bocaccio, there is an unknown but potentially large impact from deepwater derelict gear on each population within the DPS. Approximately 20 percent of lost nets reported by fishermen are not recovered because the net drifts away and becomes submerged before responders arrive (J. June, Natural Resource Consultants, personal communication, November 2009). There are no devices installed on nets to track their location after they are lost, further complicating the recovery effort.

As previously discussed, climate change could alter habitats within the Georgia Basin. Patterns of circulation and productivity in the Puget Sound region are influenced by climate conditions. Changes in the timing of freshwater input affect stratification and mixing in the Sound, while changes in wind pattern influence the amount of biologically important upwelled water that enters the Strait of Juan de Fuca from the coast (Snover *et al.*, 2005). Direct studies on the effect of climate variability on rockfish are rare, but all the studies performed to date suggest that climate plays an extremely important role in population dynamics (Drake *et al.*, 2010). The negative effect of the warm water conditions associated with El Niño appear to be common across rockfishes (Moser *et al.*, 2000). Field and Ralston (2005) noted that recruitment of all species of rockfish appeared to be correlated at large scales and hypothesized that such synchrony was the result of large-scale climate forcing. Exactly how climate influences the yelloweye rockfish, canary rockfish and bocaccio in the Georgia Basin is unknown; however, Tolimieri and Levin (2005) report that bocaccio recruitment off of California is correlated with specific sets of climate patterns. Given the general importance of climate to the Georgia Basin and to rockfish, it is likely that climate influences the dynamics of each species. Any future changes in climate patterns could affect the ability of yelloweye rockfish, canary rockfish and bocaccio within the Puget Sound/Georgia Basin DPSs to recover.

Efforts Being Made To Protect the Rockfish DPSs

Section 4(b)(1)(A) of the ESA requires the Secretary to make listing determinations solely on the basis of the best scientific and commercial data available after taking into account efforts being made to protect a species. Therefore, in making ESA listing determinations, we first identify factors that have led to a species' decline and assess the level of extinction risk. We then assess efforts being made to protect the species to determine if those measures ameliorate the risks faced by the DPS(s). To do this, we follow the guidance in the joint NMFS—FWS "Policy for Evaluation of Conservation Efforts When Making Listing Decisions" (68 FR 15100, 28 March 2003). This section summarizes the protective efforts described in the proposed rule (FR 18516; April 23, 2009).

Yelloweye rockfish, canary rockfish and bocaccio indirectly benefit from many Federal, state and tribal regulatory and voluntary aquatic habitat improvement programs aimed at other species. Rockfish require water quality that facilitates their growth, movement and reproductive potential. Federal programs carried out under laws such as the Federal Clean Water Act (CWA) of 1972 help to ensure that water quality is maintained or improved and that discharge of fill material into waterways is regulated. Several sections of this law, such as section 404 (discharge of fill into wetlands), section 402 (discharge of pollutants into water bodies), and section 404(d) (designation of water quality limited areas), regulate activities that might degrade rockfish habitat. Although programs carried out under the CWA are well funded and enforcement of this law occurs, the Puget Sound region nonetheless continues to receive daily input of water quality pollutants from a variety of sources (PSP, 2010). The Washington State Department of Ecology (Ecology) estimates that Puget Sound receives between 14 and 94 million pounds of toxic pollutants per year, which include oil and grease, PCBs, phthalates, PBDEs, and heavy metals that include zinc, copper and lead (Ecology 2010). This level of pollutant loading has been documented to bioaccumulate in many

fishes and marine mammals in the Puget Sound (Collier *et al.*, 2007). Forecasted population growth are likely to exacerbate these toxic inputs (Collier *et al.*, 2007). This indicates that although current programs provide some protection, they are not sufficient to fully protect rockfish habitat.

Section 10 of the Rivers and Harbors Act prohibits placement of any structure in any navigable waterway of the United States without approval from the Army Corps of Engineers. Most or all rockfish habitat in the United States is considered to be navigable, and it is not expected that any major obstructions to migration would be constructed within their range.

The Coastal Zone Management Act and Coastal Zone Act Reauthorization Amendments of 1990 encourage states and tribes to preserve, protect, develop, and where possible, restore or enhance valuable natural coastal resources such as wetlands, floodplains, estuaries, beaches, dunes, barrier islands, and coral reefs, as well as the fish and wildlife using those habitats. Despite these provisions, the status of rockfishes and other species continues to decline.

In the Puget Sound region and elsewhere along the west coast, governments and non-governmental organizations are working to restore depressed salmon stocks. Rockfish in the Puget Sound region benefit from these efforts indirectly, primarily through improved water quality in streams that flow into the Puget Sound region. As part of these efforts, the State of Washington established the Puget Sound Partnership in 2007, a new agency consisting of an executive director, an ecosystem coordination board, and a Puget Sound science panel. The Partnership was created to oversee the restoration of the environmental health of Puget Sound by 2020, and in 2008 created a long-term plan called the 2020 Action Agenda (PSP, 2010).

Throughout the Puget Sound/Georgia Basin DPS, an array of Federal, State, tribal, and local entities carry out aquatic habitat restoration programs. These programs are generally intended to benefit other fish species such as salmon, but rockfish may also benefit from some projects, particularly those that occur within the nearshore environment (which could benefit juvenile rockfishes). Although these programs are too numerous to list individually, they include the Pacific Coast Salmon Recovery Fund and the Northwest Straits Commission, which organizes removal of derelict fishing gear.

Though these existing efforts and programs do ameliorate some risks to yelloweye rockfish, canary rockfish and bocaccio, their cumulative impacts are not sufficient to ensure survival and recovery of each species within the range of the Puget Sound/Georgia Basin DPSs (74 FR 18516; April 23, 2009).

Final Listing Determination

Section 4(b)(1) of the ESA requires that the listing determination be based solely on the best scientific and commercial data available, after conducting a review of the status of the species and after taking into account those efforts, if any, being made by any state or foreign nation to protect and conserve the species. We have reviewed the petition, the draft and final reports of the BRT (Drake *et al.*, 2008; 2010), co-manager comments, peer review comments, public comments and other available published and unpublished information, and we have consulted with species experts and other individuals familiar with yelloweye rockfish, canary rockfish and bocaccio.

For the reasons stated above, and as summarized below, we conclude: (1) Yelloweye rockfish, canary rockfish and bocaccio inhabiting the Georgia Basin based on marked separation meet the discreteness and significance criteria for DPSs; (2) Georgia Basin bocaccio are in danger of extinction throughout their range; and (3) Georgia Basin canary rockfish and yelloweye rockfish are likely to become endangered throughout their ranges in the foreseeable future.

Bocaccio occurring in the Georgia Basin are discrete from other members of their species based on marked separation evidenced by the following: (1) Bocaccio exhibit similar larval and juvenile life history as all other rockfish species that demonstrate significant genetic differences between populations inhabiting coastal waters and inland marine waters of the Pacific Northwest; (2) the differences in age structure between coastal and inland stocks indicates that the two are demographically independent; and (3) given the unique habitat conditions and retentive circulation patterns of Puget Sound, a significant fraction of larvae released by bocaccio (especially the more inland portions of the Sound), could be retained within the Sound.

Yelloweye rockfish occurring in the Georgia Basin are discrete from other members of their species based on the following: (1) All other rockfish species for which genetic information are available have significant genetic differences between populations inhabiting coastal waters and inland marine waters of the Pacific Northwest. Similarly, information from yelloweye rockfish studies show genetic differences between rockfish inhabiting coastal waters and inland marine waters of Vancouver Island; (2) yelloweye rockfish generally remain sedentary as adults, limiting gene flow between populations and regions; and (3) given the unique habitat conditions and retentive circulation patterns of Puget Sound, a significant fraction of larvae released by yelloweye rockfish (especially the more inland portions of the Sound), could be retained within the Sound.

Canary rockfish occurring in the Georgia Basin are discrete from other members of their species based on the following: (1) Canary rockfish exhibit similar larval and juvenile life histories as all other rockfish species that demonstrate significant genetic differences between populations inhabiting coastal waters and inland marine waters of the Pacific Northwest; and (2) given the unique habitat conditions and retentive circulation patterns of Puget Sound, a significant fraction of larvae released by canary rockfish (especially the more inland portions of the Sound), could be retained within the Sound.

These DPSs meet the significance criterion because they occupy the unique ecological setting of the Georgia Basin. The current patterns of the inland marine waters, interactions between fresh and saltwater, the protection afforded by the land features of the Olympic Peninsula and Vancouver Island, and sill-dominated bathymetry make the Georgia Basin different from other coastal areas occupied by these species and likely lead to unique adaptations in these species.

Some ongoing efforts to protect Pacific salmonids, as described in the previous section, are likely to also benefit these rockfish species. However, these efforts do not comprehensively address the threats from degradation of benthic and nearshore habitats, fishery bycatch and degraded water quality.

Based on the best scientific and commercial information available, including the preliminary and final BRT reports, we have determined that the Puget Sound/Georgia Basin DPS of bocaccio is currently in danger of extinction throughout all of its range. Factors supporting this conclusion include: (1) Reduced abundance, to the point where the species is undetected in recent fishery surveys, thus raising concerns about successful reproduction and persistence; (2) infrequent recruitment events dependent on rare weather and ocean conditions; (3) high susceptibility to overfishing; (4) high mortality rate associated with any incidental capture in fisheries, despite

improvements (summarized in the previous sections) in current recreational fishing regulations; and (5) exposure to degraded water quality and other habitat perturbations within the Georgia Basin. Therefore, we are listing the Puget Sound/Georgia Basin DPS of bocaccio as endangered.

We have determined that the Puget Sound/Georgia Basin DPSs of canary and yelloweye rockfish are not presently in danger of extinction, but are likely to become so in the foreseeable future throughout all of their range. Factors supporting a conclusion that these DPSs are not presently in danger of extinction include: (1) These DPSs' abundances have been greatly reduced from historic levels, but fish are still present in significant enough numbers to be caught in recreational fisheries and research trawls; (2) large female members of these species are highly fecund and, if allowed to survive and reproduce successfully, can produce large numbers of offspring; and (3) the WDFW fishing regulations reduce potential for bycatch associated with bottomfishing. Factors supporting a conclusion that these DPSs are likely to become in danger of extinction in the foreseeable future include: (1) These DPSs' abundances have greatly decreased from historic levels and abundance trends are negative; (2) individuals of these species appear to be absent in areas where they were formerly abundant; (3) although these species were formerly abundant in the catch, they are less frequent now; (4) although current recreational fishing regulations have been changed to offer more protection to these DPSs, they are still vulnerable to being hooked in fisheries in the Georgia Basin and often die after release, further reducing population productivity and abundance; and (5) current protective measures for habitat in the Puget Sound region are not yet sufficient to ameliorate the threats to these species as evidenced by continuing water quality and nearshore and benthic habitat degradation. We are therefore listing the Puget Sound/Georgia Basin DPSs of yelloweye and canary rockfish as threatened.

Prohibitions and Protective Measures

Section 9 of the ESA prohibits the take of endangered species. The term "take" means to harass, harm, pursue, hunt, shoot, wound, kill, trap, capture, or collect, or to attempt to engage in any such conduct (16 U.S.C. 1532(19)). Take of Puget Sound/Georgia Basin DPS of bocaccio would be prohibited when this listing takes effect (see DATES section).

In the case of threatened species, ESA section 4(d) leaves it to the Secretary's discretion whether, and to what extent, extend the section 9(a) "take" prohibitions to the species, and authorizes us to issue regulations necessary and advisable for the conservation of the species. Thus, we have flexibility under section 4(d) to tailor protective regulations, taking into account the effectiveness of available conservation measures. The 4(d) protective regulations may prohibit, with respect to threatened species, some or all of the acts which section 9(a) of the ESA prohibits with respect to endangered species. These 9(a) prohibitions apply to all individuals, organizations, and agencies subject to U.S. jurisdiction. We will evaluate protective regulations pursuant to section 4(d) for the DPSs of yelloweye and canary rockfish, and issue proposed regulations in forthcoming rules that will be published in the **Federal Register.**

Section 7(a)(2) of the ESA requires Federal agencies to confer with us on actions likely to jeopardize the continued existence of species proposed for listing or result in the destruction or adverse modification of proposed critical habitat. Once a species is listed as threatened or endangered, section 7(a)(2) requires Federal agencies to ensure that any actions they fund, authorize, or carry out do not jeopardize the continued existence of the species. Once critical habitat is designated, section 7(a)(2) also requires Federal agencies to ensure that they do not fund, authorize, or carry out any actions that are likely to destroy or adversely modify that habitat. Our section 7 regulations require the responsible Federal agency to initiate formal consultation if a Federal action may affect a listed species or its critical habitat (50 CFR 402.14(a)). Examples of Federal actions that may affect the yelloweye rockfish, canary rockfish and bocaccio DPSs include shoreline development, cable laying, tidal energy projects, dredging, dredge disposal, point and non-point source discharge of persistent contaminants, adoption of water quality standards, regulation of newly emerging chemical contaminants, research and monitoring, and fishery harvest and management practices.

Sections 10(a)(1)(A) and (B) of the ESA provide us with authority to grant exceptions to the ESA's Section 9 "take" prohibitions. Section 10(a)(1)(A) scientific research and enhancement permits may be issued to entities (Federal and non-Federal) for scientific purposes or to enhance the propagation or survival of a listed species. The type of activities potentially requiring a section 10(a)(1)(A) research/enhancement permit include scientific research that targets yelloweye rockfish, canary rockfish or bocaccio.

Section 10(a)(1)(B) incidental take permits may be issued to non-Federal entities performing activities that may incidentally take listed species, as long as the taking is incidental to, and not the purpose of, the carrying out of an otherwise lawful activity.

Effective Date of the Final Listing Determination

We recognize that numerous parties may be affected by the listing of the Puget Sound/Georgia Basin DPSs of yelloweye rockfish, canary rockfish, and bocaccio. To permit an orderly implementation of the consultation requirements applicable to threatened and endangered species, the final listing will take effect on July 27, 2010.

Critical Habitat

Section 3(5)(A) of the ESA defines critical habitat as "(i) the specific areas within the geographical area occupied by the species, at the time it is listed * * * on which are found those physical or biological features (I) essential to the conservation of the species and (II) which may require special management considerations or protection; and (ii) specific areas outside the geographical area occupied by the species at the time it is listed * * * upon a determination by the Secretary that such areas are essential for the conservation of the species."

Section 4(a)(3) of the ESA requires that, to the extent practicable and determinable, critical habitat be designated concurrently with the listing of a species. Designation of critical habitat must be based on the best scientific data available and must take into consideration the economic, national security, and other relevant impacts of specifying any particular area as critical habitat.

In determining what areas qualify as critical habitat, 50 CFR 424.12(b) requires that we consider those physical or biological features that are essential to the conservation of a given species including "space for individual and population growth and for normal behavior; food, water, air, light, minerals, or other nutritional or physiological requirements; cover or shelter; sites for breeding, reproduction, and rearing of offspring; and habitats that are protected from disturbance or are representative of the historical geographical and ecological distribution of a species." The regulations further direct NMFS to "focus on the principal biological or physical constituent elements * * * that are essential to the conservation of the species," and specify

that the "Known primary constituent elements shall be listed with the critical habitat description." The regulations identify physical and biological features as including, but not limited to: "Roost sites, nesting grounds, spawning sites, feeding sites, seasonal wetland or dry land, water quality or quantity, host species or plant pollinator, geological formation, vegetation type, tide, and specific soil types."

In our proposal to list yelloweye rockfish, canary rockfish and bocaccio, we requested information on the identification of specific areas that meet the definition of critical habitat defined above. We also solicited biological and economic information relevant to making a critical habitat designation for each species. We have reviewed the comments provided and the best available scientific information. We conclude that critical habitat is not determinable at this time for the following reasons: (1) Information is not currently available to assess impacts of designation, (2) information is not currently available regarding the physical and biological features essential to conservation.

Classification

National Environmental Policy Act (NEPA)

ESA listing decisions are exempt from the requirements to prepare an environmental assessment or environmental impact statement under the NEPA (*see* NOAA Administrative Order 216–6.03(e)(1) and *Pacific Legal Foundation* v. *Andrus,* 657 F. 2d 829 (6th Cir. 1981)). Thus, we have determined that this final listing determination for the Puget Sound/Georgia Basin DPSs of yelloweye rockfish, canary rockfish, and bocaccio is exempt from the requirements of NEPA.

Executive Order (E.O.) 12866, Regulatory Flexibility Act and Paperwork Reduction Act

As noted in the Conference Report on the 1982 amendments to the ESA, economic impacts cannot be considered when assessing the status of a species. Therefore, the economic analysis requirements of the Regulatory Flexibility Act are not applicable to the listing process. In addition, this final rule is exempt from review under E.O. 12866. This final rule does not contain a collection-of-information requirement for the purposes of the Paperwork Reduction Act.

E.O. 13084—Consultation and Coordination With Indian Tribal Governments

E.O. 13084 requires that if NMFS issues a regulation that significantly or uniquely affects the communities of Indian tribal governments and imposes substantial direct compliance costs on those communities, NMFS must consult with those governments or the Federal government must provide the funds necessary to pay the direct compliance costs incurred by the tribal governments. This final rule does not impose substantial direct compliance costs on Indian tribal governments or communities. Accordingly, the requirements of section 3(b) of E.O. 13084 do not apply to this final rule. Nonetheless, we will continue to inform potentially affected tribal governments, solicit their input, and coordinate on future management actions.

E.O. 13132—Federalism

E.O. 13132 requires agencies to take into account any federalism impacts of regulations under development. It includes specific directives for consultation in situations where a regulation will preempt state law or impose substantial direct compliance costs on state and local governments (unless required by statute). Neither of those circumstances is applicable to this final rule. In keeping with the intent of the Administration and Congress to provide continuing and meaningful dialogue on issues of mutual state and Federal interest, the proposed rule (74 FR 18516, April 23, 2009) was provided to the relevant state agencies in each state in which the species is believed to occur, and these agencies were invited to comment. We have conferred with the State of Washington and their comments and recommendations have been considered and incorporated into this final determination where applicable.

References

A list of references cited in this document is available upon request (*see* **ADDRESSES**) or via the Internet at *http://www.nwr.noaa.gov*. Additional information, including agency reports and written comments, is also available at this Internet address.

List of Subjects

50 CFR Part 223

Endangered and threatened species, Exports, Imports, Transportation.

50 CFR Part 224

Endangered and threatened species, Exports, Reporting and recordkeeping requirements.

Dated: April 23, 2010.

Samuel D. Rauch III,

Deputy Assistant Administrator for Regulatory Programs, National Marine Fisheries Service.

■ For the reasons set out in the preamble, 50 CFR part 223 is amended as follows:

PART 223—THREATENED MARINEAND ANADROMOUS SPECIES

■ 1. The authority citation for part 223 continues to read as follows:

Authority: 16 U.S.C. 1531 1543; subpart B, § 223.201–202 also issued under 16 U.S.C. 1361 *et seq.*; 16 U.S.C. 5503(d) for § 223.206(d)(9) *et seq.*

■ 2. In § 223.102, in the table, amend paragraph (c) by adding paragraphs (c)(26)), and (c)(27) to read as follows:

§ 223.102 Enumeration of threatened marine and anadromous species.

* * * * *

Species [1]		Where listed	Citation(s) for listing determination(s)	Citation(s) for critical habitat designation(s)
Common name	Scientific name			
*	* *	*	* *	*
(c) * * *	.....	.....	.....	
(26) Rockfish, Yelloweye—Puget Sound/Georgia Basin DPS.	*Sebastes ruberrimus*	U.S.A.-Washington, and British Columbia, including Puget Sound and Georgia Basin.	[*Insert FEDERAL REGISTER page and date citation*].	[*Insert FEDERAL REGISTER page and date citation*].
(27) Rockfish, Canary—Puget Sound/Georgia Basin DPS.	*Sebastes pinniger*	U.S.A.-Washington, and British Columbia, including Puget Sound and Georgia Basin.	[*Insert FEDERAL REGISTER page and date citation*].	[*Insert FEDERAL REGISTER page and date citation*].

Species [1]		Where listed	Citation(s) for listing determination(s)	Citation(s) for critical habitat designation(s)
Common name	Scientific name			
*	*	*	*	*

PART 224—ENDANGERED MARINE AND ANADROMOUS SPECIES

■ 3. The authority citation for part 224 continues to read as follows:

Authority: 16 U.S.C. 1531–1543 and 16 U.S.C. 1361 *et seq.*

■ 4. Amend the table in § 224.101(a), by adding an entry for "Puget Sound/Georgia Basin- Bocaccio" at the end to read as follows:

§ 224.101 Enumeration of endangered marine and anadromous species.

* * * * *

(a) * * *

Species [1]		Where listed	Citation(s) for listing determination(s)	Citation(s) for critical habitat designation(s)
Common name	Scientific name			
*	*	*	*	*
Puget Sound/Georgia Basin DPS—Bocaccio.	*Sebastes paucispinis*	U.S.A., Washington, and British Columbia, including Puget Sound and Georgia Basin.	[*Insert FEDERAL REGISTER page and date citation*].	[*Insert FEDERAL REGISTER page and date citation*].

* * * * *

[FR Doc. 2010–9847 Filed 4–27–10; 8:45 am]

BILLING CODE 3510–22–P

Proposed Rules

Federal Register
Vol. 75, No. 81
Wednesday, April 28, 2010

This section of the FEDERAL REGISTER contains notices to the public of the proposed issuance of rules and regulations. The purpose of these notices is to give interested persons an opportunity to participate in the rule making prior to the adoption of the final rules.

CONSUMER PRODUCT SAFETY COMMISSION

16 CFR Part 1217

[No. CPSC–2010–0022]

RIN 3041–AC79

Safety Standard for Toddler Beds

AGENCY: Consumer Product Safety Commission.

ACTION: Proposed rule.

SUMMARY: Section 104(b) of the Consumer Product Safety Improvement Act of 2008 (“CPSIA”) requires the United States Consumer Product Safety Commission (“Commission,” “CPSC”) to promulgate consumer product safety standards for durable infant or toddler products. These standards are to be “substantially the same as” applicable voluntary standards or more stringent than the voluntary standard if the Commission concludes that more stringent requirements would further reduce the risk of injury associated with the product. The Commission is proposing a safety standard for toddler beds in response to the direction under section 104(b) of the CPSIA. The proposed safety standard would address entrapment in bed end structures, entrapment between the guardrail and side rail, entrapment in the mattress support system, and component failures of the bed support system and guardrails. The proposed standard also addresses corner post extensions that can catch items worn by a child.

DATES: Submit comments by July 12, 2010.

Submit comments relating to the instructional literature and bed and carton marking required by the proposed rule, as these materials relate to the Paperwork Reduction Act, by May 28, 2010.

ADDRESSES: Comments relating to the instructional literature and bed and carton marking required by the proposed rule relating to the Paperwork Reduction Act should be directed to the Office of Information and Regulatory Affairs, OMB, Attn: CPSC Desk Officer, FAX: 202–395–6974, or e-mailed to *oira_submission@omb.eop.gov.*

Other comments, identified by Docket No. CPSC–2010–0022, may be submitted by any of the following methods:

1. *Electronic Submissions.* Submit electronic comments to the Federal eRulemaking Portal: *http://www.regulations.gov.* Follow the instructions for submitting comments. (To ensure timely processing of comments, the Commission is no longer directly accepting comments submitted by electronic mail (e-mail). The Commission encourages you to submit electronic comments by using the Federal eRulemaking Portal, as described above.)

2. *Written Submissions.* Submit written submissions in the following ways:

a. *Fax:* 301–504–0127.

b. *Mail/Hand delivery/Courier* (for paper, disk, or CD–ROM submissions): Office of the Secretary, Consumer Product Safety Commission, Room 820, 4330 East West Highway, Bethesda, MD 20814.

Instructions: All submissions received must include the agency name and docket number for this rulemaking. All comments received, including any personal information provided, may be posted without change to *http://frwebgate.access.gpo.gov/cgi-bin/leaving.cgi?from=leavingFR.html&log=linklog&to=http://www.regulations.gov.* Accordingly, we recommend that you not submit confidential business information, trade secret information, or other sensitive information that you do not want to be available to the public.

Docket: For access to the docket to read background documents or comments received, go to *http://www.regulations.gov* and insert the docket number, CPSC 2010–0022, into the “Search” box and follow the prompts.

FOR FURTHER INFORMATION CONTACT: *Technical information:* Celestine Kiss, Division of Human Factors, Directorate for Engineering Sciences, Consumer Product Safety Commission, 4330 East West Highway, Bethesda, MD 20814; telephone (301)504–7739, e-mail *ckiss@cpsc.gov. Legal information:* Harleigh Ewell, Office of the General Counsel, Consumer Product Safety Commission, 4330 East West Highway, Bethesda, MD 20814; telephone (301)504–7683; e-mail *hewell@cpsc.gov.*

SUPPLEMENTARY INFORMATION:

A. Background—The Consumer Product Safety Improvement Act as Applied to Durable Infant or Toddler Products

The Consumer Product Safety Improvement Act of 2008 (“CPSIA,” Pub. L. 110–314) was enacted on August 14, 2008. Section 104(b) of the CPSIA requires the Commission to promulgate consumer product safety standards for durable infant or toddler products. These standards are to be “substantially the same as” applicable voluntary standards or more stringent than the voluntary standard if the Commission concludes that more stringent requirements would further reduce the risk of injury associated with the product. The term “durable infant or toddler product” is defined in section 104(f) of the CPSIA as a durable product intended for use, or that may be reasonably expected to be used, by children under the age of 5 years. Toddler beds are one of the products specifically identified in section 104(f)(2) of the CPSIA as a durable infant or toddler product.

In this document, the Commission proposes a safety standard for toddler beds. The proposed standard is largely the same as a voluntary standard developed by ASTM International (formerly the American Society for Testing and Materials), ASTM F 1821–09 *Standard Consumer Safety Specification for Toddler Beds,* but with several modifications that strengthen the standard. The ASTM standard is copyrighted, but can be viewed as a read-only document, only during the comment period on this proposal, at *http://www.astm.org/cpsc.htm,* by permission of ASTM. Documents that support statements in this notice are identified by [Ref. #], where # is the number of the reference document as listed below in section M of this notice.

B. The Product

The ASTM voluntary standard defines a toddler bed as any bed sized to accommodate a full-size crib mattress having minimum dimensions of 51⅝ inches in length and 27¼ inches in width and that is intended to provide free access and egress to a child not less

than 15 months of age and weighing no more than 50 pounds.

C. Incident Data [Ref. 2]

1. *Introduction.* CPSC databases did not have a dedicated product code for identifying incidents before 2005 that involved toddler beds. Accordingly, the data discussed below begins with the year 2005. The data come from two databases: (1) Actual injuries and fatalities of which the Commission is aware; and (2) estimates derived from reports of emergency-room treatment in a statistical sample of hospitals that makes up the National Electronic Injury Surveillance System ("NEISS"). The CPSC staff is aware of 4 fatalities and 81 nonfatal incidents (with and without injuries) related to toddler beds that were reported to have occurred since 2005.

2. *Fatalities.* Of the four fatalities reported to CPSC staff, two resulted from entrapments. The first death was the result of a 6-month-old infant getting entrapped in the footboard while sleeping on a toddler bed. The second death involved a 13-month-old getting entrapped in the side rail of a flipped-over toddler bed while playing with an older sibling. The third death was due to asphyxiation when a 10-month-old was napping in an inflatable children's bed. (Although an inflatable children's bed does not meet the definition of a toddler bed that is in ASTM F 1821–09, this incident was coded as associated with a toddler bed.) The last fatality was a strangulation death of a 3-year-old on the cord of mini blinds located over his toddler bed. (The ASTM F 1821–09 standard addresses this hazard with a warning label. The Commission does not have information indicating whether the toddler bed involved in this death bore such a warning label.) It is notable that three of the four reported fatalities involved victims under the age of 15 months, which is recommended in the current ASTM voluntary standard as the minimum age for use of a toddler bed. The ASTM standard requires a label warning against using the bed with children under 15 months.

3. *Nonfatal Incidents.* Of the 81 nonfatal incidents known to the CPSC staff that were associated with a child on a toddler bed, 26 involved injuries. Three of the injuries were fractures of limbs. The vast majority of the injuries were bumps and bruises. Sprains, scrapes, and lacerations were some of the other reported injuries associated with toddler beds.

Listed below are the hazard patterns identified among the reports of nonfatal incidents:

- Entrapment was the most commonly reported hazard. Approximately 31 percent of the incidents involved entrapment of a limb. The associated injuries, if any, ranged from fractures to sprains to bruises. More serious, potentially fatal, entrapments of head or body in the side rails, in the mesh covering of the side rails, or between the mattress-support rails were reported in 14 percent of the incidents.
- Broken, loose, or detached components of the bed, such as the guardrail, hardware, or other accessories, were the next most commonly reported problems. However, only two injuries—one laceration and one ingestion—resulted from these problems.
- Product integrity issues, mostly integrity of the mattress-support, were the next most commonly encountered hazard. These often resulted in the collapse of the bed, causing the child to fall through.
- Inadequate mattress-fit issues were the next most common hazard. A few children suffered sprains and broken limbs from being caught in the gap between the mattress and the bed frame.
- Finally, there were some complaints of paint/coating issues, bed height/clearance issues, and inadequacy of guardrails, assembly instructions, and recalls.

Among the nonfatal incidents that reported the child's age (67 out of 81), the age ranged between 11 months to 6 years. Nearly 66 percent of these incidents reported the age to be between 15 and 24 months. About 16 percent of the incidents involved children less than 15 months of age. However, it was not always clear that the reported age pertained to the child who was the regular user of the toddler bed. Three of the 81 nonfatal incident reports involved inflatable children's beds, which do not conform to the ASTM definition of toddler beds and are not included within the scope of the proposed standard.

4. *National Injury Estimates.* There were an estimated 1,380 injuries related to toddler beds that were treated in hospital emergency departments in the United States over the 4-year period from 2005 to 2008. The injury estimates for individual years are not reportable because the numbers each year fail to meet NEISS's publication criteria. There was no statistically significant increase or decrease observed in the estimated injuries from one year to the next, and there was no statistically significant trend observed over the 2005–2008 period. No deaths were reported through NEISS. For the emergency department-treated injuries related to toddler beds, the following characteristics occurred most frequently:

- Hazard—falls out of the toddler bed to a lower level (87%).
- Injured body part—head (30%) and face (24%).
- Injury type—lacerations (26%) and contusions/abrasions (20%).
- Disposition—treated and released (nearly 100%).

The age of patients in these injuries ranged between 4 months and 6 years, with nearly 53 percent between 18 months and 2 years. It was not always clear whether the patient injured was the usual user of the toddler bed.

D. The ASTM Voluntary Standard

The ASTM F 1821–09 voluntary standard contains requirements addressing a number of hazards. The requirements include:

1. Toddler beds must comply with CPSC's regulations at 16 CFR part 1303 (ban of lead in paint), 1500.48 (sharp points), 1500.49 (sharp edges), 1500.50 through 1500.53 (use and abuse tests), and part 1501 (small parts that present choking, aspiration, or ingestion hazards), both before and after the product is tested according to the standard.

2. Toddler beds must not present scissoring, shearing, or pinching hazards.

3. Openings must meet specified dimensions in order to prevent finger entrapment.

4. Openings that will permit passage of a specified block with a wedge on one end are prohibited in order to protect against torso entrapment.

5. The distance that corner posts may extend above the upper edge of an end or side panel is limited.

6. Protective components shall not be removable with a specified force after torque and tension tests.

7. There are requirements for marking and labeling each bed and its retail carton, and for warning statements on the bed. There are requirements for the permanency of labels and warnings.

8. The mattress shall be supported and contained so that it does not move horizontally to cause a horizontal opening that will allow the passage of the wedge block when tested.

9. There are tests for the physical integrity of the mattress support system and its attachments and the side rails.

10. There are wedge block tests for openings in the guardrails and end structures that could cause entrapment.

11. There is a probe test to protect against entrapment in partially-bounded openings in the bed.

12. Instructions must be provided with the bed.

13. Warning statements are required on the bed to address entrapment and strangulation hazards.

E. Description of the Proposed Rule and Its Changes to the ASTM Standard

Due to the significant number of incidents reported regarding component failures of bed support systems and guardrails, the Commission's staff has recommended additional testing requirements to address those types of incidents. Accordingly, the Commission proposes a new 16 CFR 1217 that, if finalized, would adopt the ASTM standard F 1821–09 by reference, but with some changes and additions that would strengthen the ASTM standard's provisions.

1. Scope, Application, and Effective Date (Proposed § 1217.1)

Proposed § 1217.1 would state that part 1217 establishes a consumer product safety standard for toddler beds manufactured or imported after a date that would be 6 months after the publication date of a final rule in the **Federal Register**.

2. Requirements for Toddler Beds (Proposed § 1217.2)

a. The Applicable ASTM Standard (Proposed § 1217.2(a))

Proposed § 1217.2(a) would explain that, except as provided in § 1217.2(b), each toddler bed as defined in ASTM F 1821–09, "Standard Consumer Safety Specification for Toddler Beds," must comply with all applicable provisions in ASTM F 1821–09. The proposal also would explain how interested parties may obtain a copy of the ASTM standard or inspect a copy at the CPSC.

b. Minimum Height for the Upper Edge of Guardrails (Proposed § 1217.2(b)(1) Through (3))

Proposed § 1217.2(b)(1) through (3) would revise the ASTM standard to require that guardrails be a minimum height of 5 inches above the manufacturer's recommended sleeping surface. This is intended to help prevent falls. Although the proposed standard does not require guardrails, persons who choose to have guardrails on their toddler beds should be able to rely on the guardrail performing the function of helping to prevent falls. The 5-inch minimum height is widely adopted by industry as a minimum height for guardrails in bunk beds [Ref. 3].

c. Structural Integrity of Guardrails (Proposed § 1217.2(b)(4) and 1217.2(b)(6))

In addition to the already existing test for guardrail openings, the Commission, at proposed § 1217.2(b)(4) and 1217.2(b)(6), would add a test for the overall stability of guardrails using a 50-lb force while the bed is firmly secured. The force is to be applied in the center along the length of the guardrail and then repeated with the force applied directly over each of the outermost legs of the guardrail. This additional test is intended to prevent children from falling out of bed; it is also calculated to ensure that the guardrails remain intact when children lean against them or attempt to use them to climb into bed. The 50-lb force was chosen because that is the maximum weight of a child that should use a toddler bed [Ref. 3]. After testing in accordance with 7.9, the guardrail shall not be broken or detached or create a condition that would present any of the hazards described in section 5. The guardrail also shall not be deformed or displaced so as to create a hazard addressed by the performance requirements of section 6.

d. Slat/Spindle Testing for Guardrails, Side Rails, and End Structures (Proposed § 1217.2(b)(5) and 1217.2(b)(7))

Currently, the torso wedge is used in combination with a 25-pound force ("lbf") on guardrails and end structures in the most adverse orientation to assure that the slats or spindles (hereafter referred to collectively as "slats") do not break and allow an opening in which a child could become entrapped. Proposed § 1217.2(b)(5) and 1217.2(b)(7) would modify the existing ASTM test requirements in the following ways.

First, 25 percent of all slats, rather than just those of the end structures and guardrails, would be tested using 80 lbf instead of 25 lbf. The slats that present the least resistance to bending shall make up the 25 percent, except that when a slat is selected for testing with 80 lbf, neither of its adjacent slats shall be tested at that force. The 80 lbf is chosen on the basis of tests performed by the Commission's staff on 18 cribs or toddler beds that were involved in actual breakage incidents in the field ("incident beds") and on two samples of a model of a crib that has been widely sold to consumers and has not been reported to have been involved in a breakage incident ("the non-incident crib") [Ref. 3].

There is very little anthropometric data available to help determine the forces a child can apply to a bed slat. The tests of the slats of the non-incident crib produced failures of the slats at forces ranging from 85 lb to 123.5 lb [Ref. 3]. Since there have not been any incidents reported for this model crib despite its wide distribution, it is reasonable to conclude that the occupants of this crib can exert a force on the slats that is somewhat less than the minimum failure force of 85 lb obtained for this crib. The 18 incident beds tested had minimum failure forces ranging from 28.8 lb to 78.8 lb [Ref. 3]. Taken together, these two sets of failure forces support setting a maximum test force of 80 lb.

However, when testing the non-incident crib model, the Commission's staff observed that testing adjacent slats significantly compromised the integrity of the bed rails [Ref. 3]. This occurred even at the lower end of the range of failure forces, *i.e.,* 85 to 90 lb. Therefore, it is plausible that testing all slats to 80 lbf would have a similar effect and be too stringent a test. Accordingly, the Commission is proposing that 25 percent of the slats be tested to 80 lbf so that adjacent slats would not have to be tested at that force. The Commission proposes that the remaining 75 percent of slats be tested at 60 lbf. This reduction in force is intended to compensate for any damage to the bed rail caused by testing an adjacent slat to 80 lbf and is a much higher force than the 25 lbf specified in the current ASTM standard. The Commission concludes that the force of 60 lb is adequate for these remaining slats since the slats with geometry that is most likely to bend (and thus break) will have been tested to the full 80 lbf.

e. Improved Warning Label (Proposed § 1217.2(b)(8)) [Ref. 4]

ASTM F 1821–09 is intended to minimize entrapments in bed end structures, between the guardrail and side rail, and in the mattress support system. Entrapment of a child's head or neck can result in asphyxiation. Section 8.4 of ASTM F 1821–09 specifies warning statements to be included on toddler beds. Section 8.4.3 of ASTM F 1821–09 states that the warnings shall include the following label, exactly as stated:

⚠ WARNING ENTRAPMENT/STRANGULATION HAZARD

Infants have died in toddler beds from entrapment and strangulation.
Failure to follow these warnings and the assembly instructions could result in serious injury or death.
NEVER use bed with children under 15 months.
NEVER place bed near windows where cords from blinds or drapes may strangle a child.

Section 8.4.4 of ASTM F 1821–09 specifies additional required warning statements that address the following:

1. The minimum mattress dimensions for use on the bed;
2. The use of provided guardrails to avoid the formation of gaps that could pose an entrapment hazard;
3. The placement of the bed relative to cords from blinds or drapes;
4. The placement of strings, cords, or similar objects around a child's neck; and
5. The suspension of strings over the bed.

Like the warning label specified in section 8.4.3 of ASTM F 1821–09, all of these additional warning statements appear to be intended to address entrapment and strangulation hazards. Proposed § 1217.2(b)(6) would revise these warning requirements to reduce the risk of injury associated with the use of toddler beds.

The Commission's Human Factors staff believes that the warnings section of ASTM F 1821–09 is confusing as it is currently organized, with explicit warning language for only certain information, "additional" warning statements that leave the applicable hazards open to interpretation, and redundancies between these two sets of required warning information [Ref. 4]. The additional warning statements specified in section 8.4.4 of ASTM F 1821–09 apparently address the same hazards addressed by the warning label specified in section 8.4.3 of ASTM F 1821–09. (Section 8.4.4.3 of ASTM F 1821–09 requires an additional warning statement about placing the bed near the cords of blinds and drapes, yet this issue is already addressed explicitly in the warning label specified in 8.4.3 of ASTM F 1821–09.) In addition, the warning label specified in section 8.4.3 of ASTM F 1821–09 merges two distinct hazards into a single label, making it difficult to tell what warning information is associated with each hazard. To address these issues, the Human Factors staff suggested that all of the required warnings specified in section 8.4 of ASTM F 1821–09 be presented as two separate warnings, one addressing the entrapment hazard and the other addressing the strangulation hazard, and proposed § 1217.2(b)(8) reflects the two warnings.

(i) Entrapment warning.

ASTM F 1821–09 specifies different warning requirements for toddler beds that employ a removable guardrail as the mattress containment means. Specifically, section 8.4.4.2 of ASTM F 1821–09 states that toddler beds that employ a removable guardrail for this purpose shall include a warning statement telling consumers that the guardrail must be used to avoid the formation of a gap between the mattress and the bed that could cause entrapment. However, this warning statement would not be needed for toddler beds that did not present an entrapment hazard with the guardrail removed. Thus, the Commission proposes that this warning statement would not be required for toddler beds that meet the performance requirements of sections 5.8.2 (torso entrapment), 6.1 (mattress retention), 6.2 (mattress support system integrity), 6.3 (mattress support system attachment to end structures), 6.4 (mattress support system openings), 6.6 (end structure openings), and 6.7 (partially bounded openings) of ASTM F 1821–09 with the guardrails removed. With this in mind, the Commission proposes two alternative labels that address the entrapment hazard: One for toddler beds with removable guardrails that will not meet these performance requirements with the guardrail removed and one for all other toddler beds.

The entrapment warning for beds with removable guardrails where the beds present an entrapment hazard when the guardrails are removed would read as follows:

⚠WARNING

INFANTS HAVE DIED IN TODDLER BEDS FROM ENTRAPMENT.
Openings in and between bed parts can entrap head and neck of a small child.
NEVER use bed with children younger than 15 months.
ALWAYS use supplied guardrails to avoid gaps between mattress and bed.
ONLY use full-size crib mattress of the recommended size.
ALWAYS follow assembly instructions.

The entrapment warning for all other beds would read as follows:

⚠WARNING

INFANTS HAVE DIED IN TODDLER BEDS FROM ENTRAPMENT.
Openings in and between bed parts can entrap head and neck of a small child.
NEVER use bed with children younger than 15 months.
ONLY use full-size crib mattress of the recommended size.
ALWAYS follow assembly instructions.

These warnings would use the type-size requirements described in the standard, and the safety alert symbol design is consistent with the latest version of ANSI Z535.4 (2007), *American National Standard for Product Safety Signs and Labels.* The primary differences between these proposed warnings and the relevant portions of the current ASTM warnings are the following:

1. The proposed warnings do not state "ENTRAPMENT HAZARD," which would be analogous to the original "ENTRAPMENT/STRANGULATION HAZARD" statement in the original warning;

2. The proposed warning places greater emphasis on the subpopulation most at risk and the hazard consequences;

3. The proposed warning includes a more explicit description of the mechanism that creates the entrapment hazard; and

4. The proposed warning omits the statement in the label in the voluntary standard concerning the possibility of serious injury or death from not following the warnings.

To the CPSC staff's knowledge, the minimum age recommendation of 15 months for toddler beds is based largely on the increased entrapment potential for children younger than this. Thus, the statement that "[i]nfants have died in toddler beds from entrapment and strangulation," which appears in the original warning, has been carried over, with deletion of the reference to the strangulation hazard, to the proposed entrapment warning label as, "Infants have died in toddler beds from entrapment." Given that this statement already explicitly references "entrapment," the CPSC staff concluded that including an initial "ENTRAPMENT HAZARD" statement would introduce unnecessary redundancy. Furthermore, omitting this statement from the warning allows greater emphasis on the consequences of the hazard (death, in this case) and the subpopulation most at risk of dying from exposure to the hazard. This greater emphasis on the consequences of the hazard is done by: (1) Moving the statement, "Infants have died in toddler beds from entrapment," toward the beginning of the warning message; and (2) reformatting this statement in all-uppercase, boldface type. The ASTM F 1821 subcommittee has pointed out that there continue to be incidents with toddler beds involving children younger than the intended age for these products, so emphasizing the at-risk population is important [Ref. 4]. In addition, warnings and persuasion research has found that the degree of seriousness of a perceived threat plays a significant role in whether one complies with a warning, so emphasizing the potential for death would tend to increase the efficacy of a warning [Ref. 4].

The statement in the original warning, "Failure to follow these warnings * * * could result in serious injury or death," is unlikely to have a substantial impact on injuries or warning compliance. The warning already communicates the safety importance of its content via a safety alert symbol, the word "WARNING," and a description of the hazard and its consequences, so telling consumers that not following the warning could result in serious injury or death is redundant at best. In contrast, explicit hazard information in a warning has been found to lead to higher levels of perceived hazardousness and greater intent to comply with the warning. The original warning message did not specify the source of entrapment or how entrapment might lead to death, and it is unclear whether many consumers could readily and correctly infer this information. The sentence, "Openings in and between bed parts can entrap head and neck of a small child," is intended to remedy this situation by providing a more explicit description of the mechanism that creates the hazard. The Commission also is keeping the warning to follow the assembly instructions because consumer misassembly has been a problem with similar products, such as cribs, and could lead to entrapment.

Section 8.4.4.1 of ASTM F 1821–09 states that additional warning statements shall address the minimum mattress size. The language of this section implies that the precise mattress dimensions should be provided, both in English and metric units. Section 8.3.2 of ASTM F 1821–09, however, already specifies that both the bed and its retail carton shall be clearly and legibly marked with the intended mattress for the bed, including the precise dimensions in both English and metric units. The Human Factors staff, therefore, concluded that repeating precise dimensions within the warning is unnecessary and may, by making the warning longer, discourage some consumers from reading it. Therefore, proposed § 1217.2(b)(8) would have the warning label include the statement "ONLY use full-size crib mattress of the recommended size" instead of repeating the dimensions of the recommended mattress.

(ii) *Strangulation warning.*

To address the strangulation hazard, the Commission, at proposed § 1217.2(b)(8), is proposing the following warning label for all toddler beds:

⚠WARNING

STRANGULATION HAZARD

NEVER place bed near windows where cords from blinds or drapes may strangle a child.
NEVER suspend strings over bed.
NEVER place items with a string, cord, or ribbon, such as hood strings or pacifier cords, around a child's neck. These items may catch on bed parts.

Like the proposed entrapment warning labels, this warning would use the type-size requirements described in the standard, and the safety alert symbol design is consistent with ANSI Z535.4–2007, *American National Standard for Product Safety Signs and Labels.* This warning largely reflects all of the information relevant to hazards that was required in the original warnings. A warning statement about not placing items with a string, cord, or ribbon around a child's neck would be more effective with an additional clarifying sentence, "These items may catch on bed parts." Without this sentence, consumers may find it difficult to infer how the presence of a cord around a child's neck is relevant to the toddler bed or how the cord and bed interact to create the potential for strangulation. Concern has been raised about the label statement warning that a string, cord, or ribbon around a child's neck may catch on bed parts. The concern is that the label statement does not point out that strings, cords, or ribbons around a child's neck can catch on many other items as well and that the Commission recommends against the use of such items for children. The Commission invites comments regarding this concern.

F. Effective Date

The Administrative Procedure Act ("APA") generally requires that the effective date of a rule be at least 30 days after publication of the final rule. 5 U.S.C. 553(d). To allow time for toddler beds to come into compliance after the final rule is issued, the Commission proposes that the standard would become effective 6 months after publication of a final rule as to products manufactured or imported on or after that date. The Commission invites comments on how long it would take manufacturers of toddler beds to come into compliance with the rule.

G. Paperwork Reduction Act

This proposed rule contains information collection requirements that are subject to public comment and review by the Office of Management and Budget (OMB) under the Paperwork Reduction Act of 1995 (44 U.S.C. 3501–3520). We describe the provisions in this section of the document with an estimate of the annual reporting burden. Our estimate includes the time for reviewing instructions, searching existing data sources, gathering and maintaining the data needed, and completing and reviewing each collection of information.

We particularly invite comments on: (1) Whether the collection of information is necessary for the proper performance of the CPSC's functions, including whether the information will have practical utility; (2) the accuracy of the CPSC's estimate of the burden of the proposed collection of information, including the validity of the methodology and assumptions used; (3) ways to enhance the quality, utility, and clarity of the information to be collected; and (4) ways to minimize the burden of the collection of information on respondents, including through the use of automated collection techniques, when appropriate, and other forms of information technology.

Title: Safety Standard for Toddler Beds.

Description: The proposed rule would require each toddler bed and convertible crib to comply with ASTM F 1821–09, "Standard Consumer Safety Specification for Toddler Beds." Sections 8 and 9 of ASTM F 1821–09 contain requirements for marking and instructional literature.

Description of Respondents: Persons who manufacture or import toddler beds.

We estimate the burden of this collection of information as follows:

TABLE 1—ESTIMATED ANNUAL REPORTING BURDEN

16 CFR Section	Number of respondents	Frequency of responses	Total Annual responses	Hours per response	Total burden hours
1217.2(a)	44	10	440	0.5	220

There are no capital costs or operating and maintenance costs associated with this collection of information.

Our estimates are based on the following:

Proposed § 1217.2(a) would require each toddler bed and convertible crib to comply with ASTM F 1821–09. Sections 8 and 9 of ASTM F 1821–09 contain requirements for marking and instructional literature that are disclosure requirements, thus falling within the definition of "collections of information" at 5 CFR 1320.3(c).

Section 8.1.1 of ASTM F 1821–09 requires that the name and place of business (city, state, mailing address, including zip code and telephone number) of the manufacturer, importer, distributor, of the manufacturer, distributor, or seller be clearly and legibly marked on each bed and its retail carton. Section 8.1.2 of ASTM F 1821–09 requires that each bed and its retail carton be clearly and legibly marked with the model number, stock number, catalog number, item number, or other symbol expressed numerically or otherwise, such that only articles of identical construction, composition and dimensions bear identical markings and requires the manufacturer to change the model number whenever a significant structural or design modification is made that affects its conformance with this consumer safety specification.

Section 8.1.3 of ASTM F 1821–09 requires a code mark or other means that identifies the date (month and year as a minimum) of manufacture and permits future identification of any given model and that such mark be clearly and legibly marked on each bed and its retail carton.

There are 73 known firms supplying toddler beds to the United States market. Twenty-nine of the 48 firms are known to already produce labels that comply with sections 8.1.1, 8.1.2, and 8.1.3 of the standard, so there would be no additional burden on these firms. The remaining 44 firms are assumed to already use labels on both their products and their packaging, but would need to make some modifications to their existing labels. The estimated time required to make these modification is about 30 minutes per model. Assuming that, on average, each of these firms supplies 10 different models of toddler beds or convertible cribs, the estimated burden hours associated with labels is 30 minutes × 44 firms × 10 models per firm = 13,200 minutes or 220 annual hours.

The Commission estimates that hourly compensation for the time required to create and update labels is $27.78 (Bureau of Labor Statistics, September 2009, all workers, goods-producing industries, Sales and office, Table 9). Therefore, the estimated annual cost associated with the Commission's proposed labeling requirements is approximately $6,112 ($27.78 per hour × 220 hours = $6,111.60, which we have rounded up to $6,112).

Section 9.1 of ASTM F 1821–09 requires instructions, where applicable, for assembly, maintenance, cleaning, folding, and warning information to be supplied with the bed. Toddler beds and convertible cribs are products that generally require some assembly and maintenance, and products sold without such information would not be able to successfully compete with products supplying this information. Under OMB's regulations (5 CFR 1320.3(b)(2)), the time, effort, and financial resources necessary to comply with a collection of information that would be incurred by persons in the "normal course of their activities" are excluded from a burden estimate where an agency demonstrates that the disclosure activities needed to comply are "usual and customary." Therefore, because the CPSC is unaware of toddler beds or convertible cribs that: (a) Generally require some assembly and maintenance, but (b) lack any instructions to the user about these topics, we tentatively estimate that there are no burden hours associated with the instruction requirement in section 9.1 of ASTM F 1821–09. This is because any burden associated with supplying instructions with a toddler bed or convertible crib would be "usual and customary" and not within the definition of "burden" under OMB's regulations.

Based on this analysis, the requirements of the proposed toddler bed rule would impose a burden to industry of 220 hours at a cost of $6,112 annually.

In compliance with the Paperwork Reduction Act of 1995 (44 U.S.C. 3507(d)), we have submitted the information collection requirements of this rule to OMB for review. Interested persons are requested to fax comments regarding this information collection by May 28, 2010, to the Office of Information and Regulatory Affairs, OMB (*see* **ADDRESSES**).

I. Certification

Section 14(a) of the Consumer Product Safety Act ("CPSA") imposes the requirement that products subject to a consumer product safety rule under the CPSA, or to a similar rule, ban, standard, or regulation under any other act enforced by the Commission, must be certified as complying with all applicable CPSC-enforced requirements. 15 U.S.C. 2063(a). Such certification must be based on a test of each product or on a reasonable testing program or, for children's products, on tests on a sufficient number of samples by a third party conformity assessment body accredited by the Commission to test according to the applicable requirements. As discussed above in section H, section 104(b)(1)(B) of the CPSIA refers to standards issued under that section, such as the rule for toddler beds being proposed in this notice, as "consumer product safety standards." Furthermore, the designation as consumer product safety standards subjects such standards to certain sections of the CPSA, such as section 26(a) regarding preemption. By the same reasoning, such standards would also be subject to section 14 of the CPSA. Therefore, any such standard would be considered to be a consumer product safety rule to which products subject to the rule must be certified.

In addition, the CPSIA is another act enforced by the Commission, and the standards issued under section 104(b)(1)(B) of the CPSIA are similar to consumer product safety rules. For this reason also, toddler beds will need to be tested and certified as complying with the safety standard when it becomes effective. Because toddler beds are children's products, they must be tested by a third-party conformity assessment body accredited by the Commission. In the future, the Commission will issue a notice of requirements to explain how laboratories can become accredited as a third party conformity assessment bodies to test to the new safety standard. (Toddler beds also must comply with all other applicable CPSC requirements, such as the lead content and phthalate content requirements in sections 101 and 108 of the CPSIA, the tracking label requirement in section 14(a)(5) of the CPSA, and the consumer registration form requirements in section 104 of the CPSIA.) The Commission seeks comment on what it may cost to comply with all of the CPSC requirements outlined above, including the proposed modifications in section E, and how these costs will impact toddler bed manufacturers.

J. Environmental Considerations

The Commission's environmental review regulation at 16 CFR Part 1021 has established categories of actions that normally have little or no potential to affect the human environment and therefore do not require either an environmental assessment or an environmental impact statement. The proposed rule is within the scope of the Commission's regulation, at 16 CFR 1021.5(c)(1), which provides a categorical exclusion for rules to provide design or performance requirements for products. Thus, no environmental assessment or environmental impact statement for this rule is required.

K. Regulatory Flexibility Analysis

The Regulatory Flexibility Act (RFA), 5 U.S.C. 601–612, requires agencies to consider the impact of proposed rules on small entities, including small businesses. Section 603 of the RFA requires that CPSC staff prepare an initial regulatory flexibility analysis and make it available to the public for comment when the general notice of proposed rulemaking is published. The initial regulatory flexibility analysis must describe the impact of the proposed rule on small entities and identify any alternatives that may reduce the impact. Specifically, the initial regulatory flexibility analysis must contain:

1. A description of and, where feasible, an estimate of the number of small entities to which the proposed rule will apply;

2. A description of the reasons why action by the agency is being considered;

3. A succinct statement of the objectives of, and legal basis for, the proposed rule;

4. A description of the projected reporting, recordkeeping, and other compliance requirements of the proposed rule, including an estimate of the classes of small entities subject to the requirements and the type of professional skills necessary for the preparation of reports or records; and

5. An identification, to the extent possible, of all relevant federal rules that may duplicate, overlap, or conflict with the proposed rule.

In addition, the initial regulatory flexibility analysis must contain a description of any significant alternatives to the proposed rule that would accomplish the stated objectives of the proposed rule while minimizing the economic impact on small entities.

Toddler beds and convertible cribs are typically produced or marketed by juvenile product manufacturers and distributors or by furniture manufacturers and distributors, some of which have separate divisions for juvenile products. The CPSC's staff believes that there are currently at least 73 known manufacturers or importers that supply toddler beds and/or convertible cribs to the United States market. Approximately 48 suppliers are domestic manufacturers (66 percent), 13 are domestic importers (18 percent), 11 are foreign manufacturers (15 percent), and the remaining firm is a foreign supplier who imports from other countries and exports to the United States. (For sources of information used in this initial regulatory flexibility analysis, see Ref. 5.)

Under Small Business Administration (SBA) guidelines, a manufacturer of toddler beds or convertible cribs is small if it has 500 or fewer employees and an importer is small if it has 100 or fewer employees. Based on these guidelines, 11 of the domestic importers and 34 domestic manufacturers known to be supplying the United States market are small. (Six of these small domestic manufacturers have between 100 and 500 employees.) There are an additional eight domestic manufacturers of unknown size, most of which are likely to be small as well. (In fact, there was sufficient information to include seven of these firms as small in the analysis that follows.) However, there are probably additional unknown small manufacturers and importers operating in the United States market as well.

The Juvenile Products Manufacturers Association (JPMA), the major United States trade association that represents juvenile product manufacturers and importers, runs a voluntary Certification Program for several juvenile products. Approximately 29 firms that supply toddler beds and/or convertible cribs to the United States market are compliant with the current ASTM voluntary standard (40 percent). (Twenty-six of these firms are JPMA-certified as compliant, while an additional three firms claim compliance. Of the small domestic businesses, 11 manufacturers (27 percent) and 6 importers (55 percent) are JPMA-certified as ASTM-compliant. Additionally, there are two small manufacturers that claim compliance with the ASTM standard that are not part of JPMA's Certification Program.

The most recent United States birth data shows that there are approximately 4.3 million births per year. The vast majority of these babies eventually use cribs for sleeping purposes, although there is some evidence that play yards are becoming a common substitute. In fact, according to a 2005 survey conducted by the American Baby Group (*2006 Baby Products Tracking Study*), 22 percent of new mothers own convertible cribs. Approximately 16 percent of convertible cribs were handed down or purchased second-hand.[1] If these rates hold, this suggests annual convertible crib sales of about 795,000 ($0.22 \times 0.84 \times 4.3$ million births per year). Of those consumers with non-convertible cribs, some proportion of them will eventually use toddler beds when their children get older. However, consumers may choose to use a twin or larger bed and use portable bed rails rather than use a separate toddler bed. Assuming that approximately 50 percent elect to use toddler beds and that approximately 50 percent of those buy them new, this would mean that around 839,000 toddler beds are sold per year (0.78 non-convertible cribs $\times$ 4.3 million births $\times$ 0.5 use toddler beds $\times$ 0.5 buy them new).[2] Adding this to the estimate of convertible cribs yields a total of approximately 1.6 million units (convertible cribs and toddler beds) sold per year that might be affected by the proposed toddler bed standard.

Reason for Agency Action and Legal Basis for the Proposed Rule. Section 104 of the CPSIA requires the CPSC to promulgate a mandatory standard for toddler beds that is substantially the same as, or more stringent than, the voluntary standard. The Commission is proposing four additional requirements to the current ASTM standard. The first would assure more structurally sound guardrails. The second is intended to reduce the likelihood of entrapments due to broken slats/spindles. The third would improve the safety of guardrails by adding height requirements. The fourth, modified warnings, is intended to emphasize that deaths in toddler beds have occurred due to entrapments and strangulation. The Commission concludes that the more stringent standard would reduce the risk of future injuries and deaths associated with toddler beds and convertible cribs.

Compliance Requirements of the Proposed Rule. The Commission proposes adopting the voluntary ASTM standard for toddler beds with four additions. Key components of ASTM F 1821—09 include:

- Mattress retention requirements intended to control the horizontal position of the mattress and prevent torso entrapments, as well as assure that the mattress does not fall too far below the mattress support when used by a child of the maximum recommended weight (50 lbs);
- Mattress support systems requirements intended to prevent disengagement which might result in a sharp edge or an opening in which a child might become entrapped;
- Requirements for mattress support systems attached to end structures intended to assure that the mattress support system remains attached to the end structures and does not create a hazard, such as sharp edges or openings in which a child might become entrapped;
- Requirements for guardrails intended to prevent openings in guardrails in which children might be trapped; and
- End structures intended to prevent openings in end structures in which children might be trapped.

The voluntary standard also includes: (1) Requirements for several features to prevent entrapment and cuts (minimum and maximum opening size, hazardous sharp points or edges, and edges that can scissor, shear, or pinch); (2) torque and tension tests to assure that components cannot be removed; (3) requirements for partially bounded openings; (4) marking and labeling requirements; (5) requirements for the permanency and adhesion of labels; (6) requirements for instructional literature; and (7) requirements to address corner post extensions, which may catch various children's items and pose a choking hazard.

[1] The data on second-hand products for new mothers was not available. Instead, data for new mothers and expectant mothers was combined and broken into first-time mothers and experienced mothers. Data for first-time mothers and experienced mothers was averaged to calculate the approximate percentage that was handed down or purchased second-hand.

[2] Any per-year estimate for toddler beds will be approximate since when parents make such a purchase for their child is likely to vary.

Based on CPSC staff recommendations, the Commission proposes to modify the existing ASTM standard by revising the entrapment/strangulation warnings, and adding three new requirements for guardrail height, slat/spindle strength, and structural integrity for guardrails:

- *Guardrail height.* The proposed rule would require that guardrails be a minimum height of 5 inches above the manufacturer's recommended sleeping surface. This will help prevent falls.
- *Slat/spindle strength.* The proposed rule adds a new requirement to test the strength of spindles and slats in guardrails, side rails, and end structures using an 80-lb force.
- *Structural integrity for guardrails. In addition to the existing test* for guardrail openings, the proposed rule would add a test for the overall stability of guardrails using a 50-lb force while the bed is firmly secured. This additional test is intended to help prevent children from falling out of bed; it is also calculated to ensure that the guardrails remain intact when children lean against them or attempt to use them to climb into bed.
- *Entrapment/strangulation warnings.* The proposed rule would modify the existing warnings by adding a more detailed description of mechanisms creating the hazard and separating the entrapment and strangulation messages into two warning labels. This is intended to increase the efficacy of the warning by emphasizing the potential for death for each of the two different mechanisms.

As explained earlier in section F of this preamble, toddler beds and convertible cribs entering commerce would need to meet the new requirements if they are manufactured or imported after 6 months from the date of publication of the final rule. In other words, the standard, if finalized, would not apply retroactively.

The recommended slat/spindle strength requirement may help prevent incidents where slats break and children are either cut, fall through the opening, or become entrapped. This proposed modification to the current voluntary standard could potentially add significant costs to toddler bed and convertible crib suppliers. Preliminary testing indicates that some toddler beds and convertible cribs currently on the market would meet this requirement with no further modifications, while others would not.

Plastic toddler beds would be exempt from the slat/spindle requirement, because they do not have wooden slats/spindles and have not been associated with the hazards addressed by this requirement. Therefore, we believe that some products will need to be modified to meet the slat/spindle requirement, which is likely to affect at least a few firms.

Suppliers may also need to make product modifications to meet the revised structural integrity requirement and new height requirement for guardrails. No testing has been performed so far that would indicate how many products currently on the market would meet these requirements, but it appears that at least some products will be able to meet the guardrail height requirements. It is possible for firms to eliminate guardrails from their products entirely as a way to address the proposed guardrails requirements if they can comply with the other requirements of the proposed standard without the guardrail in place (guardrails themselves are not required). However, it would be unreasonable to assume that all of the firms whose products may require modifications can or will take this approach. Therefore, it is expected that at least some products will require modifications to meet these guardrail requirements and that at least a few firms will be affected.

In meeting the slat/spindle strength and guardrail structural integrity requirements, it is possible that firms may improve the quality of materials used to make the slats/spindles or guardrails. (Plastic toddler beds and convertible cribs would not need to make such modifications since they have not been associated with the identified risks from these parts.) For wooden toddler beds and convertible cribs, switching to a stronger material is unlikely to exceed more than a few dollars per unit. For example, using white ash rather than western white pine improves average strength properties by an average of 74 percent (*http://www.woodbin.com/ref/wood/strength_table.htm*) while increasing the price of the material by an average of 26 percent (*http://www.willardbrothers.net/ORDER%20FORM.htm*) for a maximum of $1.55 more for the largest quantity listed. These cost differentials are based on raw lumber costs which would affect firms differently, depending upon how much wood was used in their particular product. Metal toddler beds/convertible cribs are less common than products made from wood or plastic, but material changes should not be substantially more expensive than for wooden products. Alternatively, firms could undertake product redevelopment to develop compliant toddler beds, which would likely be more expensive than using alternate materials. Therefore, it is likely that at least some firms would select the less expensive option.

Increasing the height of guardrails may help prevent children from falling from the bed. As discussed above, the proposed rule would not require guardrails to be included with toddler beds or convertible cribs, so firms with noncompliant products have the option of eliminating guardrails entirely if their products will comply with the other requirements of the proposed standard with the guardrails removed. Alternatively, they could redesign their product (or the guardrail portion of their product) to make their guardrails higher. If the second option is taken, there will likely be some cost associated with product redevelopment, as well as some increased costs for additional materials.

The remaining requirements, entrapment and strangulation warnings, are expected to have only a minimal impact on current suppliers of toddler beds or convertible cribs. The revised warnings would be only a minor modification for firms currently complying with the ASTM standard. Even for those firms supplying toddler beds without such a warning or with a warning that differs from the one outlined in the current voluntary standard, the costs associated with printing a revised warning or a completely new warning would be low.

Other Federal Rules. CPSC staff has not identified any federal or state rule that either overlaps or conflicts with the staff's draft proposed rule.

Impact on Small Businesses. There are 73 firms currently known to be marketing toddler beds and/or convertible cribs in the United States. Six are large domestic manufacturers, 1 is a domestic manufacturer of unknown size, 2 are large domestic importers, and 12 are foreign firms. The impact on the remaining 52 small firms—34 firms known to be small domestic manufacturers, 7 firms that are presumed to be small domestic manufacturers, and 11 small domestic importers—is the focus of the remainder of this analysis.

Small Domestic Manufacturers. For the most part, the impact of the proposed standard on small manufacturers will differ based on whether they currently comply with the voluntary ASTM standard. If they do not, as is the case with 28 firms, the impact could be significant. These firms would likely have to undergo product redevelopment. As explained below, the cost of such an effort for toddler beds and convertible cribs is unknown, but could be substantial for some firms.

Product development costs include product design, development and

marketing staff time, product testing, and focus group expenses. These costs can be very high, particularly when there are multiple products, but they can be treated as new product expenses and amortized over time. If a firm deals with multiple products subject to the proposed standard, there may be some economies of scale for some of these development stages that would reduce the marginal costs for each new product being redeveloped. Other one-time costs include the retooling of manufacturing equipment, which could be gradually recouped over the sales of numerous units. There are also expected to be increased costs of production. Producing toddler beds and convertible cribs that have greater structural integrity, stronger slats/spindles, and higher guardrails may require additional raw materials or possibly heavier materials. In addition to increasing the costs of production, this could increase shipping costs as well.

Even if these firms are able to pass their increased costs on to consumers, the impact could still be considerable. This is because firms manufacturing toddler beds and convertible cribs are not simply competing against other producers of toddler beds and convertible cribs. They also compete against producers of substitute products, firms whose products would not be subject to the proposed standard. Toddler bed producers must compete with producers of twin (or possibly larger) beds that can be used with portable guardrails, while convertible cribs must compete with these same products for larger children and with standard cribs for smaller children.

There is expected to be less of an impact on the 13 firms that are known to comply with the current voluntary standard. At least some of these firms should be able to comply with the new requirements without product modifications other than labeling. The remaining firms may opt to redesign their products as well, which, again, would result in some one-time costs and a possible increase in production costs. It is also possible, however, that they may be able to select a potentially less expensive option to address some of the recommended requirements. A modification in the materials used may be sufficient for many products, and the associated cost is not expected to exceed a few dollars per unit.

There are two manufacturers that do not comply with the current voluntary ASTM standard that would be affected differently by the proposed standard. These firms take already manufactured toddler beds and convertible cribs, decorate them (often with original artwork), and then sell them as a final product. Because these firms do not make the underlying toddler beds and convertible cribs, the impact of the proposed standard on these firms will be the same as that of an importer. These firms would need to find a new supplier of compliant products if their current supplier does not make the necessary modifications. The new products would presumably be of higher quality, as well as more expensive since some of the original manufacturer's production costs (and possibly redevelopment costs) are likely to be passed on to these firms.

The scenario described above assumes that only those firms that are JPMA-certified or claim ASTM compliance will pass the voluntary standard's requirements. This is not necessarily the case. CPSC staff has identified many cases where products not certified by JPMA actually comply with the relevant ASTM standard; however, there is insufficient evidence of this for toddler beds and convertible cribs to quantify this impact. Additionally, the effect of the new and modified requirements may be less substantial than outlined above to the extent that some products may already comply with foreign standards with some more rigorous requirements. However, there is insufficient information to quantify this effect. Therefore, the Commission invites comments from small businesses affected by this proposal explaining the economic impact it will impose on them.

Small Domestic Importers. The majority of small domestic importers (six out of 11) comply with the current voluntary standard. At least some of these firms should not need to make any product modifications (other than labeling) to meet the proposed standard. However, those whose products do require modifications will need to find an alternate supplier if their existing one does not come into compliance. The new products will presumably be of higher quality, as well as more expensive. However, the actual price increase is unknown and likely to vary based upon the degree of modification required. All of the remaining five firms not now in compliance with the ASTM voluntary standard would need to either require their current supplier to make the modifications necessary to comply with the standard or find other suppliers that did comply. Depending on the degree to which their toddler beds and convertible cribs are out of compliance with the voluntary standard, the price increase (as well as the increases in quality and safety) could be relatively high. To the extent that some of these firms may actually comply with the current voluntary standard or one or more of the new/modified requirements in the proposed standard, the impact of the proposed rule would be lower.

For the most part, the impact of the proposed rule on importers should be smaller than that on manufacturers. Even if importers respond to the rule by discontinuing the import of noncomplying toddler beds and convertible cribs, either by replacing them with a complying product or another juvenile product, deciding to import an alternative product would be a reasonable and realistic way to offset any lost revenue. The one exception would be firms for which convertible cribs or toddler beds and their associated products (*i.e.,* matching furniture) form the core of their product line. For these firms, a substantial price increase could possibly drive them out of business or require them to rebuild their business based on alternative products.

Alternatives. Under section 104 of the CPSIA, the primary alternative that would reduce the impact on small entities is to make the voluntary standard mandatory with no modifications. (This option may not be feasible, given the CPSIA's direction for the Commission to issue more stringent standards if that would further reduce the risk of injury associated with durable nursery products.) For small domestic manufacturers that already meet the requirements of the voluntary standard, adopting the standard without modifications may reduce their costs relative to the proposed rule, but only marginally. Similarly, limiting the requirements of a final rule to those now in the voluntary standard would probably have little beneficial impact on small manufacturers that do not currently meet the requirements of the voluntary standard. This is because, for these firms, most of the cost increases would be associated with meeting the requirements of the current voluntary standard, rather than the changes associated with the proposed rule. The difference for importers, whether compliant with the voluntary standard or not, is also likely to be minimal.

Conclusion. The proposed rule could have a significant impact on a substantial number of small entities. Even if all the small firms that are JPMA-certified as compliant with ASTM's voluntary standard did not require any changes other than labeling to comply with the proposed standard, there would still be 63 percent (33 out of 52 firms) that would probably need to redevelop their products to comply.

This would typically need to be done for multiple products for each firm. (To the extent that some of the products not certified by JPMA may still comply, the impact will be reduced.) Firms supplying products that already comply with the voluntary standard may not need to make any product modifications (other than labeling) to meet the proposed rule, but this applies to only 42 percent of the known small firms. Some of these firms, and basically all of the other small firms, will need to make at least some modifications to their toddler beds and convertible cribs to comply with the proposed rule. The extent of these costs is unknown, but since product redevelopment would likely be necessary in many cases, it is possible that the costs could be large and have the potential to reduce firms' ability to compete with substitute products.

Nineteen small businesses are believed to have product lines consisting entirely or primarily of toddler beds, convertible cribs, and related products (such as accompanying furniture). These firms may be affected disproportionately by the proposed rule. If the cost of developing (or importing) a compliant product proves to be a barrier for these firms, the loss of toddler beds and convertible cribs as a product category could be significant and may not be easily mitigated by the sale of other juvenile products.

L. Request for Comments

All interested persons are invited to submit their comments to the Commission on any aspect of the proposed rule. Comments should be submitted in accordance with the instructions in the **ADDRESSES** section at the beginning of this notice.

M. References

1. CPSC staff memorandum, from Celestine T. Kiss, Project Manager, Division of Human Factors, Directorate for Engineering Sciences, and Robert J. Howell, Assistant Executive Director, Office of Hazard Identification and Reduction, "Staff's Draft Proposed Rule for toddler Beds," March 3, 2010, with Tabs A–D.

2. CPSC staff memorandum, from Risana T. Chowdhury, Division of Hazard Analysis, to Celestine T. Kiss, Division of Human Factors, Directorate for Engineering Sciences, "Toddler Beds-Related Deaths, Injuries and Potential Injuries, and NEISS Injury Estimates; 2005–Present," January 28, 2010 (Tab A to Ref. 1).

3. CPSC staff memorandum, from Jacob J. Miller, Division of Mechanical Engineering, Directorate for Engineering Sciences, to Celestine T. Kiss, Project Manager, Division of Human Factors, Directorate for Engineering Sciences, "Proposed Changes to ASTM F 1821–09, Standard consumer Safety Specification for Toddler Beds, for Incorporation in Staff's Draft Proposed Rule," February 23, 2010 (Tab B to Ref. 1).

4. CPSC staff memorandum, from Timothy P. Smith, Engineering Psychologist, Division of Human Factors, Directorate for engineering Sciences, to Celestine T. Kiss, Project Manager, Division of Human Factors, Directorate for Engineering Sciences, "Warning Statements for Toddler Beds (CPSIA Section 104)," March 3, 2010 (Tab C to Ref. 1).

5. CPSC staff memorandum, from Jill L. Jenkins, Ph.D., Economist, Directorate for Economic Analysis, to Celestine T. Kiss, Project Manager for Toddler Beds, Division of Human Factors, Directorate for Engineering Sciences, "Initial Regulatory Flexibility Analysis of Proposed Standard for Toddler Beds," February 18, 2010 (Tab D to Ref. 1).

List of Subjects in 16 CFR Part 1217

Consumer protection, Infants and children, Incorporation by reference, Law enforcement, Safety, Toddler beds.

For the reasons stated above, and under the authority of 5 U.S.C. 553, and sections 3 and 104 of Public Law 110–314, 122 Stat. 3016 (August 14, 2008), the Consumer Product Safety Commission proposes to add a new 16 CFR part 1217 as follows:

PART 1217—SAFETY STANDARD FOR TODDLER BEDS

Sec.

1217.1 Scope, application, and effective date.

1217.2 Requirements for toddler beds.

Authority: Sections 3 and 104 of Pub. L. 110–314, 122 Stat. 3016 (August 14, 2008).

§ 1217.1 Scope, application, and effective date.

This part 1217 establishes a consumer product safety standard for toddler beds manufactured or imported after 6 months after publication of the final rule in the **Federal Register**.

§ 1217.2 Requirements for toddler beds.

(a) Except as provided in paragraph (b) of this section, each toddler bed as defined in ASTM F 1821–09, *Standard Consumer Safety Specification for Toddler Beds*, approved April 1, 2009, shall comply with all applicable provisions of ASTM F 1821–09, as that standard is amended by this part 1217. The Director of the Federal Register approves this incorporation by reference in accordance with 5 U.S.C. 552(a) and 1 CFR part 51. You may obtain a copy of this ASTM standard from ASTM International, 100 Barr Harbor Drive, PO Box C700, West Conshohocken, PA 19428–2959 USA, phone: 610–832–9585; *http://www.astm.org/*. You may inspect copies at the Office of the Secretary, U.S. Consumer Product Safety Commission, Room 820, 4330 East West Highway, Bethesda, MD 20814, telephone 301–504–7923, or at the National Archives and Records Administration (NARA). For information on the availability of this material at NARA, call 202–741–6030, or go to: *http://www.archives.gov/federal_register/code_of_federal regulations/ibr_locations.html.*

(b) Comply with ASTM 1821–09 with the following additions or exclusions.

(1) Instead of the section number of section 6.5 and its introductory heading "Guardrails—" comply with the following:

(i) 6.5.1

(ii) Reserved.

(2) In addition to section 6.4 of ASTM F 1821–09, comply with the following:

(i) 6.5 *Guardrails:*

(ii) [Reserved]

(3) In addition to complying with the provisions of paragraphs (b)(1) and (b)(2) of this section, comply with the following:

(i) 6.5.2 The upper edge of the guardrails shall be at least 5 in. (130 mm) above the sleeping surface when a mattress of a thickness that is the maximum specified by the manufacturer's instructions is used.

(ii) [Reserved]

(4) In addition to section 6.4 of ASTM 1821–09 comply with the following:

(i) 6.8 *Structural Integrity of Guardrails*—After testing in accordance with 7.9, there shall be none of the hazardous conditions described in Section 5.

(ii) [Reserved.]

(5) In addition to the changes to ASTM 1821–09 in paragraphs (b) (1), (2) and (3) of this section comply with the following:

(i) 6.9 *Slat/Spindle Strength*—Toddler beds that contain wooden or metal slats or spindles shall meet the performance requirements outlined in section 6.9.1.

(A) 6.9.1 After testing in accordance with the procedure in 7.10, there shall be no slat or spindle breakage or separation of a slat or spindle from the guardrails, side rails, or end structures.

(B) [Reserved]

(ii) [Reserved]

(6) In addition to section 7.8 of ASTM 1821–09 comply with the following:

(i) 7.9 *Test Method for Guardrail Structural Integrity:*

(A) 7.9.1 Firmly secure the toddler bed on a stationary flat surface using clamps. Gradually apply 50 lbf to the uppermost horizontal part of the mattress side of the guardrail in a direction perpendicular to the plane of the rail. The force should be applied in the center along the length of the rail and then repeated with the force applied directly over each of the outermost legs of the guardrail. The force should be applied in the direction away from the mattress within a period of 5 s and maintained for an additional 10 s.

(B) [Reserved]

(ii) [Reserved]

(7) In addition to the changes to ASTM 1821–09 in paragraph (b)(5) of this section comply with the following:

(i) 7.10 *Slat/Spindle Testing for Guardrails, Side Rails, and End Structures:*

(A) 7.10.1 The spindle/slat static load test shall be performed for all slats and spindles with the spindle/slat assemblies removed from the bed and supported only on the rail corners through a contact area not more than 3 square inches when measured parallel to the longitudinal axis of the end of the rail. Besides the corners, the upper and lower horizontal rails of both linear and contoured shall be free to deflect under the applied force.

(B) 7.10.2 Gradually, over a period of not less than 2 s or greater than 5 s, apply the force specified in 7.10.3 or 7.10.4 at the midpoint between the top and bottom of the spindle/slat being tested. This force shall be applied through a contact area large enough to not cause visible indentation or cutting of the spindle/slat, but not wider than 1 in. (2.54 cm) when measured parallel to the longitudinal axis of the spindle/slat. This weight shall be maintained for 30 seconds.

(C) 7.10.3 Test, according to 7.10.2, 25% (or the next highest percentage if 4 does not divide evenly into the total number) of all spindles/slats with a force of 80 lb. Spindles/slats that offer the least resistance to bending based upon their geometry shall be selected to be tested within this grouping of 25%, except that adjacent spindles/slats shall not be tested per 7.10.2. Place an identifying mark on all tested spindles/slats.

(D) 7.10.4 Upon completion of the test described in 7.10.2 and 7.10.3, gradually apply, over a period of not less than 2 s or greater than 5 s, 60 lbf (266.9 N) at the midpoint between the top and bottom of all spindles/slats not previously tested under 7.10.2 and 7.10.3. This force shall be applied through a contact area large enough to not cause visible indentation or cutting of the spindle/slat, but not wider than 1 in. (2.54 cm) when measured parallel to the longitudinal axis of the spindle/slat. This force shall be maintained for 30 s.

(E) 7.10.5 End vertical rails that are joined between the slat assembly top and bottom rails are not considered slats and do not require testing under 7.10.

(ii) [Reserved]

(8) Comply with ASTM 1821–09 section 8.4. Instead of complying with section 8.4.3, including the warning label, and sections 8.4.4 through 8.4.5 of ASTM 1821–09, use the following:

(i) 8.4.3 Toddler beds that meet the performance requirements of sections 5.8.2 (torso entrapment), 6.1 (mattress retention), 6.2 (mattress support system integrity), 6.3 (mattress support system attachment to end structures), 6.4 (mattress support system openings), 6.6 (end structure openings), and 6.7 (partially bounded openings) with the guardrails removed may bear the following label, exactly as depicted, instead of the label required by section 8.4.4:

⚠WARNING

INFANTS HAVE DIED IN TODDLER BEDS FROM ENTRAPMENT.
Openings in and between bed parts can entrap head and neck of a small child.
NEVER use bed with children younger than 15 months.
ONLY use full-size crib mattress of the recommended size.
ALWAYS follow assembly instructions.

(ii) 8.4.4 All toddler beds that do not bear the label allowed for certain toddler beds by section 8.4.3, shall bear the following label, exactly as depicted:

⚠WARNING

INFANTS HAVE DIED IN TODDLER BEDS FROM ENTRAPMENT.
Openings in and between bed parts can entrap head and neck of a small child.
NEVER use bed with children younger than 15 months.
ALWAYS use supplied guardrails to avoid gaps between mattress and bed.
ONLY use full-size crib mattress of the recommended size.
ALWAYS follow assembly instructions.

(iii) 8.4.5 In addition to the label allowed by section 8.4.3 or required by section 8.4.4, all toddler beds shall bear the following label, exactly as depicted:

⚠WARNING

STRANGULATION HAZARD

NEVER place bed near windows where cords from blinds or drapes may strangle a child.
NEVER suspend strings over bed.
NEVER place items with a string, cord, or ribbon, such as hood strings or pacifier cords, around a child's neck. These items may catch on bed parts.

Dated: March 24, 2010

Todd Stevenson,

Secretary, U.S. Consumer Product Safety Commission.

[FR Doc. 2010–6947 Filed 4–27–10; 8:45 am]

BILLING CODE 6355–01–P

CONSUMER PRODUCT SAFETY COMMISSION

16 CFR Part 1218

[CPSC Docket No. CPSC–2010–0028]

Safety Standard for Bassinets and Cradles: Notice of Proposed Rulemaking

AGENCY: Consumer Product Safety Commission.

ACTION: Notice of proposed rulemaking.

SUMMARY: Section 104(b) of the Consumer Product Safety Improvement Act of 2008 ("CPSIA") requires the United States Consumer Product Safety Commission ("CPSC" or "Commission") to promulgate consumer product safety standards for durable infant or toddler products. These standards are to be "substantially the same as" applicable voluntary standards or more stringent than the voluntary standard if the Commission concludes that more stringent requirements would further reduce the risk of injury associated with the product. The Commission is proposing a more stringent safety standard for bassinets and cradles that will further reduce the risk of injury associated with these products.

DATES: Written comments must be received by July 12, 2010.

ADDRESSES: Comments relating to the instructional literature and marking required by the proposed rule relating to the Paperwork Reduction Act should be directed to the Office of Information and Regulatory Affairs, OMB, Attn: CPSC Desk Officer, FAX: 202–395–6974, or e-mailed to *oira_submission@omb.eop.gov*.

Other comments, identified by Docket No. CPSC–2010–_____, may be submitted by any of the following methods:

Electronic Submissions

Submit electronic comments in the following way:

Federal eRulemaking Portal: http://www.regulations.gov. Follow the instructions for submitting comments. To ensure timely processing of comments, the Commission is no longer accepting comments submitted by electronic mail (e-mail) except through *http://www.regulations.gov.*

Written Submissions

Submit written submissions in the following way:

Mail/Hand delivery/Courier (for paper, disk, or CD–ROM submissions), preferably in five copies, to: Office of the Secretary, Consumer Product Safety Commission, Room 502, 4330 East-West Highway, Bethesda, MD 20814; telephone (301) 504–7923.

Instructions: All submissions received must include the agency name and docket number for this rulemaking. All comments received may be posted without change, including any personal identifiers, contact information, or other personal information provided, to *http://www.regulations.gov*. Do not submit confidential business information, trade secret information, or other sensitive or protected information electronically. Such information should be submitted in writing.

Docket: For access to the docket to read background documents or comments received, go to *http://www.regulations.gov.*

FOR FURTHER INFORMATION CONTACT: Han Lim, Project Manager, Directorate for Engineering Sciences, Consumer Product Safety Commission, 4330 East-West Highway, Bethesda, MD 20814; telephone (301) 504–7538; *hlim@cpsc.gov.*

SUPPLEMENTARY INFORMATION:

A. Background and Statutory Authority

The Consumer Product Safety Improvement Act of 2008, Public Law 110–314 ("CPSIA") was enacted on August 14, 2008. Section 104(b) of the CPSIA requires the Commission to promulgate consumer product safety standards for durable infant or toddler products. These standards are to be "substantially the same as" applicable voluntary standards or more stringent than the voluntary standard if the Commission concludes that more stringent requirements would further reduce the risk of injury associated with the product. In this document the Commission proposes a safety standard for bassinets and cradles. The proposed standard is more stringent in some respects than the voluntary standard developed by ASTM International (formerly the American Society for Testing and Materials), ASTM F 2194–07a$^{\varepsilon 1}$, "Standard Consumer Safety Specification for Bassinets and Cradles." The proposed modifications, if finalized, will further reduce the risk of injury associated with bassinets and cradles.

B. The Product

A bassinet or cradle is a small bed for infants supported by free-standing legs, a wheeled base, a rocking base, or that can swing relative to a stationary base. A bassinet or cradle is not intended to be used with children who are beyond the age of approximately 5 months. Bassinet and cradle attachments for non-full-size cribs or play yards are considered a part of this product category, as are bedside sleeper bassinets that can be converted to a four-sided bassinet not attached to a bed.

Full-size cribs and infant swings are not included under the definition of bassinet or cradle. Products used in conjunction with infant swings or strollers or Moses baskets (hand-carrying baskets) are not included under the definition of bassinet or cradle. However, a Moses basket or a similar product used with infant swings or strollers that can attach to a separate base which can convert it to a bassinet

or cradle is considered a bassinet or cradle.

While the current ASTM F 2194–07a$^{\varepsilon 1}$ standard does not explicitly state that infant hammocks are within the scope of the standard, the Juvenile Products Manufacturers Association, (JPMA), historically has certified infant hammocks under the bassinet/cradle standard. Two firms have hammocks certified by JPMA to the ASTM F 2194—07a$^{\varepsilon 1}$ standard.

By nature of their design, most hammocks do not have a rigid sleep surface. The Commission believes that many of the current designs it has been studying result in uneven suspension of the product, which can cause the hammock to tip to one side, trapping the baby in a face down position and increasing the risk of positional asphyxia or suffocation. Because of this hazard pattern, CPSC recently recalled an infant hammock. Since the sleeping environment of most hammocks differs from that of bassinets and cradles, the Commission believes a separate standard for hammocks may be necessary. Most hammocks have mattresses that are flexible and conform to the body contours of the infant, whereas bassinets and cradles have flat mattresses with solid or fabric sides. In a November 17, 2009 CPSC/ASTM teleconference, ASTM agreed to form a subcommittee to develop requirements for a new hammock standard. Until a separate standard for hammocks is developed, the Commission believes it is prudent to include hammocks under the proposed rule for bassinets and cradles as an interim measure because the proposed rule addresses the hazard pattern which causes the infant to roll/press up against the side or corner of the product, posing a risk of positional asphyxia or suffocation. The Commission is aware that, by their nature, most infant hammocks will likely be unable to meet the proposed performance criteria of a 5° rest angle, 5° flatness angle, and a 20° maximum rock/swing angle in this proposed standard, and will thus be effectively banned. The Commission seeks comment on whether such action is necessary given the risk of positional asphyxia the rule attempts to address. The Commission may remove hammocks from the scope of a bassinets/cradles standard in the future, should ASTM develop an effective voluntary standard for hammocks. The Commission seeks information regarding proposals for an infant hammock standard.

Applying American Baby Group survey data from 2005 to the most recent U.S. birth data from the Centers for Disease Control and Prevention (CDC) yields annual estimates of about 1.4 million bassinets, 333,000 cradles, 596,000 portable play yards with bassinet attachments, and 749,000 full-size play yards with bassinet attachments. (The data collected for the *Baby Products Tracking Study* does not represent an unbiased statistical sample.) This yields a total of approximately 3.1 million units sold per year.

C. ASTM Voluntary Standard

ASTM first approved and published the voluntary standard for bassinets and cradles in 2002 as ASTM F 2194, *Standard Consumer Safety Specification for Bassinets and Cradles.* ASTM has revised the standard a number of times since 2002, with the current version, ASTM F 2194–07a$^{\varepsilon 1}$, published in November 2007. ASTM F 2194–07 $^{\varepsilon 1}$ contains requirements to address the following:

- Lead in paint;
- Hazardous sharp edges or points;
- Small parts;
- Wood parts;
- Scissoring, shearing, pinching;
- Unintentional folding;
- Openings;
- Labeling;
- Fasteners;
- Corner posts;
- Toy accessories;
- Bassinet/cradle attachments to play yards/non-full sized cribs;
- Spacing of rigid sided bassinet/cradle components;
- Openings for mesh/fabric-sided bassinet/cradle;
- Static load;
- Stability;
- Sleeping pad properties; and
- Protective components.

JPMA operates a certification program to certify bassinets and cradles to the voluntary standard. To obtain JPMA certification, manufacturers submit their products to an independent test laboratory for conformance testing to the most current voluntary standard. Currently, bassinets or cradles supplied by eight small manufacturers and four small importers are JPMA certified to ASTM F 2194–07a$^{\varepsilon 1}$.

D. Incident Data

1. Categories of Incidents

The CPSC Directorate for Epidemiology reports that there have been 209 incidents related to bassinets and cradles since 2006, of which there were 61 fatalities, 38 non-fatal injuries, and 110 non-injury incidents. The incidents were grouped into five categories: (a) Product-related issues, in which sufficient information was available to describe the product failure modes or defects; (b) non-product-related issues; (c) unknown issues (incidents that lacked specificity), (d) recalled product-related issues; and (e) miscellaneous other issues.

a. *Product-Related Issues.* Eighty-seven of the 209 incidents, or approximately 42%, involved hardware failures or design issues related to the product. The reported problems are listed below, beginning with the most frequently reported problems:

- Inadequate structural integrity, which included unstable bassinets or cradles, loose hardware, collapse of the product, loose wheels, *etc.;*
- Locking or tilting issues with the bassinets or cradles, which cause the infant to roll or press up against the side or corner of the product, posing a suffocation hazard;
- Problems with mattress flatness, such as mattresses that would not remain horizontal because of metal rods or other structures designed to be positioned underneath the mattress, lack of rigid mattress support, and failure of straps or hooks designed to hold bassinets inside play yards. One death was associated with a mattress flatness issue; and
- Problems with battery-powered bassinet mobiles which had components that overheated, smoked, or sparked.

b. *Non-Product-Related Issues.* Sixty of the 209 incident reports, or 29%, were of deaths or injuries that could not be attributed to a product defect or failure. Fifty-seven of the 60 incidents were deaths where a determination of causation or association was complicated by the inappropriate use of pillows, blankets, or mattresses.

c. *Unknown Issues.* Twenty-six of the incidents, or 12%, had little or no information. Twenty-five of these reported a fall of the infant out of the bassinet or cradle.

d. *Recalled Product-Related Issues.* There were 19 reports (9%) that involved recalled products. Among them were seven entrapments (three deaths, two non-fatal injuries, and two non-injury incidents) between the metal rods of the bassinet. The remaining 12 reports were complaints or inquiries from consumers regarding a recalled product.

e. *Miscellaneous Other Issues.* The remaining 17 incident reports involved a host of miscellaneous problems, including a tear in the bassinet fabric, odors, and product assembly or quality issues.

2. Deaths and Injuries

All 61 fatalities reported to CPSC staff were asphyxiation deaths. The majority of deaths (57 out of 61) were asphyxiations where the incident report noted the presence of soft or extra bedding in the bassinet, prone placement of the infant, or the infant getting wedged between the side of the bassinet and mattress or bedding. Soft or extra bedding and the prone placement of an infant are associated with infant mortality from asphyxiation, independent of any design hazard. A few were reported as asphyxiation deaths, with no further information available. Only four of these deaths were determined to have resulted from design flaws of the product. Three of the four deaths were due to entrapment of the infant between the metal bars of a particular brand of bassinet. Of those three deaths, two of the three infants were six months old and should not have been using the bassinet or cradle because by definition they are only for use up to five months. The fourth death resulted from an infant suffocating in the corner of the bassinet when he rolled into that position due to the unlevel mattress pad.

Thirty-eight incidents reported an injury to an infant. Twenty-three out of the 38 incidents, or 61%, were identified as falls out of the bassinets. Serious injuries included a skull fracture resulting from an infant falling out of the bassinet due to non-level mattress issues, an arm fracture resulting from a fall due to problems with a bassinet's rocking feature, and a second-degree burn resulting from the bassinet's overheated mobile. The remaining injuries were mostly limited to contusions and abrasions.

3. Hammock Incidents

The Commission is aware of three fatalities, six non-fatal injuries, and five non-injury incidents related to infant hammocks that were reported to have occurred since 2006. All three fatalities reported to CPSC were asphyxiation deaths. One five-month old infant was found rolled into a corner in a prone position with the bed in an inclined position. A four-month old infant was found with her face flat against the foam mattress. In the third case, the medical examiner reporting the fatality expressed concern about the safety of the hammock as a sleeping environment. However, the death of the six-month old infant, who was found in a prone position, was officially ruled to be asphyxiation due to respiratory infection.

All six non-fatal injuries were reported through the National Electronic Injury Surveillance System ("NEISS"). Five of the injuries were reported to have been falls out of hammocks, while the sixth injury was sustained when a broken component of the hammock struck the infant. Little or no circumstantial information is available on how the falls occurred, except that three of the six infants were eight months or older.

Two of the five non-injury reports involved infants (a seven-month old and a 12-month old) in near-strangulation incidents where the hammock flipped over with the infants dangling from restraints. The remaining three reports involved near-suffocation incidents where the infant rolled into a position from which it was unable to move or free itself. All three infants were under five months of age.

E. Assessment of Voluntary Standard ASTM F 2194–07a$^{\varepsilon 1}$ and Description of Proposed Changes and the Proposed Rule

1. Assessment of Voluntary Standard ASTM F 2194–07a$^{\varepsilon 1}$

Section 104(b) of the CPSIA requires the Commission to assess the effectiveness of the voluntary standard in consultation with representatives of consumer groups, juvenile product manufacturers, and other experts. This consultation process began in October 2009 during the ASTM International subcommittee meeting regarding the ASTM bassinet and cradle voluntary standard. Consultations with members of this subcommittee are still ongoing.

ASTM F 2194–07a$^{\varepsilon 1}$ contains several labeling and performance criteria. The standard addresses many of the same hazards associated with other durable nursery products and includes requirements for tip stability, unintentional folding of the product, lead in paints, sharp edges/sharp points, small parts, wood part splinters, scissoring/shearing/pinching, openings/entrapments, warning labels, and toys (which includes battery-powered mobiles). The Commission believes that updates and modifications in certain areas also may address the hazards described in the incident data, such as suffocation due to mattress tilting, placing of inappropriate bedding materials (*e.g.,* pillows, additional blankets, *etc.*), and entrapment in the frame structure. While overheating of battery-powered mobiles was identified in the incidents, those incidents were isolated to one company.

2. Proposed Changes to the ASTM Standard's Requirements

Consistent with section 104(b) of the CPSIA, the Commission, through this proposed rule, would establish a new 16 CFR part 1218, "Safety Standard for Bassinets and Cradles." The new part would incorporate by reference the requirements for bassinets and cradles in ASTM F 2194–07a$^{\varepsilon 1}$ with certain changes to specific provisions and additions to the standard, as discussed below. The proposed modifications and additions to the standard will further reduce the risk of injury associated with bassinets and cradles. Therefore, the proposed rule would adopt ASTM F 2194–07a$^{\varepsilon 1}$ as the mandatory safety standard for bassinets and cradles with the following additions and modifications:

- Specify in the scope that the standard is a performance specification for bassinets and cradles and that the intended use is for infants who are not able to push up on their hands and knees;
- Add terminology that defines what constitutes a bassinet or cradle;
- Add a performance requirement and test procedure for maximum allowable rocking angle, maximum allowable rest angle of the sleep surface, and maximum allowable flatness angle;
- Add a performance requirement and test procedure for fabric-sided bassinets and cradles;
- Add a performance requirement and test procedure for locking mechanisms intended to prevent rocking or swinging cradles from rocking or swinging the mattress bed;
- Add updated warnings to address proper use of bedding materials by providing more emphasis and prominence to the warnings; and
- Exclude strap restraints in bassinets and cradles.

Following is a more detailed discussion of these additions and modifications. To best understand the proposed standard, it is helpful to view the current ASTM F 2194–07a$^{\varepsilon 1}$ standard for bassinets and cradles and the Commission's proposed modifications along with the explanations provided in section E.2 of the preamble. The ASTM standard is available for viewing for this purpose during the comment period through this link: *http://www.astm.org/cpsc.htm.*

a. Scope (Proposed § 1218.2(b)(1)(i))

Bassinets and cradles should only be used in the early stages of an infant's development. Once an infant can push up by him/herself, a number of hazards are created, most notably falling

hazards. Thus, the proposed rule would add objective criteria of an infant capable of pushing up on hands and knees to the scope of the standard to clarify which products would be considered bassinets or cradles. The proposed rule also would clarify that the bassinet or cradle should be used only for infants up to approximately five months of age.

b. Newborn Infant CAMI Dummy (Proposed § 1218.2(b)(2)(i))

Because the proposed standard would require testing with a 7 pound Newborn CAMI Dummy in the Rock/Swing Angle test and the Bassinet/Cradle Flatness Angle test, proposed § 1218.2(b)(2) would provide this reference and a photograph.

c. Definition of Bassinet/Cradle (Proposed § 1218.2(b)(3)(i))

Proposed § 1218.2(b)(3)(i) would improve the definition of bassinet/cradle by identifying the products that are excluded from the standard. The updated definition would clarify that full-size and non-full size cribs are not covered. Also, because a bassinet or cradle is defined as a product that must be supported by a base, hand-carrying baskets would not be covered.

d. Bassinet/Cradle Accessory (Proposed § 1218.2(b)(4)(i))

The proposal would update the definition of a bassinet/cradle accessory to avoid confusion with accessories that can attach to products that are not intended exclusively for sleep, such as strollers.

e. Double Action Release Mechanism (Proposed § 1218.2(b)(5)(i))

Section 5.6.3 of ASTM F 2194–07a–$^{\varepsilon}$1 requires that products with a "double action release mechanism" latching or locking device require two distinct and separate actions for release of the mechanism. The voluntary standard does not define "double action release mechanism." The Commission has observed various multi-use products that can convert from a rocking bassinet to a stationary one. During this conversion, there are dual-action locking mechanisms that require rotating pop-out casters and then engaging a "tab"-lock to prevent the casters from rolling. Despite appearances, such dual-action locking mechanisms are not double action release mechanisms. To avoid confusion in what constitutes a double action release mechanism and to ensure that the locking mechanism works as intended in resisting collapse and/or movement, the Commission is proposing to adopt the same definition as used in the voluntary ASTM high chair standard F 404–08. Specifically, the proposed rule would define a double action release mechanism as a "mechanism requiring either two consecutive actions, the first of which must be maintained while the second is carried out or two separate and independent single action locking mechanisms that must be activated simultaneously to fully release."

f. Removable Cover (Proposed § 1218.2(b)(5)(ii))

Because the term removable cover is referenced in the test procedure for evaluating possible scenarios of entrapment hazards from bounded areas of fabric and rigid sides of a bassinet or cradle in proposed § 1218.2(b)(11)(iii), the proposed rule would add a definition of "removable cover" to the standard.

g. Maximum Deflection Angle and Rest Angle (Proposed § 1218.2(b)(5)(iii), 1218.2(b)(5)(iv), 1218.2(b)(10), and 1218.2(b)(11))

When a bassinet or cradle is not in a swinging or rocking mode, it needs to be level to facilitate a safe sleeping environment for infants. There was one death and several close calls associated with non-level bassinets/cradles. According to an in-depth investigation (IDI) report, a two month old male died in a bassinet portion of a play yard. The infant rolled, causing his face to be placed in the corner of the bassinet. One side was approximately five inches higher than the other. The metal poles upon which the bassinet was seated were too short to keep the sleep surface level. In one non-fatal incident, a mother found her two-week old male infant with his face against the mattress, covering his nose and mouth after he had slid down the side of the mattress. The product involved was a play yard-swinging bassinet combination. The IDI report states that the locking mechanism to prevent the swinging motion disengaged when the mother placed her son in the product. The infant was not injured, and the mother returned the product to the store. In another non-fatal incident, a mother found her five-month-old daughter in a bassinet-play yard combination asleep up against the back side of the bassinet portion. The infant was not injured when the strap holding the bassinet insert to the side of her play yard ripped, causing the bassinet to tip sideways. The photographs from the IDI report showed the bassinet sleep surface at a substantial angle when the strap failure occurred. The infant could have been trapped between the bassinet and side of the play yard.

To ensure a level sleeping environment for infants, the proposal would establish a performance requirement and test method for the maximum allowable rock/swing angle and maximum allowable rest angle of the bassinet/cradle. CPSC staff worked with ASTM to develop these performance requirements and test procedures to reduce potential suffocations and entrapments. The 20° maximum rock/swing angle recommendation is based on the Canadian regulation for cribs and cradles (SOR 86–962, available in its entirety at *http://www.canlii.org/en/ca/laws/regu/sor-86-962/latest/sor-86-962.html*), as well as on observations and measurements made by the Commission on recent model bassinets and cradles. The Canadian crib and cradle regulation is a widely accepted standard. The Commission believes the 20° limit included in the Canadian regulation allows sufficient rocking/swinging motion while maintaining safety. The 5° recommendation for the mattress rest angle is based on conclusions from the Australian study, "The Danger of Freely Rocking Cradles," by S.M. Beal *et al., Journal of Pediatric Child Health* (1995) and the performance requirements from AS/NZS 4385:1996 the Australian/New Zealand standard for infant's rocking cradles. The conclusions from the Australian study suggest that a maximum 5° rest angle from rocking cradles could minimize the risk of an infant rolling and getting trapped in a corner or other entrapment/asphyxiation scenario. The Commission seeks comment on the Australian study and any other literature that may be relevant to the recommendation on the mattress rest angle.

The test method for the maximum allowable rock/swing angle and rest angle performance requirements, the "Rock/Swing Angle test," is found in proposed § 1218.2(b)(11)(i). The test method is based on the procedure developed by the Task Group of the ASTM subcommittee for bassinets and cradles, with specific changes proposed by the Commission. CPSC test data have shown that some products have better angle measurement results (*i.e.,* a less steep angle) with the Newborn CAMI Dummy, and others get better results with the CAMI Dummy, Mark II. Thus, the proposal would require that the testing be done with the Newborn Infant CAMI Dummy, in addition to the CAMI Dummy, Mark II. Test data also showed that the placement of the dummy in the sleep surface can affect the results. For

example, placing the dummy next to the wall in a rocking cradle may produce an angle that is more severe compared to placing the dummy in the center. Therefore, the proposed procedures would describe how the dummy should be placed in the sleep surface. The proposed rule would also provide specific angle measurement procedures. Finally, because some products can swing along the head-to-toe axis, the proposed rule would require such products to be tested in that direction as well.

h. Flatness Angle (Proposed § 1218.2(b)(5)(v), 1218.2(b)(10)(ii), and 1218.2(b)(11)(ii)

Incidents involving bassinet/play yard combinations suggest that a sloped surface or a mattress with multiple seams (mattresses that double as a play yard cover) may have the potential for an asphyxia suffocation hazard, as an infant's head may become entrapped between the sloped mattress and bassinet wall surface. Proposed § 1218.2(b)(10)(ii) would require that the angle of the bassinet or cradle sleeping support surface not be greater than 5° when tested in accordance with the test procedures in proposed § 1218.2(b)(11)(ii). This is to ensure that the mattress does not deform and create a depression, sloped surface, or an appreciable gap between a bassinet wall surface and the mattress.

Proposed § 1218.2(b)(11)(ii) includes testing with the CAMI Infant Dummy, Mark II and the Newborn CAMI Dummy. The test is intended to ensure that the sleep surface of the bassinet or cradle is flat and will not tilt when either CAMI dummy is placed in a corner or edge of the sleeping surface. A dynamic test, which is a force applied over a relatively short period of time, is needed because it will simulate children turning themselves over in the mattress bed area, particularly in a bassinet/play yard combination product with multiple segmented seams.

i. Testing equipment (Proposed § 1218.2(b)(6))

In the standardization and calibration section, proposed § 1218.2(b)(6) would specify the type of angle instrument and its measurement resolution to minimize angle measurement variability. Also, proposed § 1218.2(b)(6) would specify the tolerance and calibration interval for the force gauge required on several performance tests to minimize force measurement variability.

j. Restraints (Proposed § 1218.2(b)(7)(i))

Infants lying on a flat surface do not need restraints and the use of restraints could contribute to a possible strangulation hazard. Therefore, proposed § 1218.2(b)(7)(i) would add language to the standard to clarify that bassinets should not include any restraint system that requires action on the part of the caregiver to secure the restraint.

k. Spacing of Rigid and Fabric-Sided Bassinet/Cradle Components (Proposed § 1218.2(b)(8), 1218.2(b)(10)(iii) and 1218.2(b)(11)(iii))

Seven incidents (among them three deaths) involved recalled products where infants were trapped between structural members of the bassinet. Bassinets and cradles with fabric sides can present similar entrapment hazards from bounded areas of fabric and rigid sides of a bassinet or cradle. ASTM F 2194—07a $^{\varepsilon 1}$ contains performance requirements and test methods for the spacing of rigid sided bassinet and cradle components, intended to minimize torso and/or head entrapments. Because similar hazards are presented by fabric-sided bassinets and cradles, the proposed rule would include performance requirements and test methods for fabric-sided bassinets and cradles as well. For some types of bassinets or cradles with fabric removable covers, it is foreseeable that a parent or caregiver will place fabric back loosely onto a bassinet or cradle after washing and forget to fasten the snaps, zippers, or other fasteners. If the fabric should slip and separate from the structural members of the bassinet/cradle wall, an infant's torso may become entrapped between two structural members of a bassinet/cradle. Also, it is possible that an infant can suffocate if he or she is trapped in a bounded area between structural members and fabric. Thus, the proposed rule would require testing in this configuration, *i.e.,* where the fabric cover is placed loosely on the bassinet or cradle but is unfastened, as well.

The test method for this performance requirement is found in proposed § 1218.2(b)(11)(iii). Proposed § 1218.2(b)(11)(iii) would require that fabric-sided bassinets or cradles comply with the crib spacing requirements in 16 CFR Part 1509.4 when subjected to the 20 pound (lb) probe test. The fabric must not fully release and form a completely bounded opening which would allow complete passage of the torso test probe. The bassinets and cradles must comply both when the fabric cover is fastened and when it is unfastened. The Commission believes it is reasonable to use the crib spacing requirements in 16 CFR Part 1509.4, given that infants of similar ages are utilizing bassinets or cradles and cribs. While the ASTM committee initially proposed a 35 lb force for the probe test, the Commission believes that 20 lbs appears to be consistent with the crib standard (16 CFR Part 1509.6) and is more realistic for infants in the age range of less than five months. ASTM subcommittee for bassinets and cradles, with CPSC staff's input, developed the proposed test procedures.

k. Stability (Proposed § 1218.2(b)(9)(i))

Because at least three of the 87 product-related incidents involved a locking mechanism failure or malfunction, proposed rule § 1218.2(b)(9)(i) would include test scenarios where the bassinet or cradle is tested with the locking mechanism(s) engaged if it is equipped with a locking mechanism to prevent swinging or rocking. This requirement would ensure the stability of the product in modes where the locks are engaged to prevent swinging or rocking.

l. Marking and Labeling Section (Proposed §§ 1218.2(b)(12) Through (b)(14))

Because many deaths and non-fatal incidents involve suffocation due to caregivers and parents using bedding materials (such as pillows and blankets) that are not specified by the manufacturer, and because these incidents cannot be addressed by the design of the bassinet or cradle, it is imperative to improve the warning labels regarding padding and soft bedding in the standard. Consequently, proposed §§ 1218.2(b)(12) through (14) would require certain warning statements or labeling information regarding a suffocation hazard.

F. Request for Comments

This proposed rule begins a rulemaking proceeding under section 104(b) of the CPSIA to issue a consumer product safety standard for bassinets and cradles. We invite all interested persons to submit comments on any aspect of the proposed rule. Comments should be submitted in accordance with the instructions in the **ADDRESSES** section at the beginning of this notice.

G. Effective Date

The Administrative Procedure Act ("APA") generally requires that the effective date of a rule be at least 30 days after publication of the final rule. 5 U.S.C. 553(d). To allow time for bassinets and cradles to come into compliance, the Commission intends that the standard would become effective six months after publication of a final rule. The Commission seeks

comment on how long it would take manufacturers of bassinets and cradles to come into compliance with the rule.

H. Regulatory Flexibility Act

The Regulatory Flexibility Act ("RFA") generally requires that agencies review proposed rules for their potential economic impact on small entities, including small businesses. 5 U.S.C. 603.

1. The Market

Bassinets and cradles are typically produced and/or marketed by juvenile product manufacturers and distributors. There are currently at least 48 known manufacturers or importers supplying bassinets and/or cradles to the United States market. (These counts also include firms solely producing hammocks for infants as well. However, under the standard proposed by the Commission, most hammock products will no longer be able to conform. ASTM has started working on a new standard to cover these products.) Nine firms (19 percent) are domestic importers, 28 firms (58 percent) are domestic manufacturers, and 10 firms (21 percent) are foreign manufacturers. There is an additional domestic firm whose status as a manufacturer or importer could not be determined. Thirteen firms, including the firm whose means of supply could not be determined, supply infant hammocks to the United States market. (There is an additional hammock on the United States market whose supplier could not be determined, as well as a small cottage industry in knitted and crocheted infant hammocks.) The product lines for seven of these firms rely primarily or entirely on infant hammocks and related merchandise. (These determinations were made using information from Dun & Bradstreet and ReferenceUSAGov, as well as firm Web sites. Manufacturers include traditional manufacturers, as well as firms that send out their designs to be manufactured, and firms that import as well but are primarily manufacturers.)

Under Small Business Administration (SBA) guidelines, a manufacturer of bassinets or cradles is small if it has 500 or fewer employees, and an importer is considered small if it has 100 or fewer employees. Based on these guidelines, 22 of the domestic manufacturers and five of the domestic importers known to be supplying the United States market are small. The sizes of the four remaining domestic importers and two additional domestic manufacturers are unknown, but they are likely to be small as well, as is the firm whose supply source could not be determined. All of the firms supplying infant hammocks to the United States market are believed to be small. Two of these small firms are domestic manufacturers, four are domestic importers, six are foreign firms, and one is an unknown domestic firm. There are probably additional unknown small manufacturers and importers operating in the United States market.

JPMA, the major United States trade association that represents juvenile product manufacturers and importers, operates a voluntary certification program for several juvenile products. Products voluntarily submitted by manufacturers are tested against the appropriate ASTM standard and only passing products are allowed to display JPMA's Certification Seal. (*See http://www.jpma.org/pdfs/certfacts08.pdf* for more information.) Approximately 33 percent of firms supply bassinets/cradles to the United States market that have been JPMA certified as compliant with the current ASTM voluntary standard (16 firms). Two of these firms supply more than one relevant product category, where one category of products is JPMA certified and another is not. (For example, one firm has JPMA certified bassinets, but its play yards are not JPMA certified.) Additionally, one firm claims compliance although its products have not been certified by JPMA, and one firm has recently had its product removed from JPMA's list of certified products. Of the small domestic businesses (this includes firms suspected of being small as well those known to be small), 38 percent of manufacturers (nine of 24 firms) and 44 percent of importers (four of nine firms) have products that are ASTM compliant. This includes the small manufacturer that claims compliance with the ASTM standard, but is not part of the JPMA Certification Program, as well as the firms with only some product categories JPMA certified. (It should be noted that non-JPMA certified products will not necessarily fail to comply with the ASTM standard. Although there is currently no testing to support such an assumption for bassinets and cradles, testing of other products has revealed a pattern of non-correlation.)

2. Compliance Requirements of the Proposed Rule

Several of the recommended modifications and new requirements to the standard would be little to no burden on manufacturers or importers. The developmental limit modification (limiting the product use to when a child is able to push up on hands or knees), as well as the changes to suffocation warnings, would only require changes to instructional literature and packaging. The clarifications to what is included and excluded from the definition of the product would effectively eliminate some products from the scope of the proposed standard. This would exclude some firms from compliance requirements entirely, while reducing the number of products for others. As discussed herein, however, the inclusion of infant hammocks will have a substantial effect on many of these suppliers. The possible need to eliminate product restraints would only affect a few firms and the impact would be minimal. (It is possible that the lack of restraints could reduce product desirability from the consumer's perspective. However, this effect would be felt equally across all firms and is not expected to cause a significant reduction in demand for these products as a whole. The Commission believes that restraints are unnecessary for infants who are lying on a flat surface and could pose a strangulation hazard.)

Double action release mechanisms are typically used with multi-use products to convert a rocking bassinet to a stationary one. The expansion of locking and latching mechanism tests to cover double action release mechanisms, as well as the addition of stability testing with these locks engaged, are intended to resist collapsing or movement. There have been several cases where locking mechanisms have failed which caused the infant to roll and press up against the side or corner of the product, posing a suffocation hazard. (*See* Memorandum from Risana Chowdhury, EPI, Directorate for Epidemiology, dated February 3, 2010, Subject: Bassinets, Cradles, and Infant Hammocks-Related Deaths, Injuries and Potential Injuries; 2006–Present. It should be noted that it is unclear how many of these lock failures were double action release mechanisms.) This modification is not expected to pose a substantial burden on firms. However, it is possible that a few firms might have to make product modifications to comply. This would most likely take the form of improved locking/latching mechanisms.

Expanding spacing requirements to openings in soft-sided products could have a substantial effect on a small number of firms. Where products cannot pass the new requirements, substantial modifications and product redevelopment are likely. However, the Commission believes that the severity of the incidents involving these types of products and the recalls that resulted strongly support adding this requirement to the proposed standard.

There are currently no maximum requirements for rocking or rest angles on products intended to rock or swing. Tilting issues have resulted in suffocation hazards similar to those of locking mechanism failures. It is believed that adding maximum angle requirements to the proposed standard could reduce future incidents, while affecting only a small number of firms. The fact that these requirements are already a part of non-United States safety standards indicates that compliance has not proven difficult. However, it is possible that a few firms might require product modifications to achieve compliance with these new requirements.

The maximum sleep surface angle requirement and test is primarily aimed at incidents involving bassinet/play yard combination products. These incidents suggest that products with sloped surfaces or mattresses with multiple seams could pose a suffocation hazard. (*See* Memorandum from Han Lim, ESME, Directorate for Engineering Sciences, dated February 16, 2010, Subject: Engineering Assessment of ASTM F 2194–07 a $^{\varepsilon 1}$, Standard Consumer Safety Specification for Bassinets and Cradles; *see also* Memorandum from Risana Chowdhury, EPI, Directorate for Epidemiology, dated February 3, 2010, Subject: Bassinets, Cradles and Infant Hammocks-Related Deaths, Injuries and Potential Injuries; 2006–Present.) There are numerous such combination products on the market, but only a few known suppliers; therefore, this requirement could require product modifications (and possibly product redesign) by a few firms.

The rock/rest angles and sleep surface angles are likely to disproportionately affect most of the thirteen infant hammock suppliers. Infant hammocks typically hang from a standing base and rock naturally. Most have sleep surfaces that curve, molding to an infant's body.

However, two infant hammock suppliers have flat sleep surfaces. These two firms are not expected to require further modifications to comply with the recommended sleep surface angle requirement, and it is likely that they will be able to meet the rock/rest angle requirements inexpensively, with known fixes running no more than $5 per unit. For example, they could add a clipping mechanism that has been recently developed to limit the swing angle for hammocks involved in product recalls. Alternatively, they may be able to change the number and placement of the ties from which the hammock hangs.

For the remaining eleven firms supplying infant hammocks, even though it would be possible to inexpensively modify their products to meet both the rock/rest angle and sleep surface angle requirements, such modifications would change their products too extensively to remain in the market. A niche market exists among parents with colicky babies for hammocks that curve around babies' bodies and rock naturally. The suppliers, both manufacturers and importers, are unlikely to make even inexpensive modifications to meet the requirements as proposed. Any known fix would eliminate their niche market, thereby eliminating demand for their products, and may drive them out of business.

3. Impact of the Proposal on Small Business

There are approximately 48 firms currently known to be marketing bassinets, cradles, and/or infant hammocks in the United States. Four are large domestic manufacturers and ten are foreign manufacturers or importers. The impact on the remaining 34 small firms—24 small domestic manufacturers and 9 small domestic importers (one of these firms produces only hammocks, while another produces both hammocks and bassinets)—is the focus of the remainder of this analysis. Of these small firms, two domestic manufacturers and four domestic importers (as well as the unknown domestic firm) supply infant hammocks.

Small Manufacturers (Other than Infant Hammock Manufacturers). The impact of the proposed standard (if finalized) on small manufacturers will differ based on whether they are currently compliant with the voluntary ASTM standard. For the 15 firms that are not complaint with the current voluntary standard, the proposed standard could have substantial impact because their products would most likely have to be redesigned. Product development costs include product design, development and marketing staff time, product testing, and focus group expenses. These costs can be high, but they can be treated as new product expenses and amortized over time, as can other one-time costs such as the retooling of manufacturing equipment. There also may be increased costs of production, particularly if modifications to structural integrity are required, which could include additional raw materials. This could potentially increase shipping costs as well. The actual cost of such an effort is unknown, but could be substantial for some firms, particularly those that rely primarily or entirely on bassinets/cradles and related products, such as bedding.

The impact on most of the nine firms that comply with the current voluntary standard is expected to be less substantial. The majority of modifications recommended by the Commission are expected to have only minor effects on small manufacturers. There are, however, three recommended changes (rocking/rest angles, sleep surface angle, and spacing requirements for soft-sided products) that could require product modifications. While these requirements may affect only a few firms, they may require product redevelopment, which has the potential to impose unknown but substantial, costs. The Commission seeks comment on the cost associated with these product modifications.

Even though the proposed standard could potentially affect a few small firms significantly, the costs associated with compliance could be gradually recouped over the sales of numerous units. Bassinets and cradles are unique products designed to provide a sleeping environment for very young children that is smaller and more like the womb. Therefore, other sleeping products are unlikely to be suitable substitutes for these products, allowing firms to pass at least some costs on to consumers and to still compete effectively. (There is also the possibility, however, that some consumers may instead use unsuitable sleeping environments, such as bouncers, as substitutes.)

The scenario just described assumes that only those firms that are JPMA-certified or claim ASTM compliance will meet the voluntary standard's requirements. This is not necessarily the case. CPSC has identified many cases where products not certified by JPMA do comply with the relevant ASTM standard; however, there is insufficient evidence of this for bassinets/cradles to quantify this impact. Additionally, the effect of the new and modified requirements may be less substantial than just outlined to the extent that some products may already comply with non-United States standards with some more rigorous requirements. For example, a product that complies with the Australian standard would pass the proposed rock angle requirement. However, there is insufficient information to quantify this effect.

Small Importers (Other than Infant Hammock Importers). Four of the nine small importers are compliant with the current voluntary standard. Two of these compliant importers supply infant hammocks exclusively. Of the remaining five non-compliant importers, two supply infant hammocks

exclusively. Therefore, if their existing supplier does not come into compliance with the proposed standard, these firms will need to find an alternate source of bassinets and cradles. Manufacturers are likely to pass at least some costs onto importers, making the bassinets/cradles more expensive. (These products would also be expected to be higher quality given the additional safety requirements.) However, importers can follow suit, passing some costs on to consumers. Even if importers responded to the rule by discontinuing the import of their non-complying bassinets and cradles, either replacing them with a complying product or another juvenile product, deciding to import an alternative product would be a reasonable and realistic way to offset any lost revenue given that most import a variety of products. To the extent that some firms may comply with the current voluntary standard or one or more of the new/modified requirements in the proposed standard, the impact of the proposed rule would be lower.

Small Hammock Manufacturers and Importers. The impact of the proposed standard on small hammock manufacturers and importers depends primarily on two factors: (1) Whether their hammocks have a flat sleep surface; and (2) whether their product line consists (primarily or entirely) of infant hammocks and related products. If a supplier's hammocks already have a flat sleep surface (as is the case with one known small domestic manufacturer), it is likely that it will modify its existing infant hammocks. This modification can be made inexpensively based upon a recent product recall fix that minimized the rock/rest angle of these types of products. (The known fixes are unlikely to cost more than $5 per unit.) However, the remaining small infant hammock suppliers, both manufacturers and importers, are unlikely to make even inexpensive modifications to meet the proposed requirements. Doing so would eliminate their niche market for naturally-rocking, flexible-sleep-surface products intended to calm colicky babies. Among the six small domestic firms supplying this niche market, four small importers and one unknown firm rely entirely (or almost entirely) upon infant hammocks and related products. Therefore, the proposed rule, if finalized, may be likely to put these firms out of business. The remaining small domestic manufacturer, however, does supply other products, and the likely elimination of infant hammocks from its product line is not expected to drive it out of business, although it is likely to have a substantial effect on its sales revenue. The Commission seeks comment on the effect of the proposed modifications to the standard on small hammock manufacturers and importers.

3. *Alternatives.* Under section 104 of the CPSIA, the primary alternative that would reduce the impact on small entities is to make the voluntary standard mandatory with no additions or modifications. Adopting the current voluntary standard without any changes could potentially reduce the costs for nine of the 24 small manufacturers and four of the nine small importers who already comply with the voluntary standard. However, the actual reduction in impact for these firms is likely to be smaller, since many would likely not require substantial changes even under the proposed standard. For the six small domestic firms supplying infant hammocks to the United States market, making the current voluntary standard mandatory with no modifications would substantially reduce the impact. It would be likely to prevent five firms from going out of business, while the sixth might be spared a substantial decrease in sales revenue. It also should be noted that eliminating the market for potentially hazardous infant hammocks intended to lull colicky babies may have the unintended consequence of leading caregivers to use similar products intended for older children instead, thereby creating a potentially new hazard.

4. Conclusion of Initial Regulatory Flexibility Analysis

It is possible that the proposed standard, if finalized, could have a significant impact on a few small firms. Most firms supplying bassinets and/or cradles to the United States market are not JPMA-certified as compliant with ASTM's voluntary standard and may therefore require at least some product modifications to achieve compliance. (To the extent that some of the products not certified by JPMA may still comply, the impact will be reduced.) For these firms, as well as a few of those who are JPMA-certified, additional changes to meet the more significant recommended requirements of the proposed standard may be required as well. The extent of these costs is unknown, but since product redevelopment would likely be necessary, it is possible that the costs could be large for some of the firms. However, at least some of these costs are expected to be passed on to consumers without a reduction in the firms' ability to compete due to the unique features associated with these products. The Commission seeks comment on what these costs may be, whether they may be passed on to the consumer, and how these costs will impact small businesses.

The small firms likely to be most significantly impacted by the staff-recommended rule, however, are those supplying infant hammocks intended for colicky babies. The majority of these firms have focused their entire product line on these goods and the required modifications would eliminate demand for their products, and may drive them out of business.

I. Environmental Considerations

The Commission's regulations provide a categorical exemption for the Commission's rules from any requirement to prepare an environmental assessment or an environmental impact statement as they "have little or no potential for affecting the human environment." 16 CFR 1021.5(c)(2). This proposed rule falls within the categorical exemption.

J. Paperwork Reduction Act

This proposed rule contains information collection requirements that are subject to public comment and review by the Office of Management and Budget (OMB) under the Paperwork Reduction Act of 1995 (44 U.S.C. 3501–3520). We describe the provisions in this section of the document with an estimate of the annual reporting burden. Our estimate includes the time for reviewing instructions, searching existing data sources, gathering and maintaining the data needed, and completing and reviewing each collection of information.

We particularly invite comments on: (1) Whether the collection of information is necessary for the proper performance of the CPSC's functions, including whether the information will have practical utility; (2) the accuracy of the CPSC's estimate of the burden of the proposed collection of information, including the validity of the methodology and assumptions used; (3) ways to enhance the quality, utility, and clarity of the information to be collected; and (4) ways to minimize the burden of the collection of information on respondents, including through the use of automated collection techniques, when appropriate, and other forms of information technology.

Title: Safety Standard for Bassinets and Cradles.

Description: The proposed rule would require each bassinet and cradle to comply with ASTM F 2194–07a$^{\varepsilon 1}$, "Standard Consumer Safety Specification for Bassinets and Cradles." Sections 8 and 9 of ASTM F 2194–07a$^{\varepsilon 1}$

contain requirements for marking and instructional literature.

Description of Respondents: Persons who manufacture bassinets and cradles.

We estimate the burden of this collection of information as follows:

TABLE 1—ESTIMATED ANNUAL REPORTING BURDEN

16 CFR section	Number of respondents	Frequency of responses	Total annual responses	Hours per response	Total burden hours
1218.2(a)	30	7	30	0.5	105

There are no capital costs or operating and maintenance costs associated with this collection of information.

Our estimates are based on the following:

Proposed § 1218.2(a) would require each bassinet and cradle to comply with ASTM F 2194–07a$^{\varepsilon 1}$. Sections 8 and 9 of ASTM F 2194–07a$^{\varepsilon 1}$ contain requirements for marking and instructional literature that are disclosure requirements, thus falling within the definition of "collections of information" at 5 CFR 1320.3(c).

Section 8.1.1 of ASTM F 2194–07a$^{\varepsilon 1}$ requires that the name and either the place of business (city, State, and mailing address, including zip code) or telephone number, or both of the manufacturer, distributor, or seller be clearly and legibly marked on each product and its retail package. Section 8.1.2 of ASTM F 2194–07a$^{\varepsilon 1}$ requires that a code mark or other means that identifies the date (month and year as a minimum) of manufacture" be clearly and legibly marked on "each product and its retail package. In both cases, the information must be placed on both the product and the retail package.

There are 48 known firms supplying bassinets and/or cradles to the United States market. Eighteen of the 48 firms are known to already produce labels that comply with sections 8.1.1 and 8.1.2 of the standard, so there would be no additional burden on these firms. The remaining 30 firms are assumed to already use labels on both their products and their packaging, but would need to make some modifications to their existing labels. The estimated time required to make these modification is about 30 minutes per model. Each of these firms supplies an average of 7 different models of bassinets/cradles, therefore, the estimated burden hours associated with labels is 30 minutes × 30 firms × 7 models per firm = 6,300 minutes or 105 annual hours.

The Commission estimates that hourly compensation for the time required to create and update labels is $27.78 (Bureau of Labor Statistics, September 2009, all workers, goods-producing industries, Sales and office, Table 9). Therefore, the estimated annual cost associated with the Commission recommended labeling requirements is approximately $2,917 ($27.78 per hour × 105 hours = $2,916.90, which we have rounded up to $2,917).

Section 9.1 of ASTM F 2194–07a$^{\varepsilon 1}$ requires instructions to be supplied with the product. Bassinets and cradles are products that generally require some installation and maintenance, and products sold without such information would not be able to successfully compete with products supplying this information. Under OMB's regulations (5 CFR 1320.3(b)(2)), the time, effort, and financial resources necessary to comply with a collection of information that would be incurred by persons in the "normal course of their activities" are excluded from a burden estimate where an agency demonstrates that the disclosure activities needed to comply are "usual and customary." Therefore, because the CPSC is unaware of bassinets and cradles that: (a) Generally require some installation, but (b) lack any instructions to the user about such installation, we tentatively estimate that there are no burden hours associated with the instruction requirement in section 9.1 of ASTM F 2194–07a$^{\varepsilon 1}$ because any burden associated with supplying instructions with a bassinet or cradle would be "usual and customary" and not within the definition of "burden" under OMB's regulations.

Based on this analysis, the requirements of the Commission-recommended bassinet and cradle rule would impose a burden to industry of 105 hours at a cost of $2,917 annually.

In compliance with the Paperwork Reduction Act of 1995 (44 U.S.C. 3507(d)), we have submitted the information collection requirements of this rule to OMB for review. Interested persons are requested to fax comments regarding information collection by May 28, 2010, to the Office of Information and Regulatory Affairs, OMB (*see* **ADDRESSES**).

K. Preemption

Section 26(a) of the CPSA, 15 U.S.C. 2075(a), provides that where a "consumer product safety standard under [the CPSA]" is in effect and applies to a product, no State or political subdivision of a State may either establish or continue in effect a requirement dealing with the same risk of injury unless the State requirement is identical to the Federal standard. (Section 26(c) of the CPSA also provides that States or political subdivisions of States may apply to the Commission for an exemption from this preemption under certain circumstances.) Section 104(b) of the CPSIA refers to the rules to be issued under that section as "consumer product safety rules," thus implying that the preemptive effect of section 26(a) of the CPSA would apply. Furthermore, in *Natural Resources Defense Council* v. *CPSC,* 597 F. Supp. 2d 370 (S.D. NY 2009), the court held that "[d]esignating the phthalate prohibitions [in section 108 of the CPSIA] as consumer product safety standards brings them within a well established statutory preemption scheme [of section 26(a) of the CPSA]." Therefore, a rule issued under section 104 of the CPSIA will invoke the preemptive effect of section 26(a) of the CPSA when it becomes effective.

L. Certification

Section 14(a) of the Consumer Product Safety Act ("CPSA") imposes the requirement that products subject to a consumer product safety rule under the CPSA, or to a similar rule, ban, standard, or regulation under any other act enforced by the Commission, be certified as complying with all applicable CPSC-enforced requirements. 15 U.S.C. 2063(a). Such certification must be based on a test of each product or on a reasonable testing program or, for children's products, on tests on a sufficient number of samples by a third-party conformity assessment body accredited by the Commission to test according to the applicable requirements. As discussed in Section K, section 104(b)(1)(B) of the CPSIA refers to standards issued under that section, such as the rule for bassinets and cradles being proposed in this notice, as "consumer product safety standards." Furthermore, the designation as consumer product safety standards subjects such standards to certain sections of the CPSA, such as

section 26(a), regarding preemption. By the same reasoning, such standards would also be subject to section 14 of the CPSA. Therefore, any such standard would be considered to be a consumer product safety rule to which products subject to the rule must be certified.

In addition, the CPSIA is another act enforced by the Commission, and the standards issued under section 104(b)(1)(B) of the CPSIA are similar to consumer product safety rules. For this reason also, bassinets and cradles will need to be tested and certified as complying with the safety standard when it becomes effective. Because bassinets and cradles are children's products, they must be tested by a third-party conformity assessment body accredited by the Commission. In the future, the Commission will issue a notice of requirements to explain how laboratories can become accredited as a third-party conformity assessment body to test to the new safety standard. (Bassinets and cradles also must comply with all other applicable CPSC requirements, such as the lead content and phthalate content requirements in sections 101 and 108 of the CPSIA, and the tracking label requirement in section 14(a)(5) of the CPSA, and the consumer registration form requirements in section 104 of the CPSIA.)

List of Subjects in 16 CFR 1218

Consumer protection, Imports, Incorporation by reference, Infants and Children, Labeling, Law enforcement, and Toys.

Therefore, the Commission proposes to amend Title 16 of the Code of Federal Regulations by adding a new part 1218 to read as follows:

PART 1218—SAFETY STANDARD FOR BASSINETS AND CRADLES

Sec.

1218.1 Scope, application and effective date.
1218.2 Requirements for bassinets and cradles.

Authority: The Consumer Product Safety Improvement Act of 2008, Pub. L. 110–314, § 104, 122 Stat. 3016 (August 14, 2008).

§ 1218.1 Scope, application and effective date.

This part establishes a consumer product safety standard for bassinets and cradles manufactured or imported on or after (insert date 6 months after date of publication of a final rule in the **Federal Register**).

§ 1218.2 Requirements for bassinets and cradles.

(a) Except as provided in paragraph (b) of this section, each bassinet and cradle must comply with all applicable provisions of ASTM F 2194–07a$^{\varepsilon 1}$, Standard Consumer Safety Specification for Bassinets and Cradles, approved October 1, 2007. The Director of the Federal Register approves this incorporation by reference in accordance with 5 U.S.C. 552(a) and 1 CFR part 51. You may obtain a copy from ASTM International, 100 Bar Harbor Drive, P.O. Box 0700, West Conshohocken, PA 19428; *http://www.astm.org.* You may inspect a copy at the Office of the Secretary, U.S. Consumer Product Safety Commission, Room 502, 4330 East West Highway, Bethesda, MD 20814, telephone 301–504–7923, or at the National Archives and Records Administration (NARA). For information on the availability of this material at NARA, call 202–741–6030, or go to: *http://www.archives.gov/federal_register/code_of_federal_regulations/ibr_locations.html.*

(b) Comply with the ASTM F 2194–07a$^{\varepsilon 1}$ standard with the following additions or exclusions:

(1) Instead of complying with section 1.3 of ASTM F 2194–07a$^{\varepsilon 1}$, comply with the following:

(i) 1.3 This consumer safety performance specification covers products intended to provide sleeping accommodations only for infants up to approximately 5 months of age or when the child begins to push up on hands and knees, whichever comes first. Products used in conjunction with an infant swing are not covered by this specification.

(ii) [Reserved]

(2) Following section 2.3 of ASTM F 2194–07a$^{\varepsilon 1}$, use the following figure:

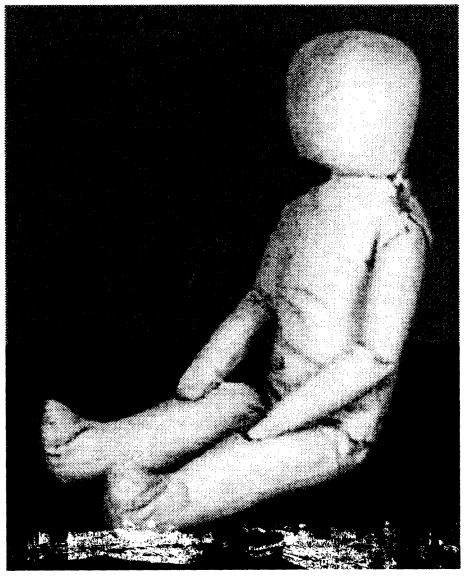

FIGURE 1A - Newborn CAMI Dummy

(ii) [Reserved]

(3) Instead of complying with section 3.1.1 of ASTM F 2194–07a$^{\varepsilon 1}$, comply with the following:

(i) 3.1.1 *Bassinet/cradle, n*—small bed designed exclusively to provide sleeping accommodations for infants

supported by free standing legs, a wheeled base, a rocking base, or which can swing relative to a stationary base. Products such as swings, full and non-full size cribs, hand carrying baskets, and travel beds are not included, unless the product is a bassinet/cradle attachment per the definition in Section 3.1.2.

(ii) [Reserved]

(4) Instead of complying with section 3.1.2 of ASTM F 2194–07a$^{\varepsilon 1}$, comply with the following:

(i) 3.1.2 *bassinet/cradle accessory, n*—accessory with a rigid frame that attaches to non-full size crib, play yard, or other base unit designed to convert the accessory into a bassinet/cradle.

(ii) [Reserved]

(5) In addition to section 3.1.11 of ASTM F 2194–07a$^{\varepsilon 1}$, comply with the following:

(i) 3.1.12 *Double action release mechanism, n*—mechanism requiring either two consecutive actions, the first of which must be maintained while the second is carried out or two separate and independent single action locking mechanisms that must be activated simultaneously to fully release.

(ii) 3.1.13 *removable cover, n*—a fabric cover, containing snaps or other fasteners such as zippers, Velcro, or buttons used to attach to a bassinet/cradle frame that requires consumer action as a step for removal or adjustment.

(iii) 3.1.14 *Maximum deflection angle, n*—the maximum rock/swing angle measurement allowed by the product design in the manufacturer's use position in the manner normally associated with rocking/swinging and intended by the manufacturer when tested in accordance with 7.8.

(iv) 3.1.15 *Rest angle, n*—the resulting angle measurement of bassinet/cradle sleeping surface or tilt angle of the bassinet/cradle bed after the maximum deflection angle is applied and released and the product has come to a complete rest when tested in accordance with 7.8.

(v) 3.1.16 *Flatness angle, n*—the resulting angle measurement of the sleep support surface or tilt angle of the bassinet/cradle bed when a compression force is applied to the chest of the CAMI dummy in accordance with 7.9.

(6) In addition to section 4.5 of ASTM F 2194–07a$^{\varepsilon 1}$ comply with the following:

(i) 4.6 Angle measurements shall be obtained using a digital inclinometer capable of 0.1° minimum resolution.

(ii) 4.7 Equipment—Force gauge with a range of 0 to 25 lbf (110N), with a maximum tolerance of ± 0.25 lbf (1.11N) or a range of 0 to 50 lbf (222N) with a maximum tolerance of ± 0.25 lbf (1.11N). A calibration interval shall be maintained for the force gauges which will ensure that the accuracy does not drift beyond the stated tolerances.

(7) In addition to section 5.12 of ASTM F 2194–07a$^{\varepsilon 1}$ comply with the following:

(i) 5.13 *Restraints*— The bassinet shall not include any restraints system which requires action on the part of the caregiver to secure the restraint.

(ii) [Reserved]

(8) Instead of complying with section 6.1 of ASTM F 2194–07a$^{\varepsilon 1}$, comply with the following:

(i) 6.1 *Spacing of Rigid and Fabric-Sided Bassinet/Cradle Components or Bassinet/Cradle attachment Components*—Spacing must comply with 16 CFR Part 1509 Section 1509.4 when tested according to 7.1 and 7.10.

(ii) [Reserved]

(9) Instead of complying with section 6.4 of ASTM F 2194–07a$^{\varepsilon 1}$, comply with the following:

(i) 6.4 *Stability*—A product in all manufacturers' recommended use positions, including positions where the locks are engaged for preventing rocking/swinging motion of the sleeping surface, shall not tip over and shall retain the CAMI Infant Dummy, Mark II, when subjected to the test described in 7.4.

(ii) [Reserved]

(10) In addition to section 6.6 of ASTM F 2194–07a$^{\varepsilon 1}$ comply with the following:

(i) 6.7 *Rock/Swing Angle*—Bassinets or cradles that incorporate a rocking/swinging feature shall meet the following:

(A) 6.7.1 Maximum deflection angle measurement on any reading shall not exceed 20° when tested in accordance with 7.8.

(B) 6.7.2 The arithmetic mean of the rest angle measurements shall not exceed 5° when tested in accordance with 7.8.

(ii) 6.8: *Bassinet/Cradle Surface*— The angle of the bassinet or cradle sleeping support surface or the tilt angle of the bassinet/cradle bed shall not be greater than 5° when tested in accordance with 7.9.

(iii) 6.9 *Fabric-Sided Enclosed Openings*—For bassinets or cradles with fabric sides, the fabric shall not release and form a completely bounded opening that allows the complete passage of the torso probe (Figure 3A) when tested in accordance with Section 7.10.

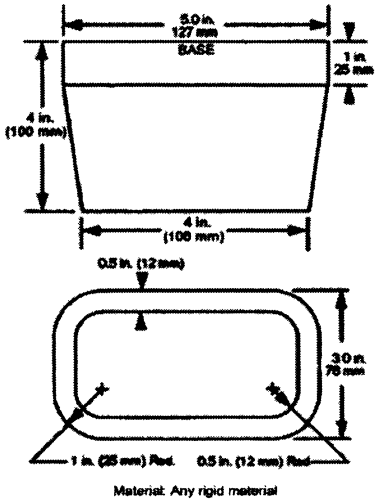

Figure 3A – Test Probe for Fabric Sided Testing

(11) In addition to section 7.7 of ASTM F 2194–07a$^{\varepsilon 1}$ comply with the following:

(i) 7.8 *Rock/Swing Angle Test:*

(A) 7.8.1 *Side to Side Rock/Swing Test*—for bassinets/cradles that have a side-to-side rocking/swinging feature.

(B) 7.8.1.1 Assemble bassinet/cradle in accordance with manufacturer's instructions and, if necessary, place the bassinet/cradle in rocking/swinging mode.

(C) 7.8.1.2 Place the bassinet/cradle and the inclinometer on a flat level horizontal plane (0° ± 0.5°) to establish a reference plane. Zero the inclinometer.

(D) 7.8.1.3 Disengage any locking mechanisms designed to prevent the unit from rocking/swinging, per the manufacturer's instructions.

(E) 7.8.1.4 Place the CAMI Infant Dummy, MARK II belly up, with both arms contacting the torso, and the right arm touching the left side wall in the bassinet cradle. *See* Figure 4A.

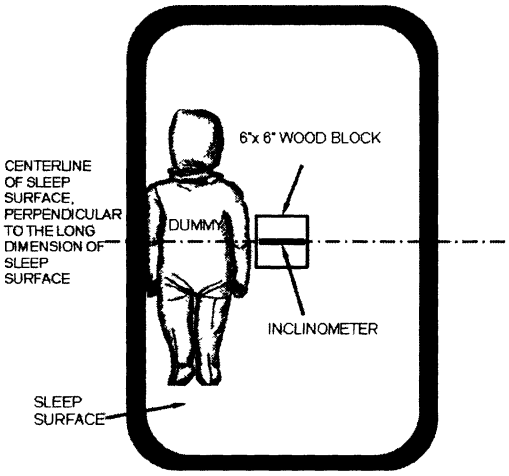

Figure 4A: Top View of CAMI Dummy and Inclinometer Placed in the Sleep Surface for the Side-to-Side Swing Test

(F) 7.8.1.5 Manually deflect and hold the bassinet/cradle to the maximum side-to-side rock/swing angle allowed by the product design in the manufacturer's use position in the manner normally associated with rocking/swinging and intended by the manufacturer. Record the maximum deflection angle.

(G) 7.8.1.6 Release the bassinet/cradle and allow it to come to rest unassisted.

(H) 7.8.1.7 Place the 6 in. x 6 in. wood block (ref. Section 7.3.2) less than 1 in. from the dummy, where the horizontal center of the block is in line with the centerline of the mattress bed perpendicular to the head-to-toe axis of the dummy. *See* Figure 4A. If a block cannot be placed in the prescribed location inside the mattress bed area due to mattress size constraints, dummy position, or if the mattress is substantially curved, then mount a 1 in. aluminum angle (ref. Section 7.4.2) on top of the rigid bassinet frame. *See* Figure 4B.

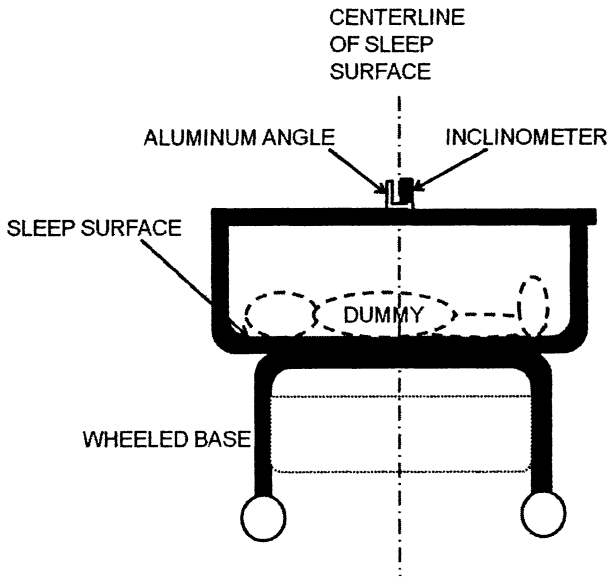

Figure 4B: Side View of CAMI Dummy Placed in the Sleep Surface with the Inclinometer and Aluminum Angle Mounted on Top of the Product

(I) 7.8.1.8 Place the inclinometer on the top center of the 6 in. x 6 in. wood block or aluminum angle and record the resulting angle.

(J) 7.8.1.9 Repeat steps 7.8.1.2 to 7.8.1.8 four additional times. Record each side-to-side maximum deflection angle and each resulting side-to-side rest angle measurement. Calculate the arithmetic mean of the five side-to-side rest angle measurements.

(K) 7.8.1.10 Repeat steps 7.8.1.2 to 7.8.1.9 except place the CAMI infant Dummy, Mark II belly up, with both arms contacting the torso, and the left arm touching the right side wall in the bassinet/cradle.

(L) 7.8.1.11 Repeat steps 7.8.1.2 to 7.8.1.10 using a CAMI Newborn Dummy.

(M) 7.8.2 *Front-to-Back Rock/Swing Test*—for bassinets/cradles that have a front-to-back (head-to-toe) rocking/swinging feature.

(N) 7.8.2.1 Assemble bassinet/cradle in accordance with manufacturer's instructions and, if necessary, place the bassinet/cradle in the front-to-back rocking/swinging mode.

(O) 7.8.2.2 Place the bassinet/cradle and the inclinometer on a flat level horizontal plane ($0° \pm 0.5°$) to establish a test plane. Zero the inclinometer.

(P) 7.8.2.3 Disengage any locking mechanisms designed to prevent the unit from rocking/swinging, per the manufacturer's instructions.

(Q) 7.8.2.4 Place the CAMI Infant Dummy, Mark II belly up, with both arms contacting the torso, and the crown of the dummy's head touching the inside wall at one end of the sleep surface and the dummy's head-to-toe centerline is in line with the centerline perpendicular to the short dimension of the sleep surface. *See* Figure 4C.

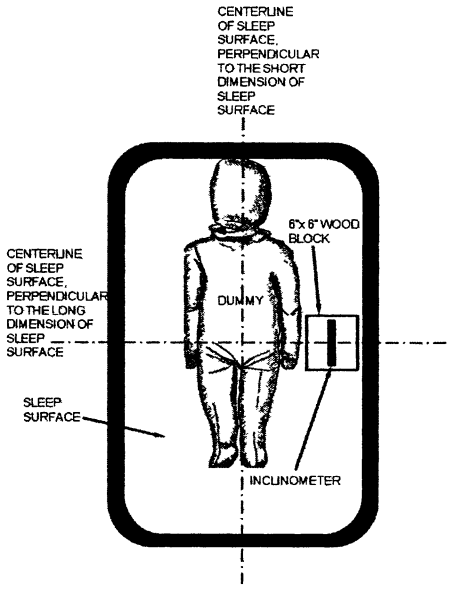

Figure 4C: Top View of CAMI Dummy and Inclinometer Placed in the Sleep Surface for the Front-to-Back Swing Test

(R) 7.8.2.5 Manually deflect and hold the bassinet/cradle to the maximum rock/swing angle in the front-to-back direction allowed by the product design in the manufacturer's use position in the manner normally associated with rocking and intended by the manufacturer. Record the maximum rock/swing angle.

(S) 7.8.2.6 Release the bassinet/cradle and allow it to come to rest unassisted.

(T) 7.8.2.7 Place the 6 in. x 6 in. wood block (ref. Section 7.3.2) where the horizontal centerline of the wood block is in line with the horizontal centerline of the sleep surface. *See* Figure 4. If the wood block cannot be placed in the prescribed location on the mattress bed area due to mattress size constraints, dummy position, or if the mattress is substantially curved, then mount a 1 in. aluminum angle (ref. Section 7.4.2) spanning the top of the rigid bassinet frame in a direction parallel to the long dimension of the bassinet.

(U) 7.8.2.8 Place the inclinometer on the top center of the 6 in. x 6 in. wood block or aluminum angle. Record the resulting rest angle.

(V) 7.8.2.9 Repeat steps 7.8.2.2 to 7.8.2.8 four additional times. Record each front-to-back maximum deflection angle and each resulting rest angle measurement. Calculate the arithmetic mean of the five rest angle measurements.

(W) 7.8.2.10 Repeat 7.8.2.2 to 7.8.2.9 with the CAMI Dummy, Mark II feet touching the inside at one end of the sleep surface and the dummy's torso centerline in line with the centerline perpendicular to the short dimension of the sleep surface.

(X) 7.8.2.11 Repeat 7.8.2.2 to 7.8.2.10 with the Newborn CAMI Dummy.

(ii) 7.9 *Bassinet/Cradle Flatness Angle Test*

(A) 7.9.1 Disable the rocking/swinging feature if the product is equipped with such a feature. Place the CAMI Infant Dummy, Mark II belly up, on the sleep surface in the location most prone to creating a depression, slope, or tilt (*e.g.*, near a seam in the mattress, in a corner, *etc.*).

(B) 7.9.2 Place the 6 in. x 6 in. wood block (ref. Section 7.3.2) on the chest of the dummy and apply a 10.0 ± 0.5 lb compression force within 2 seconds with a force gauge. Discontinue applying the force.

(C) 7.9.3 Place the 6 in. x 6 in. wood block (ref. Section 7.3.2) less than 1 in. from the dummy, where the horizontal center of the block is in line with the horizontal centerline of the dummy. If the wood block cannot be placed inside the sleep surface of a rocking/swinging product due to mattress size constraints, dummy position, or if the mattress is substantially curved, then mount the 1 in. aluminum angle (ref. Section 7.4.2) on top of the rigid bassinet frame.

(D) 7.9.4 Record the resulting flatness angle along the dummy's head-to-toe axis and at 90° from the head-to-toe axis.

(E) 7.9.5 Repeat steps 7.9.1 to 7.9.4 four additional times. Record each angle measurement and calculate the arithmetic mean of the five angle measurements in the head-to-toe direction and 90° from the head-to-toe axis.

(F) 7.9.6 If the dummy's height is equivalent to or less than the width of the sleep surface then rotate the dummy 90° and repeat steps 7.9.1 to 7.9.5. *See* Figure 4D.

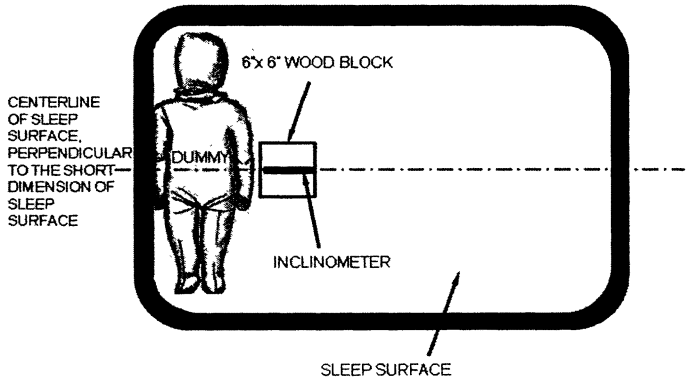

Figure 4D: Top View of CAMI Dummy and Inclinometer, Rotated 90º, Placed in the Sleep Surface for the Mattress Flatness Test

(G) 7.9.7 Repeat 7.9.1 to 7.9.6 with the Newborn CAMI Dummy.

(iii) 7.10 *Fabric Release Test Methods for Enclosed Openings.*

(A) 7.10.1 Assemble and place the bassinet/cradle in the manufacturers use position.

(B) 7.10.2 With the torso test probe attached to a force gauge, place the small end of the probe against the fabric inside wall of the product and any structural elements in any locations deemed most likely to fail.

(C) 7.10.3 Apply a 20 lb force to the probe over a period of 5 seconds and hold for an additional 5 seconds.

(D) 7.10.4 Upon completion of 7.10.3, if an opening occurs in a location, other than the location being tested, release the probe from the original test location and repeat 7.10.3 at this additional location without adjusting the fabric.

(E) 7.10.5 If the product has a removable cover, unfasten all fasteners and/or snaps and repeat 7.10.2 to 7.10.4.

(F) 7.10.6 Repeat 7.10.1 to 7.10.5 in all manufacturers recommended use positions. For multiple use products, the test shall be performed in all possible use modes.

(12) Instead of complying with section 8.3.1 of ASTM F 2194–07a$^{\varepsilon 1}$, comply with the following:

(i) 8.3.1 In the warning statements, the safety alert symbol

and the word WARNING shall precede the warning statements at each location where warnings are provided and shall not be less than 0.2 in. (5 mm) high. The remainder of the text shall be in letters not less than 0.1 in. (2.5 mm) high except as specified in 8.4.2.

(ii) [Reserved]

(13) Instead of complying with section 8.4.2.1 of ASTM F 2194–07a$^{\varepsilon 1}$, comply with the following:

(i) Infants have suffocated in gaps between extra padding and side of the bassinet/cradle and on soft bedding. Use only the pad provided by manufacturer. NEVER add a pillow, comforter, or another mattress for padding.

(ii) [Reserved]

(14) In addition to the changes to ASTM F 2194–07a$^{\varepsilon 1}$ in paragraph (b)(13), comply with the following:

(i) 8.4.2.2 The words "SUFFOCATION HAZARD" shall be bold face type not less than 0.2 in.
(5 mm) high. The words "Infants have suffocated" shall be in characters whose upper case is not less than 0.16 in.
(4 mm) high. The remainder of the warning statement shall be standard type style whose upper case shall be at least 0.1 in. (2.5 mm) high.

(ii) [Reserved]

Dated: March 30, 2010.

Alberta Mills,

Acting Secretary, U.S. Consumer Product Safety Commission.

[FR Doc. 2010–7667 Filed 4–27–10; 8:45 am]

BILLING CODE 6355–01–P

DEPARTMENT OF TRANSPORTATION

National Highway Traffic Safety Administration

23 CFR Parts 1200 and 1300

[Docket No. NHTSA–2010–0054]

Federal Motor Vehicle Safety Standards; Small Business Impacts of Motor Vehicle Safety

AGENCY: National Highway Traffic Safety Administration (NHTSA), Department of Transportation (DOT).

ACTION: Notice of regulatory review; Request for comments.

SUMMARY: NHTSA seeks comments on the economic impact of its regulations on small entities. As required by section 610 of the Regulatory Flexibility Act, we are attempting to identify rules that may have a significant economic impact on a substantial number of small entities. We also request comments on ways to make these regulations easier to read and understand. The focus of this notice is rules that specifically relate to passenger cars, multipurpose passenger vehicles, trucks, buses, trailers, incomplete vehicles, motorcycles, and motor vehicle equipment.

DATES: You should submit comments early enough to ensure that Docket Management receives them not later than June 28, 2010.

ADDRESSES: You may submit comments [identified by DOT Docket ID Number NHTSA–2010–0054] by any of the following methods:

- *Federal eRulemaking Portal:* Go to *http://www.regulations.gov.* Follow the online instructions for submitting comments.
- *Mail:* Docket Management Facility: U.S. Department of Transportation, 1200 New Jersey Avenue, SE., West Building Ground Floor, Room W12–140, Washington, DC 20590–0001
- *Hand Delivery or Courier:* West Building Ground Floor, Room W12–140, 1200 New Jersey Avenue, SE., between 9 a.m. and 5 p.m. ET, Monday through Friday, except Federal holidays.
- *Fax:* 202–493–2251

Instructions: For detailed instructions on submitting comments and additional information see the Comments heading of the Supplementary Information section of this document. Note that all comments received will be posted without change to *http://*

www.regulations.gov, including any personal information provided. Please see the Privacy Act heading below.

Privacy Act: Anyone is able to search the electronic form of all comments received into any of our dockets by the name of the individual submitting the comment (or signing the comment, if submitted on behalf of an association, business, labor union, etc.). You may review DOT's complete Privacy Act Statement in the **Federal Register** published on April 11, 2000 (65 FR 19477–78) or you may visit *http://DocketsInfo.dot.gov.*

FOR FURTHER INFORMATION CONTACT: Juanita Kavalauskas, Office of Regulatory Analysis, Office of Regulatory Analysis and Evaluation, National Highway Traffic Safety Administration, U.S. Department of Transportation, 1200 New Jersey Avenue, SE., Washington, DC, 20590 (telephone 202–366–2584, fax 202–366–3189).

SUPPLEMENTARY INFORMATION:

I. Section 610 of the Regulatory Flexibility Act

A. Background and Purpose

Section 610 of the Regulatory Flexibility Act of 1980 (Pub. L. 96–354), as amended by the Small Business Regulatory Enforcement Fairness Act of 1996 (Pub. L. 104–121), requires agencies to conduct periodic reviews of final rules that have a significant economic impact on a substantial number of small business entities. The purpose of the reviews is to determine whether such rules should be continued without change, or should be amended or rescinded, consistent with the objectives of applicable statutes, to minimize any significant economic impact of the rules on a substantial number of such small entities.

B. Review Schedule

The Department of Transportation (DOT) published its Semiannual Regulatory Agenda on November 22, 1999, listing in Appendix D (64 FR 64684) those regulations that each operating administration will review under section 610 during the next 12 months. Appendix D contained DOT's 10-year review plan for all of its existing regulations. On November 24, 2008, NHTSA published in the **Federal Register** (73 FR 71401) a revised 10-year review plan for its existing regulations.

The National Highway Traffic Safety Administration (NHTSA, "we") has divided its rules into 10 groups by subject area. Each group will be reviewed once every 10 years, undergoing a two-stage process–an Analysis Year and a Review Year. For purposes of these reviews, a year will coincide with the fall-to-fall publication schedule of the Semiannual Regulatory Agenda. The newly revised 10-year plan will assess years 9 and 10 of the old plan in years 1 and 2 of the new plan. Year 1 (2008) began in the fall of 2008 and will end in the fall of 2009; Year 2 (2009) will begin in the fall of 2009 and will end in the fall of 2010; and so on.

During the Analysis Year, we will request public comment on and analyze each of the rules in a given year's group to determine whether any rule has a significant impact on a substantial number of small entities and, thus, requires review in accordance with section 610 of the Regulatory Flexibility Act. In each fall's Regulatory Agenda, we will publish the results of the analyses we completed during the previous year. For rules that have subparts, or other discrete sections of rules that do have a significant impact on a substantial number of small entities, we will announce that we will be conducting a formal section 610 review during the following 12 months.

The section 610 review will determine whether a specific rule should be revised or revoked to lessen its impact on small entities. We will consider: (1) The continued need for the rule; (2) the nature of complaints or comments received from the public; (3) the complexity of the rule; (4) the extent to which the rule overlaps, duplicates, or conflicts with other federal rules or with state or local government rules; and (5) the length of time since the rule has been evaluated or the degree to which technology, economic conditions, or other factors have changed in the area affected by the rule. At the end of the Review Year, we will publish the results of our review. The following table shows the 10-year analysis and review schedule:

NATIONAL HIGHWAY TRAFFIC SAFETY ADMINISTRATION SECTION 610 REVIEWS

Year	Regulations to be reviewed	Analysis year	Review year
1	49 CFR 571.223 through 571.500, and parts 575 and 579	2008	2009
2	23 CFR parts 1200 and 1300	2009	2010
3	49 CFR parts 501 through 526 and 571.213	2010	2011
4	49 CFR 571.131, 571.217, 571.220, 571.221, and 571.222	2011	2012
5	49 CFR 571.101 through 571.110, and 571.135, 571.138 and 571.139	2012	2013
6	49 CFR parts 529 through 578, except parts 571 and 575	2013	2014
7	49 CFR 571.111 through 571.129 and parts 580 through 588	2014	2015
8	49 CFR 571.201 through 571.212	2015	2016
9	49 CFR 571.214 through 571.219, except 571.217	2016	2017
10	49 CFR parts 591 through 595 and new parts and subparts	2017	2018

C. Regulations Under Analysis

During Year 2, we will continue to conduct a preliminary assessment of the following sections of 23 CFR parts 1200 and 1300:

Section	Title
1200	Uniform procedures for State highway safety programs.
1204	[Reserved].
1205	Highway safety programs; determinations of effectiveness.
1206	Rules of procedure for invoking sanctions under the Highway Safety Act of 1966.
1208	National minimum drinking age.
1210	Operation of motor vehicles by intoxicated minors.
1215	Use of safety belts—compliance and transfer-of-funds procedures.

Section	Title
1225	Operation of motor vehicles by intoxicated persons.
1235	Uniform system for parking for persons with disabilities.
1240	Safety incentive grants for use of seat belts—allocations based on seat belt use rates.
1250	Political subdivision participation in State highway safety programs.
1251	State Highway Safety Agency.
1252	State matching of planning and administration costs.
1270	Open container laws.
1275	Repeat intoxicated driver laws.
1313	Incentive grant criteria for alcohol-impaired driving prevention programs.
1327	Procedures for participating in and receiving information from the National Driver Register Problem Driver Pointer System.
1335	State highway safety data improvements.
1340	Uniform criteria for State observational surveys of seat belt use.
1345	Incentive grant criteria for occupant protection programs.
1346–1349	[Reserved].
1350	Incentive grant criteria for motorcycle safety program.
1351–1399	[Reserved].

We are seeking comments on whether any requirements in 23 CFR parts 1200 and 1300 have a significant economic impact on a substantial number of small entities. "Small entities" include small businesses, not-for-profit organizations that are independently owned and operated and are not dominant in their fields, and governmental jurisdictions with populations under 50,000. Business entities are generally defined as small businesses by Standard Industrial Classification (SIC) code, for the purposes of receiving Small Business Administration (SBA) assistance. Size standards established by SBA in 13 CFR 121.201 are expressed either in number of employees or annual receipts in millions of dollars, unless otherwise specified. The number of employees or annual receipts indicates the maximum allowed for a concern and its affiliates to be considered small. If your business or organization is a small entity and if any of the requirements in 23 CFR parts 1200 and 1300 have a significant economic impact on your business or organization, please submit a comment to explain how and to what degree these rules affect you, the extent of the economic impact on your business or organization, and why you believe the economic impact is significant.

If the agency determines that there is a significant economic impact on a substantial number of small entities, it will ask for comment in a subsequent notice during the Review Year on how these impacts could be reduced without reducing safety.

II. Plain Language

A. Background and Purpose

Executive Order 12866 and the President's memorandum of June 1, 1998, require each agency to write all rules in plain language. Application of the principles of plain language includes consideration of the following questions:

- Have we organized the material to suit the public's needs?
- Are the requirements in the rule clearly stated?
- Does the rule contain technical language or jargon that is not clear?
- Would a different format (grouping and order of sections, use of headings, paragraphing) make the rule easier to understand?
- Would more (but shorter) sections be better?
- Could we improve clarity by adding tables, lists, or diagrams?
- What else could we do to make the rule easier to understand?

If you have any responses to these questions, please include them in your comments on this document.

B. Review Schedule

In conjunction with our section 610 reviews, we will be performing plain language reviews over a ten-year period on a schedule consistent with the section 610 review schedule. We will review 23 CFR parts 1200 and 1300 to determine if these regulations can be reorganized and/or rewritten to make them easier to read, understand, and use. We encourage interested persons to submit draft regulatory language that clearly and simply communicates regulatory requirements, and other recommendations, such as for putting information in tables that may make the regulations easier to use.

Comments

How do I prepare and submit comments?

Your comments must be written and in English. To ensure that your comments are correctly filed in the Docket, please include the docket number of this document in your comments.

Your comments must not be more than 15 pages long. (49 CFR 553.21.) We established this limit to encourage you to write your primary comments in a concise fashion. However, you may attach necessary additional documents to your comments. There is no limit on the length of the attachments.

Please submit two copies of your comments, including the attachments, to Docket Management at the address given above under **ADDRESSES**.

Please note that pursuant to the Data Quality Act, in order for substantive data to be relied upon and used by the agency, it must meet the information quality standards set forth in the OMB and DOT Data Quality Act guidelines. Accordingly, we encourage you to consult the guidelines in preparing your comments. OMB's guidelines may be accessed at *http://www.whitehouse.gov/omb/fedreg/reproducible.html.* DOT's guidelines may be accessed at *http://dmses.dot.gov/submit/DataQualityGuidelines.pdf.*

How can I be sure that my comments were received?

If you wish Docket Management to notify you upon its receipt of your comments, enclose a self-addressed, stamped postcard in the envelope containing your comments. Upon receiving your comments, Docket Management will return the postcard by mail.

How do I submit confidential business information?

If you wish to submit any information under a claim of confidentiality, you should submit three copies of your complete submission, including the information you claim to be confidential business information, to the Chief Counsel, NHTSA, U.S. Department of Transportation, 1200 New Jersey Avenue, SE., Washington, DC 20590. In addition, you should submit two copies,

from which you have deleted the claimed confidential business information, to Docket Management at the address given above under **ADDRESSES**. When you send a comment containing information claimed to be confidential business information, you should include a cover letter setting forth the information specified in our confidential business information regulation. (49 CFR part 512.)

Will the agency consider late comments?

We will consider all comments that Docket Management receives before the close of business on the comment closing date indicated above under **DATES**. To the extent possible, we will also consider comments that Docket Management receives after that date.

How can I read the comments submitted by other people?

You may read the comments received by Docket Management at the address given above under **ADDRESSES**. The hours of the Docket are indicated above in the same location.

You may also see the comments on the Internet. To read the comments on the Internet, take the following steps:

(1) Go to the Federal Docket Management System (FDMS) at *http://regulations.gov*.

(2) FDMS provides two basic methods of searching to retrieve dockets and docket materials that are available in the system: (a) "Quick Search" to search using a full-text search engine, or (b) "Advanced Search," which displays various indexed fields such as the docket name, docket identification number, phase of the action, initiating office, date of issuance, document title, document identification number, type of document, **Federal Register** reference, CFR citation, etc. Each data field in the advanced search may be searched independently or in combination with other fields, as desired. Each search yields a simultaneous display of all available information found in FDMS that is relevant to the requested subject or topic.

(3) You may download the comments. However, since the comments are imaged documents, instead of word processing documents, the "pdf" versions of the documents are word searchable.

Please note that even after the comment closing date, we will continue to file relevant information in the Docket as it becomes available. Further, some people may submit late comments. Accordingly, we recommend that you periodically check the Docket for new material.

Marilena Amoni,

Associate Administrator for the National Center for Statistics and Analysis.

[FR Doc. 2010–9739 Filed 4–27–10; 8:45 am]

BILLING CODE 4910–59–P

OCCUPATIONAL SAFETY AND HEALTH REVIEW COMMISSION

29 CFR Part 2201

Regulations Implementing the Freedom of Information Act

AGENCY: Occupational Safety and Health Review Commission.

ACTION: Notice of proposed rulemaking.

SUMMARY: The Occupational Safety and Health Review Commission (OSHRC) is proposing to revise its regulations implementing the Freedom of Information Act (FOIA). The proposed regulations have been updated to reflect the amendments to the FOIA from the Openness Promotes Effectiveness in our National Government Act of 2007 (OPEN Government Act), as well as changes in OSHRC's own policies and procedures.

DATES: Submit comments on or before May 28, 2010.

ADDRESSES: OSHRC encourages electronic submission of comments. You may submit comments by any of the following methods:

- *E-mail: regsdocket@oshrc.gov.* Include "FOIA PROPOSED RULEMAKING" in the subject line of the message.
- *Fax:* (202) 606–5417.
- *Mail:* 1120 20th Street, NW., 9th Floor, Washington, DC 20036–3457.
- *Hand Delivery/Courier:* Same as mailing address.

Instructions: All submissions must include your name, return address, and e-mail address, if applicable. Please clearly label submissions as "FOIA PROPOSED RULEMAKING." If you submit comments by e-mail, you will receive a confirmation e-mail from the system indicating that we have received your submission. If, in response to your comments submitted via e-mail, you do not receive a confirmation e-mail within five working days, please contact us directly at (202) 606–5410.

FOR FURTHER INFORMATION CONTACT: Jennifer D. Marr, FOIA Public Liaison, or Robert M. Kahn, Office of the General Counsel, via telephone: (202) 606–5410, or via e-mail: *jmarr@oshrc.gov* or *rkahn@oshrc.gov*.

SUPPLEMENTARY INFORMATION:

I. Background

OSHRC proposes several substantive and technical revisions to its regulations implementing the FOIA (5 U.S.C. 552, as amended) that fall within two general categories. First, OSHRC proposes modifying its existing FOIA regulations to reflect the amendments to the FOIA contained in the OPEN Government Act, Public Law 110–175, 121 Stat. 2524. The OPEN Government Act amended various FOIA administrative procedures, such as when an agency may toll the statutory time for responding to FOIA requests and how to indicate exemptions authorizing deletion of materials under the FOIA on the responsive record.

Second, as a result of the Chief FOIA Officer's review of OSHRC's FOIA operations, OSHRC proposes to revise its regulations to further clarify its policies and procedures relating to the processing of FOIA requests and the administration of its FOIA operations. These proposed revisions include changes to the description of the OSHRC reading rooms and to OSHRC fee policies.

Accordingly, OSHRC proposes to revise its regulations implementing the FOIA and put them out for public comment. The specific amendments that OSHRC proposes to each section of 29 CFR part 2201 are discussed hereafter in regulatory sequence.

II. Proposed Regulatory Revisions

In 29 CFR 2201.3, OSHRC proposes revising the description of the Chief FOIA Officer's duties in paragraph (a) to reflect the more detailed description of those duties set forth under the OPEN Government Act. 5 U.S.C. 552(k). Additionally, OSHRC proposes adding a description of the FOIA Public Liaison's duties in paragraph (c) to reflect the responsibilities described in the OPEN Government Act. 5 U.S.C. 552(a)(6)(B)(ii), (l). In paragraph (d) OSHRC proposes minor revisions to the FOIA Service Center's contact information. OSHRC also proposes revising paragraph (d) to add information about status requests provided by the FOIA Service Center. 5 U.S.C. 552(a)(7)(B).

In 29 CFR 2201.4, OSHRC proposes revising paragraph (c) to clarify the type of records publicly available in the e-FOIA Reading Room and where to access them. OSHRC proposes changing paragraph (d) to explain the procedures for using OSHRC's on-site e-FOIA Reading Room. OSHRC also proposes revising its definition of "Representative of the news media, or news media requester" in paragraph (e) to reflect the

definition provided in the OPEN Government Act. 5 U.S.C. 552(a)(4)(A)(ii). OSHRC would also add definitions of "Exceptional circumstances" and "Record" to paragraph (e), based on the description of these terms in the OPEN Government Act. 5 U.S.C. 552(a)(4)(A)(viii), (f)(2).

In 29 CFR 2201.6, OSHRC proposes revising paragraph (a) to add the tolling requirements set forth in the OPEN Government Act. 5 U.S.C. 552(a)(6)(A)(ii). Following the new requirement in the OPEN Government Act, OSHRC proposes revising its procedure for making deletions within records as set forth in paragraph (g) to include, where technically feasible, marking the exemption under which each deletion is made. 5 U.S.C. 552(b). OSHRC also proposes creating a new paragraph (h) describing how OSHRC assigns tracking numbers to incoming FOIA requests and notifies a requester of the tracking number assigned to the request. 5 U.S.C. 552(a)(7)(A). In addition, OSHRC proposes creating a new paragraph (i) to indicate that when searching for responsive records, OSHRC will ordinarily consider only records in its possession as of the date it begins its search. Finally, OSHRC proposes minor grammatical corrections to paragraphs (c) and (d)(3).

In 29 CFR 2201.7, OSHRC proposes revising the copying fee provision in paragraph (b)(1) and the search fee provision in paragraph (b)(2) to reflect the new requirements for each in the OPEN Government Act. 5 U.S.C. 552(a)(4)(A)(viii). OSHRC proposes revising paragraph (e) to consider requests for which fees are likely to exceed $25 received only after the requester agrees to pay the actual or estimated fee.

In 29 CFR 2201.10, OSHRC proposes to update paragraph (a) to reflect the new maintenance of statistics requirements in the OPEN Government Act. 5 U.S.C. 552(e).

III. Statutory and Executive Order Reviews

Executive Orders 12866 and 13132, and the Unfunded Mandates Reform Act of 1995: OSHRC is an independent regulatory agency and, as such, is not subject to the requirements of E.O. 12866, E.O. 13132, or the Unfunded Mandates Reform Act, 2 U.S.C. 1501 *et seq.*

Paperwork Reduction Act

OSHRC has determined that the Paperwork Reduction Act, 44 U.S.C. 3501 *et seq.,* does not apply because these rules do not contain any information collection requirements that require the approval of OMB.

Regulatory Flexibility Act

OSHRC certifies under the Regulatory Flexibility Act, 5 U.S.C. 605(b), that these rules, if adopted, would not have a significant economic impact on a substantial number of small entities, because it applies exclusively to a Federal agency and individuals accessing the services of a Federal agency. Therefore, a Regulatory Flexibility Analysis is not required.

Congressional Review Act

These proposed revisions do not constitute a rule or a major rule under the Congressional Review Act, 5 U.S.C. 801–808. 5 U.S.C. 804(2), (3)(C).

List of Subjects in 29 CFR Part 2201

Freedom of information.

Signed at Washington, DC, on April 15, 2010.

Thomasina V. Rogers,

Chairman.

For the reasons set forth in the preamble, OSHRC proposes to amend 29 CFR part 2201 as follows:

PART 2201—REGULATIONS IMPLEMENTING THE FREEDOM OF INFORMATION ACT

1. The authority citation for part 2201 is revised to read as follows:

Authority: 29 U.S.C. 661(g); 5 U.S.C. 552.

2. Section 2201.3 is amended by revising paragraphs (a), (c), and (d) to read as follows:

§ 2201.3 Delegation of authority and responsibilities.

(a) The Chairman delegates to the Chief FOIA Officer the authority to act upon all requests for agency records. The Chief FOIA Officer shall, subject to the authority of the Chairman:

(1) Have agency-wide responsibility for efficient and appropriate compliance with this section;

(2) Monitor implementation of the FOIA throughout the agency and keep the Chairman and the Attorney General appropriately informed of the agency's performance in implementing this section;

(3) Recommend to the Chairman such adjustments to agency practices, policies, personnel, and funding as may be necessary to improve implementation of this section;

(4) Review and report to the Attorney General, through the Chairman, at such times and in such formats as the Attorney General may direct, on the agency's performance in implementing this section; and

(5) Facilitate public understanding of the purposes of the statutory exemptions of this section by including concise descriptions of the exemptions in both the agency's FOIA handbook, and the agency's annual report on this section, and by providing an overview, where appropriate, of certain general categories of agency records to which those exemptions apply.

* * * * *

(c) The Chief FOIA Officer shall designate the FOIA Public Liaison(s), who shall serve as the supervisory official(s) to whom a FOIA requester can raise concerns about the service the FOIA requester has received following an initial response. FOIA Public Liaisons shall be responsible for assisting in reducing delays, increasing transparency and understanding of the status of requests, and assisting in the resolution of disputes.

(d) OSHRC establishes a FOIA Requester Service Center that shall be staffed by the FOIA Disclosure Officer(s) and FOIA Public Liaison(s). The address and telephone number of the FOIA Requester Service Center is 1120 20th Street, NW., 9th Floor, Washington, DC 20036–3457, (202) 606–5700. The FOIA Requester Service Center is available to provide information about the status of a request to the person making the request using the assigned tracking number (as described in § 2201.6(h)), including

(1) The date on which the agency originally received the request; and

(2) An estimated date on which the agency will complete action on the request.

3. Section 2201.4 is amended:

a. By revising paragraphs (c) introductory text, (c)(1), (3), (4), and (5);

b. By revising paragraph (d); and

c. In paragraph (e) by revising the definition of "Representative of the news media, or news media requester" and adding, in alphabetical order, the definitions "Exceptional circumstances" and "Record".

The revisions and additions read as follows:

§ 2201.4 General policy and definitions.

* * * * *

(c) *Record availability at the OSHRC e-FOIA Reading Room.* The records of Commission activities are publicly available for inspection and copying, and may be accessed electronically through the Commission's Web site at *http://www.oshrc.gov/foia/foia_reading_room.html.* These records include:

(1) Final decisions, including concurring and dissenting opinions, remand orders, as well as

Administrative Law Judge decisions pending OSHRC review, issued as a result of adjudication of cases;

* * * * *

(3) Agency policy statements and interpretations adopted by OSHRC and not published in the **Federal Register**, if any;

(4) Administrative staff manuals that affect a member of the public, if any;

(5) Copies of records that have been released to a person under the FOIA that, because of the subject matter, the Commission determines have become or are likely to become the subject of subsequent requests for substantially the same records; and

* * * * *

(d) *Record availability at the OSHRC on-site e-FOIA Reading Room.* Any member of the public may, upon request, access OSHRC's e-FOIA Reading Room via a computer terminal at the OSHRC National Office, located at 1120 20th St., NW., 9th Floor, Washington, DC 20036–3457. Such a request must be made in writing to the FOIA Requester Service Center, and indicate a preferred date and time for the requested access. OSHRC reserves the right to arrange a different date and time with the requester, if necessary.

(e) * * *

Exceptional circumstances does not include a delay that results from a predictable agency workload of requests under this section, unless the agency demonstrates reasonable progress in reducing its backlog of pending requests.

* * * * *

Record means any information that would be an OSHRC record subject to the requirements of the FOIA when maintained by OSHRC in any format, including an electronic format, and any such OSHRC record that is maintained for OSHRC by an entity under Government contract, for the purposes of records management.

Representative of the news media, or *news media requester* is any person or entity that gathers information of potential interest to a segment of the public, uses its editorial skills to turn the raw materials into a distinct work, and distributes that work to an audience. For purposes of this definition, the term "news" means information that is about current events or that would be of current interest to the public. Examples of news media entities include television or radio stations broadcasting to the public at large and publishers of periodicals (but only in those instances where they can qualify as disseminators of "news") who make their products available for purchase or subscription by, or free distribution to, the general public. These examples are not all-inclusive. Moreover, as methods of news delivery evolve (for example the adoption of the electronic dissemination of newspapers through telecommunications services), such alternative media shall be considered to be news-media entities. For "freelance" journalists to be regarded as working for a news organization, they must demonstrate a solid basis for expecting publication through that organization. A publication contract would be the clearest proof, but OSHRC shall also look to the past publication record of a requester in making this determination. To be in this category, a requester must not be seeking the requested records for a commercial use. However, a request for records supporting the news-dissemination function of the requester shall not be considered to be for a commercial use.

* * * * *

4. Section 2201.6 is amended by revising paragraphs (a), (c), (d)(3), and (g), and adding paragraphs (h) and (i) to read as follows:

§ 2201.6 Responses to requests.

(a) *Responses within 20 working days.* The FOIA Disclosure Officer will either grant or deny a request for records within 20 working days after receiving the request. The 20-day period shall not be tolled by the agency except in the following cases. In these cases, the agency's receipt of the requester's response to the agency's request for information or clarification ends the tolling period.

(1) The agency may toll the 20-day period once while awaiting information that it has reasonably requested from the requester under this section. The agency may make more than one request to the requester for information not related to issues regarding fee assessment, but can only toll the 20-day period once; or

(2) The agency may toll the 20-day period as many times as are necessary to clarify any issues regarding fee assessment.

* * * * *

(c) *Additional extension.* The FOIA Disclosure Officer shall notify the requester in writing when it appears that a request cannot be completed within the allowable time (20 working days plus a 10-working-day extension). In such instances, the requester will be provided an opportunity to limit the scope of the request so that it may be processed in the time limit, or to agree to a reasonable alternative time frame for processing.

(d) * * *

(3) A requester should assume, unless otherwise notified by the Commission, that its request is in the first track of processing. The Commission will notify a requester when its request is placed in the second track for processing and that notification will include the estimated time for completion. Should subsequent information substantially change the estimated time to process a request, the requester will be notified in writing. In the case of a request expected to take more than 30 working days for action, a requester may modify the request to allow it to be processed faster or to reduce the cost of processing. Partial responses may be sent to a requester as documents are obtained by the FOIA Disclosure Officer from the supplying offices.

* * * * *

(g) *Deletions.* The FOIA Disclosure Officer shall provide to the requester in writing a justification for deletions within records. The amount of information deleted from records shall be indicated on the released portion of the record, unless including that indication would harm an interest protected by the exemption under which the deletion is made. If technically feasible, the place in the record where the deletion is made, and the exemption under which the deletion is made, shall be marked.

(h) *Tracking numbers.* The FOIA Disclosure Officer shall assign an individualized tracking number to each request received for processing and provide to each person making a request the tracking number assigned to the request. For any response that will take ten or more days to process, OSHRC will send the requester a postcard indicating the request's receipt date and its assigned tracking number.

(i) *Determining responsive records.* In determining which records are responsive to a request, OSHRC ordinarily will include only records in its possession as of the date it begins its search for them. If any other date is used, OSHRC shall inform the requester of that date.

5. Section 2201.7 is amended by

a. Revising paragraphs (b)(1) and (b)(2) introductory text;

b. Adding paragraph (b)(2)(v); and

c. Revising paragraph (e).

The revisions and addition read as follows:

§ 2201.7 Fees for copying, searching, and review.

* * * * *

(b) * * *

(1) *Copying fee.* The fee per copy of each page shall be calculated in

accordance with the per-page amount established in OSHRC's fee schedule. See Appendix A to this part. For other forms of duplication, direct costs of producing the copy, including operator time, shall be calculated and assessed. Copying fees shall not be charged for the first 100 pages of copies unless the copies are requested for a commercial use. No copying fee shall be charged for educational, scientific, or news media requests if the agency fails to comply with any time limit in § 2201.6, provided that no unusual or exceptional circumstances (as those terms are defined in § 2201.6(b) and § 2201.4(e), respectively) apply to the processing of the request.

(2) *Search fee.* Search fees shall be calculated in accordance with the amounts established in OSHRC's fee schedule. See Appendix A to this part. Commercial requesters shall be charged for all search time, except as described below. Search fees shall be charged even if the responsive documents are not located or if they are located but withheld on the basis of an exemption. However, search fees shall be limited or not charged as follows:

* * * * *

(v) *Failure to comply with time limits.* No search fee shall be charged if the agency fails to comply with any time limit in § 2201.6, provided that no unusual or exceptional circumstances (as those terms are defined in § 2201.6(b) and § 2201.4(e), respectively) apply to the processing of the request.

* * * * *

(e) *Fees likely to exceed $25.* If the total fee charges are likely to exceed $25, the FOIA Disclosure Officer shall notify the requester of the estimated amount of the charges, unless the requester has indicated a willingness to pay fees up to the estimated amount. The notification shall offer the requester an opportunity to confer with the FOIA Disclosure Officer to reformulate the request to meet the requester's needs at a lower cost. In cases in which a requester has been notified that actual or estimated fees amount to more than $25, the request shall not be considered received and further work shall not be done on it until the requester agrees to pay the actual or estimated total fee. Any such agreement shall be memorialized in writing.

* * * * *

6. Section 2201.10 is amended by:

a. Revising paragraphs (a)(3), (5), and (7);

b. Redesignating paragraphs (a)(8), (10), and (11) as paragraphs (a)(16) through (a)(18);

c. Removing paragraph (a)(9); and

d. Adding new paragraphs (a)(8) through (a)(15).

The revisions and additions read as follows:

§ 2201.10 Maintenance of statistics.

(a) * * *

(3) A complete list of all statutes that the agency used to authorize the withholding of information under 5 U.S.C. 552(b)(3), which exempts information that is specifically exempted from disclosure by other statutes and the number of occasions on which each statute was relied upon;

* * * * *

(5) The number of requests for records pending before the agency as of September 30 of the preceding year, and the median and average number of days that these requests had been pending before the agency as of that date;

* * * * *

(7) The median number of days taken by the agency to process different types of requests, based on the date on which the requests were received by the agency;

(8) The average number of days for the agency to respond to a request beginning on the date on which the request was received by the agency, the median number of days for the agency to respond to such requests, and the range in number of days for the agency to respond to such requests;

(9) Based on the number of business days that have elapsed since each request was originally received by the agency—

(i) The number of requests for records to which the agency has responded with a determination within a period up to and including 20 days, and in 20-day increments up to and including 200 days;

(ii) The number of requests for records to which the agency has responded with a determination within a period greater than 200 days and less than 301 days;

(iii) The number of requests for records to which the agency has responded with a determination within a period greater than 300 days and less than 401 days; and

(iv) The number of requests for records to which the agency has responded with a determination within a period greater than 400 days;

(10) The average number of days for the agency to provide the granted information beginning on the date on which the request was originally filed, the median number of days for the agency to provide the granted information, and the range in number of days for the agency to provide the granted information;

(11) The median and average number of days for the agency to respond to administrative appeals based on the date on which the appeals originally were received by the agency, the highest number of business days taken by the agency to respond to an administrative appeal, and the lowest number of business days taken by the agency to respond to an administrative appeal;

(12) Data on the 10 active requests with the earliest filing dates pending at the agency, including the amount of time that has elapsed since each request was originally received by the agency;

(13) Data on the 10 active administrative appeals with the earliest filing dates pending before the agency as of September 30 of the preceding year, including the number of business days that have elapsed since the requests were originally received by the agency;

(14) The number of expedited review requests that are granted and denied, the average and median number of days for adjudicating expedited review requests, and the number adjudicated within the required 10 days;

(15) The number of fee waiver requests that are granted and denied, and the average and median number of days for adjudicating fee waiver determinations;

* * * * *

[FR Doc. 2010–9432 Filed 4–27–10; 8:45 am]

BILLING CODE 7600–01–P

DEPARTMENT OF HOMELAND SECURITY

Coast Guard

33 CFR Part 110

[Docket No. USCG 2008–1082]

RIN 1625–AA01

Anchorage Regulations; Port of New York

AGENCY: Coast Guard, DHS.

ACTION: Supplemental notice of proposed rulemaking.

SUMMARY: This document supplements the Coast Guard's September 2009 proposal to amend Anchorage Ground No. 19 located east of the Edgewater-Weehawken Federal Channel on the Hudson River. The revised proposal is necessary to facilitate safe navigation and provide safe and secure anchorages for vessels operating in the area. This supplemental notice of proposed rulemaking amends the NPRM that incorrectly stated that the current Edgewater-Weehawken Federal Channel would be relocated as part of the

proposal to amend Anchorage Ground No. 19. This SNPRM also cancels two proposed changes to the Anchorage Regulation discussed in the NPRM and provides an additional opportunity for comment on the proposed changes to the regulations for Anchorage 19.

DATES: Comments and related material must be received by the Coast Guard on or before May 28, 2010.

ADDRESSES: You may submit comments identified by docket number USCG–2008–1082 using any one of the following methods:

(1) *Federal eRulemaking Portal: http://www.regulations.gov.*

(2) *Fax:* 202–493–2251.

(3) *Mail:* Docket Management Facility (M–30), U.S. Department of Transportation, West Building Ground Floor, Room W12–140, 1200 New Jersey Avenue, SE., Washington, DC 20590–0001.

(4) *Hand Delivery:* Same as mail address above, between 9 a.m. and 5 p.m., Monday through Friday, except Federal holidays. The telephone number is 202–366–9329.

To avoid duplication, please use only one of these four methods. See the "Public Participation and Request for Comments" portion of the **SUPPLEMENTARY INFORMATION** section below for instructions on submitting comments.

FOR FURTHER INFORMATION CONTACT: If you have questions on this proposed rule, call or e-mail Mr. Jeff Yunker, Coast Guard Sector New York, Waterways Management Division; telephone 718–354–4195, e-mail *Jeff.M.Yunker@uscg.mil.* If you have questions on viewing or submitting material to the docket, call Renee V. Wright, Program Manager, Docket Operations, telephone 202–366–9826.

SUPPLEMENTARY INFORMATION:

Public Participation and Request for Comments

We encourage you to participate in this rulemaking by submitting comments and related materials. All comments received will be posted without change to *http://www.regulations.gov* and will include any personal information you have provided.

Submitting Comments

If you submit a comment, please include the docket number for this rulemaking (USCG–2008–1082), indicate the specific section of this document to which each comment applies, and provide a reason for each suggestion or recommendation. You may submit your comments and material online (via *http://www.regulations.gov*) or by fax, mail, or hand delivery, but please use only one of these means. If you submit a comment online via *http://www.regulations.gov,* it will be considered received by the Coast Guard when you successfully transmit the comment. If you fax, hand deliver, or mail your comment, it will be considered as having been received by the Coast Guard when it is received at the Docket Management Facility. We recommend that you include your name and a mailing address, an e-mail address, or a telephone number in the body of your document so that we can contact you if we have questions regarding your submission.

To submit your comment online, go to *http://www.regulations.gov* and click on the "submit a comment" box, which will then become highlighted in blue. In the "Document Type" drop-down menu select "Proposed Rule" and insert "USCG–2008–1082" in the "Keyword" box. Click "Search" and then click on the balloon shape in the "Actions" column. If you submit your comments by mail or hand delivery, submit them in an unbound format, no larger than 8½ by 11 inches, suitable for copying and electronic filing. If you submit comments by mail and would like to know that they reached the Facility, please enclose a stamped, self-addressed postcard or envelope. We will consider all comments and material received during the comment period and may change the rule based on your comments.

Viewing Comments and Documents

To view comments, as well as documents mentioned in this preamble as being available in the docket, go to *http://www.regulations.gov* and click on the "Read comments" box, which will then become highlighted in blue. In the "Keyword" box insert "USCG–2008–1082" and click "Search." Click the "Open Docket Folder" in the "Actions" column. You may also visit the Docket Management Facility in Room W12–140 on the ground floor of the Department of Transportation West Building, 1200 New Jersey Avenue, SE., Washington, DC 20590, between 9 a.m. and 5 p.m., Monday through Friday, except Federal holidays. We have an agreement with the Department of Transportation to use the Docket Management Facility.

Privacy Act

Anyone can search the electronic form of comments received into any of our dockets by the name of the individual submitting the comment (or signing the comment, if submitted on behalf of an association, business, labor union, etc.). You may review a Privacy Act notice regarding our public dockets in the January 17, 2008 issue of the **Federal Register** (73 FR 3316).

Public Meeting

We do not now plan to hold a public meeting. But, you may submit a request for one using one of the four methods specified under **ADDRESSES**. Please explain why you believe a public meeting would be beneficial. If we determine that one would aid this rulemaking, we will hold one at a time and place announced by a later notice in the **Federal Register**.

Background and Purpose

The Hudson River Pilots Association, through the Port of New York/New Jersey Harbor Safety, Navigation and Operations Committee, has requested that the Coast Guard revise the boundaries of Anchorage Ground No. 19 which is located on the Hudson River, east of the Weehawken-Edgewater Federal Channel and south of the George Washington Bridge.

Due to severe recurring shoaling within the Weehawken-Edgewater Federal Channel, the Hudson River Pilots requested and received authorization from the Coast Guard and Army Corps of Engineers (ACOE) to pilot vessels through the deeper and safer water located within the boundaries of Anchorage Ground No. 19.

Due to shoaling, the March 2007 ACOE survey verified a controlling depth of 27 feet in the Right outside Quarter of the Weehawken-Edgewater Federal Channel where vessels bound for ports north of New York City would have to transit. As published by the ACOE Institute for Water Resources, vessels with drafts of up to 34 feet transit the Hudson River. In calendar year 2006, there were 6,562 transits on the Hudson River between the mouth of the Harlem River and Waterford, NY by vessels with a draft of 27 feet or greater. Vessels with a draft of 27 feet or greater would be required to transit through the deeper water which is within the current boundaries of Anchorage Ground No.19.

Tug and barge traffic within the harbor has increased 37% since 1991. Anchorage Ground No. 19 is the closest Anchorage Ground available for use when there is no space for temporary anchoring within the Upper New York Bay Anchorage Grounds. Hence, these vessels transit to Anchorage Ground No. 19 to await a berth, or orders, to minimize fuel consumption and provide

an orderly flow of commerce within the harbor and the New England region.

On October 14, 2008, the Coast Guard Captain of the Port New York issued an Advisory Notice notifying the maritime community that in accordance with 33 CFR 110.155(c)(5)(i), vessels would only be allowed to anchor on the western boundary of Anchorage Ground No. 19. This temporary solution was necessary to facilitate deep draft vessel transit through the eastern portion of Anchorage Ground No. 19.

On September 9, 2009, the Coast Guard published a notice of proposed rulemaking (NPRM) titled "Anchorage Regulations; Port of New York and Vicinity" (Docket number USCG–2009–1082) in the **Federal Register** (74 FR 47906). The proposal sought to amend Anchorage Ground No. 19 by dividing it into two separate anchorages (Anchorage Ground No. 19 West and Anchorage Ground No. 19 East), and relocating the majority of the anchorage area to the western side of the Hudson River. The proposed change would allow deep draft vessels to transit the deeper water without having to transit through Anchorage Ground No. 19.

In that NPRM, it was stated that the ACOE would relocate the Weehawken-Edgewater Federal Channel to the east of its current location and the Coast Guard would relocate Anchorage Ground No. 19 to the west of its current location.

Since the publication of the NPRM, the ACOE has advised the Coast Guard that it does not intend to seek Congressional action to de-authorize the Weehawken-Edgewater Federal Channel. However, the ACOE also advised that it does not object to the Coast Guard establishing an Anchorage Ground in the existing Weehawken-Edgewater Federal Channel.

Consequently, to facilitate safe navigation of deep draft vessels the Coast Guard revises its proposal to disestablish Anchorage Ground No. 19 and establish two separate anchorage grounds, Anchorage Ground 19 West and Anchorage Ground No. 19 East. This would be accomplished by dividing Anchorage Ground No. 19 into an east and a west portion and relocating the majority of the anchorage area (new Anchorage Ground No. 19 West) from the eastern half of the Hudson River to the western half closer to the New Jersey shore (over the Weehawken-Edgewater Federal Channel). The following graphics display the current boundary of Anchorage Ground No. 19 and the proposed boundaries of Anchorage Grounds No. 19 East and No. 19 West:

BILLING CODE 9110–04–P

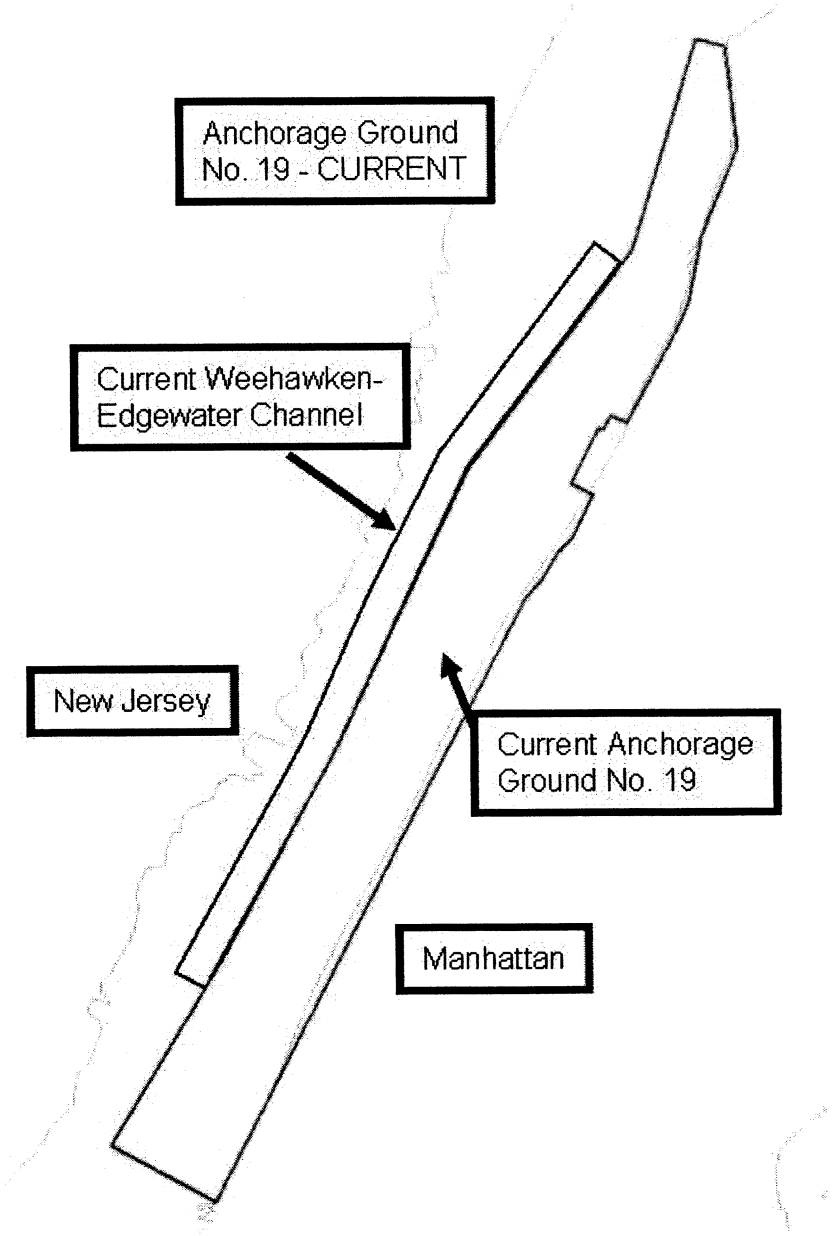
Anchorage Ground
No. 19 - CURRENT
Current Weehawken-
Edgewater Channel
New Jersey
Current Anchorage
Ground No. 19
Manhattan

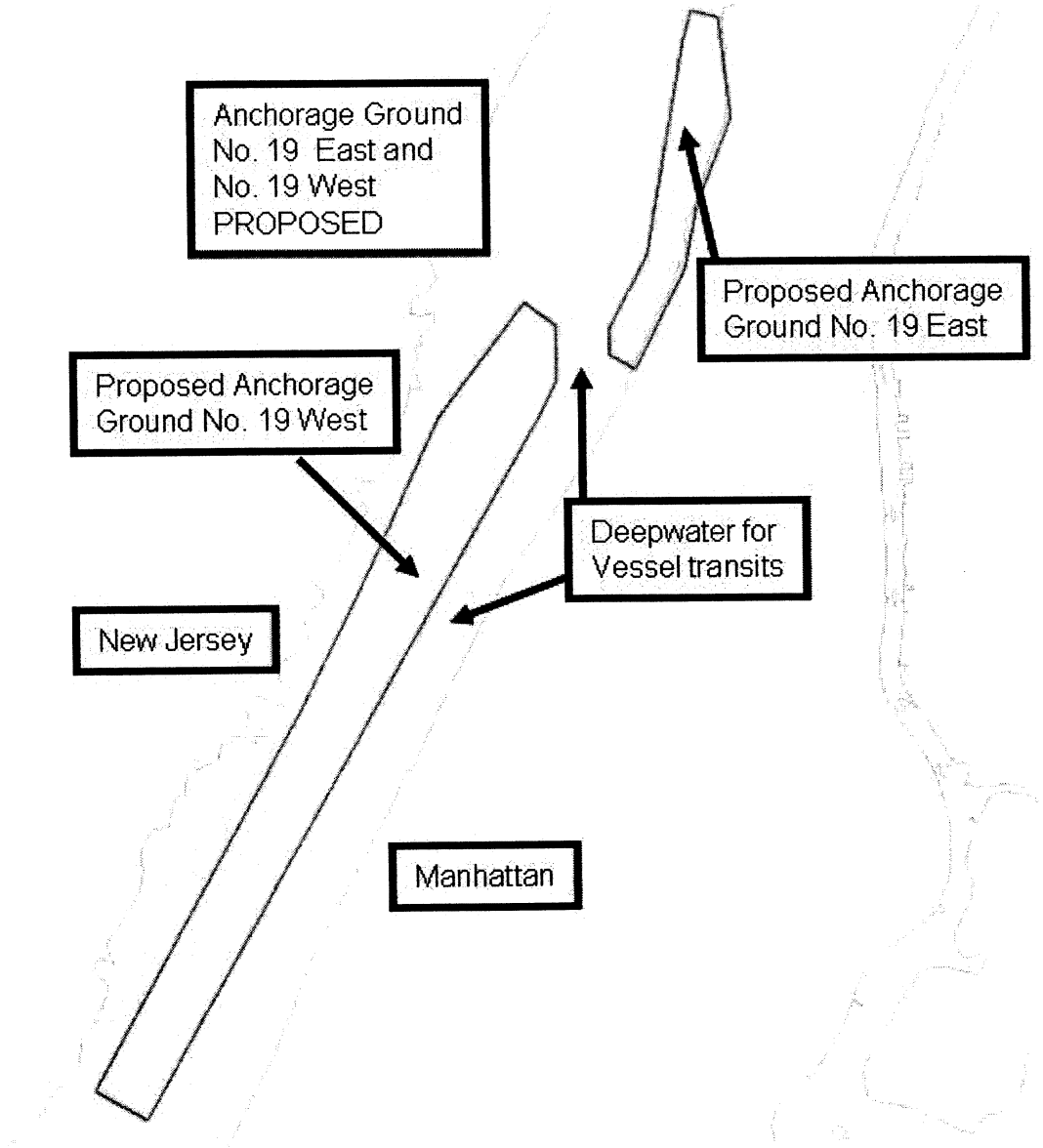

BILLING CODE 9110–04–C

Disestablishing Anchorage Ground No. 19 and establishing Anchorage Ground No. 19 East and Anchorage Ground No. 19 West would create a 400 yard wide area of deeper water between the newly established anchorage grounds. This proposed change would allow deep draft vessels to transit the deeper water without having to transit through an anchorage ground.

The Weehawken-Edgewater Federal Channel is authorized by Congress, and constructed and maintained by the ACOE. The ACOE has advised the Coast Guard that no portion of the Weehawken-Edgewater Federal Channel will be relocated in conjunction with the proposed reapportionment, relocation and establishment of Anchorage Ground No. 19 into two new anchorage grounds. The ACOE has further advised that establishment of an anchorage ground in the Weehawken-Edgewater Federal Channel is not expected to impede navigation or a need to maintain channel depth because the Weehawken-Edgewater Federal Channel currently supports no deep draft vessel traffic.

According to the ACOE the Weehawken-Edgewater Federal Channel was originally intended to support commercial vessel operations on the New Jersey waterfront in the vicinity of the Channel. However, due to changes in shoreline usage from industrial to residential and recreational, the original intent of the Channel no longer exists. As a result there has not been a need to dredge the Weehawken-Edgewater Federal Channel segment to its authorized depth since it was last maintenance dredged in 1994.

The ACOE further advised that it does not appear likely that a need will arise in the foreseeable future to maintain the Channel for deep draft vessel traffic intending to access New Jersey waterfront and shore facilities. However, should a need recur in the future to accommodate deep draft traffic, the use of the areas as anchorage grounds would be re-evaluated.

In the interest of safe navigation and to minimize confusion, the ACOE and the USCG will request that the National Oceanic and Atmospheric Administration (NOAA) remove the Weehawken-Edgewater Federal Channel designation from NOAA charts. In addition, the Coast Guard will request chart corrections removing Anchorage Ground No. 19 boundary line designation and adding the boundary lines for the proposed Anchorage

Ground No. 19 West and Anchorage Ground No. 19 East.

Discussion of Revised Proposed Rule

In this rule the Coast Guard proposes to concurrently disestablish Anchorage Ground No. 19 and establish Anchorage Ground No. 19 East and Anchorage Ground No. 19 West. The following are the proposed boundaries of the new Anchorage Grounds:

(1) Anchorage No. 19 East, bound by the following points: 40°49′42.6″ N, 073°57′14.7″ W; thence to 40°49′45.9″ N, 073°57′22.0″ W; thence to 40°49′52.0″ N, 073°57′22.0″ W; thence to 40°50′08.3″ N, 073°57′10.8″ W; thence to 40°50′55.4″ N, 073°56′59.7″ W; thence to 40°51′02.5″ N, 073°56′57.4″ W; thence to 40°51′00.8″ N, 073°56′49.4″ W; thence along the shoreline to the point of origin (NAD 83).

(2) Anchorage No. 19 West, would be bound by the following points: 40°46′56.3″ N, 073°59′42.2″ W; thence to 40°47′36.9″ N, 073°59′11.7″ W; thence to 40°49′31.3″ N, 073°57′43.8″ W; thence to 40°49′40.2″ N, 073°57′37.6″ W; thence to 40°49′52.4″ N, 073°57′37.6″ W; thence to 40°49′57.7″ N, 073°57′47.3″ W; thence to 40°49′32.2″ N, 073°58′12.9″ W; thence to 40°49′00.7″ N, 073°58′33.1″ W; thence to 40°48′28.7″ N, 073°58′53.8″ W; thence to 40°47′38.2″ N, 073°59′31.2″ W; thence to 40°47′02.7″ N, 073°59′57.4″ W; thence to the point of origin (NAD 83).

Currently, Anchorage Ground No. 19 covers approximately 1,352 acres. The proposed Anchorage Ground No. 19 West would cover approximately 714.5 acres, and Anchorage Ground No. 19 East would cover 185.5 acres. There would be a 400-yard-wide space separating the two Anchorage Grounds. The depth of the water in the 400 yard wide space separating the two proposed Anchorage Grounds is sufficient to allow deep draft vessels to safely navigate and transit.

In the NPRM, the Coast Guard proposed to remove the regulation (33 CFR 110.155(c)(5)(i)) requiring all vessels to obtain permission from the Captain of the Port (COTP) prior to anchoring. Based on the expanded review of this proposal the Coast Guard has decided to maintain this regulation. This would provide the COTP the ability to better promote safe navigation and ensure the viability of the Marine Transportation System during events that create unforeseen circumstances for vessel traffic in the area.

In the NPRM, the Coast Guard proposed to remove the regulation (33 CFR 110.155(c)(5)(ii)) requiring each vessel to report its position to the Captain of the Port immediately after anchoring. Based on the expanded review of this proposal the Coast Guard has decided to maintain this regulation. This would provide the COTP the ability to better promote safe navigation and ensure the viability of the Marine Transportation System during events that create unforeseen circumstances for vessel traffic in the area.

The Coast Guard proposes to revise the regulation (33 CFR 110.155(c)(5)(iii)) that currently provides that no vessel may conduct lightering operations in the anchorage grounds without receiving permission from the Captain of the Port. The revision will clarify that when lightering is requested, the Captain of the Port must be notified at least four hours in advance of a vessel conducting lightering operations as required by 33 CFR 156.118.

The Coast Guard proposes to remove the regulation (33 CFR 110.155(c)(5)(iv)) requiring each vessel to move when the Captain of the Port notifies them the Anchorage is required by naval vessels. This regulation is no longer required as the closest naval facility is now located approximately 22 nautical miles away at Earle, NJ. Additionally, vessels may still be required to shift their position into, or within, the anchorage under the authority of 33 CFR 110.155(l)(12).

The Coast Guard proposes to revise the regulation (33 CFR 110.155(c)(5)(v)) requiring 48 hours advance notice to the Captain of the Port from vessels over 800 feet in length overall, or 40 feet in draft, requesting to use the anchorages. We propose to limit the use of the anchorage grounds to tugs and/or barges. Ships will not be authorized to anchor in these proposed anchorage grounds as they are already anchoring outside of the Federal Channel, off Yonkers, NY, approximately 5 to 10 nautical miles north of these proposed revised anchorage grounds.

The Coast Guard proposes to add a requirement that any vessel conducting lightering or bunkering operations shall display by day a red flag (Pub 102; International Code of Signals; signaling instructions) at its mast head or at least 10 feet above the upper deck if the vessel has no mast, and by night the flag must be illuminated by spotlight. These signals shall be in addition to day signals, lights and whistle signals as required by rules 30 (33 U.S.C 2030) and 35 (33 U.S.C. 2035) of the Inland Navigation Rules when at anchor in a general anchorage area. Within an anchorage, fishing and navigation would be prohibited within 500 yards of an anchored vessel displaying a red flag by day or a red light by night.

The Coast Guard proposes to add a regulation (33 CFR 110.155(c)950(i)(D)) to specify that these anchorage grounds are only authorized for use by tugs and/or barges.

Regulatory Analyses

We developed this proposed rule after considering numerous statutes and executive orders related to rulemaking. Below we summarize our analyses based on 13 of these statutes or executive orders.

Regulatory Planning and Review

This proposed rule is not a significant regulatory action under section 3(f) of Executive Order 12866, Regulatory Planning and Review, and does not require an assessment of potential costs and benefits under section 6(a)(3) of that Order. The Office of Management and Budget has not reviewed it under that Order.

We expect the economic impact of this proposed rule to be so minimal that a full Regulatory Evaluation is unnecessary. This conclusion is based upon the fact that there are no fees, permits, or specialized requirements for the maritime industry to utilize these anchorage areas. The regulation is solely for the purpose of advancing safety of maritime commerce.

Small Entities

Under the Regulatory Flexibility Act (5 U.S.C. 601–612), we have considered whether this proposed rule would have a significant economic impact on a substantial number of small entities. The term "small entities" comprises small businesses, not-for-profit organizations that are independently owned and operated and are not dominant in their fields, and governmental jurisdictions with populations of less than 50,000.

The Coast Guard certifies under 5 U.S.C. 605(b) that this proposed rule would not have a significant economic impact on a substantial number of small entities. This proposed rule would affect the following entities, some of which might be small entities: The owners or operators of vessels intending to transit through the proposed Anchorage Grounds 19 East and 19 West. Vessels intending to anchor in the current Anchorage Ground No. 19 would still be able to anchor in the revised Anchorage Ground No. 19 East or No. 19 West.

If you think that your business, organization, or governmental jurisdiction qualifies as a small entity and that this rule would have a significant economic impact on it, please submit a comment (*see* **ADDRESSES**) explaining why you think it qualifies and how and to what degree this rule would economically affect it.

Assistance for Small Entities

Under section 213(a) of the Small Business Regulatory Enforcement Fairness Act of 1996 (Pub. L. 104–121), we want to assist small entities in understanding this proposed rule so that they can better evaluate its effects on them and participate in the rulemaking. If the rule would affect your small business, organization, or governmental jurisdiction and you have questions concerning its provisions or options for compliance, please contact Mr. Jeff Yunker at 718–354–4195. The Coast Guard will not retaliate against small entities that question or complain about this proposed rule or any policy or action of the Coast Guard.

Collection of Information

This proposed rule would call for no new collection of information under the Paperwork Reduction Act of 1995 (44 U.S.C. 3501–3520).

Federalism

A rule has implications for federalism under Executive Order 13132, Federalism, if it has a substantial direct effect on State or local governments and would either preempt State law or impose a substantial direct cost of compliance on them. We have analyzed this proposed rule under that Order and have determined that it does not have implications for federalism.

Unfunded Mandates Reform Act

The Unfunded Mandates Reform Act of 1995 (2 U.S.C. 1531–1538) requires Federal agencies to assess the effects of their discretionary regulatory actions. In particular, the Act addresses actions that may result in the expenditure by a State, local, or tribal government, in the aggregate, or by the private sector of $100,000,000 or more in any one year. Though this proposed rule would not result in such an expenditure, we do discuss the effects of this rule elsewhere in this preamble.

Taking of Private Property

This proposed rule would not cause a taking of private property or otherwise have taking implications under Executive Order 12630, Governmental Actions and Interference with Constitutionally Protected Property Rights.

Civil Justice Reform

This proposed rule meets applicable standards in sections 3(a) and 3(b)(2) of Executive Order 12988, Civil Justice Reform, to minimize litigation, eliminate ambiguity, and reduce burden.

Protection of Children

We have analyzed this proposed rule under Executive Order 13045, Protection of Children from Environmental Health Risks and Safety Risks. This rule is not an economically significant rule and would not create an environmental risk to health or risk to safety that might disproportionately affect children.

Indian Tribal Governments

This proposed rule does not have tribal implications under Executive Order 13175, Consultation and Coordination with Indian Tribal Governments, because it would not have a substantial direct effect on one or more Indian tribes, on the relationship between the Federal Government and Indian tribes, or on the distribution of power and responsibilities between the Federal Government and Indian tribes.

Energy Effects

We have analyzed this proposed rule under Executive Order 13211, Actions Concerning Regulations That Significantly Affect Energy Supply, Distribution, or Use. We have determined that it is not a "significant energy action" under that order because it is not a "significant regulatory action" under Executive Order 12866 and is not likely to have a significant adverse effect on the supply, distribution, or use of energy. The Administrator of the Office of Information and Regulatory Affairs has not designated it as a significant energy action. Therefore, it does not require a Statement of Energy Effects under Executive Order 13211.

Technical Standards

The National Technology Transfer and Advancement Act (NTTAA) (15 U.S.C. 272 note) directs agencies to use voluntary consensus standards in their regulatory activities unless the agency provides Congress, through the Office of Management and Budget, with an explanation of why using these standards would be inconsistent with applicable law or otherwise impractical. Voluntary consensus standards are technical standards (*e.g.,* specifications of materials, performance, design, or operation; test methods; sampling procedures; and related management systems practices) that are developed or adopted by voluntary consensus standards bodies.

This proposed rule does not use technical standards. Therefore, we did not consider the use of voluntary consensus standards.

Environment

We have analyzed this proposed rule under Department of Homeland Security Management Directive 023–01 and Commandant Instruction M16475.lD, which guide the Coast Guard in complying with the National Environmental Policy Act of 1969 (NEPA) (42 U.S.C. 4321–4370f), and have made a preliminary determination that this action is one of a category of actions which do not individually or cumulatively have a significant effect on the human environment. This rule involves changing the size of anchorage grounds resulting in a reduction in the overall size of the anchorage area. We seek any comments or information that may lead to the discovery of a significant environmental impact from this proposed rule.

List of Subjects in 33 CFR Part 110

Anchorage grounds.

For the reasons discussed in the preamble, the Coast Guard proposes to amend 33 CFR part 110 as follows:

PART 110—ANCHORAGE REGULATIONS

1. The authority citation for part 110 continues to read as follows:

Authority: 33 U.S.C. 471, 1221 through 1236, 2030, 2035, 2071; 33 CFR 1.05–1; Department of Homeland Security Delegation No. 0170.1.

2. Amend § 110.155 by revising paragraph (c)(5) to read as follows:

§ 110.155 Port of New York.

* * * * *

(c) * * *

(5) *Anchorages No. 19 East and 19 West.*

(i) Anchorage No. 19 East. All waters of the Hudson River bound by the following points: 40°49′42.6″ N, 073°57′14.7″ W; thence to 40°49′45.9″ N, 073°57′22.0″ W; thence to 40°49′52.0″ N, 073°57′22.0″ W; thence to 40°50′08.3″ N, 073°57′10.8″ W; thence to 40°50′55.4″ N, 073°56′59.7″W; thence to 40°51′02.5″ N, 073°56′57.4″ W; thence to 40°51′00.8″ N, 073°56′49.4″ W; thence along the shoreline to the point of origin (NAD 83).

(ii) Anchorage No. 19 West. All waters of the Hudson River bound by the following points: 40°46′56.3″ N, 073°59′42.2″ W; thence to 40°47′36.9″ N, 073°59′11.7″ W; thence to 40°49′31.3″ N, 073°57′43.8″ W; thence to 40°49′40.2″ N, 073°57′37.6″ W; thence to 40°49′52.4″ N, 073°57′37.6″ W; thence to 40°49′57.7″ N, 073°57′47.3″ W; thence to 40°49′32.2″ N, 073°58′12.9″ W; thence to 40°49′00.7″ N, 073°58′33.1″ W; thence to 40°48′28.7″ N, 073°58′53.8″ W; thence to 40°47′38.2″ N,

073°59′31.2″ W; thence to 40°47′02.7″ N, 073°59′57.4″ W; thence to the point of origin. (NAD 83).

(iii) The following regulations apply to 33 CFR 110.155(c)(5)(i) and (ii):

(A) No vessel may conduct lightering operations in these anchorage grounds without permission from the Captain of the Port. When lightering is authorized, the Captain of the Port New York must be notified at least four hours in advance of a vessel conducting lightering operations as required by § 156.118 of this title.

(B) Any vessel conducting lightering or bunkering operations shall display by day a red flag (Pub 102; International Code of Signals; signaling instructions) at its mast head or at least 10 feet above the upper deck if the vessel has no mast, and by night the flag must be illuminated by spotlight. These signals shall be in addition to day signals, lights and whistle signals as required by rules 30 (33 U.S.C 2030) and 35 (33 U.S.C. 2035) of the Inland Navigation Rules when at anchor in a general anchorage area.

(C) Within an anchorage, fishing and navigation are prohibited within 500 yards of an anchored vessel displaying a red flag.

(D) These anchorage grounds are only authorized for use by tugs and/or barges.

(E) No vessel may occupy this anchorage ground for a period of time in excess of 96 hours without prior approval of the Captain of the Port.

(F) No vessel may anchor in Anchorage No. 19 East or No. 19 West without permission from the Captain of the Port.

(G) Each vessel shall report its position within Anchorage No. 19 East or No. 19 West to the Captain of the Port immediately after anchoring.

(H) All coordinates referenced use datum: NAD 83.

* * * * *

Joseph L. Nimmich,

Rear Admiral, U.S. Coast Guard, Commander, First Coast Guard District.

[FR Doc. 2010–9850 Filed 4–27–10; 8:45 am]

BILLING CODE 9110–04–P

DEPARTMENT OF HOMELAND SECURITY

Coast Guard

33 CFR Part 165

[Docket No. USCG–2010–0249]

RIN 1625–AA00

Safety Zone; City of Chicago's July 4th Celebration Fireworks, Lake Michigan, Chicago, IL

AGENCY: Coast Guard, DHS.

ACTION: Notice of proposed rulemaking.

SUMMARY: The Coast Guard proposes to establish a safety zone on Lake Michigan near Chicago, Illinois. This zone is intended to restrict vessels from a portion of Lake Michigan due to multiple firework displays. This proposed safety zone is necessary to protect the surrounding public and their vessels from the hazards associated with fireworks displays.

DATES: Comments and related material must be received by the Coast Guard on or before May 28, 2010.

ADDRESSES: You may submit comments identified by docket number USCG–2010–0249 using any one of the following methods:

(1) *Federal eRulemaking Portal: http://www.regulations.gov.*

(2) *Fax:* 202–493–2251.

(3) *Mail:* Docket Management Facility (M–30), U.S. Department of Transportation, West Building Ground Floor, Room W12–140, 1200 New Jersey Avenue, SE., Washington, DC 20590–0001.

(4) *Hand delivery:* Same as mail address above, between 9 a.m. and 5 p.m., Monday through Friday, except Federal holidays. The telephone number is 202–366–9329.

To avoid duplication, please use only one of these four methods. See the "Public Participation and Request for Comments" portion of the **SUPPLEMENTARY INFORMATION** section below for instructions on submitting comments.

FOR FURTHER INFORMATION CONTACT: If you have questions on this proposed rule, call or e-mail Petty Officer Adam Kraft, U.S. Coast Guard Sector Lake Michigan; telephone 414–747–7154, e-mail *Adam.D.Kraft@uscg.mil.* If you have questions on viewing or submitting material to the docket, call Renee V. Wright, Program Manager, Docket Operations, telephone 202–366–9826.

SUPPLEMENTARY INFORMATION:

Public Participation and Request for Comments

We encourage you to participate in this rulemaking by submitting comments and related materials. All comments received will be posted without change to *http://www.regulations.gov* and will include any personal information you have provided.

Submitting Comments

If you submit a comment, please include the docket number for this rulemaking (USCG–2010–0249), indicate the specific section of this document to which each comment applies, and provide a reason for each suggestion or recommendation. You may submit your comments and material online (via *http://www.regulations.gov*) or by fax, mail, or hand delivery, but please use only one of these means. If you submit a comment online via *http://www.regulations.gov,* it will be considered received by the Coast Guard when you successfully transmit the comment. If you fax, hand deliver, or mail your comment, it will be considered as having been received by the Coast Guard when it is received at the Docket Management Facility. We recommend that you include your name and a mailing address, an e-mail address, or a telephone number in the body of your document so that we can contact you if we have questions regarding your submission.

To submit your comment online, go to *http://www.regulations.gov,* click on the "submit a comment" box, which will then become highlighted in blue. In the "Document Type" drop down menu select "Proposed Rule" and insert "USCG–2010–0249" in the "Keyword" box. Click "Search" then click on the balloon shape in the "Actions" column. If you submit your comments by mail or hand delivery, submit them in an unbound format, no larger than 8½ by 11 inches, suitable for copying and electronic filing. If you submit comments by mail and would like to know that they reached the Facility, please enclose a stamped, self-addressed postcard or envelope. We will consider all comments and material received during the comment period and may change the rule based on your comments.

Viewing Comments and Documents

To view comments, as well as documents mentioned in this preamble as being available in the docket, go to *http://www.regulations.gov,* click on the "read comments" box, which will then

become highlighted in blue. In the "Keyword" box insert "USCG–2010–0249" and click "Search." Click the "Open Docket Folder" in the "Actions" column. You may also visit the Docket Management Facility in Room W12–140 on the ground floor of the Department of Transportation West Building, 1200 New Jersey Avenue, SE., Washington, DC 20590, between 9 a.m. and 5 p.m., Monday through Friday, except Federal holidays. We have an agreement with the Department of Transportation to use the Docket Management Facility.

Privacy Act

Anyone can search the electronic form of comments received into any of our dockets by the name of the individual submitting the comment (or signing the comment, if submitted on behalf of an association, business, labor union, *etc.*). You may review a Privacy Act notice regarding our public dockets in the January 17, 2008, issue of the **Federal Register** (73 FR 3316).

Public Meeting

We do not now plan to hold a public meeting. But you may submit a request for one using one of the four methods specified under **ADDRESSES**. Please explain why you believe a public meeting would be beneficial. If we determine that one would aid this rulemaking, we will hold one at a time and place announced by a later notice in the **Federal Register**.

Basis and Purpose

This safety zone is necessary to ensure the safety of vessels from the hazards associated with the City of Chicago's July 4th Celebration Fireworks. The Captain of the Port, Sector Lake Michigan, has determined that the City of Chicago's July 4th Celebration presents significant risks to public safety and property. The likely combination of congested waterways and multiple firework displays could easily result in serious injuries or fatalities. This event is replacing the usual Taste of Chicago display. This event will have a total of two displays being fired from two different locations along Chicago's lakefront.

Discussion of Proposed Rule

The proposed rule and associated safety zones are necessary to ensure the safety of vessels and people during the City of Chicago's July 4th Celebration Fireworks. The following areas are proposed safety zones: All U.S. waters of Lake Michigan within Chicago Harbor bound by a line drawn from 41°53′24″ N, 087°35′26″ W; then south to 41°53′09″ N, 087°35′26″ W; then east to 41°53′09″ N, 087°36′09″ W; then north to 41°53′24″ N, 087°36′09″ W; then west returning to the point of origin, and then all waters of Lake Michigan within the arc of a circle with a 1000-foot radius from a fireworks launch site located on a barge in position 41°58′17″ N, 087°38′25″ W. (NAD 83). The proposed safety zones will be enforced only immediately before, during, and immediately after the event and only upon notice by the Captain of the Port, Sector Lake Michigan. The proposed safety zones will be effective from 8:45 p.m. until 9:15 p.m. on July 4, 2010. The Captain of the Port, Sector Lake Michigan, will use all appropriate means to notify the public when the safety zone will be enforced, including publication in the **Federal Register** in accordance with 33 CFR 165.7(a). Means of notification may also include Broadcast Notice to Mariners or Local Notice to Mariners. The Captain of the Port, Sector Lake Michigan, will issue a Broadcast Notice to Mariners notifying the public when enforcement of the safety zone established by this section is cancelled.

All persons and vessels shall comply with the instructions of the Captain of the Port, Sector Lake Michigan, or his or her designated on-scene representative. Entry into, transiting, or anchoring within the safety zone is prohibited unless authorized by the Captain of the Port, Sector Lake Michigan, or his or her designated on-scene representative. The Captain of the Port, Sector Lake Michigan, or his or her designated on-scene representative may be contacted via VHF Channel 16.

The Coast Guard expects the temporary final rule will be effective less than 30 days after publication in the **Federal Register** because delaying the effective date would be contrary to the public interest due to the need to protect the public from the dangers associated with fireworks displays.

Regulatory Analyses

We developed this proposed rule after considering numerous statutes and executive orders related to rulemaking. Below we summarize our analyses based on 13 of these statutes or executive orders.

Regulatory Planning and Review

This proposed rule is not a significant regulatory action under section 3(f) of Executive Order 12866, Regulatory Planning and Review, and does not require an assessment of potential costs and benefits under section 6(a)(3) of that Order. The Office of Management and Budget has not reviewed it under that Order.

This is not a significant regulatory action because the safety zone will be in effect for a minimal amount of time. Plus, vessels may still transit with the permission of the Captain of the Port, Sector Lake Michigan, or his or her designated on-scene representative.

Small Entities

Under the Regulatory Flexibility Act (5 U.S.C. 601–612), we have considered whether this proposed rule would have a significant economic impact on a substantial number of small entities. The term "small entities" comprises small businesses, not-for-profit organizations that are independently owned and operated and are not dominant in their fields, and governmental jurisdictions with populations of less than 50,000.

The Coast Guard certifies under 5 U.S.C. 605(b) that this proposed rule would not have a significant economic impact on a substantial number of small entities. This rule will affect the following entities, some of which might be small entities: The owners or operators of vessels intending to transit or anchor, between 8:45 p.m. and 9:15 p.m. on July 4, 2010, in the portion of Lake Michigan within the safety zone established below.

This safety zone will not have a significant economic impact on a substantial number of small entities for the following reasons: This safety zone will be in effect for only one night and enforced for only 30 minutes. Plus, vessels may still transit through the zone with the permission of the Captain of the Port, Sector Lake Michigan, or his or her designated on-scene representative. Moreover, the Coast Guard will give notice to the public that the regulation is in effect and when it will be enforced.

If you think that your business, organization, or governmental jurisdiction qualifies as a small entity and that this rule would have a significant economic impact on it, please submit a comment (see **ADDRESSES**) explaining why you think it qualifies and how and to what degree this rule would economically affect it.

Assistance for Small Entities

Under section 213(a) of the Small Business Regulatory Enforcement Fairness Act of 1996 (Pub. L. 104–121), we want to assist small entities in understanding this proposed rule so that they can better evaluate its effects on them and participate in the rulemaking. If the rule would affect your small business, organization, or governmental jurisdiction and you have questions concerning its provisions or options for

compliance, please contact Petty Officer Adam Kraft, Prevention Department, Coast Guard Sector Lake Michigan, Milwaukee, WI at (414) 747–7154. The Coast Guard will not retaliate against small entities that question or complain about this proposed rule or any policy or action of the Coast Guard.

Collection of Information

This proposed rule would call for no new collection of information under the Paperwork Reduction Act of 1995 (44 U.S.C. 3501–3520).

Federalism

A rule has implications for federalism under Executive Order 13132, Federalism, if it has a substantial direct effect on State or local governments and would either preempt State law or impose a substantial direct cost of compliance on them. We have analyzed this proposed rule under that Order and have determined that it does not have implications for federalism.

Unfunded Mandates Reform Act

The Unfunded Mandates Reform Act of 1995 (2 U.S.C. 1531–1538) requires Federal agencies to assess the effects of their discretionary regulatory actions. In particular, the Act addresses actions that may result in the expenditure by a State, local, or tribal government, in the aggregate, or by the private sector of $100,000,000 (adjusted for inflation) or more in any one year. Though this proposed rule would not result in such an expenditure, we do discuss the effects of this rule elsewhere in this preamble.

Taking of Private Property

This proposed rule would not cause a taking of private property or otherwise have taking implications under Executive Order 12630, Governmental Actions and Interference with Constitutionally Protected Property Rights.

Civil Justice Reform

This proposed rule meets applicable standards in sections 3(a) and 3(b)(2) of Executive Order 12988, Civil Justice Reform, to minimize litigation, eliminate ambiguity, and reduce burden.

Protection of Children

We have analyzed this proposed rule under Executive Order 13045, Protection of Children from Environmental Health Risks and Safety Risks. This rule is not an economically significant rule and would not create an environmental risk to health or risk to safety that might disproportionately affect children.

Indian Tribal Governments

This proposed rule does not have tribal implications under Executive Order 13175, Consultation and Coordination with Indian Tribal Governments, because it would not have a substantial direct effect on one or more Indian tribes, on the relationship between the Federal Government and Indian tribes, or on the distribution of power and responsibilities between the Federal Government and Indian tribes.

Energy Effects

We have analyzed this proposed rule under Executive Order 13211, Actions Concerning Regulations That Significantly Affect Energy Supply, Distribution, or Use. We have determined that it is not a "significant energy action" under that order because it is not a "significant regulatory action" under Executive Order 12866 and is not likely to have a significant adverse effect on the supply, distribution, or use of energy. The Administrator of the Office of Information and Regulatory Affairs has not designated it as a significant energy action. Therefore, it does not require a Statement of Energy Effects under Executive Order 13211.

Technical Standards

The National Technology Transfer and Advancement Act (NTTAA) (15 U.S.C. 272 note) directs agencies to use voluntary consensus standards in their regulatory activities unless the agency provides Congress, through the Office of Management and Budget, with an explanation of why using these standards would be inconsistent with applicable law or otherwise impractical. Voluntary consensus standards are technical standards (*e.g.,* specifications of materials, performance, design, or operation; test methods; sampling procedures; and related management systems practices) that are developed or adopted by voluntary consensus standards bodies.

This proposed rule does not use technical standards. Therefore, we did not consider the use of voluntary consensus standards.

Environment

We have analyzed this proposed rule under Department of Homeland Security Management Directive 023–01 and Commandant Instruction M16475.lD, which guide the Coast Guard in complying with the National Environmental Policy Act of 1969 (NEPA) (42 U.S.C. 4321–4370f), and have made a preliminary determination that this action is one of a category of actions that do not individually or cumulatively have a significant effect on the human environment. A preliminary environmental analysis checklist supporting this determination is available in the docket where indicated under **ADDRESSES**. This proposed rule involves the establishment of a safety zone therefore paragraph 34(g) of the Instruction applies. We seek any comments or information that may lead to the discovery of a significant environmental impact from this proposed rule.

List of Subjects in 33 CFR Part 165

Harbors, Marine safety, Navigation (water), Reporting and recordkeeping requirements, Security measures, Waterways.

For the reasons discussed in the preamble, the Coast Guard proposes to amend 33 CFR Part 165 as follows:

PART 165—REGULATED NAVIGATION AREAS AND LIMITED ACCESS AREAS

1. The authority citation for Part 165 continues to read as follows:

Authority: 33 U.S.C. 1226, 1231; 46 U.S.C. Chapter 701, 3306, 3703; 50 U.S.C. 191, 195; 33 CFR 1.05–1, 6.04–1, 6.04–6, and 160.5; Pub. L. 107–295, 116 Stat. 2064; Department of Homeland Security Delegation No. 0170.1.

§ 165.T09–XXXX Safety Zone; City of Chicago's July 4th Celebration Fireworks, Lake Michigan, Chicago, IL.

(a) *Location.* The following two area's are temporary safety zone's: All U.S. waters of Lake Michigan within Chicago Harbor bound by a line drawn from 41°53′24″ N, 087°35′26″ W; then south to 41°53′09″ N, 087°35′26″ W; then east to 41°53′09″ N, 087°36′09″ W; then north to 41°53′24″ N, 087°36′09″ W; then west returning to the point of origin and then all waters of Lake Michigan within the arc of a circle with a 1,000-foot radius from a fireworks launch site located on a barge in position 41°58′17″ N, 087°38′25″ W. (NAD 83).

(b) *Effective period.* This regulation is effective from 8:45 p.m. until 9:15 p.m. on July 4, 2010. It will be enforced between 8:45 p.m. and 9:15 p.m. on July 4, 2010. The Captain of the Port, Sector Lake Michigan, or his or her on-scene representative may terminate this operation at anytime.

(c) *Regulations.* (1) In accordance with the general regulations in section 165.23 of this part, entry into, transiting, or anchoring in this safety zone is prohibited unless authorized by the Captain of the Port, Sector Lake Michigan, or his or her designated on-scene representative.

(2) This safety zone is closed to all vessel traffic except as permitted by the Captain of the Port, Sector Lake Michigan, or his or her designated on-scene representative.

(3) The "on-scene representative" of the Captain of the Port, Sector Lake Michigan, is any Coast Guard commissioned, warrant, or petty officer who has been designated by the Captain of the Port, Sector Lake Michigan, to act on his or her behalf. The on-scene representative of the Captain of the Port, Sector Lake Michigan, will be aboard either a Coast Guard or Coast Guard Auxiliary vessel. The Captain of the Port, Sector Lake Michigan, or his or her designated on-scene representative may be contacted via VHF Channel 16.

(4) Vessel operators desiring to enter or operate within the safety zone shall contact the Captain of the Port, Sector Lake Michigan, or his or her designated on-scene representative to obtain permission to do so. Vessel operators given permission to enter or operate in the safety zone must comply with all directions given to them by the Captain of the Port, Sector Lake Michigan, or his or her on-scene representative.

Dated: April 8, 2010.

L. Barndt,

Captain, U.S. Coast Guard, Captain of the Port, Sector Lake Michigan.

[FR Doc. 2010–9845 Filed 4–27–10; 8:45 am]

BILLING CODE 9110–04–P

DEPARTMENT OF HOMELAND SECURITY

Coast Guard

33 CFR Part 165

[Docket No. USCG–2010–0235]

RIN 1625–AA00

Safety Zone; Michigan City Super Boat Grand Prix, Lake Michigan, Michigan City, IN

AGENCY: Coast Guard, DHS.

ACTION: Notice of proposed rulemaking.

SUMMARY: The Coast Guard proposes to establish a temporary safety zone on Lake Michigan near Michigan City, Indiana. This zone is intended to restrict vessels from a portion of Lake Michigan due to high speed power boat racing. This proposed safety zone is necessary to protect the public and their vessels from the hazards associated with high speed power boat racing.

DATES: Comments and related material must be received by the Coast Guard on or before May 28, 2010.

ADDRESSES: You may submit comments identified by docket number USCG–2010–0235 using any one of the following methods:

(1) *Federal eRulemaking Portal: http://www.regulations.gov.*

(2) *Fax:* 202–493–2251.

(3) *Mail:* Docket Management Facility (M–30), U.S. Department of Transportation, West Building Ground Floor, Room W12–140, 1200 New Jersey Avenue, SE., Washington, DC 20590–0001.

(4) *Hand delivery:* Same as mail address above, between 9 a.m. and 5 p.m., Monday through Friday, except Federal holidays. The telephone number is 202–366–9329.

To avoid duplication, please use only one of these four methods. See the "Public Participation and Request for Comments" portion of the **SUPPLEMENTARY INFORMATION** section below for instructions on submitting comments.

FOR FURTHER INFORMATION CONTACT: If you have questions on this proposed rule, call or e-mail Petty Officer Adam Kraft, U.S. Coast Guard Sector Lake Michigan; telephone 414–747–7154, e-mail *Adam.D.Kraft@uscg.mil.* If you have questions on viewing or submitting material to the docket, call Renee V. Wright, Program Manager, Docket Operations, telephone 202–366–9826.

SUPPLEMENTARY INFORMATION:

Public Participation and Request for Comments

We encourage you to participate in this rulemaking by submitting comments and related materials. All comments received will be posted without change to *http://www.regulations.gov* and will include any personal information you have provided.

Submitting Comments

If you submit a comment, please include the docket number for this rulemaking (USCG–2010–0235), indicate the specific section of this document to which each comment applies, and provide a reason for each suggestion or recommendation. You may submit your comments and material online (via *http://www.regulations.gov*) or by fax, mail, or hand delivery, but please use only one of these means. If you submit a comment online via *http://www.regulations.gov,* it will be considered received by the Coast Guard when you successfully transmit the comment. If you fax, hand deliver, or mail your comment, it will be considered as having been received by the Coast Guard when it is received at the Docket Management Facility. We recommend that you include your name and a mailing address, an e-mail address, or a telephone number in the body of your document so that we can contact you if we have questions regarding your submission.

To submit your comment online, go to *http://www.regulations.gov,* click on the "submit a comment" box, which will then become highlighted in blue. In the "Document Type" drop down menu select "Proposed Rule" and insert "USCG–2010–0235" in the "Keyword" box. Click "Search" then click on the balloon shape in the "Actions" column. If you submit your comments by mail or hand delivery, submit them in an unbound format, no larger than 8½ by 11 inches, suitable for copying and electronic filing. If you submit comments by mail and would like to know that they reached the Facility, please enclose a stamped, self-addressed postcard or envelope. We will consider all comments and material received during the comment period and may change the rule based on your comments.

Viewing Comments and Documents

To view comments, as well as documents mentioned in this preamble as being available in the docket, go to *http://www.regulations.gov,* click on the "read comments" box, which will then become highlighted in blue. In the "Keyword" box insert "USCG–2010–0235" and click "Search." Click the "Open Docket Folder" in the "Actions" column. You may also visit the Docket Management Facility in Room W12–140 on the ground floor of the Department of Transportation West Building, 1200 New Jersey Avenue, SE., Washington, DC 20590, between 9 a.m. and 5 p.m., Monday through Friday, except Federal holidays. We have an agreement with the Department of Transportation to use the Docket Management Facility.

Privacy Act

Anyone can search the electronic form of comments received into any of our dockets by the name of the individual submitting the comment (or signing the comment, if submitted on behalf of an association, business, labor union, etc.). You may review a Privacy Act notice regarding our public dockets in the January 17, 2008, issue of the **Federal Register** (73 FR 3316).

Public Meeting

We do not now plan to hold a public meeting. But you may submit a request for one using one of the four methods specified under **ADDRESSES**. Please

explain why you believe a public meeting would be beneficial. If we determine that one would aid this rulemaking, we will hold one at a time and place announced by a later notice in the **Federal Register**.

Basis and Purpose

This safety zone is necessary to ensure the safety of vessels from the hazards associated with the Michigan City Super Boat Grand Prix. The Captain of the Port, Sector Lake Michigan, has determined that the Michigan City Super Boat Grand Prix presents significant risks to public safety and property. The likely combination of congested waterways and high speed boat racing could easily result in serious injuries or fatalities. Last year this event occurred with a slightly different safety zone in effect. The zone provided a safe environment for the public to enjoy these high speed boat races.

Discussion of Proposed Rule

The proposed rule and associated safety zone is necessary to ensure the safety of vessels and people during the Michigan City Super Boat Grand Prix. The Coast Guard proposes establishing a temporary safety zone located on Lake Michigan offshore of Long Beach in Michigan City, Indiana. The proposed safety zone will be 4500 yards by 600 yards, encompassing specified U.S. waters bound by a line drawn from 41°43′42″ N, 086°54′18″ W; then north to 41°43′49″ N, 086°54′31″ W; then east to 41°44′48″ N, 086°51′45″ W; then south to 41°44′42″ N, 086°51′31″ W; then west returning to the point of origin (NAD 83). The proposed safety zone will be enforced from 9 a.m. until 4 p.m. on August 08, 2010; only immediately before, during, and immediately after the event and only upon notice by the Captain of the Port, Sector Lake Michigan. The Captain of the Port, Sector Lake Michigan, will use all appropriate means to notify the public when the safety zone will be enforced, including publication in the **Federal Register** in accordance with 33 CFR 165.7(a). Means of notification may also include Broadcast Notice to Mariners or Local Notice to Mariners. The Captain of the Port, Sector Lake Michigan, will issue a Broadcast Notice to Mariners notifying the public when enforcement of the safety zone established by this section is cancelled.

All persons and vessels shall comply with the instructions of the Captain of the Port, Sector Lake Michigan, or his or her designated on-scene representative. Entry into, transiting, or anchoring within the safety zone is prohibited unless authorized by the Captain of the Port, Sector Lake Michigan, or his or her designated on-scene representative. The Captain of the Port, Sector Lake Michigan, or his or her designated on-scene representative may be contacted via VHF Channel 16.

Regulatory Analyses

We developed this proposed rule after considering numerous statutes and executive orders related to rulemaking. Below we summarize our analyses based on 13 of these statutes or executive orders.

Regulatory Planning and Review

This proposed rule is not a significant regulatory action under section 3(f) of Executive Order 12866, Regulatory Planning and Review, and does not require an assessment of potential costs and benefits under section 6(a)(3) of that Order. The Office of Management and Budget has not reviewed it under that Order.

This is not a significant regulatory action because the safety zone will be in effect for a minimal amount of time. Plus, vessels may still transit with the permission of the Captain of the Port, Sector Lake Michigan, or his or her designated on-scene representative.

Small Entities

Under the Regulatory Flexibility Act (5 U.S.C. 601–612), we have considered whether this proposed rule would have a significant economic impact on a substantial number of small entities. The term "small entities" comprises small businesses, not-for-profit organizations that are independently owned and operated and are not dominant in their fields, and governmental jurisdictions with populations of less than 50,000.

The Coast Guard certifies under 5 U.S.C. 605(b) that this proposed rule would not have a significant economic impact on a substantial number of small entities. This rule will affect the following entities, some of which might be small entities: The owners or operators of vessels intending to transit or anchor, between 9 a.m. and 4 p.m. on August 08, 2010, in the portion of Lake Michigan within the safety zone established below.

This safety zone will not have a significant economic impact on a substantial number of small entities for the following reasons: This safety zone will be in effect for only and enforced for only a few hours. Plus, vessels may still transit through the zone with the permission of the Captain of the Port, Sector Lake Michigan, or his or her designated on-scene representative. Moreover, the Coast Guard will give notice to the public that the regulation is in effect and when it will be enforced.

If you think that your business, organization, or governmental jurisdiction qualifies as a small entity and that this rule would have a significant economic impact on it, please submit a comment (*see* **ADDRESSES**) explaining why you think it qualifies and how and to what degree this rule would economically affect it.

Assistance for Small Entities

Under section 213(a) of the Small Business Regulatory Enforcement Fairness Act of 1996 (Pub. L. 104–121), we want to assist small entities in understanding this proposed rule so that they can better evaluate its effects on them and participate in the rulemaking. If the rule would affect your small business, organization, or governmental jurisdiction and you have questions concerning its provisions or options for compliance, please contact Petty Officer Adam Kraft, Prevention Department, Coast Guard Sector Lake Michigan, Milwaukee, WI at (414) 747–7154. The Coast Guard will not retaliate against small entities that question or complain about this proposed rule or any policy or action of the Coast Guard.

Collection of Information

This proposed rule would call for no new collection of information under the Paperwork Reduction Act of 1995 (44 U.S.C. 3501–3520).

Federalism

A rule has implications for federalism under Executive Order 13132, Federalism, if it has a substantial direct effect on State or local governments and would either preempt State law or impose a substantial direct cost of compliance on them. We have analyzed this proposed rule under that Order and have determined that it does not have implications for federalism.

Unfunded Mandates Reform Act

The Unfunded Mandates Reform Act of 1995 (2 U.S.C. 1531–1538) requires Federal agencies to assess the effects of their discretionary regulatory actions. In particular, the Act addresses actions that may result in the expenditure by a State, local, or tribal government, in the aggregate, or by the private sector of $100,000,000 (adjusted for inflation) or more in any one year. Though this proposed rule would not result in such an expenditure, we do discuss the effects of this rule elsewhere in this preamble.

Taking of Private Property

This proposed rule would not cause a taking of private property or otherwise have taking implications under Executive Order 12630, Governmental Actions and Interference with Constitutionally Protected Property Rights.

Civil Justice Reform

This proposed rule meets applicable standards in sections 3(a) and 3(b)(2) of Executive Order 12988, Civil Justice Reform, to minimize litigation, eliminate ambiguity, and reduce burden.

Protection of Children

We have analyzed this proposed rule under Executive Order 13045, Protection of Children from Environmental Health Risks and Safety Risks. This rule is not an economically significant rule and would not create an environmental risk to health or risk to safety that might disproportionately affect children.

Indian Tribal Governments

This proposed rule does not have tribal implications under Executive Order 13175, Consultation and Coordination with Indian Tribal Governments, because it would not have a substantial direct effect on one or more Indian tribes, on the relationship between the Federal Government and Indian tribes, or on the distribution of power and responsibilities between the Federal Government and Indian tribes.

Energy Effects

We have analyzed this proposed rule under Executive Order 13211, Actions Concerning Regulations That Significantly Affect Energy Supply, Distribution, or Use. We have determined that it is not a "significant energy action" under that order because it is not a "significant regulatory action" under Executive Order 12866 and is not likely to have a significant adverse effect on the supply, distribution, or use of energy. The Administrator of the Office of Information and Regulatory Affairs has not designated it as a significant energy action. Therefore, it does not require a Statement of Energy Effects under Executive Order 13211.

Technical Standards

The National Technology Transfer and Advancement Act (NTTAA) (15 U.S.C. 272 note) directs agencies to use voluntary consensus standards in their regulatory activities unless the agency provides Congress, through the Office of Management and Budget, with an explanation of why using these standards would be inconsistent with applicable law or otherwise impractical. Voluntary consensus standards are technical standards (*e.g.,* specifications of materials, performance, design, or operation; test methods; sampling procedures; and related management systems practices) that are developed or adopted by voluntary consensus standards bodies.

This proposed rule does not use technical standards. Therefore, we did not consider the use of voluntary consensus standards.

Environment

We have analyzed this proposed rule under Department of Homeland Security Management Directive 023–01 and Commandant Instruction M16475.lD, which guide the Coast Guard in complying with the National Environmental Policy Act of 1969 (NEPA) (42 U.S.C. 4321–4370f), and have made a preliminary determination that this action is one of a category of actions that do not individually or cumulatively have a significant effect on the human environment. A preliminary environmental analysis checklist supporting this determination is available in the docket where indicated under **ADDRESSES**. This proposed rule involves the establishment of a safety zone therefore paragraph 34(g) of the Instruction applies. We seek any comments or information that may lead to the discovery of a significant environmental impact from this proposed rule.

List of Subjects in 33 CFR Part 165

Harbors, Marine safety, Navigation (water), Reporting and recordkeeping requirements, Security measures, Waterways.

For the reasons discussed in the preamble, the Coast Guard proposes to amend 33 CFR part 165 as follows:

PART 165—REGULATED NAVIGATION AREAS AND LIMITED ACCESS AREAS

1. The authority citation for part 165 continues to read as follows:

Authority: 33 U.S.C. 1226, 1231; 46 U.S.C. Chapter 701, 3306, 3703; 50 U.S.C. 191, 195; 33 CFR 1.05–1, 6.04–1, 6.04–6, and 160.5; Pub. L. 107–295, 116 Stat. 2064; Department of Homeland Security Delegation No. 0170.1.

2. Add § 165.T09–0235 to read as follows:

§ 165.T09–0235 Safety Zone; Michigan City Super Boat Grand Prix, Lake Michigan, Michigan City, IN.

(a) *Location.* The following area is a temporary safety zone: offshore of Long Beach in Michigan City, Indiana, a 4500 yard by 600 yard area encompassing specified U.S. waters of Lake Michigan bound by a line drawn from 41°43′42″ N, 086°54′18″ W; then north to 41°43′49″ N, 086°54′31″ W; then east to 41°44′48″ N, 086°51′45″ W; then south to 41°44′42″ N, 086°51′31″ W; then west returning to the point of origin (NAD 83).

(b) *Effective period.* This regulation is effective and will be enforced from 9 a.m. until 4 p.m. on August 08, 2010. The Captain of the Port, Sector Lake Michigan, or his or her on-scene representative may terminate this operation at anytime.

(c) *Regulations.* (1) In accordance with the general regulations in section 165.23 of this part, entry into, transiting, or anchoring in this safety zone is prohibited unless authorized by the Captain of the Port, Sector Lake Michigan, or his or her designated on-scene representative.

(2) This safety zone is closed to all vessel traffic except as permitted by the Captain of the Port, Sector Lake Michigan, or his or her designated on-scene representative.

(3) The "on-scene representative" of the Captain of the Port, Sector Lake Michigan, is any Coast Guard commissioned, warrant, or petty officer who has been designated by the Captain of the Port, Sector Lake Michigan, to act on his or her behalf. The on-scene representative of the Captain of the Port, Sector Lake Michigan, will be aboard either a Coast Guard or Coast Guard Auxiliary vessel. The Captain of the Port, Sector Lake Michigan, or his or her designated on-scene representative may be contacted via VHF Channel 16.

(4) Vessel operators desiring to enter or operate within the safety zone shall contact the Captain of the Port, Sector Lake Michigan, or his or her designated on-scene representative to obtain permission to do so. Vessel operators given permission to enter or operate in the safety zone must comply with all directions given to them by the Captain of the Port, Sector Lake Michigan, or his or her on-scene representative.

Dated: April 8, 2010.

L. Barndt,

Captain, U.S. Coast Guard, Captain of the Port, Sector Lake Michigan.

[FR Doc. 2010–9848 Filed 4–27–10; 8:45 am]

BILLING CODE 9110–04–P

DEPARTMENT OF HOMELAND SECURITY

Coast Guard

33 CFR Part 165

[Docket No. USCG–2010–0214]

RIN 1625–AA00

Safety Zone; North Jetty, Named the Barview Jetty, Tillamook Bay, OR

AGENCY: Coast Guard, DHS.

ACTION: Notice of proposed rulemaking.

SUMMARY: The Coast Guard proposes the establishment of a safety zone surrounding the north jetty, named the Barview Jetty near Tillamook Bay, Oregon. The safety zone is necessary to help ensure the safety of work crews and the maritime public while the jetty is being repaired and will do so by prohibiting all persons and vessels from entering or remaining within 250 feet of the jetty unless specifically authorized by the Captain of the Port or his designated representative.

DATES: Comments and related material must be received by the Coast Guard on or before May 28, 2010.

ADDRESSES: You may submit comments identified by docket number USCG–2010–0214 using any one of the following methods:

(1) *Federal eRulemaking Portal: http://www.regulations.gov.*

(2) *Fax:* 202–493–2251.

(3) *Mail:* Docket Management Facility (M–30), U.S. Department of Transportation, West Building Ground Floor, Room W12–140, 1200 New Jersey Avenue, SE., Washington, DC 20590–0001.

(4) *Hand delivery:* Same as mail address above, between 9 a.m. and 5 p.m., Monday through Friday, except Federal holidays. The telephone number is 202–366–9329.

To avoid duplication, please use only one of these four methods. See the "Public Participation and Request for Comments" portion of the **SUPPLEMENTARY INFORMATION** section below for instructions on submitting comments.

FOR FURTHER INFORMATION CONTACT: If you have questions on this proposed rule, call or e-mail MST1 Jaime Sayers, Waterways Management Division, Coast Guard Sector Portland; telephone 503–240–9319, e-mail *Jaime.A.Sayers@uscg.mil.* If you have questions on viewing or submitting material to the docket, call Renee V. Wright, Program Manager, Docket Operations, telephone 202–366–9826.

SUPPLEMENTARY INFORMATION:

Public Participation and Request for Comments

We encourage you to participate in this rulemaking by submitting comments and related materials. All comments received will be posted without change to *http://www.regulations.gov* and will include any personal information you have provided.

Submitting Comments

If you submit a comment, please include the docket number for this rulemaking (USCG–2010–0214), indicate the specific section of this document to which each comment applies, and provide a reason for each suggestion or recommendation. You may submit your comments and material online (via *http://www.regulations.gov*) or by fax, mail, or hand delivery, but please use only one of these means. If you submit a comment online via *http://www.regulations.gov*, it will be considered received by the Coast Guard when you successfully transmit the comment. If you fax, hand deliver, or mail your comment, it will be considered as having been received by the Coast Guard when it is received at the Docket Management Facility. We recommend that you include your name and a mailing address, an e-mail address, or a telephone number in the body of your document so that we can contact you if we have questions regarding your submission.

To submit your comment online, go to *http://www.regulations.gov*, click on the "submit a comment" box, which will then become highlighted in blue. In the "Document Type" drop down menu select "Proposed Rule" and insert "USCG–2010–0214" in the "Keyword" box. Click "Search" then click on the balloon shape in the "Actions" column. If you submit your comments by mail or hand delivery, submit them in an unbound format, no larger than 8½ by 11 inches, suitable for copying and electronic filing. If you submit comments by mail and would like to know that they reached the Facility, please enclose a stamped, self-addressed postcard or envelope. We will consider all comments and material received during the comment period and may change the rule based on your comments.

Viewing Comments and Documents

To view comments, as well as documents mentioned in this preamble as being available in the docket, go to *http://www.regulations.gov*, click on the "read comments" box, which will then become highlighted in blue. In the "Keyword" box insert "USCG–2010–0214" and click "Search." Click the "Open Docket Folder" in the "Actions" column. You may also visit the Docket Management Facility in Room W12–140 on the ground floor of the Department of Transportation West Building, 1200 New Jersey Avenue, SE., Washington, DC 20590, between 9 a.m. and 5 p.m., Monday through Friday, except Federal holidays. We have an agreement with the Department of Transportation to use the Docket Management Facility.

Privacy Act

Anyone can search the electronic form of comments received into any of our dockets by the name of the individual submitting the comment (or signing the comment, if submitted on behalf of an association, business, labor union, *etc.*). You may review a Privacy Act notice regarding our public dockets in the January 17, 2008, issue of the **Federal Register** (73 FR 3316).

Public Meeting

We do not now plan to hold a public meeting. But you may submit a request for one using one of the four methods specified under **ADDRESSES**. Please explain why you believe a public meeting would be beneficial. If we determine that one would aid this rulemaking, we will hold one at a time and place announced by a later notice in the **Federal Register**.

Basis and Purpose

The north jetty, named the Barview Jetty, near Tillamook Bay, Oregon has deteriorated to the point that the United States Army Corps of Engineers has contracted Kiewit Corporation to repair the jetty. The repairs will begin in June 2010 and will involve the use of a track mounted Manitowoc 18,000 lb crane with as much as 200 feet of boom. The crane will be used to move large granite boulders weighing approximately 20 to 50 tons each by lifting them up, circling them out over the waterway on either side of the north jetty, and placing them into the jetty.

Due to the inherent dangers associated with such operations, the Coast Guard is proposing the establishment of a safety zone covering all waters within 250 feet in every direction of the north jetty, named the Barview Jetty. The safety zone will help ensure the safety of work crews and the maritime public while the jetty is being repaired by prohibiting all persons and vessels from entering or remaining in the zone unless specifically authorized

by the Captain of the Port or his designated representative.

Discussion of Proposed Rule

The proposed safety zone created by this rule will be in effect from 12:01 a.m. June 15, 2010 until 11:59 p.m. September 30, 2010. The proposed safety zone will cover all waters within 250 feet in every direction of the north jetty, named the Barview Jetty, near Tillamook Bay, Oregon starting at latitude 45°34′12″ N, longitude 123°57′31″ W; thence heading offshore to latitude 45°34′12″ N, longitude 123°57′02″ W; thence across the tip of the jetty to latitude 45°34′17.5″ N, longitude 123°57′02″ W; thence back inland to latitude 45°34′15″ N, longitude 123°57′31″ W. All persons and vessels will be prohibited from entering or remaining in the zone unless specifically authorized by the Captain of the Port or his designated representative. Unless other safety concerns exist, maritime traffic will generally be given permission to transit the zone when work is not actively being conducted.

The Coast Guard expects the temporary final rule will be effective less than 30 days after publication in the **Federal Register** because delaying the effective date would be contrary to the public interest due to the need to protect the public from the dangers associated with construction projects, such as the use of heavy machinery in jetty repair operations.

Regulatory Analyses

We developed this proposed rule after considering numerous statutes and executive orders related to rulemaking. Below we summarize our analyses based on 13 of these statutes or executive orders.

Regulatory Planning and Review

This proposed rule is not a significant regulatory action under section 3(f) of Executive Order 12866, Regulatory Planning and Review, and does not require an assessment of potential costs and benefits under section 6(a)(3) of that Order. The Office of Management and Budget has not reviewed it under that Order. Although this proposed regulation restricts access to the safety zone, the effect of the rule will not be significant because: (i) The safety zone will only be in effect during the 3½ months repairs are being made to the north jetty, named the Barview Jetty; (ii) the zone is of limited size; and (iii) maritime traffic will be able to transit the zone with the permission of the Captain of the Port or his designated representative.

Small Entities

Under the Regulatory Flexibility Act (5 U.S.C. 601–612), we have considered whether this proposed rule would have a significant economic impact on a substantial number of small entities. The term "small entities" comprises small businesses, not-for-profit organizations that are independently owned and operated and are not dominant in their fields, and governmental jurisdictions with populations of less than 50,000.

The Coast Guard certifies under 5 U.S.C. 605(b) that this proposed rule would not have a significant economic impact on a substantial number of small entities. This rule may affect the following entities some of which may be small entities: The owners and operators of vessels intending to operate in the area covered by the safety zone. The safety zone will not have a significant economic impact on a substantial number of small entities, however, because the safety zone will only be in effect during the 3½ months repairs are being made to the north jetty, named the Barview Jetty, and maritime traffic will be able to transit the zone with the permission of the Captain of the Port or his designated representative.

If you think that your business, organization, or governmental jurisdiction qualifies as a small entity and that this rule would have a significant economic impact on it, please submit a comment (*see* **ADDRESSES**) explaining why you think it qualifies and how and to what degree this rule would economically affect it.

Assistance for Small Entities

Under section 213(a) of the Small Business Regulatory Enforcement Fairness Act of 1996 (Pub. L. 104–121), we want to assist small entities in understanding this proposed rule so that they can better evaluate its effects on them and participate in the rulemaking. If the rule would affect your small business, organization, or governmental jurisdiction and you have questions concerning its provisions or options for compliance, please contact MST1 Jaime Sayers at phone number 503–240–9319 or by e-mail at *Jaime.A.Sayers@uscg.mil.* The Coast Guard will not retaliate against small entities that question or complain about this proposed rule or any policy or action of the Coast Guard.

Collection of Information

This proposed rule would call for no new collection of information under the Paperwork Reduction Act of 1995 (44 U.S.C. 3501–3520).

Federalism

A rule has implications for federalism under Executive Order 13132, Federalism, if it has a substantial direct effect on State or local governments and would either preempt State law or impose a substantial direct cost of compliance on them. We have analyzed this proposed rule under that Order and have determined that it does not have implications for federalism.

Unfunded Mandates Reform Act

The Unfunded Mandates Reform Act of 1995 (2 U.S.C. 1531–1538) requires Federal agencies to assess the effects of their discretionary regulatory actions. In particular, the Act addresses actions that may result in the expenditure by a State, local, or Tribal government, in the aggregate, or by the private sector of $100,000,000 (adjusted for inflation) or more in any one year. Though this proposed rule would not result in such an expenditure, we do discuss the effects of this rule elsewhere in this preamble.

Taking of Private Property

This proposed rule would not cause a taking of private property or otherwise have taking implications under Executive Order 12630, Governmental Actions and Interference with Constitutionally Protected Property Rights.

Civil Justice Reform

This proposed rule meets applicable standards in sections 3(a) and 3(b)(2) of Executive Order 12988, Civil Justice Reform, to minimize litigation, eliminate ambiguity, and reduce burden.

Protection of Children

We have analyzed this proposed rule under Executive Order 13045, Protection of Children from Environmental Health Risks and Safety Risks. This rule is not an economically significant rule and would not create an environmental risk to health or risk to safety that might disproportionately affect children.

Indian Tribal Governments

This proposed rule does not have Tribal implications under Executive Order 13175, Consultation and Coordination with Indian Tribal Governments, because it would not have a substantial direct effect on one or more Indian Tribes, on the relationship between the Federal Government and Indian Tribes, or on the distribution of power and responsibilities between the Federal Government and Indian Tribes.

Energy Effects

We have analyzed this proposed rule under Executive Order 13211, Actions Concerning Regulations That Significantly Affect Energy Supply, Distribution, or Use. We have determined that it is not a "significant energy action" under that order because it is not a "significant regulatory action" under Executive Order 12866 and is not likely to have a significant adverse effect on the supply, distribution, or use of energy. The Administrator of the Office of Information and Regulatory Affairs has not designated it as a significant energy action. Therefore, it does not require a Statement of Energy Effects under Executive Order 13211.

Technical Standards

The National Technology Transfer and Advancement Act (NTTAA) (15 U.S.C. 272 note) directs agencies to use voluntary consensus standards in their regulatory activities unless the agency provides Congress, through the Office of Management and Budget, with an explanation of why using these standards would be inconsistent with applicable law or otherwise impractical. Voluntary consensus standards are technical standards (*e.g.*, specifications of materials, performance, design, or operation; test methods; sampling procedures; and related management systems practices) that are developed or adopted by voluntary consensus standards bodies.

This proposed rule does not use technical standards. Therefore, we did not consider the use of voluntary consensus standards.

Environment

We have analyzed this proposed rule under Department of Homeland Security Management Directive 023–01 and Commandant Instruction M16475.lD, which guide the Coast Guard in complying with the National Environmental Policy Act of 1969 (NEPA) (42 U.S.C. 4321–4370f), and have made a preliminary determination that this action is one of a category of actions that do not individually or cumulatively have a significant effect on the human environment. A preliminary environmental analysis checklist supporting this determination is available in the docket where indicated under **ADDRESSES**. This proposed rule involves the establishment of a safety zone. We seek any comments or information that may lead to the discovery of a significant environmental impact from this proposed rule.

List of Subjects in 33 CFR Part 165

Harbors, Marine safety, Navigation (water), Reporting and recordkeeping requirements, Security measures, Waterways.

For the reasons discussed in the preamble, the Coast Guard proposes to amend 33 CFR part 165 as follows:

PART 165—REGULATED NAVIGATION AREAS AND LIMITED ACCESS AREAS

1. The authority citation for part 165 continues to read as follows:

Authority: 33 U.S.C. 1226, 1231; 46 U.S.C. Chapter 701, 3306, 3703; 50 U.S.C. 191, 195; 33 CFR 1.05–1, 6.04–1, 6.04–6, 160.5; Pub. L. 107–295, 116 Stat. 2064; Department of Homeland Security Delegation No. 0170.1.

2. Add § 165.T13–137 to read as follows:

§ 165.T13–137 Safety Zone; North Jetty, Named the Barview Jetty, Tillamook Bay, OR.

(a) *Location.* The following area is a safety zone: All waters within 250 feet in every direction of the north jetty, named the Barview Jetty, near Tillamook Bay, Oregon starting at latitude 45°34′12″ N, longitude 123°57′31″ W; thence heading offshore to latitude 45°34′12″ N, longitude 123°57′02″ W; thence across the tip of the jetty to latitude 45°34′17.5″ N, longitude 123°57′02″ W; thence back inland to latitude 45°34′15″ N, longitude 123°57′31″ W.

(b) *Regulations.* In accordance with the general regulations in 33 CFR Part 165, Subpart C, no person may enter or remain in the safety zone created in paragraph (a) of this section or bring, cause to be brought, or allow to remain in the safety zone created in paragraph (a) of this section any vehicle, vessel or object unless authorized by the Captain of the Port or his designated representative.

(c) *Effective Period.* The safety zone created in paragraph (a) of this section will be in effect from 12:01 a.m. June 15, 2010 until 11:59 p.m. September 30, 2010.

Dated: April 14, 2010.

F.G. Myer,

Captain, U.S. Coast Guard, Captain of the Port, Portland.

[FR Doc. 2010–9839 Filed 4–27–10; 8:45 am]

BILLING CODE 9110–04–P

FEDERAL COMMUNICATIONS COMMISSION

47 CFR Part 20

[WT Docket No. 05–265; FCC 10–59]

Reexamination of Roaming Obligations of Commercial Mobile Radio Service Providers

AGENCY: Federal Communications Commission.

ACTION: Proposed rule.

SUMMARY: The Commission addresses in this Second Further Notice of Proposed Rulemaking (Second FNPRM) whether to extend roaming obligations to data services that are provided without interconnection to the public switched network—including mobile broadband services.

DATES: Interested parties may file comments on or before June 14, 2010, and reply comments on or before July 12, 2010.

ADDRESSES: Comments may be filed using: (1) The Commission's Electronic Comment Filing System (ECFS), (2) the Federal Government's eRulemaking Portal, or (3) by filing paper copies. *See Electronic Filing of Documents in Rulemaking Proceedings, 63 FR 24121 (1998).*

- *Electronic Filers:* Comments may be filed electronically using the Internet by accessing the ECFS: *http://fjallfoss.fcc.gov/ecfs2/or* the Federal eRulemaking Portal: *http://www.regulations.gov.*
- *Paper Filers:* Parties who choose to file by paper must file an original and four copies of each filing. If more than one docket or rulemaking number appears in the caption of this proceeding, filers must submit two additional copies for each additional docket or rulemaking number.

Filings can be sent by hand or messenger delivery, by commercial overnight courier, or by first-class or overnight U.S. Postal Service mail. All filings must be addressed to the Commission's Secretary, Office of the Secretary, Federal Communications Commission.

- All hand-delivered or messenger-delivered paper filings for the Commission's Secretary must be delivered to FCC Headquarters at 445 12th St., SW., Room TW–A325, Washington, DC 20554. The filing hours are 8 a.m. to 7 p.m. All hand deliveries must be held together with rubber bands or fasteners. Any envelopes must be disposed of *before* entering the building.
- Commercial overnight mail (other than U.S. Postal Service Express Mail

and Priority Mail) must be sent to 9300 East Hampton Drive, Capitol Heights, MD 20743.

- U.S. Postal Service first-class, Express, and Priority mail must be addressed to 445 12th Street, SW., Washington, DC 20554.

People with Disabilities: To request materials in accessible formats for people with disabilities (braille, large print, electronic files, audio format), send an e-mail to *fcc504@fcc.gov* or call the Consumer & Governmental Affairs Bureau at 202–418–0530 (voice), 202–418–0432 (TTY).

FOR FURTHER INFORMATION CONTACT: For further information concerning this proceeding, please contact Peter Trachtenberg, Spectrum and Competition Policy Division at 202–418–7369, Christina Clearwater, Spectrum and Competition Policy Division at 202–418–1893 or Nese Guendelsberger, Spectrum and Competition Policy Division at 202–418–0634.

SUPPLEMENTARY INFORMATION: This is a summary of the Commission's rules noted in the Order on Reconsideration and Second Further Notice of Proposed Rulemaking in WT Docket No. 05–265; FCC 10–59, adopted April 21, 2010, and released on April 21, 2010. This summary should be read with its companion document, the Order on Reconsideration summary published elsewhere in this issue of the **Federal Register.** The full text of the Order on Reconsideration and Second Further Notice of Proposed Rulemaking is available for public inspection and copying during business hours in the FCC Reference Information Center, Portals II, 445 12th Street, SW., Room CY–A257, Washington, DC 20554. It also may be purchased from the Commission's duplicating contractor at Portals II, 445 12th Street, SW., Room CY–B402, Washington, DC 20554; the contractor's Web site, *http://www.bcpiweb.com*; or by calling (800) 378–3160, facsimile (202) 488–5563, or e-mail *FCC@BCPIWEB.com*. Copies of the public notice also may be obtained via the Commission's Electronic Comment Filing System (ECFS) by entering the docket number, WT Docket No. 05–265. Additionally, the complete item is available on the Federal Communications Commission's Web site at *http://www.fcc.gov*.

Synopsis of the Second Further Notice of Proposed Rulemaking Section of the Order on Reconsideration and Second Further Notice of Proposed Rulemaking

I. Introduction

1. In this Second FNPRM, the Commission seeks additional comment on whether to extend automatic roaming obligations to certain mobile data services—specifically, mobile services, including mobile broadband Internet access, that are provided without interconnection to the public switched telephone network. The Commission is seeking comment as well on whether any such obligations should apply only to service providers that are also CMRS carriers or more broadly to facility-based mobile data service providers whether or not they also provide CMRS. The Commission's underlying policy goals remain the same as for mobile voice service roaming—to facilitate the provision of services in a manner that provides the greatest benefit to consumers. In particular, the Commission seeks to have service provided by new entrants in competition with established incumbents; to ensure that consumers have access to seamless coverage nationwide; and to provide incentives for both new entrants and incumbent service providers to invest and innovate by using available spectrum and constructing wireless network facilities on a widespread basis. The Commission invites parties to include any new information that may be relevant to the Commission's consideration of what action, if any, may be appropriate in this proceeding.

2. In 2007, the Commission sought comment in a *Further Notice (FNPRM)* on whether to impose data roaming obligations on CMRS carriers. The Commission recognizes the need to resolve this issue in an expeditious manner. Broadband deployment is a key priority for the Commission, and the deployment of mobile data networks will be essential to achieve the goal of making broadband connectivity available everywhere in the United States. The Commission also seeks to foster competition and the development of mobile data services with wide, seamless coverage. Wide coverage will enhance the unique social and economic benefits that a mobile service provides by enabling consumers to access information wherever they are, while competition will help to promote investment and innovation and protect consumer interests.

3. Many providers have argued that ensuring the availability of roaming arrangements for mobile broadband will be critical to achieving these goals. The Commission also notes that roaming services have helped to promote competition and seamless nationwide coverage in the mobile telephony market. The Commission notes mobile broadband networks, particularly "fourth-generation" networks, are still at an early stage of deployment, similar to the early years of the mobile telephony market. The Commission therefore expects that the availability of data roaming services will likely play a major role in the future development of the broadband data market. Further, resolving the issue will provide regulatory certainty, which will itself help to establish an environment conducive to network deployment and investment.

4. Nevertheless, the Commission concludes that it is important to refresh and further develop the record before moving to adopt specific rules governing the availability of data roaming services. Mobile broadband is at a critical stage in its development. The mobile broadband ecosystem is rapidly evolving and providers are seeing a rapid increase in mobile broadband data use, but the advanced mobile broadband services market is still nascent. The Commission therefore seeks additional information in order to determine how best to ensure the rapid, ubiquitous and competitive development and deployment of broadband services. Given the impact the Commission's policies can have at this formative stage, the Commission needs to choose the right policies to further its goals for mobile broadband, which like its mobile services goals generally, include fostering innovation, investment and network deployment, promoting competition and the availability of seamless nationwide access, and empowering and protecting consumers.

5. Since the *2007 FNPRM,* there have been numerous developments in the industry and advancements in technology that are likely to be relevant to the Commission's analysis, and which have affected at least one nationwide provider's positions in this proceeding. To help us determine the best policies for mobile broadband, the Commission wants to ensure that such information is fully incorporated into its decision making on this important issue. In addition, in light of the limited extent of the *FNPRM,* the Commission finds that asking a number of specific questions will ensure that its resolution of this issue is based on a more fully developed record. Although the mobile broadband market is similar to the voice market in key respects, it appears to be

different in others, and it is important that the Commission understands whether any of those differences would justify a different regulatory approach to achieve its underlying policy goals than the Commission is taking today with regard to interconnected voice. In addition, as the *FNPRM* was limited to seeking comment on the obligations of CMRS carriers that also provide non-CMRS data services, the Commission takes this opportunity to seek comment on whether to impose similar obligations on other mobile data service providers, whether they offer CMRS or not. For these reasons, the Commission seeks further comment on whether it would be in the public interest to extend roaming obligations to non-interconnected services including broadband data.

A. Discussion

6. The goals that informed the Commission's determinations regarding the scope of roaming obligations for interconnected voice also guide its consideration of obligations on non-interconnected data services. The Commission seeks to foster investment and innovation in the use of spectrum and the development and deployment of data network facilities and services, competition for mobile broadband business by multiple providers, and consumer benefit from the availability of advanced and innovative mobile services with seamless nationwide coverage. The Commission notes that the growth of the mobile broadband data market is at a critical early stage. Many nationwide and non-nationwide providers have obtained licenses, including AWS and 700 MHz spectrum licenses among others, that the Commission anticipates will be used to provide new and advanced data services to American consumers. Numerous commenters in this proceeding argue that the viability of data network deployments and the ability of consumers to access such services seamlessly will depend on the ability of providers to obtain data roaming arrangements.

7. The importance of the issue underscores the need for a more fully developed record to provide the foundation for fact-based, data-driven decision making, especially in light of the brevity of the *2007 FNPRM.* In the two years since the *2007 FNPRM,* the wireless broadband industry has experienced a rapid evolution, with significant economic, technological, and regulatory developments, including developments in network and device technologies, spectrum use and availability, market participants, network deployments, and consumer demand and usage patterns. Such developments include market transactions involving significant existing CMRS providers, the Commission's auction of significant additional spectrum in the 700 MHz Band for commercial broadband use, announcements from numerous providers of new mobile broadband network deployments, increasing consumer use of smartphones, and, partly as a result, a dramatic increase in consumers' use of wireless data services. Given all these changes and developments, the Commission desires an up-to-date understanding of, among other things, the shape of the business segment, the network services and technologies that will be deployed, the importance of roaming to entry and commercial viability, the availability of roaming arrangements absent any regulatory requirement, the technical arrangements needed to support data roaming, and the capacity demands to be expected from data roaming traffic, including variability.

8. In addition, the Commission notes that the *2007 FNPRM* was limited in scope to whether the Commission should impose data roaming obligations on CMRS carriers that also provide non-CMRS data services. As the market for mobile broadband services has developed, however, the Commission now anticipates that mobile broadband services will increasingly be provided by entities that do not offer CMRS but that may nevertheless compete for mobile data service subscribers with companies that offer both mobile broadband and CMRS carriers. Therefore, the Commission is taking this opportunity to seek comment on whether automatic roaming obligations for mobile data services should apply to all providers of such services.

9. Parties should include any new information that may be relevant to determining what action the Commission should take in this proceeding. Further, parties should comment on how a roaming rule for data services, if any, should compare to the Commission's rule for voice services and explain with specificity what justifies similar or different treatment. The Commission notes that parties submitted several proposals in response to the *2007 FNPRM.*

- Some proposed that the Commission should not impose any rule.
- Others argued for a rule for data roaming that largely mirrors the voice roaming rule adopted in the *2007 Report and Order,* subject only to restrictions in cases of technical or economic infeasibility.
- Others proposed requiring data roaming but including special conditions on data roaming comparable to those that the Commission imposed on requests for roaming for push-to-talk and SMS, including a requirement that the requesting provider offer the services on its own network for which it is requesting a roaming arrangement.
- Some suggested that data roaming obligations should only require a host carrier to provide roaming subscribers with conduit access to the requesting carrier's network, not access to the host's own proprietary information services.
- In addition, some commenters proposed specific measures to address concerns regarding the potential for data roaming to cause network capacity exhaustion.

The Commission seeks comment on these specific proposals or any other proposals for addressing data roaming obligations, and the Commission ask all parties to be specific regarding the rule that the Commission should adopt, if any, regarding data roaming. Commenters desiring confidential treatment of their submissions should request that their submission, or specific parts thereof, be withheld from public inspection pursuant to the Commission's rules.

10. *Legal Authority.* The Commission has exercised its discretion to classify some non-interconnected data services, *e.g.,* mobile wireless broadband Internet access, as information services, thus removing them from the category of common carrier services under Title II. In the *2007 Report and Order,* the Commission found that automatic roaming is a common carrier obligation and does not extend to information services or to other wireless services that are not CMRS. Accordingly, in the *2007 FNPRM,* the Commission sought comment on whether automatic roaming obligations could be imposed on such services pursuant to our authority under Title I and/or Title III. The Commission further addresses the extent of its authority below, and the Commission seeks comment on its analysis.

11. Although the Commission determined three years ago that wireless broadband Internet access is an information service and not a CMRS service, it has not made any classification determinations regarding any service or application provided over these Internet access connections. Further, the Commission has not determined whether the provision of automatic roaming should be

considered a telecommunications service, and thus subject to Title II, even if the subscriber is using the roaming arrangement to access an information service. The Commission believes that, regardless of whether the services a subscriber would access through roaming arrangements are telecommunications services or information services, the Commission has statutory authority to require automatic roaming for them. If these services are telecommunications services, they are subject to roaming obligations pursuant to the Commission's authority under Title II and Title III. If they are information services, the Commission has the authority to promulgate roaming requirements under Title III and other provisions. The Commission seeks comment on this analysis, including the significance, if any, of the recent decision of the United States Court of Appeals for the District of Columbia Circuit in *Comcast Corporation.* v. *FCC.*

12. The Commission turns first to its authority under Title III. Several provisions of that title provide the Commission authority to establish license conditions in the public interest. For example, Section 301 provides the Commission with authority to regulate "radio communications" and "transmission of energy by radio." Under Section 303, the Commission has the authority to establish operational obligations for licensees that further the goals and requirements of the Act if the obligations are in the "public convenience, interest, or necessity" and not inconsistent with other provisions of law. Section 303 also authorizes the Commission, subject to what the "public interest, convenience, or necessity requires," to "[p]rescribe the nature of the service to be rendered by each class of licensed stations and each station within any class." Section 307(a) likewise authorizes the issuance of licenses "if public convenience, interest, or necessity will be served thereby." Section 316 provides a similar test for new conditions on existing licenses, authorizing such modifications if "in the judgment of the Commission such action will promote the public interest, convenience, and necessity." Application of these provisions is not affected by whether the service using the spectrum is a telecommunications service or information service under the Act. Thus, in the *Wireless Broadband Internet Access Classification Order,* the Commission found that wireless broadband Internet access, although an information service, continues to be subject to obligations promulgated pursuant to Title III. The Commission also relied on authority under Section 303(r) to impose "open platform" obligations on Upper 700 MHz C Block licensees, without regard to whether such licensees were providing telecommunications or information services. Accordingly, the Commission believes that the provisions discussed above provide authority to establish roaming obligations over both telecommunications and information services, if such obligations are found to be in the public interest and, in the case of Section 303(r), the obligations would also further the goals and requirements of the Act.

13. As discussed above, reasonable roaming obligations can serve the public interest by promoting competition, investment, and new entry while facilitating consumer access to ubiquitous service. The Commission also anticipates that promoting competition, investment, and new entry in the broadband services market and protecting consumer access to nationwide ubiquitous service, would serve several specific goals and requirements of the Act consistent with section 303(r), which gives the Commission authority to impose requirements "as may be necessary to carry out the provisions of this Act." These obligations may help to meet the requirement under Section 309(j)(3) that, "in specifying eligibility and other characteristics of * * * licenses [to be issued by competitive bidding] * * *, and in designing the methodologies for use under this subsection, the Commission shall include safeguards to protect the public interest in the use of the spectrum and shall seek to promote the purposes specified in section 1 of this Act" and certain enumerated objectives. Regarding the purposes in section 1 of the Act, to the extent that they would promote competition and the availability of seamless nationwide services, automatic roaming obligations for data may further the statutory goal of making available "to all the people of the United States * * * a rapid, efficient, Nation-wide, and world-wide wire and radio communication service with adequate facilities at reasonable charges * * * for the purpose of promoting safety of life and property through the use of wire and radio communications." Automatic data roaming additionally may advance enumerated objectives within Section 309(j)(3), including "the development and rapid deployment of new technologies, products, and services for the benefit of the public * * * without administrative or judicial delays; * * * [and] (D) efficient and intensive use of the electromagnetic spectrum * * *." To the extent that roaming requirements are found to encourage more efficient and intensive use of spectrum in rural areas, they would also support the direction of Section 303(g) to "[s]tudy new uses for radio, provide for experimental uses of frequencies, and generally encourage the larger and more effective use of radio in the public interest * * *." These obligations may also further the goal under Section 1302 of encouraging new deployment of advanced services to all Americans by promoting competition and by removing barriers to infrastructure investment, including the barriers to new entrants resulting from incumbents' "head start" advantages. Accordingly, the Commission thinks that, if roaming obligations on non-interconnected services are ultimately found to be in the public interest, the Commission has authority under the provisions of Title III discussed above, among other provisions, to establish such obligations. The Commission seeks comment on this analysis.

14. Next, the Commission seeks comment on arguments in the record that automatic roaming for non-interconnected services is itself a telecommunications service, and therefore is also subject to our authority under Title II. "Telecommunications" is defined in the Act as "the transmission, between or among points specified by the user, of information of the user's choosing without change in the form or content of the information as sent and received." "Telecommunications service" is defined as "the offering of telecommunications for a fee directly to the public, or to such classes of users as to be effectively available directly to the public, regardless of the facilities used." SouthernLINC argues that automatic roaming is simply a transmission service. It describes the function of the host provider as ensuring that data are transmitted without change between the subscriber and the subscriber's home network. Opponents argue that the provision of roaming access to information services can involve direct support of the information service by the host provider rather than simply transmission of the packets to the roaming subscriber's native network. They also argue that, even where the data are simply transmitted back to the native network, this will often require DNS lookup, which, they say, the Commission has found to be a "capability" that goes beyond mere transmission. Proponents respond that such addressing and routing functions

are not sufficient to render automatic roaming an information service, as they do not cause a "change in the form or content of the information as sent and received." The Commission seeks comment on these arguments.

15. The Commission also seeks comment on the extent to which host providers that have implemented data roaming arrangements provide data services or applications, such as web browsing or push-to-device electronic mail, and how these applications are provided. Is a host provider's network being used only as a conduit between the roaming subscriber and the subscriber's home network? To the extent that a host provider performs functions other than data transmission, to what extent are these functions limited to addressing and routing functions, or other functions ancillary to achieving the transmission of the data to its destination? Do any of these functions fall within the management exception in the definition of "information service"? Do the answers to any of these questions vary depending on the specific data service (*e.g.,* e-mail) requested by subscribers of home providers, or on the specific network technology involved (*e.g.,* 2G, 3G, or 4G)?

16. Finally, the Commission turns to its authority under Title I of the Act. Under Title I, the Commission may exercise ancillary authority over a matter when it falls within the agency's general statutory grant of jurisdiction under Title I and the regulation is reasonably ancillary to the effective performance of the Commission's statutorily mandated responsibilities. The Commission seeks comment on its ancillary authority to address roaming obligations for providers of non-interconnected wireless services. The Commission thinks it clear that the Commission has subject matter jurisdiction over non-interconnected wireless services and features, including wireless broadband Internet access services. As the Commission has previously found with regard to wireless broadband Internet access services, wireless non-interconnected services are covered by the Commission's general jurisdictional grant under sections 1 and 2(a) of the Act, coupled with the definition set forth in section 3(33) ("radio communication"). Second, because the availability of automatic roaming at reasonable rates and terms can help to promote facilities-based competition and the availability of seamless nationwide services, automatic roaming obligations may be reasonably ancillary to several provisions under the Act. The Commission seeks comment on whether these or other provisions of the Act support the exercise of ancillary authority.

17. Some commenters argue that relying on our Title I authority to impose roaming obligations on services that the Commission has classified as information services would be inconsistent with Congress's intent that information services not be treated as common carrier services, pointing to section 153(44) of the Act. This provision provides that "a telecommunications carrier shall be treated as a common carrier under this Act only to the extent that it is engaged in providing telecommunications services." They also argue that requiring automatic roaming obligations for information services would be inconsistent with the Commission's prior determination that providers of information services "are exempt from mandatory Title II common carrier regulation." The Commission seeks comment on these arguments.

18. *Importance of Data Roaming.* The Commission next seeks further comment on the importance of roaming for non-interconnected data services. In what ways will data roaming arrangements affect competitive entry and network deployment in the nascent data services market? For example, what is the effect on consumers in the absence of data roaming requirements in terms of the coverage and service they will receive? Will rural consumers, who may only have access to small, local providers, have no coverage beyond their local area?

19. The Commission also seeks comment on what impacts the establishment of data roaming arrangements may have on the terms of retail service provided to consumers, how such impacts differ from those resulting from voice roaming arrangements, and how service terms might be affected by data roaming developments in the future and a data roaming mandate in particular.

20. For those providers that have roaming arrangements with other providers for non-interconnected data services, to what extent do their data subscribers make use of such roaming arrangements, and how does the amount of their subscribers' roaming use compare to their home network use? For host providers, how does the data roaming traffic they support compare to their own subscribers' use, in terms of amount and revenues generated? The Commission also seeks comment on how deployment, competition, and consumer access to services will be affected in the mobile broadband market in the absence of data roaming obligations.

21. *Investment Incentives.* The Commission seeks further comment on the impact that extending roaming requirements to wireless data services would have on the incentives of providers to invest in advanced data networks and fully use available spectrum. The record currently encompasses competing claims with regard to the impact that extending an automatic roaming obligation to non-interconnected services would have on investment. Proponents of a data roaming obligation argue that, because the availability of roaming will facilitate competitive entry, the amount of network investment will be increased. Opponents of such an obligation argue that a data roaming mandate will create disincentives for both smaller and larger providers to build out advanced networks in new areas, particularly in high cost areas.

22. The Commission first notes that these arguments are similar to the arguments presented to the Commission with regard to automatic roaming for voice services, which, as discussed above, the Commission has addressed through adoption of an automatic roaming requirement. The Commission therefore asks commenters to address specifically whether and how the investment incentives would differ for non-interconnected data services. The Commission also notes that, while many commenters made assertions regarding the impact of roaming obligations on buildout incentives, no commenters provided a methodology or hard data that would help us to judge the overall impact of a roaming obligation on investment, the use of spectrum, and buildout. Such methodology or data would be helpful. In addition, the Commission seeks comment on whether it should adopt any measures or restrictions to help preserve investment incentives. For example, should the Commission clarify that a carrier that obtains automatic roaming from another carrier does not have a right to advertise that it offers its subscribers roaming on a particular host carrier's network absent a voluntary agreement of the host carrier? Would this help to prevent freeriding on the value of the host carrier's brand name recognition and service quality reputation?

23. *The Provision of Roaming for Non-Interconnected Data Services.* The Commission also asks commenters to provide specific data that will help us assess the availability of roaming arrangements for various non-interconnected data services and the current ability of providers that desire

such arrangements to obtain them. The Commission seeks comment on the impact of consolidation in the CMRS market or other trends affecting market concentration on the current and future availability of roaming arrangements for non-interconnected services. For example, the Commission asks commenters to provide specific information regarding instances in which providers that have been willing to enter into roaming arrangements, whether for voice or data, are now refusing to do so. In such cases, the Commission asks commenters to specify whether the would-be host provider has refused ongoing roaming for any service, or has agreed to continue providing roaming for services previously supported but refused to extend the arrangement to new (*e.g.,* non-interconnected data) services.

24. The Commission seeks specific information from providers that have received requests for data roaming regarding their policies and practices regarding such roaming arrangements. How many requests for data roaming they have received, how many of these requesting providers have been granted or refused roaming arrangements, and for what reasons or considerations were arrangements granted or refused? Will these policies change in the future?

25. The Commission seeks comment on the impact of developing network technology on the availability of data roaming. Are providers seeking data roaming arrangements limited to networks using the same basic air interface technology as their own, and, if so, how do the markets for roaming services compare between the different network technologies? How are roaming opportunities being affected by the handsets being developed for broadband data? For example, to what extent are multi-mode or multi-band handsets being developed that might expand a provider's potential pool of roaming partners?

26. *Capacity and Other Technical Issues.* In the *FNPRM,* the Commission sought comment on whether roaming obligations presented any issues regarding network capacity, integrity, or security, and on the effect that automatic roaming would have on the capacity of data networks and the ability of providers to offer full access to their own customers. The Commission asked whether a provider should have the right to limit access to its network by roamers and what parameters should be considered as justification for such limits. Numerous commenters addressed these issues in general terms, but provided few specifics.

27. The Commission invites commenters to refresh the record on these issues and provide specific information. The Commission seeks comment on how concerns regarding capacity or traffic management issues from data roaming traffic could be addressed. Would clarifying that a host provider's provision of data roaming service is subject to reasonable network operational needs address this issue? The Commission asks commenters to be specific regarding the clarifications, if any, that the Commissions should adopt. If a commenter asserts that addressing this problem through traffic management is not feasible, the Commission asks that the commenter provide a detailed explanation regarding the problem. Some commenters have argued, for example, that it is not possible to identify the particular roaming individuals causing a traffic congestion problem. The Commission seeks comment on the specifics of this argument, and on, assuming the argument is true, alternative traffic management approaches that are available to address network congestion issues. For instance, as suggested by some proponents of a data roaming obligation, should such a roaming obligation allow network operators to identify roaming users as a group and apply suitable network management protocols to such a group to address congestion issues? The Commission also notes that it is seeking comment below on terms and conditions established for the provision of PTT and SMS roaming that may well serve to limit technical issues.

28. The Commission also seeks specific information on the extent to which solutions have been developed to address these issues. The Commission notes, for example, that some international data roaming services have implemented models to provide traffic forecasting. Can these models help providers address the problem of uncertainty in the broadband capacity demands of roaming traffic? Have such models for data roaming been implemented domestically? Data roaming arrangements are already established in the United States that provide roaming on 2.5G data networks. The Commission seeks comment on how the capacity demands of roaming parties and the other technical issues referenced above have been addressed to achieve roaming on these networks. For example, how have providers addressed the concerns regarding traffic management and capacity exhaustion?

29. The Commission also seeks comment on what other actions might be appropriate to address spectrum capacity needs that may arise out of data roaming or to help ensure that spectrum is utilized to the extent possible. For example, would a rule facilitating spectrum sharing arrangements between a host provider and a requesting provider be helpful or appropriate if the host provider provides data roaming services to the requesting provider? In other words, would it be helpful to obligate the requesting provider to allow the host provider to use the requesting provider's spectrum in the market in which the host provider makes data roaming available to the requesting provider?

30. To what extent have solutions been developed for anticipating and managing the broadband capacity demands of roaming traffic on networks using any 3G technology and on networks using any 4G technology? If solutions have been developed for any technology, the Commission seeks comment on the status of efforts to develop such solutions. Are there different technical, legal, commercial or policy considerations that the Commission should consider with respect to data roaming traffic on 3G and 4G networks? For instance, how do 4G technologies such as LTE impact the technical challenges to developing such roaming arrangements or otherwise affect carriers' ability to establish such arrangements? If there are differences, should the Commission treat roaming on 4G networks differently than other generations of mobile networks, including 3G networks? If so, for what period of time should the different treatment remain in place? Is facilitating automatic roaming traffic between different generations of networks, including 3G and 4G networks important and, if so, are there technical, legal, commercial or policy considerations of which the Commission should be aware? The Commission understands that a number of 3G roaming arrangements have been made between domestic and foreign carriers to support international roaming at home and abroad. The Commission seeks comment on the extent to which carriers have established data roaming arrangements with foreign carriers, whether international roaming solutions could be applied to domestic roaming.

31. *Scope of Covered Entities.* Assuming that the Commission were to impose a data roaming obligation, the Commission seeks comment on the appropriate scope and terms of the obligation (including those entities entitled to request data roaming), whether either the scope or the terms of the obligation should vary from what

the Commission has established for interconnected services, and in particular, whether the scope of entities covered by the obligations should include providers of mobile data services that do not also offer CMRS. The obligation to provide roaming for interconnected services applies only to providers that also offer CMRS, and only those that meet certain characteristics. Although mobile broadband data services may be provided by companies that are also CMRS carriers, such services may also be provided by entities that do not offer any CMRS. Therefore, the Commission seeks comment on whether the scope of covered entities should be broader than the existing scope of the automatic roaming rule. If so, how specifically should the Commission define the class of covered entities? For example, should the Commission impose the same obligations on all entities offering facility-based commercial mobile data services? Should it encompass only entities operating over licensed spectrum or include providers that rely on the use of unlicensed devices as well? Should the class of covered entities be limited to terrestrial networks, or also encompass satellite providers of mobile data services (either by satellite or ancillary terrestrial component)? The Commission seeks comment on how, specifically, the Commission should define entities covered by any automatic data roaming rule.

32. The Commission seeks comment on whether there are any subsets of non-interconnected data services to which roaming requirements should not apply. For example, should the Commission propose that any automatic roaming obligation on data service providers exclude non-facilities-based entities such as resellers? The Commission also notes that the automatic roaming obligation for interconnected services is restricted to such providers as are in actual competition for the provision of such services. Given that promoting competition would likewise be a key reason to establish roaming obligations on non-interconnected services, is there a comparable restriction the Commission should impose on the scope of such obligation to achieve the same purpose?

33. *Other Terms and Conditions.* The Commission also seeks comment on what specific terms, conditions, or restrictions the Commission should include in any rule requiring the provision of data roaming. For example, what conditions could the Commission adopt to help ensure that providers' incentives to innovate and invest are not undermined? The Commission previously sought comment on whether the potential adverse effect on incentives might be mitigated by conditioning roaming access to non-interconnected services in the same manner as the Commission has with push-to-talk and SMS: requiring that (1) the requesting provider provide the underlying service for which roaming is requested, (2) roaming be technically feasible, and (3) any changes to the host network necessary to accommodate roaming access to the requested service be economically reasonable. The Commission again seeks comment on whether these conditions, or some variation, should be adopted.

34. Leap supports imposing the first condition above on data roaming, arguing that this would "remove any question of free-riding on the innovation of others" and "would leave ample room for product differentiation" because a provider that developed proprietary enhanced services or applications would not have to provide them to roaming subscribers. Verizon Wireless and MetroPCS raise concerns, however. Verizon Wireless argues that the proposal requires too little: under this proposal, it asserts, a provider that makes a minimal investment to support a data service on a "handful of EVDO antennas" in its home market would be able to obtain data services on a competitor's nationwide network. MetroPCS argues, however, that it requires too much: requiring the requesting provider to offer the requested data service on its own home network would be "impracticable and would foster unnecessary litigation." It further argues that there were many legitimate reasons why a provider might not offer a particular service in one or more of its home markets, including variations in the spectrum resources available to the provider.

35. The Commission continues to believe that these conditions lay a solid foundation for any roaming requirement. On the one hand, as with the Commission's automatic voice roaming requirement, a data roaming requirement is not intended to constitute a resale requirement. The Commission would decide in the case of a specific dispute whether data roaming should be provided in a particular instance, and on what terms, or whether the request is essentially a request for resale. On the other hand, requiring a provider to offer a data service on its home network would appear to be an essential element of a request for roaming coverage as opposed to resale. To the extent that the lack of a roaming arrangement may make competitive entry in the mobile services market difficult for small providers, would it be useful to clarify that providers that do not offer data services may obtain roaming arrangements that become effective when they offer their own data services?

36. With regard to the second and third conditions, and the extent to which they require changes to the network, the Commission seeks further comment on whether these conditions will address concerns regarding the potential technical issues that may arise when implementing data roaming arrangements. The Commission seeks comment on whether the Commission should clarify that to the extent requesting providers can resolve issues of accommodation through changes to their own network, a reasonable request must include an offer to make such changes.

37. *Dispute Resolution.* The Commission seeks comment on the appropriate process for dispute resolution, and whether the Commission should provide the same process for data roaming requests as for other roaming requests. The Commission also seeks comment on whether it should adopt measures to require or encourage disputes over the reasonableness of requests for data roaming to be resolved through alternative dispute resolution procedures such as arbitration. Are there any legal considerations, limitations or concerns for the Commission to consider with respect to adoption of alternative disputes resolution procedures? If such measures are appropriate for data roaming disputes, should they be applicable to roaming disputes more generally?

II. Procedural Matters

A. Initial Regulatory Flexibility Analysis

38. As required by the Regulatory Flexibility Act of 1980 ("RFA"), the Commission has prepared an Initial Regulatory Flexibility Analysis ("IRFA") relating to the *Second Further Notice of Proposed Rulemaking,* The IRFA is set forth below.

Initial Regulatory Flexibility Analysis

39. As required by the Regulatory Flexibility Act of 1980, as amended (the "RFA"), the Commission has prepared this Initial Regulatory Flexibility Analysis (IRFA) of the possible significant economic impact of the policies and rules proposed in the Second Further Notice of Proposed Rulemaking ("*Second FNPRM*") on a substantial number of small entities. Written public comments are requested

on the IRFA. Comments must be identified as responses to the IRFA and must be filed by the deadline for comments on the *Second FNPRM* provided in the item. The Commission will send a copy of the *Second FNPRM,* including this IRFA, to the Chief Counsel for Advocacy of the Small Business Administration ("SBA"). In addition, the *Second FNPRM* and IRFA (or summaries thereof) will be published in the **Federal Register.**

A. Need for, and Objectives of, the Proposed Rules

40. In the *Second FNPRM,* the Commission invites interested parties to refresh the record pertaining to the *2007 Roaming FNPRM.* Since the *2007 Roaming FNPRM,* there have been advancements in technology and developments in the industry that may have affected parties' positions on the issues raised in the *FNPRM.* Accordingly, the Commission requests that parties refresh the record in this proceeding to reflect the effects of these developments. The Commission asks parties to include any new information that may be relevant to the Commission's consideration of what action, if any, may be appropriate in this proceeding. In addition, as the previous *FNPRM* was limited to seeking comment on the obligations of CMRS carriers that also provide non-CMRS data services, the Commission takes this opportunity to seek comment on whether to impose similar obligations on other mobile data service providers, whether they offer CMRS or not. For these reasons, the Commission seeks further comment on whether it would be in the public interest to extend roaming obligations to non-interconnected services, including broadband data.

B. Legal Basis

41. The authority for the actions taken in this *Second FNPRM* is contained in Sections 1, 4(i), 201, 202, 251(a), 253, 303(r), and 332(c)(1)(B) of the Communications Act of 1934, as amended, 47 U.S.C. 151, 154(i), 201, 202, 251(a), 253, 303(r), and 332(c)(1)(B).

C. Description and Estimate of the Number of Small Entities to Which the Proposed Rules Will Apply

42. The RFA directs agencies to provide a description of, and, where feasible, an estimate of, the number of small entities that may be affected by the proposed rules, if adopted. The RFA generally defines the term "small entity" as having the same meaning as the terms "small business," "small organization," and "small governmental jurisdiction." In addition, the term "small business" has the same meaning as the term "small business concern" under the Small Business Act. A "small business concern" is one which: (1) Is independently owned and operated; (2) is not dominant in its field of operation; and (3) satisfies any additional criteria established by the Small Business Administration (SBA).

43. In the following paragraphs, the Commission further describes and estimates the number of small entity licensees that may be affected by the rules the Commission proposes in this *Second FNPRM.* The Commission's extension of the automatic roaming obligation to non-interconnected services and features, including those that constitute information services, affects any CMRS carrier offering such services.

44. This IRFA analyzes the number of small entities affected on a service-by-service basis. When identifying small entities that could be affected by the Commission's new rules, this IRFA provides information that describes auction results, including the number of small entities that were winning bidders. However, the number of winning bidders that qualify as small businesses at the close of an auction does not necessarily reflect the total number of small entities currently in a particular service. The Commission does not generally require that licensees later provide business size information, except in the context of an assignment or a transfer of control application that involves unjust enrichment issues.

45. *Wireless Telecommunications Carriers (except Satellite).* Since 2007, the Census Bureau has placed wireless firms within this new, broad, economic census category. Prior to that time, such firms were within the now-superseded categories of "Paging" and "Cellular and Other Wireless Telecommunications." Under the present and prior categories, the SBA has deemed a wireless business to be small if it has 1,500 or fewer employees. Because Census Bureau data are not yet available for the new category, the Commission will estimate small business prevalence using the prior categories and associated data. For the category of Paging, data for 2002 show that there were 807 firms that operated for the entire year. Of this total, 804 firms had employment of 999 or fewer employees, and three firms had employment of 1,000 employees or more. For the category of Cellular and Other Wireless Telecommunications, data for 2002 show that there were 1,397 firms that operated for the entire year. Of this total, 1,378 firms had employment of 999 or fewer employees, and 19 firms had employment of 1,000 employees or more. Thus, the Commission estimates that the majority of wireless firms are small.

46. *Wireless Service Providers.* The SBA has developed a small business size standard for wireless firms within the two broad economic census categories of "Paging" and "Cellular and Other Wireless Telecommunications." Under both categories, the SBA deems a wireless business to be small if it has 1,500 or fewer employees. For the census category of Paging, Census Bureau data for 2002 show that there were 807 firms in this category that operated for the entire year. Of this total, 804 firms had employment of 999 or fewer employees, and three firms had employment of 1,000 employees or more. Thus, under this category and associated small business size standard, the majority of firms can be considered small. For the census category of Cellular and Other Wireless Telecommunications, Census Bureau data for 2002 show that there were 1,397 firms in this category that operated for the entire year. Of this total, 1,378 firms had employment of 999 or fewer employees, and 19 firms had employment of 1,000 employees or more. Thus, under this second category and size standard, the majority of firms can, again, be considered small.

47. *Cellular Licensees.* The SBA has developed a small business size standard for small businesses in the category "Cellular and Other Wireless Telecommunications." Under that SBA category, a business is small if it has 1,500 or fewer employees. For the census category of "Cellular and Other Wireless Telecommunications," Census Bureau data for 2002 show that there were 1,397 firms in this category that operated for the entire year. Of this total, 1,378 firms had employment of 999 or fewer employees, and 19 firms had employment of 1,000 employees or more. Thus, under this category and size standard, the majority of firms can be considered small.

48. *Broadband Personal Communications Service.* The broadband Personal Communications Service (PCS) spectrum is divided into six frequency blocks designated A through F, and the Commission has held auctions for each block. The Commission has created a small business size standard for Blocks C and F as an entity that has average gross revenues of less than $40 million in the three previous calendar years. For Block F, an additional small business size standard for "very small business" was added and is defined as an entity that, together with its affiliates, has average

gross revenues of not more than $15 million for the preceding three calendar years. These small business size standards, in the context of broadband PCS auctions, have been approved by the SBA. No small businesses within the SBA-approved small business size standards bid successfully for licenses in Blocks A and B. There were 90 winning bidders that qualified as small entities in the C Block auctions. A total of 93 "small" and "very small" business bidders won approximately 40 percent of the 1,479 licenses for Blocks D, E, and F. In 1999, the Commission reauctioned 155 C, D, E, and F Block licenses; there were 113 small business winning bidders.

49. In 2001, the Commission completed the auction of 422 C and F Broadband PCS licenses in Auction 35. Of the 35 winning bidders in this auction, 29 qualified as "small" or "very small" businesses. Subsequent events concerning Auction 35, including judicial and agency determinations, resulted in a total of 163 C and F Block licenses being available for grant. In 2005, the Commission completed an auction of 188 C block licenses and 21 F block licenses in Auction 58. There were 24 winning bidders for 217 licenses. Of the 24 winning bidders, 16 claimed small business status and won 156 licenses. In 2007, the Commission completed an auction of 33 licenses in the A, C, and F Blocks in Auction 71. Of the 14 winning bidders, six were designated entities. In 2008, the Commission completed an auction of 20 Broadband PCS licenses in the C, D, E and F block licenses in Auction 78.

50. *Narrowband Personal Communications Service.* In 1994, the Commission conducted an auction for Narrowband PCS licenses. A second auction was also conducted later in 1994. For purposes of the first two Narrowband PCS auctions, "small businesses" were entities with average gross revenues for the prior three calendar years of $40 million or less. Through these auctions, the Commission awarded a total of 41 licenses, 11 of which were obtained by four small businesses. To ensure meaningful participation by small business entities in future auctions, the Commission adopted a two-tiered small business size standard in the Narrowband PCS Second Report and Order. A "small business" is an entity that, together with affiliates and controlling interests, has average gross revenues for the three preceding years of not more than $40 million. A "very small business" is an entity that, together with affiliates and controlling interests, has average gross revenues for the three preceding years of not more than $15 million. The SBA has approved these small business size standards. A third auction was conducted in 2001. Here, five bidders won 317 (Metropolitan Trading Areas and nationwide) licenses. Three of these claimed status as a small or very small entity and won 311 licenses.

51. *Specialized Mobile Radio.* The Commission awards "small entity" bidding credits in auctions for Specialized Mobile Radio (SMR) geographic area licenses in the 800 MHz and 900 MHz bands to firms that had revenues of no more than $15 million in each of the three previous calendar years. The Commission awards "very small entity" bidding credits to firms that had revenues of no more than $3 million in each of the three previous calendar years. The SBA has approved these small business size standards for the 900 MHz Service. The Commission has held auctions for geographic area licenses in the 800 MHz and 900 MHz bands. The 900 MHz SMR was completed in 1996. Sixty bidders claiming that they qualified as small businesses under the $15 million size standard won 263 geographic area licenses in the 900 MHz SMR band. The 800 MHz SMR auction for the upper 200 channels was conducted in 1997. Ten bidders claiming that they qualified as small businesses under the $15 million size standard won 38 geographic area licenses for the upper 200 channels in the 800 MHz SMR band. A second auction for the 800 MHz band was conducted in 2002 and included 23 BEA licenses. One bidder claiming small business status won five licenses.

52. The auction of the 1,050 800 MHz SMR geographic area licenses for the General Category channels was conducted in 2000. Eleven bidders won 108 geographic area licenses for the General Category channels in the 800 MHz SMR band qualified as small businesses under the $15 million size standard. In an auction completed in 2000, a total of 2,800 Economic Area licenses in the lower 80 channels of the 800 MHz SMR service were awarded. Of the 22 winning bidders, 19 claimed "small business" status and won 129 licenses. Thus, combining all three auctions, 40 winning bidders for geographic licenses in the 800 MHz SMR band claimed status as small businesses.

53. In addition, there are numerous incumbent site-by-site SMR licensees and licensees with extended implementation authorizations in the 800 and 900 MHz bands. The Commission does not know how many firms provide 800 MHz or 900 MHz geographic area SMR pursuant to extended implementation authorizations, nor how many of these providers have annual revenues of no more than $15 million. One firm has over $15 million in revenues. In addition, the Commission does not know how many of these firms have 1500 or fewer employees. The Commission assumes, for purposes of this analysis, that all of the remaining existing extended implementation authorizations are held by small entities, as that small business size standard is approved by the SBA.

54. *AWS Services (1710–1755 MHz and 2110–2155 MHz bands (AWS–1); 1915–1920 MHz, 1995–2000 MHz, 2020–2025 MHz and 2175–2180 MHz bands (AWS–2); 2155–2175 MHz band (AWS–3)).* For the AWS–1 bands, the Commission has defined a "small business" as an entity with average annual gross revenues for the preceding three years not exceeding $40 million, and a "very small business" as an entity with average annual gross revenues for the preceding three years not exceeding $15 million. For AWS–2 and AWS–3, although the Commission does not know for certain which entities are likely to apply for these frequencies, the Commission notes that the AWS–1 bands are comparable to those used for cellular service and personal communications service. The Commission has not yet adopted size standards for the AWS–2 or AWS–3 bands but proposes to treat both AWS–2 and AWS–3 similarly to broadband PCS service and AWS–1 service due to the comparable capital requirements and other factors, such as issues involved in relocating incumbents and developing markets, technologies, and services.

55. *Rural Radiotelephone Service.* The Commission has not adopted a size standard for small businesses specific to the Rural Radiotelephone Service. A significant subset of the Rural Radiotelephone Service is the Basic Exchange Telephone Radio System ("BETRS"). In the present context, the Commission will use the SBA's small business size standard applicable to Wireless Telecommunications Carriers (except Satellite), *i.e.,* an entity employing no more than 1,500 persons. There are approximately 1,000 licensees in the Rural Radiotelephone Service, and the Commission estimates that there are 1,000 or fewer small entity licensees in the Rural Radiotelephone Service that may be affected by the rules and policies adopted herein.

56. *Wireless Communications Services.* This service can be used for fixed, mobile, radiolocation, and digital

audio broadcasting satellite uses in the 2305–2320 MHz and 2345–2360 MHz bands. The Commission defined "small business" for the wireless communications services (WCS) auction as an entity with average gross revenues of $40 million for each of the three preceding years, and a "very small business" as an entity with average gross revenues of $15 million for each of the three preceding years. The SBA has approved these definitions. The Commission auctioned geographic area licenses in the WCS service. In the auction, which commenced on April 15, 1997 and closed on April 25, 1997, there were seven bidders that won 31 licenses that qualified as very small business entities, and one bidder that won one license that qualified as a small business entity.

57. *220 MHz Radio Service—Phase I Licensees.* The 220 MHz service has both Phase I and Phase II licenses. Phase I licensing was conducted by lotteries in 1992 and 1993. There are approximately 1,515 such non-nationwide licensees and four nationwide licensees currently authorized to operate in the 220 MHz Band. The Commission has not developed a definition of small entities specifically applicable to such incumbent 220 MHz Phase I licensees. To estimate the number of such licensees that are small businesses, the Commission applies the small business size standard under the SBA rules applicable to Wireless Telecommunications Carriers (except Satellite). This category provides that a small business is a wireless company employing no more than 1,500 persons. The Commission estimates that most such licensees are small businesses under the SBA's small business standard.

58. *220 MHz Radio Service—Phase II Licensees.* The 220 MHz service has both Phase I and Phase II licenses. The Phase II 220 MHz service is a new service, and is subject to spectrum auctions. In the *220 MHz Third Report and Order,* the Commission adopted a small business size standard for defining "small" and "very small" businesses for purposes of determining their eligibility for special provisions such as bidding credits and installment payments. This small business standard indicates that a "small business" is an entity that, together with its affiliates and controlling principals, has average gross revenues not exceeding $15 million for the preceding three years. A "very small business" is defined as an entity that, together with its affiliates and controlling principals, has average gross revenues that do not exceed $3 million for the preceding three years. The SBA has approved these small size standards. Auctions of Phase II licenses commenced on and closed in 1998. In the first auction, 908 licenses were auctioned in three different-sized geographic areas: three nationwide licenses, 30 Regional Economic Area Group (EAG) Licenses, and 875 Economic Area (EA) Licenses. Of the 908 licenses auctioned, 693 were sold. Thirty-nine small businesses won 373 licenses in the first 220 MHz auction. A second auction included 225 licenses: 216 EA licenses and 9 EAG licenses. Fourteen companies claiming small business status won 158 licenses. A third auction included four licenses: 2 BEA licenses and 2 EAG licenses in the 220 MHz Service. No small or very small business won any of these licenses. In 2007, the Commission conducted a fourth auction of the 220 MHz licenses. Bidding credits were offered to small businesses. A bidder with attributed average annual gross revenues that exceeded $3 million and did not exceed $15 million for the preceding three years ("small business") received a 25 percent discount on its winning bid. A bidder with attributed average annual gross revenues that did not exceed $3 million for the preceding three years received a 35 percent discount on its winning bid ("very small business"). Auction 72, which offered 94 Phase II 220 MHz Service licenses, concluded in 2007. In this auction, five winning bidders won a total of 76 licenses. Two winning bidders identified themselves as very small businesses won 56 of the 76 licenses. One of the winning bidders that identified themselves as a small business won 5 of the 76 licenses won.

59. *700 MHz Guard Band Licenses.* In the *700 MHz Guard Band Order,* the Commission adopted size standards for "small businesses" and "very small businesses" for purposes of determining their eligibility for special provisions such as bidding credits and installment payments. A small business in this service is an entity that, together with its affiliates and controlling principals, has average gross revenues not exceeding $40 million for the preceding three years. Additionally, a "very small business" is an entity that, together with its affiliates and controlling principals, has average gross revenues that are not more than $15 million for the preceding three years. SBA approval of these definitions is not required. In 2000, the Commission conducted an auction of 52 Major Economic Area ("MEA") licenses. Of the 104 licenses auctioned, 96 licenses were sold to nine bidders. Five of these bidders were small businesses that won a total of 26 licenses. A second auction of 700 MHz Guard Band licenses commenced and closed in 2001. All eight of the licenses auctioned were sold to three bidders. One of these bidders was a small business that won a total of two licenses.

60. *Upper 700 MHz Band Licenses.* In the *700 MHz Second Report and Order,* the Commission revised its rules regarding Upper 700 MHz licenses. On January 24, 2008, the Commission commenced Auction 73 in which several licenses in the Upper 700 MHz band were available for licensing: 12 Regional Economic Area Grouping licenses in the C Block, and one nationwide license in the D Block. The auction concluded on March 18, 2008, with 3 winning bidders claiming very small business status (those with attributable average annual gross revenues that do not exceed $15 million for the preceding three years) and winning five licenses.

61. *Lower 700 MHz Band Licenses.* The Commission adopted criteria for defining three groups of small businesses for purposes of determining their eligibility for special provisions such as bidding credits. The Commission has defined a small business as an entity that, together with its affiliates and controlling principals, has average gross revenues not exceeding $40 million for the preceding three years. A very small business is defined as an entity that, together with its affiliates and controlling principals, has average gross revenues that are not more than $15 million for the preceding three years. Additionally, the Lower 700 MHz Band has a third category of small business status that may be claimed for Metropolitan/Rural Service Area (MSA/RSA) licenses. The third category is entrepreneur, which is defined as an entity that, together with its affiliates and controlling principals, has average gross revenues that are not more than $3 million for the preceding three years. The SBA has approved these small size standards. An auction of 740 licenses (one license in each of the 734 MSAs/RSAs and one license in each of the six Economic Area Groupings (EAGs)) commenced on August 27, 2002, and closed on September 18, 2002. Of the 740 licenses available for auction, 484 licenses were sold to 102 winning bidders. Seventy-two of the winning bidders claimed small business, very small business or entrepreneur status and won a total of 329 licenses. A second auction commenced on May 28, 2003, and closed on June 13, 2003, and included 256 licenses: 5 EAG licenses and 476 CMA licenses. Seventeen winning bidders claimed small or very

small business status and won sixty licenses, and nine winning bidders claimed entrepreneur status and won 154 licenses.

62. *Wireless Telephony.* Wireless telephony includes cellular, personal communications services (PCS), and specialized mobile radio (SMR) telephony carriers. As noted, the SBA has developed a small business size standard for Wireless Telecommunications Carriers (except Satellite). Under that SBA small business size standard, a business is small if it has 1,500 or fewer employees. According to *Trends in Telephone Service* data, 434 carriers reported that they were engaged in wireless telephony. Of these, an estimated 222 have 1,500 or fewer employees and 212 have more than 1,500 employees. The Commission has estimated that 222 of these are small under the SBA small business size standard.

63. *Air-Ground Radiotelephone Service.* The Commission has previously used the SBA's small business definition applicable to Wireless Telecommunications Carriers (except Satellite), *i.e.,* an entity employing no more than 1,500 persons. There are approximately 100 licensees in the Air-Ground Radiotelephone Service, and under that definition, the Commission estimates that almost all of them qualify as small entities under the SBA definition. For purposes of assigning Air-Ground Radiotelephone Service licenses through competitive bidding, the Commission has defined "small business" as an entity that, together with controlling interests and affiliates, has average annual gross revenues for the preceding three years not exceeding $40 million. A "very small business" is defined as an entity that, together with controlling interests and affiliates, has average annual gross revenues for the preceding three years not exceeding $15 million. These definitions were approved by the SBA. In 2006, the Commission completed an auction of nationwide commercial Air-Ground Radiotelephone Service licenses in the 800 MHz band (Auction 65). Later in 2006, the auction closed with two winning bidders winning two Air-Ground Radiotelephone Services licenses. Neither of the winning bidders claimed small business status.

64. *Aviation and Marine Radio Services.* There are approximately 26,162 aviation, 34,555 marine (ship), and 3,296 marine (coast) licensees. The Commission has not developed a small business size standard specifically applicable to all licensees. For purposes of this analysis, the Commission will use the SBA small business size standard for the category Wireless Telecommunications Carriers (except Satellite), which is 1,500 or fewer employees. The Commission is unable to determine how many of those licensed fall under this standard. For purposes of the Commission's evaluations in this analysis, the Commission estimates that there are up to approximately 62,969 licensees that are small businesses under the SBA standard. In 1998, the Commission held an auction of 42 VHF Public Coast licenses in the 157.1875–157.4500 MHz (ship transmit) and 161.775–162.0125 MHz (coast transmit) bands. For this auction, the Commission defined a "small" business as an entity that, together with controlling interests and affiliates, has average gross revenues for the preceding three years not to exceed $15 million. In addition, a "very small" business is one that, together with controlling interests and affiliates, has average gross revenues for the preceding three years not to exceed $3 million. Further, the Commission made available Automated Maritime Telecommunications System ("AMTS") licenses in Auctions 57 and 61. Winning bidders could claim status as a very small business or a very small business. A very small business for this service is defined as an entity with attributed average annual gross revenues that do not exceed $3 million for the preceding three years, and a small business is defined as an entity with attributed average annual gross revenues of more than $3 million but less than $15 million for the preceding three years. Three of the winning bidders in Auction 57 qualified as small or very small businesses, while three winning entities in Auction 61 qualified as very small businesses.

65. *Fixed Microwave Services.* Fixed microwave services include common carrier, private-operational fixed, and broadcast auxiliary radio services. At present, there are approximately 22,015 common carrier fixed licensees and 61,670 private operational-fixed licensees and broadcast auxiliary radio licensees in the microwave services. The Commission has not created a size standard for a small business specifically with respect to fixed microwave services. For purposes of this analysis, the Commission uses the SBA small business size standard for the category Wireless Telecommunications Carriers (except Satellite), which is 1,500 or fewer employees. The Commission does not have data specifying the number of these licensees that have no more than 1,500 employees, and thus are unable at this time to estimate with greater precision the number of fixed microwave service licensees that would qualify as small business concerns under the SBA's small business size standard. Consequently, the Commission estimates that there are 22,015 or fewer common carrier fixed licensees and 61,670 or fewer private operational-fixed licensees and broadcast auxiliary radio licensees in the microwave services that may be small and may be affected by the rules and policies proposed herein. The Commission notes, however, that the common carrier microwave fixed licensee category includes some large entities.

66. *Local Multipoint Distribution Service.* Local Multipoint Distribution Service (LMDS) is a fixed broadband point-to-multipoint microwave service that provides for two-way video telecommunications. The auction of the 986 LMDS licenses began and closed in 1998. The Commission established a small business size standard for LMDS licenses as an entity that has average gross revenues of less than $40 million in the three previous calendar years. An additional small business size standard for "very small business" was added as an entity that, together with its affiliates, has average gross revenues of not more than $15 million for the preceding three calendar years. The SBA has approved these small business size standards in the context of LMDS auctions. There were 93 winning bidders that qualified as small entities in the LMDS auctions. A total of 93 small and very small business bidders won approximately 277 A Block licenses and 387 B Block licenses. In 1999, the Commission re-auctioned 161 licenses; were 32 small and very small businesses winning that won 119 licenses.

67. *Offshore Radiotelephone Service.* This service operates on several ultra high frequencies ("UHF") television broadcast channels that are not used for television broadcasting in the coastal areas of states bordering the Gulf of Mexico. There is presently one licensee in this service. The Commission does not have information whether that licensee would qualify as small under the SBA's small business size standard for Wireless Telecommunications Carriers (except Satellite) services. Under that SBA small business size standard, a business is small if it has 1,500 or fewer employees.

68. *39 GHz Service.* The Commission created a special small business size standard for 39 GHz licenses—an entity that has average gross revenues of $40 million or less in the three previous calendar years. An additional size standard for "very small business" is: An

entity that, together with affiliates, has average gross revenues of not more than $15 million for the preceding three calendar years. The SBA has approved these small business size standards. The auction of the 2,173 39 GHz licenses began and closed in 2000. The 18 bidders who claimed small business status won 849 licenses.

69. *218–219 MHz Service.* The first auction of 218–219 MHz spectrum resulted in 178 entities winning licenses for 594 Metropolitan Statistical Area (“MSAs”). Of the 594 licenses, 557 were won by entities qualifying as a small business. For that auction, the small business size standard was an entity that, together with its affiliates, has no more than a $6 million net worth and, after Federal income taxes (excluding any carry over losses), has no more than $2 million in annual profits each year for the previous two years. In the *218–219 MHz Report and Order and Memorandum Opinion and Order,* the Commission defined a small business as an entity that, together with its affiliates and persons or entities that hold interests in such an entity and their affiliates, has average annual gross revenues not exceeding $15 million for the preceding three years. A very small business is defined as an entity that, together with its affiliates and persons or entities that hold interests in such an entity and its affiliates, has average annual gross revenues not exceeding $3 million for the preceding three years. The SBA has approved of these definitions. A subsequent auction is not yet scheduled. Given the success of small businesses in the previous auction, and the prevalence of small businesses in the subscription television services and message communications industries, the Commission assumes for purposes of this analysis that in future auctions, many, and perhaps most, of the licenses may be awarded to small businesses.

70. *Incumbent 24 GHz Licensees.* This analysis may affect incumbent licensees who were relocated to the 24 GHz band from the 18 GHz band, and applicants who wish to provide services in the 24 GHz band. The applicable SBA small business size standard is that of Wireless Telecommunications Carriers (except Satellite). This category provides that such a company is small if it employs no more than 1,500 persons. The broader census data notwithstanding, the Commission believes that there are only two licensees in the 24 GHz band that were relocated from the 18 GHz band, Teligent and TRW, Inc. It is the Commissions’ understanding that Teligent and its related companies have fewer than 1,500 employees, though this may change in the future. TRW is not a small entity. There are approximately 122 licensees in the Rural Radiotelephone Service, and the Commission estimates that there are 122 or fewer small entity licensees in the Rural Radiotelephone Service that may be affected by the rules and policies proposed herein.

71. *Future 24 GHz Licensees.* With respect to new applicants in the 24 GHz band, the Commission has defined “small business” as an entity that, together with controlling interests and affiliates, has average annual gross revenues for the three preceding years not in excess of $15 million. “Very small business” in the 24 GHz band is defined as an entity that, together with controlling interests and affiliates, has average gross revenues not exceeding $3 million for the preceding three years. The SBA has approved these definitions. The Commission will not know how many licensees will be small or very small businesses until the auction, if required, is held.

72. *1670–1675 MHz Services.* An auction for one license in the 1670–1675 MHz band was conducted in 2003. One license was awarded. The winning bidder was not a small entity.

73. *3650–3700 MHz band.* In March 2005, the Commission released a *Report and Order and Memorandum Opinion and Order* that provides for nationwide, non-exclusive licensing of terrestrial operations, utilizing contention-based technologies, in the 3650 MHz band (*i.e.,* 3650–3700 MHz). As of September 2009, more than 1,080 licenses have been granted and more than 4,870 sites have been registered. The Commission has not developed a definition of small entities applicable to 3650–3700 MHz band nationwide, non-exclusive licensees. However, the Commission estimates that the majority of these licensees are Internet Access Service Providers (ISPs) and that most of those licensees are small businesses.

74. *Internet Service Providers.* The 2007 Economic Census places these firms, whose services might include voice over Internet protocol (VoIP), in either of two categories, depending on whether the service is provided over the provider’s own telecommunications facilities (*e.g.,* cable and DSL ISPs), or over client-supplied telecommunications connections (*e.g.,* dial-up ISPs). The former are within the category of Wired Telecommunications Carriers, which has an SBA small business size standard of 1,500 or fewer employees. The latter are within the category of All Other Telecommunications, which has a size standard of annual receipts of $25 million or less. The most current Census Bureau data for all such firms, however, are the 2002 data for the previous census category called Internet Service Providers. That category had a small business size standard of $21 million or less in annual receipts, which was revised in late 2005 to $23 million. The 2002 data show that there were 2,529 such firms that operated for the entire year. Of those, 2,437 firms had annual receipts of under $10 million, and an additional 47 firms had receipts of between $10 million and $24,999,999. Consequently, the Commission estimates that the majority of ISP firms are small entities.

75. The ISP industry has changed dramatically since 2002. The 2002 data cited above may therefore include entities that no longer provide Internet access service and may exclude entities that now provide such service. To ensure that this IRFA describes the universe of small entities that the Commission’s action might affect, the Commission discusses in turn several different types of entities that might be providing Internet access service.

76. The Commission notes that, although it has no specific information on the number of small entities that provide Internet access service over unlicensed spectrum, the Commission includes these entities in its IRFA.

77. *Satellite Telecommunications and All Other Telecommunications.* These two economic census categories address the satellite industry. The first category has a small business size standard of $15 million or less in average annual receipts, under SBA rules. The second has a size standard of $25 million or less in annual receipts. The most current Census Bureau data in this context, however, are from the (last) economic census of 2002, and the Commission will use those figures to gauge the prevalence of small businesses in these categories.

78. The category of Satellite Telecommunications “comprises establishments primarily engaged in providing telecommunications services to other establishments in the telecommunications and broadcasting industries by forwarding and receiving communications signals via a system of satellites or reselling satellite telecommunications.” For this category, Census Bureau data for 2002 show that there were a total of 371 firms that operated for the entire year. Of this total, 307 firms had annual receipts of under $10 million, and 26 firms had receipts of $10 million to $24,999,999. Consequently, the Commission estimates that the majority of Satellite

Telecommunications firms are small entities that might be affected by the Commission's action.

79. The second category of All Other Telecommunications comprises, *inter alia,* "establishments primarily engaged in providing specialized telecommunications services, such as satellite tracking, communications telemetry, and radar station operation. This industry also includes establishments primarily engaged in providing satellite terminal stations and associated facilities connected with one or more terrestrial systems and capable of transmitting telecommunications to, and receiving telecommunications from, satellite systems." For this category, Census Bureau data for 2002 show that there were a total of 332 firms that operated for the entire year. Of this total, 303 firms had annual receipts of under $10 million and 15 firms had annual receipts of $10 million to $24,999,999. Consequently, the Commission estimates that the majority of All Other Telecommunications firms are small entities that might be affected by the Commission's action.

80. *Unlicensed Devices.* In this category, regulatees use devices as permitted on an unlicensed basis under the provisions of Part 15 of the Commission's Rules. The Commission does not have an accurate count of the number of regulatees utilizing this capability. Since 2007, the Census Bureau has placed wireless firms within the new, broad, economic census category Wireless Telecommunications Carriers (except Satellite). Prior to that time, such firms were within the now-superseded category of "Paging" and "Cellular and Other Wireless Telecommunications." Under the present and prior categories, the SBA has deemed a wireless business to be small if it has 1,500 or fewer employees. Because Census Bureau data are not yet available for the new category, the Commission will estimate small business prevalence using the prior categories and associated data. For the category of Paging, data for 2002 show that there were 807 firms that operated for the entire year. Of this total, 804 firms had employment of 999 or fewer employees, and three firms had employment of 1,000 employees or more. For the category of Cellular and Other Wireless Telecommunications, data for 2002 show that there were 1,397 firms that operated for the entire year. Of this total, 1,378 firms had employment of 999 or fewer employees, and 19 firms had employment of 1,000 employees or more. Thus, the Commission estimates that the majority of wireless firms are small.

81. *Part 15 Device Manufacturers.* The Commission has not developed a definition of small entities applicable to unlicensed communications devices manufacturers. Therefore, the Commission will utilize the SBA definition applicable to Radio and Television Broadcasting and Wireless Communications Equipment Manufacturing. The Census Bureau defines this category as follows: "This industry comprises establishments primarily engaged in manufacturing radio and television broadcast and wireless communications equipment. Examples of products made by these establishments are: Transmitting and receiving antennas, cable television equipment, GPS equipment, pagers, cellular phones, mobile communications equipment, and radio and television studio and broadcasting equipment." The SBA has developed a small business size standard for Radio and Television Broadcasting and Wireless Communications Equipment Manufacturing, which is: All such firms having 750 or fewer employees. According to Census Bureau data for 2002, there were a total of 1,041 establishments in this category that operated for the entire year. Of this total, 1,010 had employment of under 500, and an additional 13 had employment of 500 to 999. Thus, under this size standard, the majority of firms can be considered small.

82. *Telephone Apparatus Manufacturing.* The Census Bureau defines this category as follows: "This industry comprises establishments primarily engaged in manufacturing wire telephone and data communications equipment. These products may be standalone or board-level components of a larger system. Examples of products made by these establishments are central office switching equipment, cordless telephones (except cellular), PBX equipment, telephones, telephone answering machines, LAN modems, multi-user modems, and other data communications equipment, such as bridges, routers, and gateways." The SBA has developed a small business size standard for Telephone Apparatus Manufacturing, which is: All such firms having 1,000 or fewer employees. According to Census Bureau data for 2002, there were a total of 518 establishments in this category that operated for the entire year. Of this total, 511 had employment of under 1,000, and an additional 7 had employment of 1,000 to 2,499. Thus, under this size standard, the majority of firms can be considered small.

83. *Other Communications Equipment Manufacturing.* The Census Bureau defines this category as follows: "This industry comprises establishments primarily engaged in manufacturing communications equipment (except telephone apparatus, and radio and television broadcast, and wireless communications equipment)." The SBA has developed a small business size standard for Other Communications Equipment Manufacturing, which is: All such firms having 750 or fewer employees. According to Census Bureau data for 2002, there were a total of 503 establishments in this category that operated for the entire year. Of this total, 493 had employment of under 500, and an additional 7 had employment of 500 to 999. Thus, under this size standard, the majority of firms can be considered small.

D. Description of Projected Reporting, Recordkeeping, and Other Compliance Requirements for Small Entities

84. Should the Commission decide to extend the automatic roaming requirement to non-interconnected services or features, including those that are information services, such as broadband Internet access service, or other non-CMRS services, the only reporting or recordkeeping costs incurred will be administrative costs to ensure that an entity's practices are in compliance with the automatic data roaming rule. The additional compliance requirement is that providers must provide automatic data roaming to any requesting technologically compatible carrier on reasonable and non-discriminatory terms and conditions. The Commission seeks comment on the possible burden such requirements would place on small entities. Also, the Commission seeks comment on whether a special approach toward any possible compliance burden on small entities might be appropriate. Entities, especially small businesses, are encouraged to quantify the costs and benefits of any compliance requirement that may result from this proceeding.

E. Steps Taken To Minimize Significant Economic Impact on Small Entities and Significant Alternatives Considered

85. The RFA requires an agency to describe any significant alternatives that it has considered in developing its approach, which may include the following four alternatives (among others): (1) The establishment of differing compliance or reporting requirements or timetables that take into account the resources available to small entities; (2) the clarification, consolidation, or simplification of

compliance or reporting requirements under the rule for small entities; (3) the use of performance, rather than design, standards; and (4) an exemption from coverage of the rule, or any part thereof, for small entities.

86. The Commission's primary objective in this proceeding is to facilitate seamless wireless communications for consumers, even when they are outside of the coverage area of their own service providers. Recognizing wireless subscribers' increasing reliance on mobile telephony services, especially the growing demand of data services by consumers, the *Second FNPRM* seeks comment on whether it would serve the public interest to extend the applicability of the automatic roaming requirements to non-interconnected services or features, including those that are information services, such as wireless broadband Internet access services, or other non-CMRS services.

87. To the extent that addressing the issues raised in the *Second FNPRM* requires modifying the applicability of the automatic roaming rules, the Commission seeks comment on the effect that such rule changes will have on small entities, on whether alternative rules should be adopted for small entities in particular, and on what effect such alternative rules would have on those entities. The Commission invites comment on ways in which the Commission can achieve its goals, but at the same time impose minimal burdens on small wireless service providers and small non-CMRS providers.

88. The item notes that, in their comments filed on the *2007 FNPRM,* several carriers argued that extending the automatic roaming requirements to non-interconnected services and features would subject networks to capacity restraints that would degrade the quality of service to the network's own customers. They also argued that there are technical issues associated with extending an automatic roaming requirement to wireless broadband Internet access services, such as, for example, different authentication methods and interoperability issues regarding methods for assigning IP addresses. The item seeks comment about whether advances in technology have helped to reduce the potential for these problems to occur or whether parties continue to have concerns with network capacity, network integrity, or network security issues that may be associated with roaming among data networks. To the extent that parties continue to have concerns about the potential for network capacity or other technical issues, the item seeks comment on potential methods to address such issues.

F. Federal Rules that May Duplicate, Overlap, or Conflict with the Proposed Rules

None.

B. Comment Filing Procedures

89. Pursuant to sections 1.415 and 1.419 of the Commission's rules, 47 CFR 1.415, 1.419, interested parties may file comments and reply comments on or before the dates indicated on the first page of this document. Comments may be filed using: (1) The Commission's Electronic Comment Filing System (ECFS), (2) the Federal Government's eRulemaking Portal, or (3) by filing paper copies. *See Electronic Filing of Documents in Rulemaking Proceedings, 63 FR 24121 (1998).*

- *Electronic Filers:* Comments may be filed electronically using the Internet by accessing the ECFS: *http://fjallfoss.fcc.gov/ecfs2* or the Federal eRulemaking Portal: *http://www.regulations.gov.*
- *Paper Filers:* Parties who choose to file by paper must file an original and four copies of each filing. If more than one docket or rulemaking number appears in the caption of this proceeding, filers must submit two additional copies for each additional docket or rulemaking number.

Filings can be sent by hand or messenger delivery, by commercial overnight courier, or by first-class or overnight U.S. Postal Service mail. All filings must be addressed to the Commission's Secretary, Office of the Secretary, Federal Communications Commission.

- All hand-delivered or messenger-delivered paper filings for the Commission's Secretary must be delivered to FCC Headquarters at 445 12th St., SW., Room TW–A325, Washington, DC 20554. The filing hours are 8 a.m. to 7 p.m. All hand deliveries must be held together with rubber bands or fasteners. Any envelopes must be disposed of *before* entering the building.
- Commercial overnight mail (other than U.S. Postal Service Express Mail and Priority Mail) must be sent to 9300 East Hampton Drive, Capitol Heights, MD 20743.
- U.S. Postal Service first-class, Express, and Priority mail must be addressed to 445 12th Street, SW., Washington DC 20554.

People with Disabilities: To request materials in accessible formats for people with disabilities (braille, large print, electronic files, audio format), send an e-mail to *fcc504@fcc.gov* or call the Consumer & Governmental Affairs Bureau at 202–418–0530 (voice), 202–418–0432 (TTY).

C. Paperwork Reduction Act Analysis

90. Concerning the *Order on Reconsideration,* this document does not contain an information collection subject to the Paperwork Reduction Act of 1995 (PRA), Public Law 104–13. Therefore, it does not contain any new or modified "information collection burden for small business concerns with fewer than 25 employees," pursuant to the Small Business Paperwork Relief Act of 2002, Public Law 107–198.

91. Concerning the *Second Further Notice of Proposed Rulemaking,* this document does not contain an information collection subject to the Paperwork Reduction Act of 1995 (PRA), Public Law 104–13. Therefore, it does not contain any new or modified "information collection burden for small business concerns with fewer than 25 employees," pursuant to the Small Business Paperwork Relief Act of 2002, Public Law 107–198.

D. Congressional Review Act

92. The Commission will send a copy of this *Order on Reconsideration and Second Further Notice of Proposed Rulemaking* in a report to be sent to Congress and the Government Accountability Office, pursuant to the Congressional Review Act.

E. Contact Persons

93. For further information concerning this proceeding, please contact Peter Trachtenberg, Spectrum and Competition Policy Division at 202–418–7369, Christina Clearwater, Spectrum and Competition Policy Division at 202–418–1893 or Nese Guendelsberger, Spectrum and Competition Policy Division at 202–418–0634.

III. Ordering Clauses

94. Accordingly, *It is ordered,* pursuant to the authority contained in Sections 1, 4(i), 201, 202, 251(a), 253, 303(r), and 332(c)(1)(B) of the Communications Act of 1934, as amended, 47 U.S.C. 151, 154(i), 201, 202, 251(a), 253, 303(r), and 332(c)(1)(B), and Section 1.429 of the Commission's rules, 47 CFR 1.429, this *Order on Reconsideration and Second Further Notice of Proposed Rulemaking is hereby adopted.*

95. *It is further ordered* Section 20.12 of the Commission's rules IS AMENDED as specified in the Final Rules, and such rule amendments shall be effective 30 days after the date of publication in the **Federal Register.**

96. *It is further ordered* the Petitions for Reconsiderations filed by Leap Wireless International, Inc., MetroPCS Communications, Inc., Spectrum Co., LLC, Sprint Nextel, and T–Mobile USA, Inc. *are hereby granted in part and denied in part* to the extent expressed herein.

97. *It is further ordered* the Commission's Consumer and Governmental Affairs Bureau, Reference Information Center, SHALL SEND a copy of this *Order on Reconsideration and Second Further Notice of Proposed Rulemaking,* including the Initial Regulatory Flexibility Analysis and Final Regulatory Flexibility Analysis, to the Chief Counsel for Advocacy of the Small Business Administration.

Federal Communications Commission.

Marlene H. Dortch,

Secretary.

[FR Doc. 2010–9831 Filed 4–27–10; 8:45 am]

BILLING CODE 6712–01–P

FEDERAL COMMUNICATIONS COMMISSION

47 CFR Part 87

[WT Docket No. 09–42; WT Docket 10–61; FCC 10–37]

Aviation Service Rules

AGENCY: Federal Communications Commission.

ACTION: Proposed rule.

SUMMARY: This document considers a petition for rulemaking requesting that the Commission amend the Commission's rules for aeronautical mobility mobile stations. It also seeks comment on a proposal to permit remote monitoring of certain automated ground stations during installation and maintenance, without a licensed technician present. Finally, it proposes to codify the terms of a waiver permitting the licensing and equipment certification of devices to test aircraft data link systems.

DATES: Submit comments on or before June 28, 2010 and reply comments are due July 27, 2010.

ADDRESSES: You may submit comments, identified by WT Docket 09–42; WT Docket No. 10–61; FCC 10–37, by any of the following methods:

- *Federal eRulemaking Portal: http://www.regulations.gov.* Follow the instructions for submitting comments.
- *Federal Communications Commission's Web Site: http://www.fcc.gov/cgb/ecfs/.* Follow the instructions for submitting comments.
- *People with Disabilities:* Contact the FCC to request reasonable accommodations (accessible format documents, sign language interpreters, CART, etc.) by e-mail: *FCC504@fcc.gov* or phone 202–418–0530 or TTY: 202–418–0432.

For detailed instructions for submitting comments and additional information on the rulemaking process, see the **SUPPLEMENTARY INFORMATION** section of this document.

FOR FURTHER INFORMATION CONTACT: Tim Maguire, Mobility Division, Wireless Telecommunications Bureau, at (202) 418–2155.

SUPPLEMENTARY INFORMATION: This is a summary of the Federal Communications Commission's *Notice of Proposed Rulemaking and Order* (NPRM), WT Docket No. 10–61, WT Docket No. 09–42, and RM–11503; FCC 10–37, adopted March 11, 2010, and released March 16, 2010. The full text of this document is available for inspection and copying during normal business hours in the FCC Reference Center, 445 12th Street SW., Room CY–A257, Washington, DC 20554, or by downloading the text from the Commission's Web site at *http://www.fcc.gov/*. The complete text also may be purchased from the Commission's duplicating contractor, Best Copy and Printing, Inc., Portals II, 445 12th Street, Suite CY–B402, Washington, DC 20554. Alternative formats are available for people with disabilities (Braille, large print, electronic files, audio format), by sending an e-mail to *FCC504@fcc.gov* or calling the Consumer and Government Affairs Bureau at (202) 418–0530 (voice), (202) 418–0432 (TTY).

1. In this document, the Wireless Telecommunications Bureau of the Federal Communications Commission we address pending issues regarding certain Aviation Service ground station equipment. Primarily, we consider a petition for rulemaking filed by the National Telecommunications and Information Administration (NTIA), and supported by the Federal Aviation Administration (FAA), requesting that the Commission amend part 87 of the Commission's Rules to allow use of the frequency 1090 MHz by aeronautical mobility mobile stations for airport surface detection equipment (ASDE–X), commonly referred to as vehicle "squitters." It also seeks comment on a proposal by Potomac Aviation Technology Corporation (PATC) to permit remote monitoring of certain automated ground stations during installation and maintenance, without a licensed technician present. It also proposes to codify the terms of a waiver granted to Aviation Data Systems (Aust) Pty Ltd. (ADS) to permit licensing and equipment certification of devices to test aircraft data link systems.

I. Procedural Matters

A. Ex Parte Rules-Permit-but-Disclose Proceeding

2. This is a permit-but-disclose notice and comment rulemaking proceeding. *Ex parte* presentations are permitted, except during the Sunshine Agenda period, provided they are disclosed as provided in the Commission's rules.

B. Comment Dates

3. Pursuant to §§ 1.415 and 1.419 of the Commission's rules, 47 CFR 1.415, 1.419, interested parties may file comments on or before June 28, 2010 and reply comments on or before July 27, 2010.

4. Commenters may file comments electronically using the Commission's Electronic Comment Filing System (ECFS), the Federal Government's eRulemaking Portal, or by filing paper copies. Commenters filing through the ECFS can send their comments as an electronic file via the Internet to *http://www.fcc.gov/e-file/ecfs.html*. In completing the transmittal screen, commenters should include their full name, U.S. Postal Service mailing address, and the applicable docket or rulemaking number. Commenters may also submit an electronic comment by Internet e-mail. To get filing instructions for e-mail comments, commenters should send an e-mail to *ecfs@fcc.gov,* and should include the following words in the body of the message, "get form." Commenters will receive a sample form and directions in reply. Commenters filing through the Federal eRulemaking Portal *http://www.regulations.gov*, should follow the instructions provided on the Web site for submitting comments.

5. Commenters who chose to file paper comments must file an original and four copies of each comment. If more than one docket or rulemaking number appears in the caption of this proceeding, filers must submit two additional copies for each additional docket or rulemaking number. All filings must be sent to the Commission's Secretary, Office of the Secretary, Federal Communications Commission.

6. Commenters may send filings by hand or messenger delivery, by commercial overnight courier, or by first-class or overnight U.S. Postal Service mail. All hand-delivered or messenger-delivered paper filings for the Commission's Secretary must be delivered to FCC Headquarters at 445 12th St., SW., Room TW–A325,

Washington, DC 20554. All hand deliveries must be held together with rubber bands or fasteners. Any envelopes must be disposed of before entering the building. Commenters must send commercial overnight mail (other than U.S. Postal Service Express Mail and Priority Mail) to 9300 East Hampton Drive, Capitol Heights, MD 20743. Commenters should address U.S. Postal Service first-class mail, Express Mail, and Priority Mail to 445 12th Street, SW., Washington, DC 20554.

7. Interested parties may view documents filed in this proceeding on the Commission's Electronic Comment Filing System (ECFS) using the following steps: (1) Access ECFS at *http://www.fcc.gov/cgb/ecfs*. (2) In the introductory screen, click on "Search for Filed Comments." (3) In the "Proceeding" box, enter the *numerals* in the docket number. (4) Click on the box marked "Retrieve Document List". A link to each document is provided in the document list. Filings and comments are also available for public inspection and copying during regular business hours at the FCC Reference Information Center, 445 12th Street, SW., Room CY–A257, Washington, DC, 20554. Filings and comments also may be purchased from the Commission's duplicating contractor, Best Copy and Printing, Inc., Portals II, 445 12th Street, SW., Room CY–B402, Washington, DC 20554, telephone 1–800–378–3160, or via e-mail *http://www.bcpiweb.com*.

C. Paperwork Reduction Act

8. This *NPRM* does not contain any proposed information collection(s) subject to the Paperwork Reduction Act of 1995, Public Law 104–13. In addition, it does not contain any new or modified "information collection burden for small business concerns with fewer than 25 employees," pursuant to the Small Business Paperwork Relief Act of 2002, Public Law 107–198, *see* 44 U.S.C. 3506(c)(4).

II. Initial Regulatory Flexibility Analysis

9. As required by the Regulatory Flexibility Act (RFA), the Commission has prepared this Initial Regulatory Flexibility Analysis (IRFA) of the possible significant economic impact on small entities of the policies and rules proposed in the *NPRM.* Written public comments are requested on this IRFA. Comments must be identified as responses to the IRFA and must be filed by the deadlines for comments on the *NPRM* as provided in paragraph 24 of the item, *supra.* The Commission will send a copy of the *NPRM,* including this IRFA, to the Chief Counsel for Advocacy of the Small Business Administration. In addition, the *NPRM* and IRFA (or summaries thereof) will be published in the **Federal Register.**

A. Need for, and Objectives of, the Proposed Rules

10. The proposed rules in the *NPRM* are intended to address new requirements for aviation radio equipment in a manner that will further aviation safety; and to amend the aviation rules related to the installation and maintenance of aviation equipment and the testing of aviation data link systems. In the *NPRM,* we request comment specifically on whether we should: (a) Permit the operation and licensing of vehicle squitters on frequency 1090 MHz to promote aviation safety, and (b) remove the requirement that a holder of a General Radiotelephone Operator Licensees (GROL) be physically present during installation and maintenance of certain land-based Aviation Radio Service stations, and (c) permit a new emission type for radionavigation land test equipment (RLT).

B. Legal Basis

11. Authority for issuance of this item is contained in §§ 4(i), 303(r), and 403 of the Communications Act of 1934, as amended, 47 U.S.C. 154(i), 303(r) and 403.

C. Description and Estimate of the Number of Small Entities to Which the Proposed Rules Will Apply

12. The RFA directs agencies to provide a description of and, where feasible, an estimate of the number of small entities that may be affected by the proposed rules, if adopted. The RFA generally defines the term "small entity" as having the same meaning as the terms "small business," "small organization," and "small governmental jurisdiction." In addition, the term "small business" has the same meaning as the term "small business concern" under the Small Business Act. A small business concern is one that: (1) Is independently owned and operated; (2) is not dominant in its field of operation; and (3) satisfies any additional criteria established by the SBA. Pursuant to 5 U.S.C. 601(3), the statutory definition of a small business applies "unless an agency after consultation with the Office of Advocacy of the SBA, and after opportunity for public comment, establishes one or more definitions of such term which are appropriate to the activities of the agency and publishes such definition(s) in the **Federal Register**."

13. Small businesses in the aviation radio services use very high frequency (VHF), medium frequency (MF), or high frequency (HF) radio, radar, aircraft radio, and/or any type of emergency locator transmitter (ELT). The Commission has not developed a definition of small entities specifically applicable to these small businesses. For purposes of this IRFA, therefore, the applicable definition of small entity is the definition under the SBA rules applicable to wireless service providers. The SBA has developed a small business size standard for wireless firms within the two broad economic census categories of "Paging" and "Cellular and Other Wireless Telecommunications." Under both categories, the SBA deems a wireless business to be small if it has 1,500 or fewer employees. For the census category of Paging, Census Bureau data for 2002 show that there were 807 firms in this category that operated for the entire year. Of this total, 804 firms had employment of 999 or fewer employees, and three firms had employment of 1,000 employees or more. Thus, under this category and associated small business size standard, the majority of firms can be considered small. For the census category of Cellular and Other Wireless Telecommunications, Census Bureau data for 2002 show that there were 1,397 firms in this category that operated for the entire year. Of this total, 1,378 firms had employment of 999 or fewer employees, and 19 firms had employment of 1,000 employees or more. Thus, under this second category and size standard, the majority of firms can, again, be considered small.

14. Some of the rules proposed herein may also affect small businesses that manufacture aviation radio equipment. The Commission has not developed a definition of small entities applicable to aviation radio equipment manufacturers. Therefore, the applicable definition is that for Radio and Television Broadcasting and Wireless Communications Equipment Manufacturers. The Census Bureau defines this category as follows: "This industry comprises establishments primarily engaged in manufacturing radio and television broadcast and wireless communications equipment. Examples of products made by these establishments are: Transmitting and receiving antennas, cable television equipment, GPS equipment, pagers, cellular phones, mobile communications equipment, and radio and television studio and broadcasting equipment." The SBA has developed a small business size standard for Radio

and Television Broadcasting and Wireless Communications Equipment Manufacturing, which is: All such firms having 750 or fewer employees. According to Census Bureau data for 2002, there were a total of 1,041 establishments in this category that operated for the entire year. Of this total, 1,010 had employment of under 500, and an additional 13 had employment of 500 to 999. Thus, under this size standard, the majority of firms can be considered small.

D. Description of Projected Reporting, Recordkeeping, and Other Compliance Requirements for Small Entities

15. The rule changes under consideration in the *NPRM* would require manufacturers to meet certain criteria and potential licensees would be required to operate the equipment as prescribed in the Rules, including prior coordination with the FAA. We believe the other proposed rules would have no significant effect on the compliance burdens of regulatees. We invite comment on our tentative conclusion that the possible rule changes will not have a negative impact on small entities, or for that matter any entities, and do not impose new compliance costs on any entity. To the extent that commenters believe that any of the above possible rule changes would impose a new reporting, recordkeeping, or compliance burden on small entities, we ask that they describe the nature of that burden in some detail and, if possible, quantify the costs to small entities.

E. Steps Taken To Minimize Significant Economic Impact on Small Entities and Significant Alternatives Considered

16. The RFA requires an agency to describe any significant alternatives that it has considered in reaching its proposed approach, which may include the following four alternatives: (1) The establishment of differing compliance or reporting requirements or timetables that take into account the resources available to small entities; (2) the clarification, consolidation, or simplification of compliance or reporting requirements under the rule for small entities; (3) the use of performance, rather than design, standards; and (4) an exemption from coverage of the rule, or any part thereof, for small entities.

17. This *NPRM* proposes to permit new equipment to be utilized by ground vehicles at airports; to remove the requirement that the holder of a General Radiotelephone Operator Licensees (GROL) be physically present during an installation or maintenance of certain land-based Aviation Radio Service station; and to permit a new emission type for radionavigation land test equipment (RLT). To the extent commenters believe that other of the discussed rule changes would impose a compliance burden on small entities, we ask that they address whether any of the above approaches to reduce that burden is appropriate.

18. We hereby invite interested parties to address any or all of these regulatory alternatives and to suggest additional alternatives to minimize any significant economic impact on small entities. Any significant alternative presented in the comments will be considered.

F. Federal Rules That May Duplicate, Overlap, or Conflict With the Proposed Rules

19. None.

III. Ordering Clauses

20. Pursuant to sections 4(i), 4(j), and 303(r) of the Communications Act of 1934, as amended, 47 U.S.C. 154(i), 154(j), 303(r), *notice is hereby given* of the proposed regulatory changes described in the *NPRM,* and *comment is sought* on the proposed regulatory changes as set forth below.

21. The Commission's Consumer & Governmental Affairs Bureau, Reference Information Center, SHALL SEND a copy of this *NPRM,* including the Initial Regulatory Flexibility Analysis, to the Chief Counsel for Advocacy of the Small Business Administration.

List of Subjects in 47 CFR Part 87

Air transportation, Communications equipment, Radio, Incorporation by reference.

Federal Communications Commission.

Marlene H. Dortch,

Secretary.

Proposed Rule Changes

For the reasons discussed in the preamble, the Federal Communications Commission proposes to amend 47 part 87 as follows:

PART 87—AVIATION SERVICES

1. The authority citation for part 87 continues to read as follows:

Authority: 47 U.S.C. 154, 303 and 307(e), unless otherwise noted.

2. Section 87.5 is amended by adding the definition of an "Aircraft data link system" and revising the definition of "Radionavigation land test stations" to read as follows:

§ 87.5 Definitions.

* * * * *

Aircraft data link system. A system used to provide data communications between the aircraft and ground personnel necessary for the safe, efficient and economical use of the aircraft.

* * * * *

Radionavigation land test stations. A radionavigation land station which is used to transmit information essential to the testing and calibration of aircraft navigational aids, receiving equipment, data link systems, and interrogators at predetermined surface locations. The Maintenance Test Facility (MTF) is used primarily to permit maintenance testing by aircraft radio service personnel. The Operational Test Facility (OTF) is used primarily to permit the pilot to check a radionavigation system aboard the aircraft prior to takeoff.

* * * * *

3. Section 87.131 is amended by revising the entries to the table for "Aeronautical utility mobile" and "Radionavigation land test" to read as follows:

§ 87.131 Power and emissions.

* * * * *

Class of station	Frequency band/frequency	Authorized emission(s) [9]	Maximum power [1]
* *	* *	* *	*
Aeronautical utility mobile	VHF	A3E	10 watts.
	1090 MHz	M1D	20 watts.
Radionavigation land test	108.150 MHz	A9W	1 milliwatt.
	334.550 MHz	A1N	1 milliwatt.
	Other VHF	M1A, XXA, A1A A1N, A2A, A2D, A9W	1 watt.
	Other UHF	G1D.	100 microwatts.

Class of station	Frequency band/frequency	Authorized emission(s) [9]	Maximum power [1]
		M1A, XXA, A1A, A1N, A2A, A2D, A9W	1 watt.
*	*	*	*

[1] The power is measured at the transmitter output terminals and the type of power is determined according to the emission designator as follows:
(i) Mean power (pY) for amplitude modulated emissions and transmitting both sidebands using unmodulated full carrier.
(ii) Peak envelope power (pX) for all emission designators other than those referred to in paragraph (i) of this note.
[9] Excludes automatic link establishment.

* * * * *

* * * * *

4. Section 87.133 is amended by adding an entry alphabetically in the table to paragraph (a)(7) to read as follows:

§ 87.133 Frequency stability.

(a) * * *

Frequency band (lower limit exclusive, upper limit inclusive), and categories of stations	Tolerance [1]	Tolerance [2]
*	*	*
(7) * * *	.....	
Aeronautical utility mobile stations on 1090 MHz	1,000	1,000
*	*	*

[1] This tolerance is the maximum permitted until January 1, 1990, for transmitters installed before January 2, 1985, and used at the same installation. Tolerance is indicated in parts in 10^6 unless shown as Hertz (Hz).
[2] This tolerance is the maximum permitted after January 1, 1985 for new and replacement transmitters and to all transmitters after January 1, 1990. Tolerance is indicated in parts in 10^6 unless shown as Hertz (Hz).

* * * * *

5. Section 87.137 is amended by adding an entry alphabetically in the table following paragraph (a) to read as follows:

§ 87.137 Types of emission.

(a) * * *

Class of emission	Emission designator	Authorized bandwidth (kilohertz)		
		Below 50 MHz	Above 50 MHz	Frequency deviation
*	*	*	*	*
M1D	14M00M1D	14.0.		
*	*	*	*	*

* * * * *

6. Section 87.173 is amended in the table following paragraph (b) as follows:

a. Revise the entries for 128.825–132.000 MHz through 136.925 MHz.

b. Revise the entry for 1030.000 MHz.

c. Add an entry in numerical order for 1090.000 MHz.

The revisions and additions read as follows:

§ 87.173 Frequencies.

* * * * *

(b) * * *

Frequency or frequency band	Subpart	Class of station	Remarks
*	*	*	*
128.825–132.000 MHz	I, Q	MA, FAE, RLT	Domestic VHF; 25 kHz channel spacing.
132.025–135.975 MHz	O	MA, FAC, FAW, GCO, RCO, RPC	25 kHz channel spacing.
136.000–136.400 MHz	O, S	MA, FAC, FAW, GCO, RCO, RPC	Air traffic control operations; 25 kHz channel spacing.
136.425 MHz	O, S	MA, FAC, FAW, GCO, RCO, RPC	Air traffic control operations.
136.450 MHz	O, S	MA, FAC, FAW, GCO, RCO, RPC	Air traffic control operations.
136.475 MHz	O, S	MA, FAC, FAW, GCO, RCO, RPC	Air traffic control operations.
136.500–136.875 MHz	I, Q	MA, FAE, RLT	Domestic VHF; 25 kHz channel spacing.
136.900 MHz	I, Q	MA, FAE, RLT	International and Domestic VHF.
136.925 MHz	I, Q	MA, FAE, RLT	International and Domestic VHF.
*	*	*	*
1030.000 MHz	Q	RLT	
1090.000 MHz	L	MOU	Vehicle Squitter.

Frequency or frequency band	Subpart	Class of station			Remarks	
*	*	*	*	*	*	*

7. Section 87.349 is amended by adding paragraph (f) to read as follows:

§ 87.349 Frequencies.

* * * * *

(f) The Commission will assign frequency 1090 MHz for use by aeronautical utility mobile stations for runway vehicle identification and collision avoidance after coordination with the FAA, subject to the following conditions:

(1) Eligibility is restricted to airport authorities, or entities approved by the FAA;

(2) No more than two hundred 1090 MHz aeronautical utility mobile stations will be authorized at one airport;

(3) Licenses are limited to only those locations that are within the vicinity of an FAA ASDE–X multilateration system or ADS–B equipment, and/or where the primary purpose for seeking transmit authorization is to provide surface data to aircraft and air traffic control authorities.

(4) Message transmission rates are limited as indicated in the table below:

ADS–B message	Rate when moving	Rate when stationary
(i) Surface Position Message (Types 5, 6, 7, 8)	Every 0.4 to 0.6 seconds	Every 4.8 to 5.2 seconds.
(ii) Aircraft Operational Status (Type 31)	Every 4.8 to 5.2 seconds	Every 4.8 to 5.2 seconds.
(iii) Aircraft Identification and Type (Type 2)	Every 4.8 to 5.2 seconds	Every 9.8 to 10.2 seconds.

8. Section 87.475 is amended by:

a. Redesignating paragraph (b)(9) as paragraph (b)(15).

b. Redesignating paragraph (c)(2) as paragraph (c)(3).

c. Adding new paragraphs (b)(9) through (b)(14).

d. Adding paragraph (c)(2).

e. Revising paragraph (c)(1), and newly designated paragraph (c)(3).

The additions and revisions read as follows:

§ 87.475 Frequencies.

* * * * *

(b) * * *

(9) 2700–2900 MHz: Non-Government land-based radars may be licensed. U.S. Government coordination is required. Applicants must demonstrate a need for the service which the Government is not prepared to render.

(10) 5000–5250 MHz: This band is to be used for the operation of the international standard system (microwave landing system).

(11) 9000–9200 MHz: This band is available to land-based radars. Stations operating in this band may receive interference from stations operating in the radiolocation service.

(12) 14,000–14,400 MHz: This band is available for use in the aeronautical radionavigation service.

(13) 15,400–15,700 MHz: This band is available for use of land stations associated with airborne electronic aids to air navigation.

(14) 24,250–25,250, 31,800–33,400 MHz: In these bands, land-based radionavigation aids are permitted where they operate with airborne radionavigation devices.

* * * * *

(c) *Frequencies available for radionavigation land test stations.* (1) The frequencies set forth in §§ 87.187(c), (e) through (j), (r), (t), and (ff), 87.263(a) and 87.475(b)(6) through (b)(10), (b)(12) and (b)(15) may be assigned to radionavigation land test stations for the testing of aircraft transmitting equipment that normally operate on these frequencies and for the testing of land-based receiving equipment that operate with airborne radionavigation equipment.

(2) The band 129.125–136.975 MHz may also be used to test aircraft data link systems on a secondary basis to other licensed stations. The applicant must notify the appropriate Regional Office of the FAA prior to submitting to the Commission an application for a new station or for modification of an existing station. Each application must include the FAA Regional Office notified and the date of notification. Equipment must be designed so that it will engage in data link exchange only with the aircraft whose identification has been programmed into the device, and must comply with the applicable specifications for VDL Mode 2 operation set forth in the ICAO Manual on VHF Digital Link (VDL) Mode 2 and RTCA DO–281A, Minimum Operational Performance Standards for Aircraft VDL Mode 2 Physical, Link and Network Layer, November 8, 2005. These documents are incorporated by reference in accordance with 5 U.S.C. 552(a), and 1 CFR part 51. The RTCA document is available and may be obtained from the Radio Technical Commission of Aeronautics, One McPherson Square, 1425 K Street N.W., Washington, DC 20005, telephone (202) 833–9339. The ICAO document is available and may be obtained from the ICAO, Customer Services Unit, 999 University Street, Montréal, Quebec H3C 5H7, Canada, telephone (514) 954–8221. The documents are available for inspection at Commission headquarters at 445 12th Street, SW., Washington, DC 20554, telephone (202) 418–0300. Copies may also be inspected at the Office of the Federal Register, 800 North Capital Street, NW., Suite 700, Washington, DC. Copies of these standards can be inspected at the Federal Communications Commission, 445 12th Street, SW., Washington, DC (Reference Information Center) or at the National Archives and Records Administration (NARA). For information on the availability of this material at NARA, call 202–741–6030, or go to: *http://www.archives.gov/federal_register/code_of_federal_regulations/ibr_locations.html.*

(3) The frequencies available for assignment to radionavigation land test stations for the testing of airborne receiving equipment are 108.000 and 108.050 MHz for VHF omni-range; 108.100 and 108.150 MHz for localizer; 334.550 and 334.700 MHz for glide slope; 978 and 979 MHz (X channel)/1104 MHz (Y channel) for DME; 978 MHz for Universal Access Transceiver; 1030 MHz for air traffic control radar beacon transponders; 1090 MHz for Traffic Alert and Collision Avoidance Systems (TCAS); and 5031.0 MHz for microwave landing systems. Additionally, the frequencies in paragraph (b) of this section may be assigned to radionavigation land test stations after coordination with the FAA. The following conditions apply:

* * * * *

[FR Doc. 2010–9096 Filed 4–27–10; 8:45 am]

BILLING CODE 6712–01–P

Notices

Federal Register
Vol. 75, No. 81
Wednesday, April 28, 2010

This section of the FEDERAL REGISTER contains documents other than rules or proposed rules that are applicable to the public. Notices of hearings and investigations, committee meetings, agency decisions and rulings, delegations of authority, filing of petitions and applications and agency statements of organization and functions are examples of documents appearing in this section.

DEPARTMENT OF AGRICULTURE

Center for Nutrition Policy and Promotion; Agency Information Collection Activities; Current Collection: Comment Request—Innovations for Healthy Kids Challenge To Promote the Open Government Initiative

AGENCY: Center for Nutrition Policy and Promotion, USDA.

ACTION: Notice.

SUMMARY: In the legislation that established the Department of Agriculture (USDA) (the Organic Act of 1862, 7 U.S.C. 2201), Congress gave the Department authority for nutrition education and information dissemination. The USDA, Center for Nutrition Policy and Promotion has been granted emergency approval to conduct the information collection, *Innovations for Healthy Kids Challenge* to Promote the Open Government Initiative. The collection will contribute to the goal of achieving the President's Open Government Initiative and increase access to socially relevant technologies that seek to improve eating and physical activity behaviors among children. In accordance with the Paperwork Reduction Act of 1995, this notice invites the general public and other public agencies to comment on this current information collection. This is a current collection to develop applications and games using a recently released USDA nutrition data on Data.gov

DATES: Written comments on this notice must be submitted on or before June 28, 2010.

ADDRESSES: Comments are invited on: (a) Whether the proposed collection of information is necessary for the proper performance of the functions of the agency, including whether the information shall have practical utility; (b) the accuracy of the agency's estimate of the burden of the proposed collection of information, including the validity of the methodology and assumptions that were used; (c) ways to enhance the quality, utility, and clarity of the information to be collected; and (d) ways to minimize the burden of the collection of information on those who are to respond, including use of appropriate automated, electronic, mechanical, or other technological collection techniques or other forms of information technology.

Comments may be sent to: Jackie Haven, Director, Nutrition Marketing and Communications Division, Center for Nutrition Policy and Promotion, United States Department of Agriculture, 3101 Park Center Drive, Room 1034, Alexandria, Virginia, 22302. Comments may also be submitted via fax to the attention of Jackie Haven at 703–305–3300 or via e-mail to *jackie.haven@cnpp.usda.gov.* Comments will also be accepted through the Federal eRulemaking Portal. Go to *http://www.regulations.gov*, and follow the online instructions for submitting comments electronically.

All written comments will be open for public inspection at the office of the Food, Nutrition and Consumer Services during regular business hours (8:30 a.m. to 5 p.m. Monday through Friday) at 3101 Park Center Drive, Room 1034, Alexandria, Virginia 22302.

All responses to this notice will be summarized and provided to the Office of Management and Budget (OMB). All comments will also become a matter of public record.

FOR FURTHER INFORMATION CONTACT: Requests for additional information or copies should be directed to Jackie Haven (703) 305–7600.

SUPPLEMENTARY INFORMATION:

Title: Innovations for Healthy Kids Challenge to Promote the Open Government Initiative.

OMB Number: 0584–0555.

Expiration Date: September 30, 2010.

Type of Request: Notice.

Abstract: The *Innovations for Healthy Kids Challenge* is an initiative of the USDA Food, Nutrition and Consumer Services. The Challenge is intended to provide recognition to American entrepreneurs, software developers, and students for developing innovative software applications using a recently released USDA nutrition data on Data.gov. The Challenge was launched March 8, 2010. A description of the Challenge and information about registration and how to enter can be found at *http://www.appsforkids.com*. With childhood obesity continuing to rise, the goal of the Challenge is to motivate the creation of innovative, fun, and engaging applications or games that encourage children, especially "tweens" (aged 9–12), to eat more healthfully and be more physically active.

The purpose of the Challenge is to develop new and innovative technology to reach children, either directly or through their parents using the USDA nutrition dataset found at *http://www.data.gov/details/1294*. This initiative will not only increase access to socially relevant technologies that seek to improve eating and physical activity behaviors among children but could also expand the tools available through the MyPyramid Web site. The Challenge will explore ways to address the following behavioral objectives:

- Increase consumption of whole grains, fruit and vegetables, low- or non-fat milk, and lean sources of protein.
- Develop contemporary and relevant nutrition education tools for kids.
- Address calorie intake and food portion sizes.
- Increase physical activity.

The demand for innovative and relevant nutrition education technologies is needed to address the epidemic rates of obesity within the United States. Developers, programmers, highly motivated gamers and the general public are invited to develop educational games and applications that are based on the Food Nutrition and Consumer Services (FNCS) Dataset. The data has been pre-calculated for common portion sizes and portion increments, which will allow developers to streamline their programming. The calories from solid fats, added sugars, and alcohol in each portion size have also been pre-calculated, to simplify the calorie calculations.

As an option, submissions may use the USDA nutrition source code or any other data set(s) provided on Data.gov in addition to the USDA nutrition dataset required for the contest. Submissions may operate in a variety of platforms broadly available and at no expense (free of charge) to the public. Applications must incorporate at least one of the following concepts, either independently or in combination:

- Teaching kids to eat more whole grain.
- Increasing fruit and vegetable consumption.
- Focusing on consuming more low- or non-fat milk.
- Choosing lean sources of protein (meat and beans).
- Making food group education fun.
- Understanding calories and energy balance.
- Increasing choices of foods with high nutrition value and decreasing amounts of foods with solid (saturated) fats and added sugars (*i.e.,* "extra" calories), and decreasing amounts of sodium.
- Identifying and consuming proper food portion sizes.
- Being more physically active.
- Balancing physical activity and food intake.

Challenge participants will own the intellectual property rights to submitted applications but USDA will maintain a royalty free license to post or link to the application on the official USDA and nutritional partner Web sites and make it publically available, if desired.

Affected Public: The affected public are individual and households; businesses (*e.g.,* programmers, students, technology professionals and gamers).

Estimated Number of Innovations for Healthy Kids Challenge Respondents: Challenge participants will voluntarily develop applications and games using the FNCS nutrition data. Based on a review of initiatives with similar scope, 100 responses are anticipated from the affected public.

Estimated Number of Responses per Repondent: 1.

Estimated Total Annual Responses: 100.

Estimated Time per Response: Total time to respond to this information collection will include completing the application and developing products using the FNCS nutrition data. Based on information provided by the Challenge administrator, it is estimated that respondents will need about 3,300 minutes (55 hours) to develop products and approximately 15 minutes (.25 hours) to complete the online application.

TABLE 1—INNOVATIONS FOR HEALTHY KIDS CHALLENGE TRACKER ESTIMATED BURDEN HOURS

Respondent type	Affected public	Number of respondents	Number of responses per respondent	Est. total annual responses	Hours per response	Total burden
Contest participants (*e.g.,* programmers, students, technology professionals and gamers).	Individual/household.	25	1	25	55.25	1,381.25
	Business	75	1	75	55.25	4,143.75
Total Annual Burden Estimates ..	.....	100	.....	100	.....	5,525.00

Estimated Annual Burden Hours: 5,525.

Dated: April 20, 2010.

Robert Post,

Acting Executive Director, Center for Nutrition Policy and Promotion.

[FR Doc. 2010–9778 Filed 4–27–10; 8:45 am]

BILLING CODE 3410–30–P

DEPARTMENT OF AGRICULTURE

Rural Business—Cooperative Service

Notice of Funding Availability (NOFA) for the Small, Socially-Disadvantaged Producer Grant (SSDPG) Program in Fiscal Year 2010

AGENCY: Rural Business-Cooperative Service, USDA.

ACTION: Notice of funding availability.

SUMMARY: The Rural Business-Cooperative Service announces the availability of approximately $3.463 million in competitive grant funds for fiscal year (FY) 2010 for cooperatives or associations of cooperatives to assist small, socially-disadvantaged agricultural producers. USDA Rural Development Cooperative Programs hereby requests proposals from eligible cooperatives and associations of cooperatives for a competitively awarded grant to fund technical assistance to small, socially-disadvantaged agricultural producers in rural areas. The maximum award per grant is $200,000.

DATES: Applications for grants must be submitted on paper or electronically according to the following deadlines:

Paper copies must be postmarked and mailed, shipped, or sent overnight no later than July 27, 2010, to be eligible for FY 2010 grant funding. Late applications are not eligible for FY 2010 grant funding.

Electronic copies must be received by July 27, 2010, to be eligible for FY 2010 grant funding. Late applications will not eligible for FY 2010 grant funding.

ADDRESSES: Application materials for the SSDPG program may be obtained at *http://www.rurdev.usda.gov/rbs/coops/ssdg/ssdpg.htm* or by contacting the applicant's USDA Rural Development State Office. Contact information for State Offices can be found at *http://www.rurdev.usda.gov/rbs/coops/rcdg/Contacts.htm* or by dialing 1–800–670–6553.

Paper applications must be submitted to the USDA Rural Development State Office where the applicant is located. Electronic applications must be submitted through the Grants.gov Web site at *http://www.grants.gov,* following the instructions found on this Web site.

FOR FURTHER INFORMATION CONTACT: Visit the program Web site at *http://www.rurdev.usda.gov/rbs/coops/ssdpg/ssdpg.htm* for application assistance or contact a USDA Rural Development State Office. Applicants are strongly encouraged to contact their State Offices well in advance of the deadline to discuss their Projects and ask any questions about the application process.

SUPPLEMENTARY INFORMATION:

Overview

Federal Agency: USDA Rural Business Cooperative Service.

Funding Opportunity Title: Small, Socially-Disadvantaged Producer Grant.

Announcement Type: Initial Announcement.

Catalog of Federal Domestic Assistance Number: 10.771.

DATES: *Application Deadline:* Completed applications for grants may be submitted on paper or electronically according to the following deadlines:

Paper copies must be postmarked and mailed, shipped, or sent overnight no later than July 27, 2010, to be eligible for FY 2010 grant funding. Late applications are not eligible for FY 2010 grant funding.

Complete electronic copies must be received by July 27, 2010, to be eligible for FY 2010 grant funding. Late applications are not eligible for FY 2010 grant funding.

I. Funding Opportunity Description

This notice is issued pursuant to the Agriculture, Rural Development, Food and Drug Administration, and Related Agencies Appropriations Act, 2010, Public Law 111–80 (October 21, 2009) that authorizes, not to exceed, $3.463 million for cooperatives or associations of cooperatives whose primary focus is to provide assistance to small, socially-disadvantaged producers and whose governing board and/or membership is comprised of at least 75 percent small, socially disadvantaged producers. The Secretary of Agriculture has delegated the program's administration to USDA Rural Development Cooperative Programs.

Formerly known as the Small, Minority Producer Grant Program, the primary objective of the SSDPG program is to provide technical assistance to small, socially-disadvantaged agricultural producers through eligible cooperatives and associations of cooperatives. Grants are awarded on a competitive basis. The maximum award amount per grant is $200,000.

Definitions

Agency—Rural Business-Cooperative Service, an agency of the United States Department of Agriculture (USDA) Rural Development or a successor agency.

Agricultural Commodity—An unprocessed product of farms, ranches, nurseries, and forests. Agricultural commodities include: Livestock, poultry, and fish; fruits and vegetables; grains, such as wheat, barley, oats, rye, triticale, rice, corn, and sorghum; legumes, such as field beans and peas; animal feed and forage crops; seed crops; fiber crops, such as cotton; oil crops, such as safflower, sunflower, corn, and cottonseed; trees grown for lumber and wood products; nursery stock grown commercially; Christmas trees; ornamentals and cut flowers; and turf grown commercially for sod. Agricultural commodities do not include horses or animals raised as pets, such as cats, dogs, and ferrets.

Association of Cooperatives—An association of cooperatives whose primary focus is to provide assistance to small, socially-disadvantaged agricultural producers and where the governing board and/or membership is comprised of at least 75 percent socially-disadvantaged agricultural producers.

Conflict of Interest—A situation in which the ability of a person or entity to act impartially would be questionable due to competing professional or personal interests. An example of conflict of interest occurs when the grantee's employees, board of directors, including their immediate family, have a legal or personal financial interest in the recipients receiving the benefits or services of the grant.

Cooperative—A farmer- or rancher-owned and -controlled business, organized and chartered as a cooperative, from which benefits are derived and distributed equitably on the basis of use by each of the farmer or rancher owners whose primary focus is to provide assistance to small, socially-disadvantaged agricultural producers and where the governing board and/or membership is comprised of at least 75 percent socially-disadvantaged producers.

Cooperative Programs—The office within Rural Business—Cooperative Service, and any successor organization, that administers programs authorized by the Cooperative Marketing Act of 1926 (7 U.S.C. 451 *et seq.*) and such other programs identified in USDA regulations.

Economic Development—The economic growth of an area as evidenced by increase in total income, employment opportunities, decreased out-migration of population, value of production, increased diversification of industry, higher labor force participation rates, increased duration of employment, higher wage levels, or gains in other measurements of economic activity, such as land values.

Feasibility Study—An analysis of the economic, market, technical, financial, and management feasibility of a proposed Project.

Operating Cost—The day-to-day expenses of running a business; for example: Utilities, rent, salaries, depreciation, product production costs, marketing and advertising, and other basic overhead items.

Project—Includes all activities to be funded by the Small Socially-Disadvantaged Producer Grant.

Rural and Rural Area—Any area of a State—

(1) Not in a city or town that has a population of more than 50,000 inhabitants, according to the latest decennial census of the United States; and

(2) The contiguous and adjacent urbanized area,

(3) Urbanized areas that are rural in character as defined by U.S.C. 1991 (a) (13), as amended by Section 6018 of the Food, Conservation, and Energy Act of 2008, Public Law 110–246 (June 18, 2008).

(4) For the purposes of this definition, cities and towns are incorporated population centers with definite boundaries, local self-government, and legal powers set forth in a charter granted by the State. Notwithstanding any other provision of this paragraph, within the areas of the County of Honolulu, Hawaii, and the Commonwealth of Puerto Rico, the Secretary may designate any part of the areas as a rural area if the Secretary determines that the part is not urban in character, other than any area included in the Honolulu census designated place (CDP) or the San Juan CDP.

Rural Development—A mission area within USDA consisting of the Office of Under Secretary for Rural Development, Rural Development Business and Cooperative Programs, Rural Development Housing Programs, and Rural Development Utilities Programs and any successors.

Small, Socially-Disadvantaged Producer—Socially-disadvantaged persons or at least 75 percent socially-disadvantaged producer-owned entities including farmers, ranchers, loggers, agricultural harvesters, and fishermen, that have averaged $250,000 or less in annual gross sales of agricultural products in the last 3 years.

Socially-Disadvantaged Producer—Individual agricultural producer who is a member of a group whose members have been subjected to racial, ethnic or gender prejudice, without regard for their individual qualities.

State—Includes each of the several States, the Commonwealth of Puerto Rico, the Virgin Islands of the United States, Guam, American Samoa, the Commonwealth of the Northern Mariana Islands, and, as may be determined by the Secretary to be feasible, appropriate and lawful, the Federated States of Micronesia, the Republic of the Marshall Islands and the Republic of Palau.

Technical Assistance—An advisory service performed for the benefit of a small, socially-disadvantaged producer such as market research; product and/or service improvement; legal advice and assistance; feasibility study, business plan, and marketing plan development; and training. Technical assistance does not include the operating costs of a cooperative being assisted.

II. Award Information

Type of Award: Grant.

Fiscal Year Funds: FY 2010.

Approximate Total Funding: $3.463 million.

Approximate Number of Awards: 17.

Approximate Average Award: $200,000.

Floor of Award Range: None.

Ceiling of Award Range: $200,000.

Anticipated Award Date: September 1, 2010.

Budget Period Length: 12 months.

Project Period Length: 12 months.

III. Eligibility Information

A. Eligible Applicants

Applicants must be a cooperative or an association of cooperatives as defined in this Notice, and must be able to verify their legal structure as a cooperative in the State in which they are incorporated. Individuals are not eligible for this program.

B. Cost Sharing or Matching

No matching funds are required.

C. Other Eligibility Requirements

Use of Funds: Funds may only be used for technical assistance Projects as defined in this notice.

Project Area Eligibility: The Project proposed must take place in a rural area as defined in this Notice.

Grant Period Eligibility: If awarded, grant funds must be expended in 12 months. Applications must have a time frame of no more than 365 days with the time period beginning no earlier than October 1, 2010, and ending no later than December 31, 2011. Projects must be completed within the 12-month time frame. The Agency will not approve requests to extend the grant period. Applications that request funds for a time period ending after December 31, 2011, will not be considered for funding.

Completeness Eligibility: Applications lacking sufficient information to determine eligibility and scoring will be considered ineligible. Applications that are non-responsive to this notice will be considered ineligible.

Multiple Grant Eligibility: An applicant may not submit more than one grant application in any one funding cycle.

Activity Eligibility: Applications must propose technical assistance, as defined in this Notice, to benefit their members or other small socially-disadvantaged producers who are not members, in order to be considered for funding. Applications having ineligible costs equaling more than 10 percent of total Project costs will be determined ineligible and will not be considered for funding. Applications having ineligible costs of 10 percent or less of total Project costs and which are selected for funding, must remove all ineligible costs from the budget and replace them with eligible activities or the amount of the grant award will be reduced accordingly. Applicants may not submit applications that duplicate current activities or activities paid for by other funded grant programs.

IV. Application and Submission Information

A. Address To Request Application Package

The application package for applying on paper for this funding opportunity can be obtained at *http://www.rurdev.usda.gov/rbs/coops/ssdpg/ssdpg.htm.* Alternatively, applicants may contact their USDA Rural Development State Office. Contact information for State Offices can be found at *http://www.rurdev.usda.gov/rbs/coops/rcdg/Contacts.htm* or by dialing 1–800–670–6553.

For electronic applications, applicants must visit *http://www.grants.gov* and follow the instructions.

B. Content and Form of Submission

Applications must be submitted on paper or electronically. An application guide may be viewed at *http://www.rurdev.usda.gov/rbs/coops/ssdpg/ssdpg.htm.* It is recommended that applicants use the template provided on the Web site. The template can be filled out electronically and printed out for submission with the required forms for paper submission or it can be filled out electronically and submitted as an attachment through *http://www.grants.gov.*

If the application is submitted electronically, the applicant must follow the instructions given at the Internet address: *http://www.grants.gov.* Applicants are advised to visit the site well in advance of the application deadline if they plan to apply electronically to ensure that they have obtained the proper authentication and have sufficient computer resources to complete the application.

Applicants must complete and submit the following elements. The Agency will screen all applications for eligibility and determine whether the application is complete and sufficiently responsive to the requirements set forth in this Notice to allow for an informed review. Information submitted as part of the application will be protected to the extent permitted by law.

1. Form SF–424, "Application for Federal Assistance." The form must be completed, signed and submitted as part of the application package.

Please note that applicants are required to have a Dun and Bradstreet Data Universal Numbering System (DUNS) number. The DUNS number is a nine-digit identification number, which uniquely identifies business entities. There is no charge. To obtain a DUNS number, access *http://www.dnb.com/us/* or call 866–705–5711. For more information, *see* the SSDPG Web site at *http://www.rurdev.usda.gov/rbs/coops/ssdpg/ssdpg.htm* or by contacting the applicant's USDA Rural Development State Office. In addition to the DUNS number, an applicant must provide their Employment Identification Number.

2. Form SF–424A, "Budget Information-Non-Construction Programs." This form must be completed and submitted as part of the application package.

3. Form SF–424B, "Assurances—Non-Construction Programs." This form must be completed, signed, and submitted as part of the application package.

4. *Table of Contents.* For ease of locating information, each application must contain a detailed Table of Contents (TOC) immediately following the SF–424B. The TOC must include page numbers for each component of the application. Pagination should begin immediately following the TOC.

5. *Executive Summary.* A summary of the proposal, not to exceed one page, must briefly describe the Project, tasks to be completed and other relevant information that provides a general overview of the Project.

6. *Eligibility Discussion:* A detailed discussion, not to exceed four pages, must describe how the applicant meets the following requirements.

(i) *Applicant Eligibility:* Applicant must describe how they meet the definition of a cooperative or an association of cooperatives as defined in this Notice. Applicant must also verify their incorporation as a cooperative or an association of cooperatives in the State they have applied by providing the State's Certificate of Good Standing, and their Articles of Incorporation and By-Laws. The applicant must apply as only one type of applicant.

(ii) *Use of Funds:* The applicant must provide a detailed discussion on how the proposed Project activities meet the definition of technical assistance.

(iii) *Project Area:* The applicant must provide specific information on where the Projects are planned to be located and that the areas meet the definition of "rural area."

(iv) *Grant Period:* The applicant must provide a time frame for the proposed Project and discuss how the Project will be completed within that time frame.

7. *Budget/Work plan:* The applicant must describe, in detail not to exceed four pages, the purpose of the grant, what type of assistance will be provided, and the total amount of funds needed for each Project. The budget must also present a breakdown of

estimated costs associated with each task/activity for each Project. The amount of grant funds requested will be adjusted if the applicant does not have justification for all costs.

8. *Evaluation Criteria:* Each of the evaluation criteria referenced in this notice must be addressed, specifically and individually on separate pages, in narrative form, not to exceed a total of two pages for each evaluation criteria. Failure to address each evaluation criteria will result in the application being determined ineligible.

C. Submission Dates and Times

Application Deadline Date: July 27, 2010.

Explanation of Deadlines: Paper applications must be POSTMARKED and mailed, shipped, or sent overnight by the deadline date. Electronic applications must be RECEIVED by *http://www.grants.gov* by the deadline date. Courier applications must be delivered by the deadline date. If the Applicant's application does not meet the deadline, it will not be considered for funding. Applicants will be notified if their application did not meet the submission deadline.

D. National Environmental Policy Act

This NOFA has been reviewed in accordance with 7 CFR part 1940, subpart G, "Environmental Program." Rural Development has determined that an Environmental Impact Statement is not required because the issuance of regulations and instructions, as well as amendments to them, describing administrative and financial procedures for processing, approving, and implementing the Agency's financial programs is categorically excluded in the Agency's National Environmental Policy Act (NEPA) regulation found at 7 CFR Part 1940.310(e)(3) of subpart G, "Environmental Program." Thus, in accordance with NEPA of 1969 (42 U.S.C. 4321–4347), Rural Development has determined that this NOFA does not constitute a major Federal action significantly affecting the quality of the human environment. Furthermore, individual awards under this NOFA are hereby classified as Categorical Exclusions according to 1940.310(e), the award of financial assistance for planning purposes, management and feasibility studies, or environmental impact analyses, which do not require any additional documentation.

E. Civil Rights Compliance Requirements

All grants made under this Notice are subject to Title VI of the Civil Rights Act of 1964 as required by the USDA (7 CFR 15, subpart A) and Section 504 of the Rehabilitation Act of 1973.

F. Intergovernmental Review of Applications

Executive Order 12372, Intergovernmental Review of Federal Programs, applies to this program. This EO requires that Federal agencies provide opportunities for consultation on proposed assistance with State and local governments. Many States have established a Single Point of Contact (SPOC) to facilitate this consultation. A list of States that maintain an SPOC may be obtained at *http://www.whitehouse.gov/omb/grants/spoc.html.* If your State has an SPOC, you may submit your application directly for review. Any comments obtained through the SPOC must be provided to Rural Development for consideration as part of your application. If your State has not established a SPOC or you do not want to submit your application to the SPOC, Rural Development will submit your application to the SPOC or other appropriate agency or agencies.

You are also encouraged to contact Cooperative Programs at 202–720–8460 or *cpgrants@wdc.usda.gov* if you have questions about this process.

G. Funding Restrictions

Grant funds must be used for technical assistance. No funds made available under this solicitation shall be used to:

1. Plan, repair, rehabilitate, acquire, or construct a building or facility, including a processing facility;

2. Purchase, rent, or install fixed equipment, including processing equipment;

3. Purchase vehicles, including boats;

4. Pay for the preparation of the grant application;

5. Pay expenses not directly related to the funded Project;

6. Fund political or lobbying activities;

7. Fund any activities prohibited by 7 CFR parts 3015 or 3019;

8. Fund architectural or engineering design work for a specific physical facility;

9. Fund any direct expenses for the production of any commodity or product to which value will be added, including seed, rootstock, labor for harvesting the crop, and delivery of the commodity to a processing facility;

10. Fund research and development;

11. Purchase land;

12. Duplicate current activities or activities paid for by other funded grant programs.

13. Pay costs of the Project incurred prior to the date of grant approval;

14. Pay for assistance to any private business enterprise, which does not have at least 51 percent ownership by those who are either citizens of the United States or reside in the United States after being legally admitted for permanent residence;

15. Pay any judgment or debt owed to the United States;

16. Pay the operating costs of cooperative and/or association of cooperatives;

17. Pay expenses for applicant employee training; or

18. Pay for any goods or services from a person who has a conflict of interest with the grantee.

H. Other Submission Requirements

Applicants may submit their paper application for a grant to their Rural Development State Office listed under the Addresses section. Applicants may submit their application electronically at *http://www.grants.gov.* Applications may not be submitted by electronic mail, facsimile, or hand-delivery. Each application submission must contain all required documents in one envelope, if sent by mail or express delivery service.

V. Application Scoring Criteria Review Information

A. Criteria

All eligible and complete applications will be evaluated based upon the following criteria. Failure to address any one of the following criteria by the application deadline will result in the application being determined ineligible and the application will not be considered for funding. The total points possible for the criteria are 50. Any application receiving less than 30 total points will not be funded.

1. *Technical Assistance.* (0–15 points) The application will be evaluated to determine the applicant's ability to assess the needs of small socially-disadvantaged producers, plan and conduct appropriate and effective technical assistance, and identify the expected outcomes of that assistance.

(i) 0 points will be awarded if the applicant does not substantively address this criterion.

(ii) 5 points will be awarded if the applicant demonstrates weakness in addressing this criterion.

(iii) 10 points will be awarded if the applicant demonstrates they meet part but not all of the criterion.

(iv) 15 points will be awarded if the applicant identifies specific needs of the socially-disadvantaged producers to be assisted; clearly articulates a logical and detailed plan of assistance for addressing those needs; and discusses

realistic outcomes of planned assistance.

2. *Experience.* (0–15 points) Points will be awarded based upon length of experience of identified staff or consultants in providing technical assistance, as defined in this Notice. Applicants must describe the specific type of technical assistance experience for each identified staff member or consultant, as well as years of experience in providing that assistance. In addition, résumés for each individual staff member or consultant must be included as an attachment, listing their experience for the type of technical assistance proposed. The attachments will not count toward the maximum page total. The Agency will compare the described experience to the work plan to determine relevance of experience.

(i) 0 points will be awarded if the staff or consultants demonstrate no relevant experience in providing technical assistance;

(ii) 5 points will be awarded if at least one of the identified staff or consultants demonstrates more than two years of experience in providing relevant technical assistance;

(iii) 10 points will be awarded if at least one of the identified staff or consultants demonstrates 5 or more years of experience in providing relevant technical assistance; or

(iv) 15 points will be awarded if all of the identified staff or consultants demonstrate 5 or more years of experience in providing relevant technical assistance.

3. *Commitment.* (0–15 points) The Agency will evaluate the applicant's commitment to providing technical assistance to small, socially-disadvantaged producers in rural areas. Points will be awarded based upon the number of socially-disadvantaged producers being assisted. Applicants must list the number and location of small, socially-disadvantaged producers that will directly benefit from the assistance provided.

(i) 0 points will be awarded if the applicant does not substantively address this criterion.

(ii) 5 points will be awarded if the proposed Project will benefit 1–10 small, socially-disadvantaged producers;

(iii) 10 points will be awarded if the proposed Project will benefit 11–50 small, socially-disadvantaged producers; or

(iv) 15 points will be awarded if the proposed Project will benefit more than 50 small, socially-disadvantaged producers.

4. *Local support.* (0–5 points) Applications will be reviewed for local support for the technical assistance activities of the cooperative. Applicants that demonstrate strong support from potential beneficiaries and other developmental organizations will receive more points than those not evidencing such support.

(i) 0 points will be awarded if the applicant does not substantively address this criterion.

(ii) 1 point will be awarded if the applicant provides or references 2–3 support letters that demonstrate substantive support from potential beneficiaries and/or support from local organizations.

(iii) 2 points will be awarded if the applicant provides or references 4–5 support letters that demonstrate substantive support from potential beneficiaries and/or support from local organizations.

(iv) 3 points will be awarded if the applicant provides or references 6–7 support letters that demonstrate substantive support from potential beneficiaries and/or support from local organizations.

(v) 4 points will be awarded if the applicant provides or references 8–9 support letters that demonstrate substantive support from potential beneficiaries and/or support from local organizations.

(vi) 5 points will be awarded if the applicant provides or references 10 support letters that demonstrate substantive support from potential beneficiaries and/or support from local organizations.

The applicant may submit a maximum of 10 letters of support. These letters should be included as an attachment to the application and will not count against the maximum page total. Additional letters from industry groups, commodity groups, local and State government, and similar organizations should be referenced, but not included in the application package. When referencing these letters, provide the name of the organization, date of the letter, the nature of the support, and the name and title of the person signing the letter.

B. Review and Selection Process

The Agency will screen all proposals to determine whether the application is eligible and sufficiently responsive to the requirements set forth in this Notice to allow for an informed review. Applications will be screened for eligibility and scored by the applicable State Office, then submitted to the National Office for review and ranking. The National Office will review the scores based upon the point allocation specified in this Notice. Applications will be funded in scoring rank order and submitted to the Administrator in rank order with funding level recommendations. The Administrator will break scoring ties based on Agency priorities for geographic distribution of grants, and serving underserved groups and underserved areas.

C. Anticipated Announcement and Award Dates

Award Date: The announcement of award selections is expected to occur on or about September 1, 2010.

VI. Award Administration Information

A. Award Notices

Successful applicants will receive a notification of tentative selection for funding from Rural Development. Applicants must comply with all applicable statutes, regulations, and this notice before the grant award will receive final approval.

Unsuccessful applicants will receive notification, including appeal rights, by mail.

B. Administrative and National Policy Requirements

7 CFR parts 3015, 3019, and subparts A and F of 7 CFR part 4284 are applicable to grants made under this notice. These regulations may be obtained at *http://www.gpoaccess.gov/cfr/index.html.*

The following additional requirements apply to grantees selected for this program:

- Agency approved Grant Agreement.
- Letter of Conditions.
- Form RD 1940–1, "Request for Obligation of Funds."
- Form RD 1942–46, "Letter of Intent to Meet Conditions."
- Form AD–1047, "Certification Regarding Debarment, Suspension, and Other Responsibility Matters—Primary Covered Transactions."
- Form AD–1048, "Certification Regarding Debarment, Suspension, Ineligibility and Voluntary Exclusion—Lower Tier Covered Transactions."
- Form AD–1049, "Certification Regarding a Drug-Free Workplace Requirement (Grants)."
- Form RD 400–4, "Assurance Agreement."

Additional information on these requirements can be found at *http://www.rurdev.usda.gov/rbs/coops/ssdpg/ssdpg.htm.*

Fund Disbursement: The Agency will determine, based on 7 CFR Parts 3015, 3016 and 3019, as applicable, whether disbursement of a grant will be by advance or reimbursement. As needed, but not more frequently than once every

30 days, an original of SF–270, "Request for Advance or Reimbursement," may be submitted to Rural Development. Recipient's request for advance shall not be made in excess of reasonable outlays for the month covered.

Reporting Requirements: Grantees must provide Rural Development with an original or an electronic copy that includes all required signatures of the following reports. The reports should be submitted to the Agency contact listed on the Grant Agreement and Letter of Conditions. Failure to submit satisfactory reports on time may result in suspension or termination of the grant. Grantees will submit:

1. *Form SF–425.* A "Federal Financial Report," listing expenditures according to agreed upon budget categories, on a semi-annual basis. Reporting periods end each March 31 and September 30. Reports are due 30 days after the reporting period ends.

2. Semi-annual performance reports comparing accomplishments to the objectives stated in the proposal, identifying all tasks completed to date and providing documentation supporting the reported results. If the original schedule provided in the work plan is not being met, the report should discuss the problems or delays that may affect completion of the Project. Objectives for the next reporting period should be listed. Compliance with any special condition on the use of award funds must be discussed. Reports are due as provided in paragraph (1) of this section. Supporting documentation must also be submitted for completed tasks. The supporting documentation for completed tasks includes, but is not limited to, feasibility studies, marketing plans, business plans, articles of incorporation, and bylaws as they relate to the assistance provided.

3. Final Project performance reports comparing accomplishments to the objectives stated in the proposal, identifying all tasks completed, and providing documentation supporting the reported results. If the original schedule provided in the work plan was not met, the report must discuss the problems or delays that affected completion of the Project. Compliance with any special condition on the use of award funds must be discussed. Supporting documentation for completed tasks must also be submitted. The supporting documentation for completed tasks includes, but is not limited to, feasibility studies, marketing plans, business plans, articles of incorporation, and bylaws as they relate to the assistance provided. The final performance report is due within 90 days of the completion of the Project. The report must also include a summary at the end of the report with the number of small socially disadvantaged producers assisted to assist in documenting the annual performance goals of the SSDPG program for Congress.

VII. Agency Contacts

For general questions about this announcement and for program technical assistance, please contact the appropriate State Office as indicated in the **ADDRESSES** section of this notice.

VIII. Non-Discrimination Statement

The U.S. Department of Agriculture (USDA) prohibits discrimination in all its programs and activities on the basis of race, color, national origin, age, disability, and where applicable, sex, marital status, familial status, parental status, religion, sexual orientation, genetic information, political beliefs, reprisal, or because all or part of an individual's income is derived from any public assistance program. (Not all prohibited bases apply to all programs.) Persons with disabilities who require alternative means for communication of program information (Braille, large print, audiotape, *etc.*) should contact USDA's TARGET Center at (202) 720–2600 (voice and TDD).

To file a complaint of discrimination, write to USDA, Director, Office of Adjudication and Compliance, 1400 Independence Avenue, SW., Washington, DC 20250–9410, or call (800) 795–3272 (voice) or (202) 720–6382 (TDD). USDA is an equal opportunity provider and employer.

Dated: April 21, 2010.

Curtis Wiley,

Acting Administrator, Rural Business—Cooperative Service.

[FR Doc. 2010–9820 Filed 4–27–10; 8:45 am]

BILLING CODE 3410–XY–P

DEPARTMENT OF AGRICULTURE

Agricultural Marketing Service

[Doc. No. AMS–FV–08–0073; FV–08–329]

United States Standards for Grades of Olive Oil and Olive-Pomace Oil

AGENCY: Agricultural Marketing Service, USDA.

ACTION: Notice.

SUMMARY: The Agricultural Marketing Service (AMS) of the Department of Agriculture (USDA) is revising the United States Standards for Grades of Olive Oil. This revision includes updated terms consistent with objective criteria for determining quality and purity among the grades of olive oil and olive-pomace oil commonly accepted in the United States and abroad. The revision will facilitate the marketing of olive oil and olive-pomace oil, employ terms consistent with the marketplace, provide definitions for olive oil and olive-pomace oil, promote truth in labeling, and provide a basis for enforcement by State and Federal agencies if these products are mislabeled.

DATES: *Effective Date:* October 25, 2010.

ADDRESSES: Copies of the revised U.S. Standards for Grades of Olive Oil and Olive-pomace oil are available from Processed Products Branch, Fruit and Vegetable Programs, Agricultural Marketing Service, U.S. Department of Agriculture, 1400 Independence Avenue, SW., Room 0709, South Building; STOP 0247, Washington, DC 20250 or on the Internet at *http://www.regulations.gov* or *http://www.ams.usda.gov/processedinspection*.

FOR FURTHER INFORMATION CONTACT: Chere L. Shorter, Inspection and Standardization Section, Processed Products Branch, Fruit and Vegetable Programs, Agricultural Marketing Service, U.S. Department of Agriculture, phone (202) 720–5021; or fax (202) 690–1527.

SUPPLEMENTARY INFORMATION: Section 203(c) of the Agricultural Marketing Act of 1946, as amended, directs and authorizes the Secretary of Agriculture "to develop and improve standards of quality, condition, quantity, grade, and packaging, and recommend and demonstrate such standards in order to encourage uniformity and consistency in commercial practices." AMS is committed to carrying out this authority in a manner that facilitates the marketing of agricultural commodities and makes copies of official standards available upon request. Those United States Standards for Grades of Fruits and Vegetables that no longer appear in the Code of Federal Regulations are maintained by USDA/AMS/Fruit and Vegetable Programs at *http://www.ams.usda.gov/processedinspection*.

AMS is revising the U.S. Standards for Grades of Olive Oil using the procedures that appear in part 36 of Title 7 of the Code of Federal Regulations (7 CFR part 36).

Background

AMS received a petition from the California Olive Oil Council (COOC), an association of domestic olive oil producers, requesting the revision of the United States Standards for Grades of

Olive Oil, to reflect current industry standards commonly accepted in the United States and abroad.

The revision replaces the first edition of the U.S. grade standards, effective since March 22, 1948 that used grades of "U.S. Grade A" or "U.S. Fancy," "U.S. Grade B" or "U.S. Choice," "U.S. Grade C" or "U.S. Standard," and "U.S. Grade D" or "Substandard," to denote levels of quality. These terms are not consistent with today's terminology for olive oil within the industry. The U.S. industry requested the revision because they wanted to create fairness in the marketplace. The COOC contend that because there is no definition for olive oil in the U.S., some unscrupulous blenders can produce low quality olive oil or olive-pomace oil and market it as extra virgin olive oil at a premium price.

The petitioners requested that the U.S. grade standards be revised to make them consistent with the International Olive Council (IOC) trade standards for olive and olive-pomace oil. The IOC develops standards of quality used by major olive oil producing countries, including Spain, Italy, Greece, Portugal, and Turkey. The IOC is an intergovernmental organization created by the United Nations that is headquartered in Madrid, Spain representing the marketing of over 95 percent of the world's olive oil production. The IOC is responsible for administering the International Agreement on Olive Oil. The United States is not a member of the IOC but has observer status. The COOC adheres, for the most part, to these international standards.

The petitioners originally requested that no value be provided for linolenic acid in the fatty acid profile pending the outcome of a review of the appropriate fatty acid limits for linolenic acid by the Codex Alimentarius Commission (CAC) but then agreed to set a limit for linolenic acid consistent with commercial practices in the domestic industry. The CAC is a United Nations organization through which member countries, including the United States, formulate and harmonize international food standards. To date, the CAC has not made a decision on the appropriate fatty acid limits for linolenic acid and leaves this limit to individual governments to decide.

AMS published a Notice in the November 8, 2004, **Federal Register** (69 FR 64713) with a thirty day comment period to determine the interest in revising the U.S. grade standards in response to the request by COOC.

Thirty commenters responded to the **Federal Register** notice. All of the comments are available on the AMS Web site located at *http://www.ams.usda.gov/processedinspection.* In general, the commenters agreed that there should be clearly defined quality ratings. Additionally, several commenters requested that USDA create an organoleptic sensory panel to perform organoleptic analyses and establish a laboratory or accredit one or more labs that would perform the analyses following IOC trade standards. AMS concluded that there was positive interest in revised U.S. grade standards for olive oil.

AMS then published a Notice in the June 2, 2008, **Federal Register** (73 FR 31426) with a sixty-day comment period to garner comments on its proposed U.S. grade standards. Twenty-six commenters responded to the **Federal Register** notice including producers, consumers, trade associations, government agencies, and representatives. Comments were received from the United States, Australia, Argentina, New Zealand, Portugal, Spain, and Tunisia. All of the comments are available on *http://www.regulations.gov.*

The proposed grade standards were largely based on the International Olive Oil (IOC) Standards. The IOC standards are recognized by the vast majority of the world's olive oil producers and marketers including the COOC. The International standards list nine grades of olive oil in two primary categories—(1) Olive Oil and (2) Olive-pomace oil.

The revised U.S. grade standards include the same requirements as the IOC standard except for the limits for linolenic acid and campesterol. These differences were requested by COOC and were listed in the proposed standards for comment. Also, the definition for "ordinary olive oil" was removed because of its limited recognition and unpalatability. For this reason, the revised U.S grade standards are limited to eight grades instead of nine. Linolenic acid is one of 13 fatty acids that are analyzed to determine the purity of the olive oil or olive-pomace oil. Campesterol is another component of olive oil and olive-pomace oil. The revised grade standards provide for slightly larger limits for both of these components to account for domestic variation from the IOC limits. The revised grade standards list 22 tests that are performed to assure that the olive oil meets the purity and quality requirements. The quality tests include organoleptic characteristics such as flavor, odor, color, free fatty acid content, peroxide value (denotes rancidity), and absorbance in ultra-violet (UV) light (denotes quality and degree of processing). The remaining tests are performed to ascertain if the product is of olive origin, to determine if the product was refined or unprocessed, or to meet other quality requirements. The virgin olive oil category, which includes extra virgin olive oil, is unprocessed. Olive oil and olive-pomace oil are processed and refined. The revised grade standards do not apply to olive oil blends, *i.e.,* olive oil mixed with herbs, spices, fruits, vegetables, or other oils.

The 22 tests include free fatty acid content, peroxide value, organoleptic criteria, absorbency in ultraviolet, fatty acid composition (including linolenic acid); trans fatty acid content; desmethylsterol composition, total sterol content (including campesterol); stigmastadiene content; saturated fatty acid content at the 2-position in triglycerides; sum of palmitic and stearic acids; percent fatty acids in the 2 position; maximum difference between actual and theoretical Equivalent Carbon Number (ECN) 42 triglyceride content; erythrodiol and uvaol content; wax content; food additive (alpha tocopherol); moisture and volatile matter; insoluble impurities; flash point; trace metals; unsaponifiable matter; heavy metal; pesticide residues; and halogenated solvents. The tests and their purpose are explained in more detail in the revised U.S. grade standards at *http://www.regulations.gov* or *http://www.ams.usda.gov/processedinspection.*

The comments can be summarized into one of the following categories: technical clarifications, testing limit tolerances, implementation of the grade standards, and editorial corrections (omissions, format, and spelling). With one exception, all of the comments were in support of the proposed U.S. grade standards and many recommendations were made.

Technical Clarifications

Several of the commenters noted that the IOC trade standard was revised in 2006. That revision changed the limits for stigmastadiene in virgin olive oil from 0.15 parts per million (ppm) to 0.10 ppm and 5.0 ppm in crude olive-pomace oil. The revised trade standard also substituted a method of analysis and limits for the saturated fatty acid content at the two-position in triglycerides. This test is used to determine if the oil has been re-esterified or if the oil was substituted with animal fat. This analysis was replaced by a more precise analysis, the content of 2-glyceryl monopalmitate and new limits for palmitic acid (a fatty

acid). Several commenters also noted that the test, "aspect (degree of cloudiness) at 20 degrees after 24 hours," for virgin olive oils could result in either a cloudy or clear product. The proposed grade standards incorrectly provided for a cloudy result. Some noted that the "absorbency in ultra-violet" test at K232 is an optional test in the IOC trade standard. Several noted that the proposed standards should include more objective terms for flavor in virgin olive oil and refined olive oil other than "good" and "excellent." One commenter wanted the grade standards to clearly state that olive-pomace oil must not be labeled as olive oil. The commenter also wanted the grade standards to clearly state that alpha-tocopherol, a naturally occurring component in olive oil removed during the refining process, is added back only to the refined oils. Several commenters noted that the peroxide value increases in the first stages of rancidity and drops off in later stages and suggested that a clarification be made in the definition section of the proposed grade standards. AMS recognizes the aforementioned recommendations as technically valid and revised the proposed grade standards accordingly.

The specifics of these and related comments and AMS responses are summarized below:

(1) *Comment: Section 52.1531 (a) Define or leave out the term "sound" as in sound fruit in the product description since olive oil is often pressed with slightly damaged olives.*

AMS agrees. Utilizing only sound olives for pressing olive oil implies that all of the olives must meet a certain minimum quality. This is not necessarily the case since the use of cull fruit is often utilized in the production of olive oil and is perfectly acceptable. This may be self limiting in that the use of damaged fruit results in a poor quality olive oil that would not meet the virgin category (highest quality) but could meet the other categories. The text is revised to read, "Olive oil is the oil obtained solely from wholesome fruit of the olive tree (*Olea europaea* L.), to the exclusion of oils obtained using solvents or re-esterification processes and of any mixture with oils of other kinds."

(2) *Comment: Section 52.1534. Olive oils are not graded solely on the basis of flavor and odor and free fatty acid content.*

AMS agrees. Olive oil is graded on a variety of characteristics which are listed in the revised grade standards. While this was provided for in the proposed grade standards, AMS has clarified the product descriptions for each category, referring to Tables I through III.

(3) *Comment: Section 52.1534 (a)–(d) and 52.1535. Flavor descriptors such as excellent, good, reasonably good, and poor are too subjective and should be linked with median scores.*

AMS disagrees that the descriptors are too subjective. In fact, median scores were listed where appropriate (i.e., the virgin category) in both the proposed and in these revised grade standards. The descriptors apply to olive oil and olive-pomace oil and in addition, the virgin category provides for median scores that have been linked with the descriptor. However, "reasonably good" has been changed to "acceptable" in this revision. These terms are consistent with other standards. Accordingly, no other changes are made as a result of this comment.

(4) *Comment: Section 52.1535 Change "may" to "must" to read, "Olive-pomace oil must or shall not be labeled as olive oil."*

AMS agrees. Olive oil and olive-pomace oils are considered two separate products and shall be labeled accordingly. The revised text will read, "Olive-pomace oils shall not be labeled as olive oil" to indicate that the names are not used interchangeably. This is consistent with Food and Drug Administration (FDA) labeling practices that appear in the Code of Federal Regulations (CFR) 21 CFR Section 101.3.

(5) *Comment: Section 52.1539, Aspect at 20 degrees after 24 hours. Extra virgin and virgin olive oils can be filtered and therefore limpid (clear) or unfiltered and be cloudy.*

AMS agrees. It was originally thought that cloudy olive oil held at a certain temperature indicated that the product was virgin oil and that this test would easily indicate this fact. Since this is not the case, the aspect test being of secondary importance was moved to Table III, making it an optional test and revised the definition in Section 52.1538 accordingly.

(6) *Comment: In section 52.1538, the term ECN always refers to ECN 42 and the definition must be "the triacylglycerols with equivalent carbon number 42." The table should indicate that ECN 42 is an absolute number.*

AMS agrees that ECN 42 is an absolute number since it is the difference between the two numbers, the actual Equivalent Carbon Number 42 (ECN 42) triacylglycerol content and the theoretical amount. Evaluation of these components is used for the detection of seed oils and verifies authenticity and origin of oils. No change to the standards is necessary as a result of this comment.

(7) *Comment: Section 52.1538 the definition for erythrodiol and uvaol should read " * * * two triterpenic dialcohols."*

AMS agrees that the definition should have been more specific. The proposed grade standards described these as alcohols. The text is changed to read "Two triterpenic dialcohol components found in olive oil and olive-pomace oil." The levels of these specific dialcohols differentiate oils that were pressed from oils that were produced by solvent extraction.

(8) *Comment: Section 52.1538, the term glyceridic structure definition describes only a monoglyceride.*

AMS agrees that the definition needs further clarification. Therefore, AMS is revising the text as follows: "The structure of esters (any class of organic compounds corresponding to an inorganic salt formed from an acid by replacement of the hydrogen by an alkyl radical) consisting of glycerol and fatty acids."

(9) *Comment: Section 52.1538 the fusty and muddy-sediment attributes have been combined in the revised method for organoleptic assessment of virgin olive oils. Putrid relates to the muddy-sediment defect rather than rancid flavor defect.*

AMS believes that the two defects fusty and muddy-sediment should be separate because these defects have two distinct attributes. Sediment often forms at the bottom of containers of virgin olive oil. This vegetable water can ferment and cause a defect in flavor, i.e., muddy or putrid. The putrid description for the rancid definition was removed. Rancid was described as varnish, paint, or seed-like odors. Fusty is a flavor defect attributable to poor storage conditions of the olives, usually promoting the bacterial growth of the *Clostridium* and *Pseudomonas genera* and smelling of decay, mildew, or mustiness. Appropriate changes to the text have been made as a result of this comment.

(10) *Comment: In Section 52.1538, the organoleptic definition should include odor characteristics on a continuous scale.*

AMS agrees in part. The proposed definition referred to flavor and odor as the typical flavor and odor of olive oil or olive-pomace oil produced from olives and the degree of positive attributes such as, but not limited to olive, apple, green, sweet, grass, nutty, tomato and some negative attributes, such as, but not limited to musty, fusty, winey-vinegary, muddy-sediment, and rancid. For virgin olive oil, these organoleptic characteristics are assessed on a continuous scale by a panel of tasters. However, rather than changing the definition of organoleptic as suggested by the commenter, AMS believes it is more appropriate to change the definition of flavor and odor. *Such changes to the text have been made as appropriate.*

(11) *Comment: In Section 52.1538, the definition for peroxide value needs to clarify that in the first stage of oxidation, peroxide values increase and in the second stage, peroxide values decrease even though the product is oxidized.*

AMS agrees that in the proposal, the definition did not explain the stages of oxidation. The revised definition makes this clarification to the text.

(12) *Comment: In Section 52.1538, the definition for 2-glyceryl monopalmitate content, add "re-esterified or animal fat has been added" as in the IOC trade standard.*

AMS agrees. The IOC and Codex trade standards were revised in 2006 and replaced the "saturated fatty acid content at the two position in the triglycerides" test with a more specific test called "2-glyceryl monopalmitate content determination." Therefore, the definition in the revised text will read, "This test is used to determine if the oil has been re-esterified by synthetic means or by addition of animal fat." Fats and oils are naturally occurring esters. An ester can be synthetically formed by the reaction between an acid and an alcohol. AMS also has made a corresponding change to Table II.

(13) *Comment: In Section 52.1538, trans fatty acids are produced not only during hydrogenation but also during refining if the temperature is high. The contents of trans-oleic, trans-linoleic, and trans-linolenic acid are related to the deodorization and de-coloring steps.*

AMS agrees and has revised the definition for trans-fatty acids. The revised text now states, "When oil is partially hydrogenated or refined, trans conformation refers to which side of the fatty acid double bond the hydrogen is on. The trans conformation refers to hydrogen found on opposite sides of the double bond. Olive oil in its natural state is not a *trans* fatty acid because it has not been partially hydrogenated or refined. This test is used to determine if any processing has taken place such as, deodorization or de-coloring."

(14) *Comment: In Section 52.1539 (Table I) Color. Color is not related to oil quality so what is the point of including this in the grading? An objective method for determining color such as the Association of Official Analytical Chemists method is suggested.*

AMS believes that even though color is not part of the grade, it provides information on the product and should remain in the grade standard. AMS added descriptions for the virgin olive oil category for consistency since the IOC trade standard provides color descriptions for olive oil and olive-pomace oil. The typical color of olive oil varies from light yellow to green. Olive-pomace oil may vary from light yellow to light green, brownish yellow, dark green, brown or black (for crude olive-pomace oil). The color will be evaluated as either normal or off color. Accordingly, AMS believes there is no need to make changes to this section.

(15) *Comment: The stigmastadiene current limit in the IOC trade standard revised in 2006 is 0.10 mg/kg for extra virgin olive oils. The limit for crude olive oil should be 5.0 mg/kg. The limits for refined olive oil, olive oil and olive-pomace oil are not necessary because this measurement determines the degree of refining.*

AMS agrees and has made corresponding changes in the Table because the stigmastadiene limits were revised in both the IOC and Codex standards in 2006. The stigmastadiene test was moved from Table II to Table I. This test will be a required test for all lots submitted to AMS because it aids in detecting whether the oil has been refined and or mixed with refined oil.

(16) *Comment: The limit for alpha-tocopherol of zero in extra virgin and virgin olive oils is not correct because these contain naturally occurring alpha-tocopherol which is removed during the refining process of producing olive-pomace oil.*

AMS agrees. Alpha-tocopherol is naturally occurring in olive oil but is removed during processing and added back to refined olive oil and olive-pomace oil at a limit of 200 mg/kg. Accordingly, the table will be revised to note "Not applicable" for unrefined oils. This test is only necessary to assure that the limits have not been exceeded in refined oils.

(17) *Comment: List K232 as an optional item due to varying levels and lack of importance.*

AMS agrees and has addressed this suggestion in a footnote in Table I. This provision is not in the Codex standard but is mentioned in the IOC trade standard. The IOC trade standard indicates that this determination is solely for application by commercial partners on an optional basis. The new footnote indicates that this test is optional.

Tolerances for Linolenic Acid and Campesterol

Several commenters noted that campesterol (one of several sterols found in olive oil) and limits for linolenic acid needed to conform to the IOC trade standard. Sterol analysis is used to detect the presence of seed oils. Sterols are one of many minor constituents of oils that are characteristic indicators of impurity of the olive oil. While some supported this difference, others were not in agreement. The reasons for AMS not making changes to the revised text as a result of these comments are detailed below.

(18) *Comment: Section 52.1539 (Table I), the IOC limit for the linolenic acid value is 1.0 percent. The IOC limit for campesterol is 4.0 percent. A larger value can indicate the addition of seed oils or refined oils (like corn, soy, canola, or cottonseed).*

AMS believes that the values for linolenic and campesterol are based on historical data originating from the Mediterranean region. Australia, Argentina, Israel, New Zealand and other countries pointed out that their olive oil was not considered when these limits were established. It is important to note that the use of the U.S. grade standards is voluntary. Further, the proposed parameters for linolenic acid and campesterol are slightly more liberal than the IOC standard, i.e., a broader range of olive oil (including U.S. production) falls within the proposed standards. As a result, more products can be addressed under the proposed standards. For this reason, the maximum value for the parameter was set according to what the United States typically produces, which is up to 1.5 percent for linolenic acid. Under the revised U.S. grade standards, linolenic acid values between 1.0 and 1.5 percent and campesterol values between 4.0 and 4.5 percent would be subject to further testing when the product is officially certified by AMS. These additional tests are outlined in Table II of the revised U.S. grade standards. Values higher than 1.5 percent and 4.5 percent respectively would not meet the standards for olive oil or olive-pomace oil. The California Olive Oil Council (COOC) supported this approach because it is compatible with domestic suppliers who occasionally produce olive oil with linolenic acid or campesterol values slightly higher than the IOC standards would allow. While the U.S. produces only extra virgin olive oil, it is estimated that only one percent of the olive oil produced in the U.S would fall above the IOC limits for linolenic acid. AMS believes that this approach is reasonable and appropriate. According to the COOC, these higher values are attributable to growing conditions. Higher values for linolenic acid are also found in olive oil made from olives grown in Australia, South America, North Africa, and parts of Europe.

Also, variation in campesterol levels has been reported in literature.[1] *The sterol and alcohol composition of Cornicabra virgin olive oil during the crop seasons from 1997/1998 to 2001/2002 were reported. The median value of campesterol was 4.0 percent and ranged from 3.4 to 4.5 percent in the five crop seasons studied; indicating that high natural content is a peculiar characteristic of the Cornicabra virgin olive oil. Cornicabra is a variety of olive. The limit for linolenic acid has not yet been established in the Codex standard to this date. In both cases olive oil or olive-pomace oil found to show limits between 1.0 and 1.5 percent (linolenic acid) and 4.0 and 4.5 percent (campesterol) will require the additional verification testing listed in Table II of the revised U.S. grade standards. Accordingly, no changes to the standards are made as a result of these comments.*

Implementation

Several commenters noted that all of the tests were considered mandatory in the IOC standard and all should be included in Table I. While this may be appropriate for the IOC standard, AMS continues to believe that it is more appropriate for the U.S. standards that tests be divided into categories and that the number of mandatory tests be limited. The AMS grade standards traditionally emphasize organoleptic characteristics. AMS performs grading services on a lot by lot basis. A lot is defined as any number of containers of the same size, type, and style located in the same warehouse or conveyance. A lot can also be described as being produced during a period or shift lasting up to 24 hours. In both cases the lot must be available for inspection at one time. The fees to perform all 22 analytical tests on every lot would be cost prohibitive (over $7,000 per lot). Unlike the IOC standards, more than one sample is tested per lot. However, this does not prevent an applicant from requesting that additional tests be done to meet an international standard or other specification. The grade standards represent a minimum requirement to meet U.S. grades so that an applicant can use USDA grade marks on its label. A certificate is a written report that shows the pertinent facts concerning the quality, grade, and condition of the product, and may include useful descriptive information about the product and the containers in which it is packed.

The revised U.S. grade standards divide tests into three categories: Mandatory (Table I), Confirmatory (Table II), and Optional (Table III). The

[1] Rivera del Álamo, R. M., Fregapane, G., Aranda, F., Gómez-Alonso, S., Salvador, M. D., *Sterol And Alcohol Composition Of Cornicabra Virgin Olive Oil: The Campesterol Content Exceeds The Upper Limit Of 4% Established By EU Regulations,* Food Chemistry, (Vol. 84) (No. 4), (Orlando, Florida: Elsevier, 2004) 533–537, *http://www.cababstractsplus.org/google/abstract.asp?AcNo=20033202838.*

mandatory tests shall be performed on all lots of olive oil and olive-pomace oil. These are listed in Table I and include flavor and odor, color, free fatty acid expressed as oleic acid, peroxide value, absorbency in ultraviolet (UV), fatty acid composition, trans fatty acid content, desmethylsterol composition, total sterol, and stigmastadiene content. Table II lists the tests for purity: Maximum difference between actual and theoretical ECN 42 triacylglycerol content; erythrodiol and uvaol; waxes; and 2-glyceryl monopalmitate content. Table III lists tests to be used if one wants additional information on other characteristics of the oil. These include moisture and volatile matter, insoluble impurities, flash point, heavy metals, unsaponifiable matter, aspect at 20 degrees Celsius after 24 hours, pesticide residues, and halogenated solvents. Some of these tests are monitored by FDA (*i.e.,* heavy metals, pesticide residues and halogenated solvents.)

In addition, one commenter did not agree with the "U.S." term preceding the grade terms (*e.g.,* "U.S. Extra Virgin Olive Oil"). One commenter suggested that a traditional method using the pressing ratio (weight of the olives versus weight of the resultant oil) be used instead. One commenter wanted to specify the amount of virgin olive oil added to refined oil to produce olive oil. And finally, one commenter was not in support of the proposed grade standards because he felt that the IOC trade standard was unreliable and would have negative implications on "New World" olive oil producers. All of these comments are discussed below.

(19) *Comment: Sterol composition, maximum difference between actual and theoretical ECN42, erythrodiol, and waxes tests should be mandatory.*

AMS agrees in part and moved some of the corresponding analyses to Table I, making them mandatory. These include total sterols, stigmastadiene, and desmethylsterol composition because these tests detect specific properties of the oil that determines its purity and are not covered by other tests in Table I.

The ECN42 analysis was not included in Table I because this test detects seed oils. Detection of seed oils is covered by other analyses already listed in Table I, namely desmethylsterol composition, fatty acid composition, and stigmastadiene content. Erythrodiol, uvaol, and wax content analyses detect the presence of pomace oil and oils produced from solvent extraction. These analyses are already covered by other tests that are listed in Table I, namely, stigmastadiene content and absorbance in ultraviolet. However, ECN42, erythrodiol and uvaol, waxes, content of 2-glyceryl monopalmitate are included in Table II. The tests listed in Table II will apply if analytical results do not comply with label declaration for the purity criteria listed in Table I, in the following cases: (1) If linolenic acid values are between 1.0 and 1.5 percent, (2) if the campesterol values are between 4.0 and 4.5 percent, or (3) at the applicant's request.

(20) *Comment: The names should comply with the IOC trade standards and Codex standards without the "U.S." term preceding the name.*

The names of the grades are preceded by the term "U.S." only if the product has been officially sampled and graded by AMS. Accordingly, use of the term "U.S." is necessary and appropriate because it is used in conjunction with an official grade statement, or certificate, and can be used on labels, if an applicant desires to indicate that the product has been officially graded by USDA. Products would not be required to be labeled differently. No change was made as a result of this comment.

Comment: The olive oil pressing ratio (weight of olives to weight of olive oil yielded) is the traditional method for judging the quality of the olive oil. Below 20 percent is considered olive-pomace oil.

AMS disagrees that the pressing method is an appropriate method to include in the U.S. grade standards. The yield of olive oil depends on many complex factors besides the press ratio. These factors include the variety of olives, the pressing method used, ripeness, and moisture. The revised standards establish analytical and organoleptic methods for determining conformance with the various grade requirements regardless of the age, moisture, processing method, or variety of the in-going olives.

(21) *Comment: The IOC chemical markers represent a low minimum standard and that there would be negative implications on the burgeoning olive oil industries of California, Arizona, Texas, Australia, New Zealand, Chile, and Argentina. USDA should adopt a few chemical tests that are easily monitored in lieu of the proposed standard.*

AMS believes that the revised grade standards would allow applicants assurance of product quality through inspection and testing using objective chemical and organoleptic testing. Applicants of the AMS inspection services could demonstrate that their product has been officially graded by using the official USDA marks on their packaging or other materials. This would help consumers and buyers differentiate between the various grades and better reflect the value of their purchases. The U.S. grade standards establish terms that can objectively define product quality and help ensure that consumers receive what they expect when they purchase certain food products.

There were additional comments or clarifications requested by some commenters on the implementation of the grade standards as discussed below.

(22) *Comment: Will the tests be performed in a timely manner?*

AMS will use the AMS Science and Technology Laboratory in Blakely, Georgia for both the analytical and organoleptic testing. Sample results will be available in a timely manner.

(23) *Comment: What assurances are there of the quality of the tasters?*

AMS will follow the procedures set forth in the COI/T.20/Doc. No. 15, "Organoleptic assessment of virgin olive oil," as listed in the standards. A panel of AMS tasters will be trained by IOC qualified trainers. In addition to the flavor panel, sample results would be monitored regularly through a systematic review process where samples are sent to a designated AMS office for evaluation and concurrence with previous results.

(24) *Comment: AMS should consider providing median terms for refined olive oil.*

Under the IOC trade standards and the Codex standards, only the virgin olive oils are subject to organoleptic assessment through a flavor panel. Therefore, median scores are not applicable for refined olive oil products or for any of the olive-pomace oils. However, AMS will flavor these oils. The revised grade standards require that refined oils have at least acceptable flavor.

(25) *Comment: AMS should specify a minimum quantity of virgin olive oil added to refined olive oil for olive oil which is a blend of the two.*

Neither the IOC trade standard nor the Codex standard defines the amount of virgin olive oil blended with refined olive oil to produce olive oil. Such a proposal would require additional research and accordingly is not included in the revised standards.

(26) *Comment: The sample unit of 375 ml is too much; 250 ml should be sufficient to perform the tests.*

AMS disagrees. AMS believes that the flavor panel review alone requires 15–20 milliliters (ml) per person or 240 ml for a twelve-person flavor panel. However, this does not include an additional amount required for analytical testing. Therefore, after further review 500 ml is determined to be needed to properly retest a sample for any reason.

Editorial Comments

AMS agreed with many of the following suggestions and comments as having merit. The following reflects such suggestions and comments.

(27) *Comment: Section 52.1538 Definition should read "Desmethylsterol" not "Dimethylsterol".*

AMS agrees and corrected the typographical error.

(28) *Comment: "Ordinary olive" oil was removed from the standard but reference is made to it in Section 52.1542 and should be removed.*

AMS agrees and removed references to ordinary olive oil from the section because ordinary olive oil is not a part of the standard. This product was an olive oil of lower quality than virgin olive oil but of slightly better quality than lampante oil. AMS decided in the proposed grade standards that because this product is not often used in trade, is considered fairly unpalatable, that it would be considered as lampante oil and removed from the grade standards.

(29) *Comment: Moisture and insoluble impurities for lampante olive oil are not defined in the IOC trade standard or Codex standard because the product will be refined.*

AMS agrees that the IOC and Codex standards do not set limits for moisture or

insoluble impurities for lampante oil. Because this was an oversight, Table III is revised to show that these analyses are "Not Applicable" for "moisture and volatile matter" and "insoluble impurities in light petroleum."

(30) *Comment:* A method of analysis for preparation of methyl esters should accompany the methods of analysis for fatty acid composition.

AMS agrees and added the suggested method to the list of methods of analysis. AMS also found that pesticide residue tests were included in the revised 2006 IOC trade standards so this test was added to the U.S. grade standards.

(31) *Comment: For future consideration:*

i. *Consider defining limits for premium extra virgin olive oil.*

ii. *Set new limits for fatty acid composition, desmethylsterol, total sterol, saturated fatty acid in the two position in triglycerides and unsaponifiable matter.*

iii. *Set stricter limits for free fatty acid as oleic, peroxide value, absorbency in UV.*

iv. *Research future analysis for inclusion in the standard.*

AMS continually reviews its grade standards. AMS facilitates the fair and efficient marketing of agricultural products by promulgating voluntary official grade standards. AMS develops, revises, suspends, or terminates the official grade standards under procedures that allow for input by interested parties. As new science becomes available or the IOC and Codex standards are revised, AMS will consider updating the grade standards as appropriate.

AMS believes that the revised grade standards would facilitate the marketing of olive oil and olive-pomace oil, better reflect terms that are currently in use in the marketplace, provide definitions for olive oil and olive-pomace oil, promote truth in labeling, and provide a basis for enforcement by State and Federal agencies if these products are mislabeled.

The official grades of olive oil and olive-pomace oil in these standards are covered by the procedures set forth in the Regulations Governing the Inspection and Certification for Processed Fruits and Vegetables, Processed Products Thereof and Certain Other Processed Food Products (7 CFR 52.1–52.83).

The revised U.S. Standards for Grades of Olive Oil and Olive-Pomace Oil will become effective 180 days after publication of this notice in the **Federal Register** to allow sufficient time to implement the standards.

Authority: 7 U.S.C. 1621–1627.

Dated: April 22, 2010.

David R. Shipman,

Acting Administrator, Agricultural Marketing Service.

[FR Doc. 2010–9866 Filed 4–27–10; 8:45 am]

BILLING CODE 3410–02–P

DEPARTMENT OF COMMERCE

National Oceanic and Atmospheric Administration

Proposed Information Collection; Comment Request; Management and Oversight of the National Estuarine Research Reserve System

AGENCY: National Oceanic and Atmospheric Administration (NOAA), Commerce.

ACTION: Notice.

SUMMARY: The Department of Commerce, as part of its continuing effort to reduce paperwork and respondent burden, invites the general public and other Federal agencies to take this opportunity to comment on proposed and/or continuing information collections, as required by the Paperwork Reduction Act of 1995.

DATES: Written comments must be submitted on or before June 28, 2010.

ADDRESSES: Direct all written comments to Diana Hynek, Departmental Paperwork Clearance Officer, Department of Commerce, Room 6625, 14th and Constitution Avenue, NW., Washington, DC 20230 (or via the Internet at *dHynek@doc.gov).*

FOR FURTHER INFORMATION CONTACT: Requests for additional information or copies of the information collection instrument and instructions should be directed to Erica Seiden, (301) 563–1172 or *Erica.Seiden@noaa.gov.*

SUPPLEMENTARY INFORMATION:

I. Abstract

The Coastal Zone Management Act of 1972 (CZMA; 16 U.S.C. 1461 *et seq.*) provides for the designation of estuarine research reserves representative of various regions and estuarine types in the United States to provide opportunities for long-term research, education and interpretation. During the site selection and designation process, information is collected from states in order to prepare a management plan and environmental impact statement. Designated reserves apply annually for operations funds by submitting a work plan; subsequently progress reports are required every six months for the duration of the award. Each reserve compiles an ecological characterization or site profile to describe the biological and physical environment of the reserve, research to date and research gaps. A competitive research program provides an opportunity for two researchers to focus their work at each reserve. The reserves are evaluated every three years, per section 312 of the Act, and revise their management plans every five years. This information is required to ensure that reserves are adhering to regulations and that the purpose for which they were designated is maintained.

II. Method of Collection

Respondents have a choice of either electronic or paper submissions. Methods of submittal include e-mail of electronic forms, and mail or facsimile transmission of paper forms.

III. Data

OMB Control Number: 0648–0121.

Form Number: None.

Type of Review: Regular submission.

Affected Public: Non-profit institutions; State, local, or tribal government.

Estimated Number of Respondents: 85.

Estimated Time per Response: Management Plan, 1,800 hours; Site Profile, 1,800 hours; Award application, 8 hours; Award reports, 5 hours; Designations, 2,000 hours; NEPA documentation, 40 hours.

Estimated Total Annual Burden Hours: 14,370.

Estimated Total Annual Cost to Public: $2,000 in recordkeeping/reporting costs.

IV. Request for Comments

Comments are invited on: (a) Whether the proposed collection of information is necessary for the proper performance of the functions of the agency, including whether the information shall have practical utility; (b) the accuracy of the agency's estimate of the burden (including hours and cost) of the proposed collection of information; (c) ways to enhance the quality, utility, and clarity of the information to be collected; and (d) ways to minimize the burden of the collection of information on respondents, including through the use of automated collection techniques or other forms of information technology.

Comments submitted in response to this notice will be summarized and/or included in the request for OMB approval of this information collection; they also will become a matter of public record.

Dated: April 22, 2010.

Gwellnar Banks,

Management Analyst, Office of the Chief Information Officer.

[FR Doc. 2010–9769 Filed 4–27–10; 8:45 am]

BILLING CODE 3510–08–P

DEPARTMENT OF COMMERCE

International Trade Administration

[A–337–804, A–533–813, A–560–802, A–570–851]

Certain Preserved Mushrooms From Chile, India, Indonesia, and the People's Republic of China: Notice of Continuation of Antidumping Duty Orders

AGENCY: Import Administration, International Trade Administration, Department of Commerce.

SUMMARY: As a result of the determinations by the Department of Commerce (the Department) and the International Trade Commission (ITC) that revocation of the antidumping duty orders on certain preserved mushrooms (mushrooms) from Chile, India, Indonesia, and the People's Republic of China (PRC) would be likely to lead to continuation or recurrence of dumping and of material injury to an industry in the United States within a reasonably foreseeable time, the Department is publishing notice of the continuation of these antidumping duty orders.

DATES: *Effective Date:* April 28, 2010.

FOR FURTHER INFORMATION CONTACT: Kate Johnson or Brandon Farlander, AD/CVD Operations, Import Administration, International Trade Administration, U.S. Department of Commerce, 14th Street & Constitution Avenue, NW., Washington, DC 20230; telephone: (202) 482–4929 or (202) 482–0182, respectively.

SUPPLEMENTARY INFORMATION:

Background

On October 1, 2009, the Department initiated and the ITC instituted sunset reviews of the antidumping duty orders on mushrooms from Chile, India, Indonesia, and the PRC, pursuant to section 751(c) of the Tariff Act of 1930, as amended (the Act). *See also Notice of Antidumping Duty Order: Certain Preserved Mushrooms from Chile,* 63 FR 66529 (December 2, 1998); *Notice of Amendment of Final Determination of Sales at Less Than Fair Value and Antidumping Duty Order: Certain Preserved Mushrooms from India,* 64 FR 8311 (February 19, 1999); *Notice of Antidumping Duty Order: Certain Preserved Mushrooms from Indonesia,* 64 FR 8310 (February 19, 1999); and *Notice of Amendment of Final Determination of Sales at Less Than Fair Value and Antidumping Duty Order: Certain Preserved Mushrooms from the People's Republic of China,* 64 FR 8308 (February 19, 1999).

The Department conducted expedited sunset reviews of these orders. As a result of its review, the Department found that revocation of the antidumping duty orders would be likely to lead to continuation or recurrence of dumping and notified the ITC of the magnitude of the margins likely to prevail were the orders to be revoked. *See Certain Preserved Mushrooms from Chile, India, Indonesia and the People's Republic of China: Final Results of the Expedited Sunset Reviews of the Antidumping Duty Orders,* 74 FR 67170 (December 18, 2009) (*Final Results*).

On April 15, 2010, the ITC published its determination pursuant to section 751(c) of the Act, that revocation of the antidumping duty orders on mushrooms from Chile, India, Indonesia, and the PRC would be likely to lead to continuation or recurrence of material injury to an industry in the United States within a reasonably foreseeable time. *See Preserved Mushrooms from Chile, China, India, and Indonesia; Determinations,* 75 FR 19658 (April 15, 2010).

Scope of the Finding

The products covered under the mushrooms orders are imported whole, sliced, diced, or as stems and pieces. The "preserved mushrooms" covered under the orders are the species *Agaricus bisporus* and *Agaricus bitorquis.* "Preserved mushrooms" refer to mushrooms that have been prepared or preserved by cleaning, blanching, and sometimes slicing or cutting. These mushrooms are then packed and heated in containers, including but not limited to cans or glass jars in a suitable liquid medium, including but not limited to water, brine, butter or butter sauce. Included within the scope of these orders are "brined" mushrooms, which are presalted and packed in a heavy salt solution to provisionally preserve them for further processing. Also included within the scope of these orders, as of June 19, 2000, are marinated, acidified, or pickled mushrooms containing less than 0.5 percent acetic acid.

Excluded from the scope of these orders are the following: (1) All other species of mushroom, including straw mushrooms; (2) all fresh and chilled mushrooms, including "refrigerated" or "quick blanched mushrooms"; (3) dried mushrooms; and (4) frozen mushrooms. The merchandise subject to these orders was previously classifiable under subheadings 2003.10.0027, 2003.10.0031, 2003.10.0037, 2003.10.0043, 2003.10.0047, 2003.10.0053, and 0711.90.4000 of the Harmonized Tariff Schedule of the United States ("HTSUS"). Although the HTSUS subheadings are provided for convenience and customs purposes, the written description of the scope of these orders is dispositive. As of January 1, 2002, the HTSUS subheadings are as follows: 2003.10.0127, 2003.10.0131, 2003.10.0137, 2003.10.0143, 2003.10.0147, 2003.10.0153, 0711.51.0000.

Continuation of the Finding

As a result of the determinations by the Department and the ITC that revocation of the antidumping duty orders would be likely to lead to continuation or recurrence of dumping and material injury to an industry in the United States, pursuant to section 751(d)(2) of the Act, the Department hereby orders the continuation of the antidumping duty orders on mushrooms from Chile, India, Indonesia, and the PRC.

U.S. Customs and Border Protection will continue to collect antidumping duty cash deposits at the rates in effect at the time of entry for all imports of subject merchandise.

The effective date of continuation of these orders will be the date of publication in the **Federal Register** of this Notice of Continuation. Pursuant to section 751(c)(2) of the Act, the Department intends to initiate the next five-year review of this finding not later than March 2015.

These five-year (sunset) reviews and this notice are in accordance with sections 751(c) and 777(i)(1) of the Act and 19 CFR 351.218(f)(4).

Dated: April 16, 2010.

Ronald K. Lorentzen,

Deputy Assistant Secretary for Import Administration.

[FR Doc. 2010–9864 Filed 4–27–10; 8:45 am]

BILLING CODE 3510–DS–P

DEPARTMENT OF COMMERCE

International Trade Administration

[A–570–891]

Hand Trucks and Certain Parts Thereof from the People's Republic of China: Continuation of the Antidumping Duty Order

AGENCY: Import Administration, International Trade Administration, Department of Commerce.

EFFECTIVE DATE: April 28, 2010.

SUMMARY: As a result of the determinations by the Department of Commerce (the Department) and the International Trade Commission (the Commission) that revocation of the

antidumping duty order on hand trucks and certain parts thereof (hand trucks) from the People's Republic of China (PRC) would likely lead to a continuation or recurrence of dumping and material injury to an industry in the United States, the Department is publishing a notice of continuation of the antidumping duty order.

FOR FURTHER INFORMATION CONTACT: Mark Flessner or Robert James, AD/CVD Operations Office 7, Import Administration, International Trade Administration, U.S. Department of Commerce, 14th Street & Constitution Avenue, NW, Washington, DC 20230; telephone: (202) 482–6312 or (202) 482–0649, respectively.

SUPPLEMENTARY INFORMATION:

Background

On November 2, 2009, the Department initiated a sunset review of the antidumping duty order on hand trucks from the PRC pursuant to section 751(c) of the Tariff Act of 1930, as amended (the Tariff Act). *See Initiation of Five–Year ("Sunset") Reviews*, 74 FR 56593 (November 2, 2009).

As a result of its review, the Department determined that revocation of the antidumping duty order on hand trucks from the PRC would likely lead to a continuation or recurrence of dumping and, therefore, notified the Commission of the magnitude of the margins likely to prevail should the order be revoked. *See Hand Trucks and Certain Parts Thereof from the People's Republic of China: Final Results of Expedited Five–year (Sunset) Review of Antidumping Duty Order*, 75 FR 11120 (March 10, 2010).

On March 31, 2010, the Commission determined, pursuant to section 751(c) of the Tariff Act, that revocation of the antidumping duty order on hand trucks from the PRC would likely lead to a continuation or recurrence of material injury to an industry in the United States within the reasonably foreseeable future. *See* USITC Publication 4138 (April 2010), and *Hand Trucks and Certain Parts Thereof from the People's Republic of China*, 75 FR 20862 (April 21, 2010).

Scope of the Order

The merchandise subject to this antidumping duty order consists of hand trucks manufactured from any material, whether assembled or unassembled, complete or incomplete, suitable for any use, and certain parts thereof, namely the vertical frame, the handling area and the projecting edges or toe plate, and any combination thereof.

A complete or fully assembled hand truck is a hand–propelled barrow consisting of a vertically disposed frame having a handle or more than one handle at or near the upper section of the vertical frame; at least two wheels at or near the lower section of the vertical frame; and a horizontal projecting edge or edges, or toe plate, perpendicular or angled to the vertical frame, at or near the lower section of the vertical frame. The projecting edge or edges, or toe plate, slides under a load for purposes of lifting and/or moving the load.

That the vertical frame can be converted from a vertical setting to a horizontal setting, then operated in that horizontal setting as a platform, is not a basis for exclusion of the hand truck from the scope of this order. That the vertical frame, handling area, wheels, projecting edges or other parts of the hand truck can be collapsed or folded is not a basis for exclusion of the hand truck from the scope of the order. That other wheels may be connected to the vertical frame, handling area, projecting edges, or other parts of the hand truck, in addition to the two or more wheels located at or near the lower section of the vertical frame, is not a basis for exclusion of the hand truck from the scope of the order. Finally, that the hand truck may exhibit physical characteristics in addition to the vertical frame, the handling area, the projecting edges or toe plate, and the two wheels at or near the lower section of the vertical frame, is not a basis for exclusion of the hand truck from the scope of the order.

Examples of names commonly used to reference hand trucks are hand truck, convertible hand truck, appliance hand truck, cylinder hand truck, bag truck, dolly, or hand trolley. They are typically imported under heading 8716.80.50.10 of the Harmonized Tariff Schedule of the United States (HTSUS), although they may also be imported under heading 8716.80.50.90. Specific parts of a hand truck, namely the vertical frame, the handling area and the projecting edges or toe plate, or any combination thereof, are typically imported under heading 8716.90.50.60 of the HTSUS. Although the HTSUS subheadings are provided for convenience and customs purposes, the Department's written description of the scope is dispositive.

Excluded from the scope are small two–wheel or four–wheel utility carts specifically designed for carrying loads like personal bags or luggage in which the frame is made from telescoping tubular materials measuring less than 5/8 inch in diameter; hand trucks that use motorized operations either to move the hand truck from one location to the next or to assist in the lifting of items placed on the hand truck; vertical carriers designed specifically to transport golf bags; and wheels and tires used in the manufacture of hand trucks. The written description remains dispositive.

Continuation of the Order

As a result of these determinations by the Department and the Commission that revocation of the antidumping duty order on hand trucks would likely lead to a continuation or recurrence of dumping and material injury to an industry in the United States, pursuant to section 751(d)(2) of the Tariff Act, the Department hereby orders the continuation of the antidumping order on hand trucks from the PRC. United States Customs and Border Protection will continue to collect antidumping duty cash deposits at the rates in effect at the time of entry for all imports of subject merchandise. The effective date of the continuation of the order will be the date of publication in the **Federal Register** of this notice of continuation.

Pursuant to section 751(c)(2) of the Tariff Act, the Department intends to initiate the next five–year review of the order not later than 30 days prior to the fifth anniversary of the effective date of continuation.

This five–year (sunset) review and this notice are in accordance with section 751(c) of the Tariff Act and published pursuant to section 777(i)(1) of the Tariff Act.

Dated: April 22,2010.

Ronald K. Lorentzen,

Deputy Assistant Secretary for Import Administration.

[FR Doc. 2010–10012 Filed 4–27–10; 8:45 am]

BILLING CODE 3510–DS–S

DEPARTMENT OF COMMERCE

International Trade Administration

[A–351–838, A–331–802, A–533–840, A–570–893, A–549–822, A–552–802]

Certain Frozen Warmwater Shrimp From Brazil, Ecuador, India, the People's Republic of China, Thailand, and the Socialist Republic of Vietnam: Notice of Court Decision Not in Harmony With the Final Determinations and Amended Final Determinations of the Antidumping Duty Investigations

AGENCY: Import Administration, International Trade Administration, Department of Commerce.

SUMMARY: On April 14, 2010, the United States Court of International Trade ("CIT") sustained the remand

redetermination issued by the Department of Commerce ("Department") pursuant to the CIT's remand order in the final and amended final determinations of the antidumping duty investigations of certain frozen warmwater shrimp from Brazil, Ecuador, India, the People's Republic of China, Thailand, and the Socialist Republic of Vietnam. *See Ad Hoc Shrimp Trade Action Committee, Versaggi Shrimp Corporation, and Indian Ridge Shrimp Company* v. *United States,* Slip Op. 10–39 (CIT 2010) (*Ad Hoc IV*). This case arises out of the Department's final determinations [1] and amended final determinations [2] in the original investigations. Consistent with the decision of the United States Court of Appeals for the Federal Circuit ("Federal Circuit") in *Timken Co.* v. *United States,* 893 F.2d 337 (Fed. Cir. 1990) (*Timken*), the Department is notifying the public that *Ad Hoc IV* is not in harmony with the *Shrimp AD Final Determinations* and *Shrimp AD Amended Finals and Orders.*

DATES: *Effective Date:* April 28, 2010.

FOR FURTHER INFORMATION CONTACT: Matthew Renkey, AD/CVD Operations, Office 9, Import Administration, International Trade Administration, U.S. Department of Commerce, 14th Street and Constitution Ave., NW., Washington, DC 20230; telephone: (202) 482–2312.

SUPPLEMENTARY INFORMATION:

On July 1, 2009, the CIT remanded to the Department its decision to exclude dusted shrimp from the scope of the investigations, stating that the Department's decision was unsupported by adequate reasoning and therefore contrary to law. *See Ad Hoc Shrimp Trade Action Committee, Versaggi Shrimp Corporation, and Indian Ridge Shrimp Company* v. *United States,* Slip Op. 09–69 (CIT 2009) (*Remand Opinion and Order*). Pursuant to the CIT's remand instructions, the Department re-examined record evidence and considered whether dusted shrimp should be within the scope of the investigations.

The Department released the *Draft Results of Redetermination Pursuant to Court Remand* (*Draft Redetermination*) to the interested parties for comment on September 22, 2009. After receiving and considering the comments from interested parties, on October 29, 2009, the Department filed its final results of redetermination pursuant to the *Remand Opinion and Order* with the CIT. *See Final Results of Redetermination Pursuant to Court Remand,* Court No. 05–00192, (October 29, 2009) (*Final Redetermination*), found at *http://ia.ita.doc.gov/remands/09-69.pdf.* In the remand redetermination, the Department determined that dusted shrimp should properly be included within the scope of the *Shrimp AD Final Determinations* and *Shrimp AD Amended Finals and Orders.*[3] On April 14, 2010, the CIT affirmed all aspects of the Department's remand redetermination.

In its decision in *Timken,* 893 F.2d at 341, the Federal Circuit held that, pursuant to section 516A(e) of the Tariff Act of 1930, as amended ("Act"), the Department must publish a notice of a court decision that is not "in harmony" with a Department determination, and must suspend liquidation of entries pending a "conclusive" court decision. As a result of the Department's finding that dusted shrimp should properly be included within the scope of the *Shrimp AD Final Determinations* and *Shrimp AD Amended Finals and Orders,* the CIT's decision in this case on April 14, 2010, constitutes a final decision of that court that is not in harmony with the Department's final and amended final determinations of the original investigations. This notice is published in fulfillment of the publication requirements of *Timken.* Accordingly, the Department will continue the suspension of liquidation of the subject merchandise pending the expiration of the period of appeal or, if appealed, pending a final and conclusive court decision. In the event the CIT's ruling is not appealed or, if appealed, upheld by the Federal Circuit, the Department will instruct U.S. Customs and Border Protection to collect cash deposits for entries of dusted shrimp.

This notice is issued and published in accordance with section 516A(c)(1) of the Act.

Dated: April 22, 2010.

Ronald K. Lorentzen,

Deputy Assistant Secretary for Import Administration.

[FR Doc. 2010–10009 Filed 4–27–10; 8:45 am]

BILLING CODE 3510–DS–P

[1] *See Notice of Final Determination of Sales at Less Than Fair Value: Certain Frozen and Canned Warmwater Shrimp From Brazil,* 69 FR 76910 (December 23, 2004) (*Brazil Final Determination*); *Notice of Final Determination of Sales at Less Than Fair Value: Certain Frozen and Canned Warmwater Shrimp From Ecuador,* 69 FR 76913 (December 23, 2004) (*Ecuador Final Determination*); *Notice of Final Determination of Sales at Less Than Fair Value and Negative Final Determination of Critical Circumstances: Certain Frozen and Canned Warmwater Shrimp From India,* 69 FR 76916 (December 23, 2004) (*India Final Determination*); *Notice of Final Determination of Sales at Less Than Fair Value: Certain Frozen and Canned Warmwater Shrimp from the People's Republic of China,* 69 FR 70997 (December 8, 2004) (*China Final Determination*); *Notice of Final Determination of Sales at Less Than Fair Value: Certain Frozen and Canned Warmwater Shrimp from Thailand,* 69 FR 76918 (December 23, 2004) (*Thailand Final Determination*); *Final Determination of Sales at Less Than Fair Value: Certain Frozen and Canned Warmwater Shrimp From the Socialist Republic of Vietnam,* 69 FR 71005 (December 8, 2004) (*Vietnam Final Determination*); collectively the *Shrimp AD Final Determinations.*

[2] *See Notice of Amended Final Determination of Sales at Less Than Fair Value and Antidumping Duty Order: Certain Frozen Warmwater Shrimp from Brazil,* 70 FR 5143 (February 1, 2005) (*Brazil Amended Final Determination & Order*); *Notice of Amended Final Determination of Sales at Less Than Fair Value and Antidumping Duty Order: Certain Frozen Warmwater Shrimp from Ecuador,* 70 FR 5156 (February 1, 2005) (*Ecuador Amended Final Determination & Order*); *Notice of Amended Final Determination of Sales at Less Than Fair Value and Antidumping Duty Order: Certain Frozen Warmwater Shrimp from India,* 70 FR 5147 (February 1, 2005) (*India Amended Final Determination & Order*); *Notice of Amended Final Determination of Sales at Less Than Fair Value and Antidumping Duty Order: Certain Frozen Warmwater Shrimp from the People's Republic of China,* 70 FR 5149 (February 1, 2005) (*China Amended Final Determination & Order*); *Notice of Amended Final Determination of Sales at Less Than Fair Value and Antidumping Duty Order: Certain Frozen Warmwater Shrimp from Thailand,* 70 FR 5145 (February 1, 2005) (*Thailand Amended Final Determination & Order*); *Notice of Amended Final Determination of Sales at Less Than Fair Value and Antidumping Duty Order: Certain Frozen Warmwater Shrimp from the Socialist Republic of Vietnam,* 70 FR 5152 (February 1, 2005) (*Vietnam Amended Final Determination & Order*); collectively, the *Shrimp AD Amended Finals and Orders.*

[3] As is often the case, the amended final determinations and antidumping duty orders were written and published as one document. Thus, although the amended final determinations and orders may be referenced together as the *Shrimp AD Amended Finals and Orders,* only the scope of the *Shrimp AD Final Determinations* and subsequent amended final determinations are at issue in this remand determination.

DEPARTMENT OF COMMERCE

International Trade Administration

[A–570–888]

Floor-Standing, Metal Top Ironing Tables and Certain Parts Thereof From the People's Republic of China: Extension of Time Limit for Preliminary Results of Antidumping Duty Administrative Review

AGENCY: Import Administration, International Trade Administration, Department of Commerce

DATES: *Effective Date:* April 28, 2010.

FOR FURTHER INFORMATION CONTACT: Michael J. Heaney or Robert James, Import Administration, International Trade Administration, U.S. Department of Commerce, 14th Street and Constitution Avenue, NW., Washington DC 20230; telephone: (202) 482–4475 and (202) 482–0649, respectively.

SUPPLEMENTARY INFORMATION:

Background

At the request of interested parties, on September 22, 2009, the Department published in the **Federal Register** a notice of initiation of this antidumping duty administrative review. *See Initiation of Antidumping and Countervailing Duty Administrative Reviews and Request for Revocation in Part,* 74 FR 48224 (September 22, 2009). The review covers the period August 1, 2007, through July 31, 2008. The preliminary results for this administrative review are currently due no later than May 10, 2010.

Extension of Time Limits for Preliminary Results

Section 751(a)(3)(A) of the Tariff Act of 1930, as amended (the Act), requires the Department to complete the preliminary results of an administrative review within 245 days after the last day of the anniversary month of an order for which a review is requested. In this case, we note the deadline for completion of this administrative review has been extended by an additional seven days because of hazardous weather. *See* February 12, 2010 Memorandum, "Tolling of Administrative Deadlines As a Result of the Government Closure During the Recent Snowstorm." However, if it is not practicable to complete the review within this time period, section 751(a)(3)(A) of the Act allows the Department to extend the 245 day time period for the preliminary results up to a maximum of 365 days.

The Department has determined it is not practicable to complete this review within the statutory time limit because we require additional time to gather and analyze information relating to both Foshan Shunde's and Since Hardware's factors of production, and to verify Foshan Shunde's and Since Hardware's questionnaire responses. Accordingly, the Department is extending the time limits for completion of the preliminary results of this administrative review until no later than September 7, 2010, which is 365 days from the last day of the anniversary month of this order, plus the seven-day extension for hazardous weather. We intend to issue the final results in this review no later than 120 days after publication of the preliminary results.

This notice is issued and published in accordance with sections 751(a)(3)(A) and 777(i) of the Act.

Dated: February 21, 2010.

John Andersen,

Acting Deputy Assistant Secretary for Antidumping and Countervailing Duty Operations.

[FR Doc. 2010–9849 Filed 4–27–10; 8:45 am]

BILLING CODE 3510–DS–P

DEPARTMENT OF COMMERCE

International Trade Administration

[A–570–888]

Floor-Standing, Metal Top Ironing Tables and Certain Parts Thereof From the People's Republic of China: Extension of Time Limit for Preliminary Results of Antidumping Duty Administrative Review

AGENCY: Import Administration, International Trade Administration, Department of Commerce.

DATES: *Effective Date:* April 28, 2010.

FOR FURTHER INFORMATION CONTACT: Michael J. Heaney or Robert James, Import Administration, International Trade Administration, U.S. Department of Commerce, 14th Street and Constitution Avenue, NW., Washington DC 20230; telephone: (202) 482–4475 and (202) 482–0649, respectively.

SUPPLEMENTARY INFORMATION:

Background

At the request of interested parties, on September 22, 2009, the Department published in the **Federal Register** a notice of initiation of this antidumping duty administrative review. *See Initiation of Antidumping and Countervailing Duty Administrative Reviews and Request for Revocation in Part,* 74 FR 48224 (September 22, 2009). The review covers the period August 1, 2008, through July 31, 2009. The preliminary results for this administrative review are currently due no later than May 10, 2010.

Extension of Time Limits for Preliminary Results

Section 751(a)(3)(A) of the Tariff Act of 1930, as amended (the Act), requires the Department to complete the preliminary results of an administrative review within 245 days after the last day of the anniversary month of an order for which a review is requested. In this case, we note the deadline for completion of this administrative review has been extended by an additional seven days because of hazardous weather. *See* February 12, 2010 Memorandum, "Tolling of Administrative Deadlines As a Result of the Government Closure During the Recent Snowstorm." However, if it is not practicable to complete the review within this time period, section 751(a)(3)(A) of the Act allows the Department to extend the 245 day time period for the preliminary results up to a maximum of 365 days.

The Department has determined it is not practicable to complete this review within the statutory time limit because we require additional time to gather and analyze information relating to both Foshan Shunde's and Since Hardware's factors of production, and to verify Foshan Shunde's and Since Hardware's questionnaire responses. Accordingly, the Department is extending the time limits for completion of the preliminary results of this administrative review until no later than September 7, 2010, which is 365 days from the last day of the anniversary month of this order, plus the seven-day extension for hazardous weather. We intend to issue the final results in this review no later than 120 days after publication of the preliminary results.

This notice is issued and published in accordance with sections 751(a)(3)(A) and 777(i) of the Act.

Dated: April 21, 2010.

John Andersen,

Acting Deputy Assistant Secretary for Antidumping and Countervailing Duty Operations.

[FR Doc. 2010–9859 Filed 4–27–10; 8:45 am]

BILLING CODE 3510–DS–P

DEPARTMENT OF COMMERCE

International Trade Administration

[A–570–956]

Certain Seamless Carbon and Alloy Steel Standard, Line, and Pressure Pipe From the People's Republic of China: Preliminary Determination of Sales at Less Than Fair Value, Affirmative Preliminary Determination of Critical Circumstances, in Part, and Postponement of Final Determination

AGENCY: Import Administration, International Trade Administration, Department of Commerce

DATES: *Effective Date:* April 28, 2010.

SUMMARY: The Department of Commerce (the "Department") preliminarily determines that certain seamless carbon and alloy steel standard, line, and pressure pipe from the People's Republic of China ("PRC") is being, or is likely to be, sold in the United States at less than fair value ("LTFV"), as provided in section 733 of the Tariff Act of 1930, as amended (the "Act"). The estimated dumping margins are shown

in the "Preliminary Determination" section of this notice.

FOR FURTHER INFORMATION CONTACT: Magd Zalok or Zev Primor, AD/CVD Operations, Office 4, Import Administration, International Trade Administration, U.S. Department of Commerce, 14th Street and Constitution Avenue, NW., Washington, DC, 20230; telephone: (202) 482–4162 or 482–4114, respectively.

SUPPLEMENTARY INFORMATION:

Background

On September 16, 2009, the Department received an antidumping duty ("AD") petition concerning imports of certain seamless carbon and alloy steel standard, line, and pressure pipe ("seamless pipe") from the PRC filed in proper form by United States Steel Corporation ("U.S. Steel") and V&M Star L.P. *See* Petition for the Imposition of Antidumping Duties: Certain Seamless Carbon and Alloy Steel Standard, Line, and Pressure Pipe from the People's Republic of China, dated September 16, 2009 ("Petition"). On September 28, 2009, TMK IPSCO and the United Steel, Paper and Forestry, Rubber, Manufacturing, Energy, Allied Industrial and Service Workers International Union also entered the proceeding as petitioners (collectively, together with U.S. Steel and V&M Star L.P., "Petitioners"). The Department initiated the AD investigation on seamless pipe from the PRC on October 6, 2009. *See Certain Seamless Carbon and Alloy Steel Standard, Line, and Pressure Pipe From the People's Republic of China: Initiation of Antidumping Duty Investigation,* 74 FR 52744 (October 14, 2009) ("*Initiation Notice*").

In the *Initiation Notice,* the Department stated its intent to select respondents based on responses to quantity and value ("Q&V") questionnaires. *See Initiation Notice,* 75 FR at 52747. On October 7, 2009, the Department requested Q&V information from the 84 companies identified in the petition as potential producers or exporters of seamless pipe from the PRC. *See* "Respondent Selection in the Antidumping Duty Investigation of Certain Seamless Carbon and Alloy Steel Standard, Line, and Pressure Pipe from the People's Republic of China," dated November 5, 2009 ("Respondent Selection Memorandum"). The Department received timely responses to its Q&V questionnaire from the following companies: (1) Tianjin Pipe International Economic and Trading Corporation ("TPCO"); (2) Hengyang Steel Tube Group Int'l Trading Inc. ("Hengyang"); (3) Pangang Group Chengdu Iron & Steel Co., Ltd.; (4) Zhejiang Jianli Company Limited; (5) Yangzhou Chengde Steel Tube Co., Ltd.; (6) Xigang Seamless Steel Tube Co., Ltd.; (7) HeBei Hongling Seamless Steel Pipes Manufacturing Co., Ltd.; (8) Jiangyin City Changjiang Steel Pipe Co., Ltd.; and (9) Yangzhou Lontrin Steel Tube Co., Ltd. The Department confirmed that 77 of the 84 companies received the Q&V questionnaire, while the results from the international courier service's shipment tracking showed that two Q&V questionnaires were "arranged for delivery," and five were returned to the Department or not delivered due to incorrect addresses provided by Petitioners. *See* Respondent Selection Memorandum.

On November 2, 2009, the International Trade Commission ("ITC") preliminarily determined that there is a reasonable indication that an industry in the United States is threatened with material injury by reason of imports of certain seamless carbon and alloy steel standard, line, and pressure pipe from the PRC. *See Certain Seamless Carbon and Alloy Steel Standard, Line, and Pressure Pipe From China, Investigation Nos. 701–TA–469 and 731–TA–1168 (Preliminary),* 74 FR 57521 (November 6, 2009).

On November 5, 2009, the Department selected TPCO and Hengyang as the mandatory respondents. *See* Respondent Selection Memorandum. On November 6, 2009, the Department issued an antidumping questionnaire to both companies. On November 10, 2009, U.S. Steel submitted comments to the Department regarding the physical characteristics of subject merchandise that it argued should be used in comparing sales prices with normal value ("NV").

TPCO and Hengyang submitted timely responses to the Department's questionnaires and supplemental questionnaires between December 2009 and April 2010. Hengyang responded to the Department's questionnaire on behalf of itself, Xigang Seamless Steel Tube Co., Ltd., and Wuxi Seamless Special Pipe Co., Ltd. (collectively "Xigang"), exporters/producers of subject merchandise, claiming that the companies are affiliated and should be treated as a single entity. The Department received properly filed separate-rate applications for Jiangyin City Changjiang Steel Pipe Co., Ltd. ("Jiangyin City"), Pangang Group Chengdu Iron & Steel Co., Ltd. ("Pangang Group"), Yangzhou Lontrin Steel Tube Co., Ltd. ("Yangzhou Lontrin"), and Yangzhou Chengde Steel Tube Co., Ltd. ("Yangzhou Chengde") from November 7, 2009, through December 14, 2009.

The Department issued supplemental questionnaires to, and received responses from, TPCO, Hengyang, Yangzhou Chengde, and Yangzhou Lontrin between October 2009 and April 2010. U.S. Steel submitted comments to the Department on the questionnaire and/or supplemental questionnaire responses of TPCO, Hengyang and the separate rate applicant Yangzhou Chengde between February and March 2010.

On January 7, 2010, the Department released a memorandum to interested parties which listed potential surrogate countries and invited interested parties to comment on surrogate country and surrogate value selection. *See* Memorandum to Howard Smith, Program Manager, AD/CVD Operations Office 4, from Kelly Parkhill, Acting Director for Policy, Office of Policy, "Request for A List of Surrogate Countries for an Antidumping Duty Investigation of Certain Seamless Carbon and Alloy Steel Standard, Line, and Pressure Pipe from the People's Republic of China," dated January 7, 2010 ("Office of Policy Surrogate Country List Memorandum"). The countries identified in that memorandum as being at a level of economic development comparable to the PRC for the specified period of investigation ("POI") are India, the Philippines, Indonesia, Thailand, Ukraine, and Peru. On January 20, 2010, the Department received comments on surrogate country selection and surrogate value information from Petitioners. On February 16, 2010, TPCO and Hengyang submitted surrogate value and surrogate country comments. Petitioners, TPCO and Hengyang stated that the Department should select India as the surrogate country for this investigation. No other interested parties commented on the selection of a surrogate country. For a detailed discussion of the selection of the surrogate country, *see* the "Surrogate Country" section below.

On January 22, 2010, Petitioners requested postponement of the preliminary determination. On February 8, 2010, the Department postponed this preliminary determination by fifty days pursuant to section 733(c)(1)(A) of the Tariff Act. *See Certain Seamless Carbon and Alloy Steel Standard, Line, and Pressure Pipe from the People's Republic of China: Postponement of Preliminary Determination of Antidumping Duty Investigation,* 75 FR 6183 (February 8, 2010). Moreover, as explained in the memorandum from the Deputy Assistant Secretary for Import

Administration, the Department exercised its discretion to toll deadlines for the duration of the closure of the Federal Government from February 5, through February 12, 2010. Thus, all deadlines in this segment of the proceeding have been extended by seven days. *See* Memorandum to the Record from Ronald Lorentzen, DAS for Import Administration, regarding "Tolling of Administrative Deadlines As a Result of the Government Closure During the Recent Snowstorm," dated February 12, 2010. Based on this memorandum, the revised deadline for the preliminary determination in this investigation is April 21, 2010.

On January 7, 2010, U.S. Steel made a critical circumstances allegation with respect to TPCO and Hengyang. On March 3, 2010, U.S. Steel supplemented its critical circumstances allegation. Based on U.S. Steel's critical circumstances allegation, between March 4 and March 22, 2010, we requested and received shipment data from TPCO and Hengyang. Moreover, on March 18, 2010, U.S. Steel submitted a targeted dumping allegation with respect to TPCO and Hengyang.

Given record information indicating that TPCO is affiliated with one of its U.S. customers, on March 3, 2010, we requested that TPCO submit to the Department a section C database which includes all downstream sales of subject merchandise made by TPCO's affiliated U.S. customer during the POI. In response to this request, on March 15, 2010, TPCO stated that it was unable to provide such downstream sales. Moreover, on March 25, 2010, we requested once again that TPCO submit to the Department the downstream sales for the customer in question, and provide additional information pertaining to TPCO's corporate structure and affiliations. On March 26, 2010, TPCO requested an extension of time, until April 9, 2010, to submit the downstream sales of its U.S. customer. In response to TPCO's request, the Department granted TPCO the aforementioned extension of time for submitting the downstream sales, until April 9, 2010. In response to the Department's request, on March 29 and April 5, 2010, TPCO submitted additional information regarding its corporate structure and affiliations, and reported that it asked its U.S. customer with which the Department considered it to be affiliated to provide the downstream sales in question.

On April 9, 2010, instead of reporting the downstream sales requested by the Department, TPCO submitted a letter stating that it would be able to report the downstream sales of its U.S. customer, but it needed an additional extension of time to report the sales. On April 16, 2010, the Department rejected TPCO's second request for an extension of time to submit the downstream sales of the U.S. customer in question. Despite the Department's decision not to grant TPCO an extension of time to submit the downstream sales data, on April 19, 2010, TPCO submitted that data and requested that the Department reconsider its decision not to extend the deadline for supplying the data. On April 21, the Department rejected the downstream sales data and removed the data from the record.

On March 26, 2010, TPCO, Hengyang, and U.S. Steel submitted pre-preliminary comments on the selection of surrogate values and other issues discussed in the relevant sections of this **Federal Register** notice, below.

Moreover, on April 9, 2010, TPCO and Hengyang requested that the Department postpone the final determination in this case. *See* the "Postponement of Final Determination" section of this notice below.

Period of Investigation

The POI is January 1, 2009, through June 30, 2009. This period corresponds to the two most recently completed fiscal quarters prior to the month in which the petition was filed (*i.e.,* September 2009). *See* 19 CFR 351.204(b)(1).

Scope of the Investigation

The merchandise covered by this investigation is certain seamless carbon and alloy steel (other than stainless steel) pipes and redraw hollows, less than or equal to 16 inches (406.4 mm) in outside diameter, regardless of wall-thickness, manufacturing process (*e.g.,* hot-finished or cold-drawn), end finish (*e.g.,* plain end, beveled end, upset end, threaded, or threaded and coupled), or surface finish (*e.g.,* bare, lacquered or coated). Redraw hollows are any unfinished carbon or alloy steel (other than stainless steel) pipe or "hollow profiles" suitable for cold finishing operations, such as cold drawing, to meet the American Society for Testing and Materials ("ASTM") or American Petroleum Institute ("API") specifications referenced below, or comparable specifications. Specifically included within the scope are seamless carbon and alloy steel (other than stainless steel) standard, line, and pressure pipes produced to the ASTM A–53, ASTM A–106, ASTM A–333, ASTM A–334, ASTM A–335, ASTM A–589, ASTM A–795, ASTM A–1024, and the API 5L specifications, or comparable specifications, and meeting the physical parameters described above, regardless of application, with the exception of the exclusion discussed below. Specifically excluded from the scope of the investigation are unattached couplings. The merchandise covered by the investigation is currently classified in the Harmonized Tariff Schedule of the United States ("HTSUS") under item numbers: 7304.19.1020, 7304.19.1030, 7304.19.1045, 7304.19.1060, 7304.19.5020, 7304.19.5050, 7304.31.6050, 7304.39.0016, 7304.39.0020, 7304.39.0024, 7304.39.0028, 7304.39.0032, 7304.39.0036, 7304.39.0040, 7304.39.0044, 7304.39.0048, 7304.39.0052, 7304.39.0056, 7304.39.0062, 7304.39.0068, 7304.39.0072, 7304.51.5005, 7304.51.5060, 7304.59.6000, 7304.59.8010, 7304.59.8015, 7304.59.8020, 7304.59.8025, 7304.59.8030, 7304.59.8035, 7304.59.8040, 7304.59.8045, 7304.59.8050, 7304.59.8055, 7304.59.8060, 7304.59.8065, and 7304.59.8070.

Although the HTSUS subheadings are provided for convenience and customs purposes, our written description of the merchandise subject to this scope is dispositive.

Scope Comments

In accordance with the preamble to the Department's regulations, we set aside a period of time in our *Initiation Notice* for parties to raise issues regarding product coverage, and encouraged all parties to submit comments within 20 calendar days of the signature date of that notice. *See Antidumping Duties; Countervailing Duties; Final Rule,* 62 FR 27296, 27323 (May 19, 1997). *See also Initiation Notice,* 75 FR at 52744–45.

On October 27, 2009, the Department received comments from Wyman-Gordon Inc. ("Wyman-Gordon"), a U.S. manufacturer of extruded seamless pipe for oil and gas and power generation applications. Wyman-Gordon maintained that Petitioners do not produce seamless pipe made to ASTM–335 specifications, which is covered by the scope of this investigation, and that it is the only U.S. manufacturer of seamless pipe with nominal wall-thickness greater than 1.594 inches. In response, on November 9, 2009, Petitioners refuted Wyman-Gordon's allegations, asserting that there are at least five other U.S. companies producing seamless steel pipe made to ASTM–335 specifications; namely, Mach Industrial Group, Rockwell Collins Rollmet, Timken, U.S. Steel, and Michigan Seamless Tube. Petitioners

also refuted Wyman-Gordon's contention that it is the only U.S. producer of seamless pipe with a wall thickness greater than 1.594 inches. In support of their argument, Petitioners provided documentation indicating that they produce seamless standard and line pipe of less than 16 inches in outside diameter that has a wall-thickness equal to or greater than 1.594 inches. *See* Exhibit 3 of Petitioners' November 9, 2009, submission. Petitioners further argued that Wyman-Gordon's contention that it is the only U.S. producer of seamless steel pipe manufactured through use of the extrusion process, does not comport with the fact that U.S. producers, such as Michigan Seamless Tube, use a draw bench and stationary die to control the diameter in very close tolerance. Moreover, citing *Light-Walled Rectangular Pipe and Tube from Mexico: Notice of Final Determination of Sales at Less than Fair Value,* 69 FR 53677 (September 2, 2004) and the accompanying Issues and Decision Memorandum at Comment 5 ("*Light-Walled from Mexico*"), Petitioners argued that the Department has repeatedly stated that "the statute does not require that petitioners currently produce every type of product that is encompassed by the scope of the investigation." According to Petitioners, the product is included in the scope if it is part of the same like product. Finally, Petitioners maintained that Wyman-Gordon's proposed alterations to the scope of the investigation would pose a significant risk of circumvention of the AD order (if imposed) and should, therefore, be rejected by the Department.

On February 3, 2010, Sumitomo Corporation of America ("SCOA") argued that mechanical tubing produced to ASTM A–519 specifications should not be covered by the scope of the investigation because such mechanical tubing is not similar to any of the products covered by the scope. SCOA further argued that this type of mechanical tubing was excluded from an AD investigation covering products from Japan that are identical to the products covered in this investigation. Thus, SCOA argued that mechanical tubing should be excluded from the scope of this investigation.

On April 5, 2010, one of the Petitioners, V&M Star L.P. objected to SCOA's request to exclude its mechanical tubing from the scope of the investigation. V&M Star L.P contended that: (1) Mechanical tubing is not specifically excluded from the scope; (2) SCOA's product meets the physical parameters described in the scope; and (3) products can be certified to multiple specifications. Thus, products conforming to the specifications listed in the scope, or comparable specifications, that otherwise meet the physical parameters identified in the scope should be considered covered by the scope even if they are certified to a specification not specifically listed in the language of the scope of the investigation.

The Department finds that Wyman-Gordon's argument, with respect to seamless pipe produced to ASTM–335 specifications, involves the question of whether the petition was filed by or on behalf of the domestic industry. *See* section 732(c)(4) of the Act. Pursuant to section 732(c)(4)(E) of the Act, interested parties may submit comments regarding industry support before initiation, and a determination regarding industry support shall not be reconsidered after the Department's initiation of an investigation. In this case, Wyman-Gordon's comments were submitted after initiation and therefore we will not reconsider our determination as to industry support at this stage of the proceeding. Moreover, we agree with Petitioners that the statute does not require the petitioners to currently produce every type of product that is encompassed by the scope of the investigation. *See Light-Walled from Mexico* at Comment 5. Accordingly, the Department has not reconsidered Petitioners' standing with respect to seamless pipe produced to ASTM–335 specifications, and made no changes to the scope of the investigation based on Wyman-Gordon's allegation.

With respect to SCOA's argument regarding mechanical tubing, the Department agrees with Petitioners that if a product conforms to the specifications in the scope or a comparable specification, and it meets the physical parameters identified in the scope, it is covered by the scope of the investigation. SCOA has failed to demonstrate that's its product does not conform to the scope of this investigation. *See* "Scope of the Investigation" section above.

Separate Treatment for Hengyang and Xigang

As indicated above, the Department selected Hengyang as one of the mandatory respondents in this investigation. In responding to the Department's antidumping questionnaire, Hengyang independently treated itself and Xigang as a single entity, *i.e.,* collapsed itself with Xigang. Hengyang primarily based its decision to collapse itself with Xigang on the fact that a third party, the holding company Hunan Valin Iron and Steel Group Co., Ltd., maintains common ownership in both Hengyang and Xigang.

Pursuant to 19 CFR 351.401(f)(1), the Department will treat producers as a single entity, or "collapse" them, where: (1) Those producers are affiliated; (2) the producers have production facilities for producing similar or identical products that would not require substantial retooling of either facility in order to restructure manufacturing priorities; and (3) there is a significant potential for manipulation of price or production. In determining whether a significant potential for manipulation exists, 19 CFR 351.401(f)(2) states that the Department may consider various factors, including: (1) The level of common ownership; (2) the extent to which managerial employees or board members of one firm sit on the board of directors of an affiliated firm; and (3) whether the operations of the affiliated firms are intertwined such as through the sharing of sales information, involvement in production and pricing decisions, the sharing of facilities or employees, or significant transactions between the affiliated producers.

The Department preliminarily concludes that the totality of the record evidence does not support collapsing Hengyang and Xigang into a single entity, pursuant to 19 CFR 351.401(f)(1). Accordingly, the Department preliminarily based its margin calculation only on the information submitted pertaining to Hengyang. For further discussion on the Department's decision not to collapse Hengyang with Xigang, see the memorandum to John M. Andersen, Acting Deputy Assistant Secretary for Antidumping and Countervailing Operations "Affiliation and Single Entity Status of Certain Respondents in the Antidumping Duty Investigation of Seamless Carbon and Alloy Steel Standard, Line, and Pressure Pipe ("Seamless Pipe") from the People's Republic of China ("PRC"), dated April 19, 2010.

Targeted Dumping Allegation

As noted above, on March 18, 2010, U.S. Steel submitted targeted dumping allegations with respect to Hengyang and TPCO, requesting that the Department apply the average-to-transaction methodology in calculating the margin for these companies.[1] For Hengyang, U.S. Steel maintained that there are patterns of export prices ("EP") for comparable merchandise that differ significantly among regions and time

[1] *See* U.S. Steel's targeted-dumping allegation regarding "Seamless Carbon and Alloy Steel Standard, Line, and Pressure Pipe from the People's Republic of China Seamless" dated March 18, 2010.

periods. Petitioners relied on the Department's targeted-dumping test in the *Notice of Final Determination of Sales at Less Than Fair Value: Coated Free Sheet Paper from the Republic of Korea,* 72 FR 60630 (October 25, 2007) ("*CFS*"). Alternatively, in the event the Department determines not to use the targeted dumping test employed in *CFS,* Petitioners applied the Department's test in *Certain Steel Nails from the United Arab Emirates: Notice of Final Determination of Sales at Not Less Than Fair Value,* 73 FR 33985 (June 16, 2008), and *Certain Steel Nails from the People's Republic of China: Final Determination of Sales at Less Than Fair Value and Partial Affirmative Determination of Critical Circumstances,* 73 FR 33977 (June 16, 2008) (collectively, "*Nails*"). Petitioners alleged that under this test, there is a pattern of EPs for comparable merchandise that differ significantly among regions.

The statute allows the Department to employ the average-to-transaction margin calculation methodology in an investigation under the following circumstances: (1) There is a pattern of export prices that differ significantly among purchasers, regions, or periods of time; and (2) the Department explains why such differences cannot be taken into account using the average-to-average or transaction-to-transaction methodology. *See* section 777A(d)(1)(B) of the Act.

The Department notes that its current methodology for determining whether targeted dumping exists is based on the methodology applied in *Nails.* Consequently, the Department has, preliminarily, considered only the part of Petitioners' allegation which is based on the Department's methodology in *Nails. See Certain Oil Country Tubular Goods From the People's Republic of China: Notice of Preliminary Determination of Sales at Less Than Fair Value, Affirmative Preliminary Determination of Critical Circumstances and Postponement of Final Determination,* 74 FR 59117, 59118 (November 17, 2009), as amended in *Certain Oil Country Tubular Goods From the People's Republic of China: Notice of Amended Preliminary Determination of Sales at Less Than Fair Value,* 74 FR 69065 (December 30, 2009). Since the Department has preliminarily determined not to collapse Hengyang and Xigang, the Department's evaluation of Petitioners' targeted dumping allegation regarding Hengyang was based solely on Hengyang's U.S. sales during the POI. After analyzing Hengyang's U.S. sales, we found no evidence of a pattern of EPs for comparable merchandise that differ significantly among regions. *See* Analysis Memorandum for Hengyang, dated April 21, 2010.

Petitioners also alleged targeted dumping with respect to TPCO. Applying the P/2 test, Petitioners alleged a clear pattern of price differences among regions. Additionally, using the *Nails* test, Petitioners alleged a pattern of prices for comparable merchandise that differ significantly by time period.[2] As stated above, the current methodology for determining whether targeted-dumping exists is based on the methodology applied in *Nails.* Consequently, the Department has, preliminarily, considered only the part of Petitioners' allegation which is based on the Department's methodology in *Nails.*

Petitioners divided the POI into six separate months and submitted each month to the *Nails* test. Petitioners contend that the results of this test show a pattern of prices for TPCO's sales in a certain time period that differ significantly from its prices of comparable merchandise in other months of the POI.[3]

After analyzing TPCO's U.S. sales, we found no evidence of a pattern of prices for comparable merchandise that differ significantly among time periods. *See* Analysis Memorandum for TPCO, dated April 21, 2010.

Critical Circumstances

As stated above, on January 7, 2010, U.S. Steel made a critical circumstances allegation with respect to TPCO and Hengyang, which it supplemented on March 3, 2010. After reviewing the record evidence, the Department preliminarily finds that there is reason to believe or suspect that critical circumstances exist for imports of subject merchandise from Hengyang and the PRC-wide entity but not for TPCO or the separate rate companies, which includes Xigang. Specifically, the Department finds that: (A) In accordance with section 733(e)(1)(A)(ii) of the Act, the person by whom, or for whose account, the merchandise was imported knew or should have known that the exporter was selling the subject merchandise at less than its fair value and that there was likely to be material injury by reason of such sales; and (B) in accordance with section 733(e)(1)(B) of the Act, Hengyang and the PRC-wide entity had massive imports during a relatively short period. *See* Memorandum to John M. Andersen, Acting Deputy Assistant Secretary for Antidumping and Countervailing Duty Operations from Abdelali Elouaradia, Director, Office 4, "Antidumping Duty Investigation of Seamless Carbon and Alloy Steel Standard, Line, and Pressure Pipe from the People's Republic of China: Preliminary Affirmative Determination of Critical Circumstances," dated April 21, 2010.

Non-Market Economy Treatment

The Department considers the PRC to be a non-market economy ("NME") country. In accordance with section 771(18)(C)(i) of the Act, any determination that a country is an NME country shall remain in effect until revoked by the administering authority. *See, e.g., Tapered Roller Bearings and Parts Thereof, Finished and Unfinished, From the People's Republic of China: Preliminary Results of 2001–2002 Administrative Review and Partial Rescission of Review,* 68 FR 7500 (February 14, 2003), unchanged in *Tapered Roller Bearings and Parts Thereof, Finished and Unfinished, from the People's Republic of China: Final Results of 2001–2002 Administrative Review and Partial Rescission of Review,* 68 FR 70488 (December 18, 2003). No party has challenged the designation of the PRC as an NME country, and the Department has not revoked the PRC's status as an NME country. Therefore, in this preliminary determination, we have treated the PRC as an NME country and applied our current NME methodology.

Surrogate Country

When the Department is investigating imports from an NME country, section 773(c)(1) of the Act directs it to base NV, in most circumstances, on the NME producer's factors of production ("FOP") valued in a surrogate market-economy country or countries considered to be appropriate by the Department. In accordance with section 773(c)(4) of the Act, in valuing the FOP, the Department shall utilize, to the extent possible, the prices or costs of the FOP in one or more market-economy countries that are at a level of economic development comparable to that of the NME country and are significant producers of comparable merchandise. The sources of the surrogate values we have used in this investigation are discussed in the "Normal Value" section below.

The Department determined that India, the Philippines, Indonesia, Thailand, Ukraine and Peru are countries comparable to the PRC in terms of economic development. *See* Office of Policy Surrogate Country List Memorandum. Once countries that are economically comparable to the PRC

[2] *Id.* at Exhibit 3b.

[3] *Id.*

have been identified, we select an appropriate surrogate country by determining whether an economically comparable country is a significant producer of comparable merchandise and whether the data for valuing FOP is both available and reliable. *See id.* On January 20, 2010, Petitioners filed comments urging the Department to select India as a surrogate country and claiming that India is a significant producer of merchandise comparable to the merchandise under investigation. Specifically, Petitioners noted that the *Simdex Steel Tube Manufacturers Worldwide Guide* identifies no less than 76 Indian producers of tubular products and the *Steel Statistical Yearbook 2008* reported that in 2007 India exported 1.36 million metric tons of tubular products. *See* Petitioners' January 20, 2010 submission at 6 and Exhibits A and B. Petitioners, TPCO, and Hengyang also submitted information on the record demonstrating that the Department can value the major FOP for subject merchandise using reliable, publicly available data from Indian sources. *See* Petitioner's January 20, 2010, surrogate country and surrogate value comments. *See also* TPCO's and Hengyang's February 16, 2010, surrogate value and surrogate country comments, respectively. No other party provided comments on the record concerning the appropriate surrogate country.

Based on evidence placed on the record, we have determined that it is appropriate to use India as a surrogate country pursuant to section 773(c)(4) of the Act based on the following: (1) It is at a level of economic development comparable to the PRC; (2) it is a significant producer of comparable merchandise; and (3) we have reliable data from India that we can use to value the FOP. *See* Petitioner's January 20, 2010, surrogate country and surrogate value comments. *See also,* surrogate value and surrogate country comments from TPCO and Hengyang, dated February 16, 2010. Thus, to calculate NV, we are using Indian prices, when available and appropriate, to value the FOP of TPCO and Hengyang. We have obtained and relied upon publicly available information wherever possible. *See* Surrogate Value Memorandum, dated April 21, 2010 ("Surrogate Value Memorandum").

In accordance with 19 CFR 351.301(c)(3)(i), for the final determination in an AD investigation, interested parties may submit publicly available information to value the FOP within 40 days after the date of publication of the preliminary determination.[4]

Separate Rates

In the *Initiation Notice,* the Department notified parties of the application process by which exporters and producers may obtain separate-rate status in NME investigations. The process requires exporters and producers to submit a separate-rate status application.[5]

In proceedings involving NME countries, the Department has a rebuttable presumption that all companies within the country are subject to government control and thus should be assessed a single AD rate. It is the Department's policy to assign all exporters of subject merchandise in an NME country this single rate unless an exporter can demonstrate that it is sufficiently independent so as to be entitled to a separate rate. Exporters can demonstrate this independence through the absence of both *de jure* and *de facto* governmental control over export activities. The Department analyzes each entity exporting the subject merchandise under a test arising from the *Notice of Final Determination of Sales at Less Than Fair Value: Sparklers from the People's Republic of China,* 56 FR 20588 (May 6, 1991) ("*Sparklers*"), as further developed in *Notice of Final Determination of Sales at Less Than Fair Value: Silicon Carbide from the People's Republic of China,* 59 FR 22585 (May 2, 1994) ("*Silicon Carbide*"). However, if the Department determines that a company is wholly foreign-owned or located in a market economy, then a separate-rate analysis is not necessary to determine whether it is independent from government control.

Separate Rate Recipients[6]

Joint Ventures Between Chinese and Foreign Companies or Wholly Chinese-Owned Companies

The mandatory respondents, TPCO and Hengyang, and the separate rate applicants, Jiangyin City, Pangang Group, Yangzhou Lontrin, Yangzhou Chengde, and Xigang (collectively, "Chinese SR Applicants") provided evidence that they are wholly Chinese-owned companies. The Department has analyzed whether TPCO, Hengyang and the Chinese SR Applicants have demonstrated the absence of *de jure* and *de facto* governmental control over their respective export activities.

a. Absence of *De Jure* Control

The Department considers the following *de jure* criteria in determining whether an individual company may be granted a separate rate: (1) An absence of restrictive stipulations associated with an individual exporter's business and export license; (2) legislative enactments decentralizing control of companies; and (3) other formal measures by the government decentralizing control of companies. *See Sparklers,* 56 FR at 20589.

The evidence provided by TPCO, Hengyang and the Chinese SR Applicants supports a preliminary finding of absence of *de jure* governmental control based on the following: (1) An absence of restrictive stipulations associated with the individual exporters' business and export licenses; (2) the existence of applicable legislative enactments decentralizing control of Chinese companies; and (3) the implementation of formal measures by the government decentralizing control of Chinese companies.

b. Absence of *De Facto* Control

Typically, the Department considers four factors in evaluating whether each respondent is subject to *de facto*

[4] In accordance with 19 CFR 351.301(c)(1), for the final determination of this investigation, interested parties may submit factual information to rebut, clarify, or correct factual information submitted by an interested party less than ten days before, on, or after, the applicable deadline for submission of such factual information. However, the Department notes that 19 CFR 351.301(c)(1) permits new information only insofar as it rebuts, clarifies, or corrects information recently placed on the record. The Department generally will not accept the submission of additional, previously absent-from-the-record alternative surrogate value information pursuant to 19 CFR 351.301(c)(1). *See Glycine from the People's Republic of China: Final Results of Antidumping Duty Administrative Review and Final Rescission, in Part,* 72 FR 58809 (October 17, 2007), and accompanying Issues and Decision Memorandum at Comment 2.

[5] *See Policy Bulletin 05.1: Separate-Rates Practice and Application of Combination Rates in Antidumping Investigations involving Non-Market Economy Countries* (April 5, 2005), available at *http://ia.ita.doc.gov*, which states: "while continuing the practice of assigning separate rates only to exporters, all separate rates that the Department will now assign in its NME investigations will be specific to those producers that supplied the exporter during the period of investigation. Note, however, that one rate is calculated for the exporter and all of the producers which supplied subject merchandise to it during the period of investigation. This practice applied both to mandatory respondents receiving an individually calculated separate rate as well as the pool of non-investigated firms receiving the weighted-average of the individually calculated rates. This practice is referred to as the application of "combination rates" because such rates apply to specific combinations of exporters and one or more producers. The cash-deposit rate assigned to an exporter will apply only to merchandise both exported by the firm in question and produced by a firm that supplied the exporter during the period of investigation."

[6] All separate rate applicants receiving a separate rate are hereby referred to collectively as the "SR Recipients."

governmental control of its export functions: (1) Whether the export prices are set by or are subject to the approval of a governmental agency; (2) whether the respondent has authority to negotiate and sign contracts and other agreements; (3) whether the respondent has autonomy from the government in making decisions regarding the selection of management; and (4) whether the respondent retains the proceeds of its export sales and makes independent decisions regarding disposition of profits or financing of losses. *See Silicon Carbide,* 59 FR at 22586–87; *see also Notice of Final Determination of Sales at Less Than Fair Value: Furfuryl Alcohol From the People's Republic of China,* 60 FR 22544, 22545 (May 8, 1995). The Department has determined that an analysis of *de facto* control is critical in determining whether respondents are, in fact, subject to a degree of governmental control which would preclude the Department from assigning separate rates.

The evidence provided by TPCO, Hengyang and the Chinese SR Applicants supports a preliminary finding of *de facto* absence of governmental control based on record statements and supporting documentation showing that the companies: (1) Set their own export prices independent of the government and without the approval of a government authority; (2) have the authority to negotiate and sign contracts and other agreements; (3) maintain autonomy from the government in making decisions regarding the selection of management; and (4) retain the proceeds of their respective export sales and make independent decisions regarding disposition of profits or financing of losses.

Therefore, the evidence placed on the record of this investigation by TPCO, Hengyang, and the Chinese SR Applicants demonstrates an absence of *de jure* and *de facto* government control under the criteria identified in *Sparklers* and *Silicon Carbide.* Accordingly, the Department has preliminarily granted a separate rate to TPCO, Hengyang and the Chinese SR Applicants. *See* "Preliminary Determination" section below.

Margins for Separate Rate Applicants Not Individually Examined

Through the evidence in their applications, the Chinese SR Applicants have demonstrated their eligibility for a separate rate. *See* the "Separate Rates" section above. Normally, the separate rate is determined based on the estimated weighted-average dumping margins established for exporters and producers individually investigated, excluding zero and *de minimis* margins or margins based entirely on adverse facts available ("AFA"). *See* section 735(c)(5)(A) of the Act. In this case, we have applied an average of the rates calculated for TPCO and Hengyang to the Chinese SR Applicants for purposes of the preliminary determination.

Partial Adverse Facts Available for TPCO

As discussed above, the Department selected TPCO as a mandatory respondent. Based on record information, we have preliminarily determined that TPCO is affiliated with a U.S. customer to which it sold subject merchandise during the POI pursuant to sections 771(33)(E), (F) and (G) of the Act. For a full discussion of the affiliation issue, the details of which are proprietary, see the memorandum from Abdelali Elouaradia to John M. Andersen, dated concurrently with this notice ("Affiliation Memorandum").

In the antidumping questionnaire issued to TPCO in the instant investigation on November 6, 2009, the Department explained the definition of affiliation, pursuant to Section 771(33) of the Act, and requested that TPCO state whether it made shipments or sales to unaffiliated parties, affiliated parties or both, during the POI, and whether it had any affiliates located in the United States or that exported merchandise to the United States which would fall under the description of merchandise covered by the scope of the proceeding. *See* the Department's November 6, 2009, questionnaire ("Antidumping Questionnaire"). In its Antidumping Questionnaire, the Department also instructed TPCO to exclude its U.S. sales to affiliated resellers, and report instead the resales to the first unaffiliated customer. *Id.* However, despite the fact that as early as November 17, 2009, TPCO should have been aware that the downstream sales in question may need to be reported given that it faced a parallel issue in the oil country tubular goods AD investigation, and notwithstanding the Department's instructions to TPCO in the instant investigation not to report sales to affiliated customers in its response to the Department's Antidumping Questionnaire, TPCO reported subject merchandise sales to the affiliated U.S. customer in question instead of reporting the downstream sales of that affiliated U.S. customer. *See Certain Oil Country Tubular Goods from the People's Republic of China: Final Determination of Sales at Less Than Fair Value, Affirmative Final Determination of Critical Circumstances and Final Determination of Targeted Dumping,* 75 FR 20335 (April 19, 2010) and accompanying Issues and Decision Memorandum at Comment 9.

As noted above, given record information indicating that TPCO is affiliated with one of its U.S. customers, on March 3, 2010, we requested that TPCO submit to the Department a section C database which includes all downstream sales of subject merchandise made by TPCO's affiliated U.S. customer during the POI. In the aforementioned request, the Department also alerted TPCO to the fact that if it failed to submit the downstream sales of its U.S. customer, the Department may apply AFA to TPCO. Nevertheless, in response to the Department's request, on March 16, 2010, TPCO stated that it was unable to provide such downstream sales because the records for the customer were not available to TPCO. On March 25, 2010, we placed additional information on the record regarding the U.S. customer at issue (*see* the Affiliation Memorandum) and once again requested that TPCO submit to the Department the downstream sales of the customer in question. We again notified TPCO that if it failed to submit the downstream sales of the customer in question, the Department may base TPCO's dumping margin on AFA. As indicated above, TPCO requested an extension of time, until April 9, 2010, to submit the downstream sales of its U.S. customer. In response to TPCO's request, the Department granted it the full extension of time to submit such downstream sales. On March 29, 2010, TPCO informed the Department that it had "officially requested" that its customer provide its downstream sales. In response to the Department's latest request for the downstream sales of TPCO's affiliated U.S. customer, on April 9, 2010, TPCO reported that it would be able to provide the downstream sales but needed an extension of time until two days before the fully-extended due date of the preliminary determination to provide them. On April 16, 2010, the Department rejected TPCO's request for an additional extension of time to submit the downstream sales of the U.S. customer in question.

Section 776(a) of the Act provides that the Department shall apply "facts otherwise available" ("FA") if (1) necessary information is not on the record, or (2) an interested party or any other person (A) withholds information that has been requested, (B) fails to provide information within the deadlines established, or in the form and manner requested by the

Department, subject to subsections (c)(1) and (e) of section 782 of the Act, (C) significantly impedes a proceeding, or (D) provides information that cannot be verified as provided by section 782(i) of the Act.

Section 776(b) of the Act further provides that the Department may use an adverse inference in applying the facts otherwise available when a party has failed to cooperate by not acting to the best of its ability to comply with a request for information. *See SAA* at 870. *See also, Notice of Final Determination of Sales at Less Than Fair Value: Certain Cold-Rolled Flat-Rolled Carbon-Quality Steel Products from the Russian Federation,* 65 FR 5510, 5518 (February 4, 2000) ("*Certain Cold-Rolled Flat-Rolled Carbon-Quality Steel Products*"). Such an adverse inference may include reliance on information derived from the petition, the final determination, a previous administrative review, or other information placed on the record. *See* section 776(b) of the Act.

Although TPCO and its affiliated U.S. customer indicated they can provide the requested downstream sales two days before the due date for this preliminary determination, their repeated failure to provide the downstream sales, despite the Department's multiple requests for the data, means that all the information necessary for the Department to calculate an accurate dumping margin for TPCO is not on the record and available for use in the preliminary determination. Moreover, before such information is used by the Department, the Department requires time to analyze the data and has to have an opportunity to issue supplemental questionnaires and allow interested parties to comment on the data. TPCO and its affiliated U.S. customer have foreclosed these steps by their actions. Section 772(a) and (b) of the Act requires the Department to base its margin calculations on the price at which subject merchandise is first sold to unaffiliated U.S. purchasers. Since TPCO failed to provide the requested downstream sales to unaffiliated U.S. customers by the (extended) deadlines, this necessary information was not available on the record and thus, we have determined, pursuant to section 776(a)(1) and (2)(B) of the Act, that it is appropriate to base TPCO's preliminary dumping margin, in part, on FA.

Furthermore, in selecting from among the FA, we have determined, pursuant to section 776(b) of the Act, that it is appropriate to use an adverse inference because TPCO failed to cooperate by not acting to the best of its ability to comply with a request for information. Adverse inferences are appropriate "to ensure that the party does not obtain a more favorable result by failing to cooperate than if it had cooperated fully."[7] The Court of Appeals Federal Circuit ("CAFC"), in *Nippon,* provided an explanation of the "failure to act to the best of its ability" standard, stating that the ordinary meaning of "best" means "one's maximum effort," and that the statutory mandate that a respondent act to the "best of its ability" requires the respondent to do the maximum it is able to do.[8] The CAFC indicated that inadequate responses to agency inquiries "would suffice" as a basis for finding that a respondent has failed to cooperate to the best of its ability.[9] Compliance with the "best of its ability" standard is determined by assessing whether a respondent has put forth its maximum effort to provide the Department with full and complete answers to all inquiries in an investigation.[10]

TPCO's response to the Department's initial request for the downstream sales was simply to state that it has no control over the U.S. customer and no access to the customer's records. Based on TPCO's later submissions, it appears that TPCO did not officially request that its customer provide the requested information until as late as March 29, 2010, or 26 days after the Department requested this information. Within 11 days thereafter, on April 9, 2010, TPCO informed the Department that its customer had agreed to provide the requested information, and that such information could be submitted to the Department in 10 days, on April 19, 2010. The record indicates that TPCO's delay in seeking the requested information accounts for as much as 26 days, which has prevented the Department from timely receiving the requested information. Once TPCO made the request, TPCO's customer agreed to provide the information and could have done so within as little as 21 days. Accordingly, we have preliminarily determined that TPCO failed to cooperate by putting forth its maximum effort to obtain the data and, hence, has not acted to the best of its ability to comply with a request for information. This has prevented the timely submission of the information such that even if the Department had further extended the deadline, such submission would have been too late for the Department to examine it for purposes of this preliminary determination. Therefore, for the preliminary determination, we have determined that it is appropriate to use adverse inferences in selecting the FA on which to base TPCO's dumping margin, in part. We have selected, as partial AFA, the highest control number-specific dumping margin calculated for TPCO. No corroboration of this rate is necessary because the information we are relying on as partial AFA was obtained in the course of this investigation and is not secondary information.

The PRC-Wide Entity

The Department has data indicating that there were more exporters of seamless pipe from the PRC than those responding to our request for Q&V information during the POI. *See* Respondent Selection Memorandum. We issued our request for Q&V information to 84 potential Chinese exporters of the merchandise under investigation, in addition to posting the Q&V questionnaire on the Department's Web site. While information on the record of this investigation indicates that there are other producers/exporters of seamless pipe in the PRC, we received only nine timely filed Q&V responses. *See id.* Although all exporters were given an opportunity to provide Q&V information, not all exporters provided a response to the Department's Q&V letter. Therefore, the Department has preliminarily determined that there were exporters/producers of the merchandise under investigation during the POI from the PRC that did not respond to the Department's request for information. We have treated these PRC producers/exporters as part of the PRC-wide entity because they did not qualify for a separate rate. *See, e.g., Preliminary Determination of Sales at Less Than Fair Value, Postponement of Final Determination, and Preliminary Partial Determination of Critical Circumstances: Diamond Sawblades and Parts Thereof From the People's Republic of China,* 70 FR 77121, 77128 (December 29, 2005), unchanged in *Final Determination of Sales at Less Than Fair Value and Final Partial Affirmative Determination of Critical Circumstances: Diamond Sawblades and Parts Thereof from the People's Republic of China,* 71 FR 29303 (May 22, 2006).

Section 776(a)(2) of the Act provides that the Department shall, subject to subsection 782(d) of the Act, use facts otherwise available in reaching the applicable determination if an interested party withholds information that has been requested by the Department. As noted above, the PRC-

[7] *See* SAA at 870.

[8] *See Nippon Steel Corporation v. United States,* 337 F.3d 1373, 1382 (Fed. Cir. 2003) ("*Nippon*").

[9] *Id.* at 1380.

[10] *Id.* at 1382.

wide entity withheld information requested by the Department. As a result, pursuant to section 776(a)(2)(A) of the Act, we find it appropriate to base the PRC-wide dumping margin on facts otherwise available. *See Notice of Preliminary Determination of Sales at Less Than Fair Value, Affirmative Preliminary Determination of Critical Circumstances and Postponement of Final Determination: Certain Frozen Fish Fillets From the Socialist Republic of Vietnam,* 68 FR 4986 (January 31, 2003), unchanged in *Notice of Final Antidumping Duty Determination of Sales at Less Than Fair Value and Affirmative Critical Circumstances: Certain Frozen Fish Fillets from the Socialist Republic of Vietnam,* 68 FR 37116 (June 23, 2003).

Section 776(b) of the Act provides that, in selecting from among the facts otherwise available, the Department may employ an adverse inference if an interested party fails to cooperate by not acting to the best of its ability to comply with requests for information. *See SAA* at 870. *See also, Certain Cold-Rolled Flat-Rolled Carbon-Quality Steel Products,* 65 FR 5510, 5518 (February 4, 2000). Since the PRC-wide entity did not respond to the Department's requests for information, the Department has concluded that the PRC-wide entity has failed to cooperate to the best of its ability. Therefore, the Department preliminarily finds that, in selecting from among the facts available, an adverse inference is appropriate.

Section 776(b) of the Act authorizes the Department to rely upon, as AFA: (1) Information derived from the petition; (2) the final determination from the LTFV investigation; (3) a previous administrative review; or (4) any other information placed on the record. In selecting a rate for AFA, the Department selects one that is sufficiently adverse "as to effectuate the purpose of the facts available rule to induce respondents to provide the Department with complete and accurate information in a timely manner." *See Notice of Final Determination of Sales at Less Than Fair Value: Static Random Access Memory Semiconductors From Taiwan,* 63 FR 8909 (February 23, 1998). It is the Department's practice to select, as AFA, the higher of: (a) the highest margin alleged in the petition or (b) the highest calculated rate for any respondent in the investigation, to the extent that it can be corroborated (assuming the rate is based on secondary information). *See Final Determination of Sales at Less Than Fair Value: Certain Cold-Rolled Carbon Quality Steel Products From the People's Republic of China,* 65 FR 34660 (May 31, 2000), and accompanying Issues and Decisions Memorandum at "Facts Available." In the instant investigation, as AFA, we have preliminarily assigned to the PRC-wide entity, the highest corroborated margin alleged in the Petition, which is 98.37 percent. The dumping margin for the PRC-wide entity applies to all entries of the merchandise under investigation except for entries of subject merchandise produced and exported by the SR Recipients.

Corroboration of Information

Section 776(c) of the Act provides that, when the Department relies on secondary information as facts available rather than on information obtained in the course of an investigation, it must, to the extent practicable, corroborate that information from independent sources reasonably at its disposal. Secondary information is described as "information derived from the petition that gave rise to the investigation or review, the final determination concerning merchandise subject to this investigation, or any previous review under section 751 concerning the merchandise subject to this investigation." [11] To "corroborate" means that the Department will satisfy itself that the secondary information to be used has probative value. Independent sources used to corroborate may include, for example, published price lists, official import statistics and customs data, and information obtained from interested parties during the particular investigation. To corroborate secondary information, the Department will, to the extent practicable, examine the reliability and relevance of the information used.[12]

The AFA rate that the Department used for the PRC-wide entity is from the Petition. Based on our examination of information on the record, including U.S. prices and NVs, we find that there is a sufficient basis to find that the Petition margin selected as the AFA rate, 98.37 percent, has probative value. In addition, since we have selected a margin that is within the range of CONNUM-specific margins calculated for the mandatory respondents in this proceeding, it can be considered to have probative value. *See* Hengyang and TPCO Analysis Memoranda. Petitioners' methodology for calculating the U.S. price and NV in the Petition is discussed in the *Initiation Notice.* Accordingly, we conclude that the highest Petition margin that can be corroborated within the meaning of the statute is 98.37 percent, which is sufficiently adverse so as to induce cooperation as an uncooperative party does not benefit from its failure to cooperate.[13]

Fair Value Comparisons

In accordance with section 777A(d)(1)(A)(i) of the Act, to determine whether the mandatory respondents TPCO and Hengyang sold seamless pipe to the United States at LTFV, we compared the weighted-average EP or constructed export price ("CEP") of seamless pipe, as appropriate, to the NV of seamless pipe, as described in the "U.S. Price," and "Normal Value" sections of this notice.

U.S. Price

TPCO

In accordance with section 772(b) of the Act, we based the U.S. price for TPCO's sales on CEP because these sales were made by TPCO's U.S. affiliates. In accordance with section 772(c)(2)(A) of the Act, we calculated CEP by deducting, where applicable, the following expenses from the starting price (gross unit price) charged to the first unaffiliated customer in the United States: Foreign movement expenses, international freight, marine insurance, and U.S. movement expenses, including brokerage and handling, U.S. duty, stevedore and inspection expenses. Further, in accordance with section 772(d)(1) of the Act and 19 CFR 351.402(b), where appropriate, we deducted from the starting price the following selling expenses associated with economic activities occurring in the United States: Credit expenses and indirect selling expenses. In addition, pursuant to section 772(d)(3) of the Act, we made an adjustment to the starting price for CEP profit. We based movement expenses on either surrogate values or actual expenses. For a detailed description of all adjustments, *see* TPCO

[11] *See Final Determination of Sales at Less Than Fair Value: Sodium Hexametaphosphate From the People's Republic of China,* 73 FR 6479, 6481 (February 4, 2008), quoting SAA at 870.

[12] *See Tapered Roller Bearings and Parts Thereof, Finished and Unfinished, From Japan, and Tapered Roller Bearings, Four Inches or Less in Outside Diameter, and Components Thereof, From Japan; Preliminary Results of Antidumping Duty Administrative Reviews and Partial Termination of Administrative Reviews,* 61 FR 57391, 57392 (November 6, 1996), unchanged in *Tapered Roller Bearings and Parts Thereof, Finished and Unfinished, From Japan, and Tapered Roller Bearings, Four Inches or Less in Outside Diameter, and Components Thereof, From Japan; Final Results of Antidumping Duty Administrative Reviews and Termination in Part,* 62 FR 11825 (March 13, 1997).

[13] *See Wire Decking from the People's Republic of China: Notice of Preliminary Determination of Sales at Less Than Fair Value and Postponement of Final Determination* 75 FR 1597, 1603 (January 12, 2010).

Analysis Memorandum, dated April 21, 2010.

Hengyang

In accordance with section 772(a) of the Act, we based the U.S. price for Hengyang's sales on EP because the subject merchandise was sold directly to the unaffiliated customers in the United States prior to importation, and the use of constructed export price was not otherwise warranted.

We calculated EP based on the packed cost and freight or delivered prices to unaffiliated purchasers in, or for exportation to, the United States. We made deductions, as appropriate, for the following movement expenses: Domestic inland freight, domestic brokerage and handling, international freight, and marine insurance. For details regarding our EP calculations, and for a complete discussion of the calculation of the U.S. price for Hengyang, see "Antidumping Duty Investigation of Seamless Carbon and Alloy Steel Standard, Line, and Pressure Pipe from the People's Republic of China: Hengyang Steel Tube Group Int'l Trading Inc., Hengyang Valin Steel Tube Co., Ltd., and Hengyang Valin MPM Tube Co., Ltd., Analysis Memorandum for the Preliminary Determination (April 21, 2010) ("Hengyang Analysis Memorandum").

Normal Value

Section 773(c)(1) of the Act provides that the Department shall determine NV using an FOP methodology if the merchandise is exported from a NME country and the information does not permit the calculation of NV using home-market prices, third-country prices, or constructed value under section 773(a) of the Act. Thus, in accordance with section 773(c)(1)(B) of the Act, because NV could not be determined under section 773(a) of the Act, we valued FOP based on the inputs employed by Hengyang to manufacture subject merchandise during the POI. Specifically, we calculated NV by adding together the value of the FOP, general expenses, profit, and packing costs.

In accordance with section 773(c) of the Act, we calculated NV based on the FOP reported by TPCO and Hengyang. We valued the FOP using prices and financial statements from the surrogate country, India. If market economy suppliers, who were paid in a market economy currency, supplied over 33 percent of the total volume of a material input purchased from all sources during the POI, pursuant to Department practice, we based the input value on the actual price charged by the supplier. *See Antidumping Methodologies: Market Economy Inputs, Expected Non-Market Economy Wages, Duty Drawback; and Request for Comments,* 71 FR 61716 (October 19, 2006); *Certain Cut-to-Length Carbon Steel Plate From the People's Republic of China: Final Results of the 2007–2008 Administrative Review of the Antidumping Duty Order,* 75 FR 8301 (Feb. 24, 2010) and accompanying Issues and Decision Memorandum at Comment 7. *See also* TPCO Analysis Memorandum and Hengyang Analysis Memorandum.

In selecting surrogate values, we followed, to the extent practicable, the Department's practice of choosing values which are non-export average values, contemporaneous with, or closest in time to, the POI, product-specific, and tax-exclusive. *See e.g., Notice of Preliminary Determination of Sales at Less Than Fair Value, Negative Preliminary Determination of Critical Circumstances and Postponement of Final Determination: Certain Frozen and Canned Warmwater Shrimp From the Socialist Republic of Vietnam,* 69 FR 42672, 42682 (July 16, 2004), unchanged in *Final Determination of Sales at Less Than Fair Value: Certain Frozen and Canned Warmwater Shrimp from the Socialist Republic of Vietnam,* 69 FR 71005 (December 8, 2004). We also considered the quality of the source of surrogate information in selecting surrogate values. *See, e.g., Tapered Roller Bearings and Parts Thereof, Finished or Unfinished, from the People's Republic of China: Preliminary Results of the 2007–2008 Administrative Review of the Antidumping Duty Order,* 74 FR 32539 (July 8, 2009), unchanged in *Tapered Roller Bearings and Parts Thereof, Finished and Unfinished, from the People's Republic of China: Final Results of the 2007–2008 Administrative Review of the Antidumping Duty Order,* 75 FR 844 (January 6, 2010).

We valued material inputs and packing materials by multiplying the amount of the factor consumed in producing subject merchandise by the average unit value ("AUV") of the factor. We derived the AUV of the factor from Indian import statistics. In addition, we added Chinese domestic freight costs to the surrogate costs that we calculated for material inputs. We calculated freight costs by multiplying surrogate freight rates by the shorter of the reported distance from the domestic supplier to the factory that produced the subject merchandise or the distance from the nearest seaport to the factory that produced the subject merchandise, as appropriate. This adjustment is in accordance with the CAFC's decision in *Sigma Corp.* v. *United States,* 117 F.3d 1401, 1407–1408 (Fed. Cir.1997). *See* Surrogate Value Memorandum. Where we could only obtain surrogate values that were not contemporaneous with the POI, we inflated (or deflated) the surrogate values using the Indian Wholesale Price Index (WPI) as published in the International Financial Statistics of the International Monetary Fund.

Further, in calculating surrogate values from Indian imports, we disregarded imports from Indonesia, South Korea, and Thailand because in other proceedings the Department found that these countries maintain broadly available, non-industry-specific export subsidies. *See Notice of Amended Final Determination of Sales at Less Than Fair Value: Certain Automotive Replacement Glass Windshields from the People's Republic of China,* 67 FR 11670 (March 15, 2002); *see also Notice of Final Determination of Sales at Less Than Fair Value and Negative Final Determination of Critical Circumstances: Certain Color Television Receivers From the People's Republic of China,* 69 FR 20594 and accompanying Issues and Decision Memorandum at Comment 7 (April 16, 2004).[14] Therefore, it is reasonable to infer based on information available that all exports to all markets from these countries may be subsidized, and we have not used prices from these countries in calculating the Indian import-based surrogate values.

We valued electricity using price data for small, medium, and large industries, as published by the Central Electricity Authority of the Government of India in its publication entitled "Electricity Tariff & Duty and Average Rates of Electricity Supply in India", dated March 2008. These electricity rates represent actual country-wide, publicly available information on tax-exclusive electricity rates charged to industries in India. As the rates listed in this source became effective on a variety of different dates, we are not adjusting the average

[14] In addition, we note that legislative history explains that the Department is not required to conduct a formal investigation to ensure that such prices are not subsidized. *See* Omnibus Trade and Competitiveness Act of 1988, Conference Report to accompany H.R. Rep. 100–576 at 590 (1988) reprinted in U.S.C.C.A.N. 1547, 1623–24. As such, it is the Department's practice to base its decision on information that is available to it at the time it makes its determination. *See e.g., Polyethylene Terephthalate Film, Sheet, and Strip from the People's Republic of China: Preliminary Determination of Sales at Less than Fair Value,* 73 FR 24552 (May 5, 2008), unchanged in *Polyethylene Terephthalate Film, Sheet, and Strip from the People's Republic of China: Final Determination of Sales at Less than Fair Value,* 73 FR 55039 (September 24, 2008).

value for inflation. *See* Surrogate Value Memorandum.

We valued natural gas using 2008–2009 data from the Gas Authority of India Ltd. Since the data are contemporaneous with the POI, we did not adjust the data for inflation.

For direct labor, indirect labor, and packing labor, consistent with 19 CFR 351.408(c)(3), we valued labor using the PRC regression-based wage rate as reported on Import Administration's home page, Import Library, Expected Wages of Selected NME Countries, revised in December 2009, available at *http://ia.ita.doc.gov/wages/index.html.* Since this regression-based wage rate does not separate the labor rates into different skill levels or types of labor, we have applied the same wage rate to all skill levels and types of labor reported by Hengyang. *See* Surrogate Value Memorandum.

We valued truck freight expenses using a per-unit average rate calculated from data on the infobanc Web site: *http://www.infobanc.com/logistics/logtruck.htm.* The logistics section of this Web site contains inland freight truck rates between many large Indian cities. The value is contemporaneous with the POI. *See* Surrogate Value Memorandum.

We valued brokerage and handling using a simple average of the brokerage and handling costs reported in public submissions filed in three antidumping duty cases. Specifically, we averaged the public brokerage and handling expenses reported by Navneet Publications (India) Ltd. in the 2007–2008 administrative review of certain lined paper products from India, Essar Steel Limited in the 2006–2007 antidumping duty administrative review of hot-rolled carbon steel flat products from India, and Himalaya International Ltd. in the 2005–2006 administrative review of certain preserved mushrooms from India. Since the resulting value is not contemporaneous with the POI, we inflated the rate using the WPI. *See* Surrogate Value Memorandum.

We valued international freight using purchase prices.

To value marine insurance, the Department used data from RGJ Consultants (*http://www.rjgconsultants.com/*). This source provides information regarding the per-value rates of marine insurance of imports and exports to/from various countries. *See* Surrogate Value Memorandum.

We valued factory overhead, selling, general, and administrative ("SG&A") expenses, and profit using the financial statements of ISMT (FY 2008–2009), provided in Exhibit SV–44 of TPCO's February 16, 2010, submission, OCTL (FY 2008–2009), provided in Exhibit 1 of Hengyang's February 12, 2010, submission, and Tata (FY 2008–2009), provided in Exhibit SV–1 of Petitioners' January 20, 2010. *See* Surrogate Value Memorandum. As discussed below, we found all three financial statements to be complete, legible, publicly-available, contemporaneous with the POI, and from producers of either identical or comparable merchandise. However, while all three of the financial statements at issue are contemporaneous, none of them meet all of the Department's criteria. For example, while Hengyang and TPCO are not as integrated as Tata in that neither conduct their own mining, both are much more integrated than OCTL, whose primary input is formed pipes and tubes. Further, we found that two of the three potential surrogate companies, ISMT and Tata, benefitted from actionable subsidies during this period. When the Department has reason to believe or suspect that a company may have received countervailable subsidies, financial ratios derived from that company's financial statements may not constitute the best available information with which to calculate surrogate financial ratios. Nevertheless, the Department has used financial statements with some evidence of subsidies when the circumstances of the particular case warranted. *See e.g., Freshwater Crawfish Tail Meat from the People's Republic of China: Notice of Final Results And Rescission, In Part, of 2004/2005 Antidumping Duty Administrative and New Shipper Reviews,* 72 FR 19174 (April 17, 2007) and accompanying Issues and Decision Memorandum at Comment 1. In this case, we have determined that solely relying on the financial statement of OCTL, a statement that does not evidence actionable subsidies, would not constitute the best available information in selecting surrogate financial ratios since it would not reflect expenses incurred to produce steel. Therefore, given the Department's preference for using multiple financial statements in order to determine surrogate financial ratios for manufacturing overhead, SG&A expenses, and profit, the Department has used the average of the audited financial statements of all three Indian producers, ISMT, OCTL and Tata, to calculate surrogate financial ratios for TPCO and Hengyang for purposes of the preliminary determination.

In accordance with 19 CFR 351.301(c)(3)(i), interested parties may submit publicly available information with which to value FOP in the final determination within 40 days after the date of publication of the preliminary determination.

Verification

As provided in section 782(i)(1) of the Act, we intend to verify the information upon which we will rely in making our final determination.

Combination Rates

In the *Initiation Notice,* the Department stated that it would calculate combination rates for certain respondents that are eligible for a separate rate in this investigation. *See Initiation Notice,* 75 FR at 52748. This change in practice is described in *Policy Bulletin 05.1: Separate Rates Practice and Application of Combination Rates in Antidumping Investigations Involving Non-Market Economy Countries,* available at *http://ia.ita.doc.gov/.*

Preliminary Determination

The Department preliminarily determines that the weighted-average dumping margins are as follows:

Exporter and producer	Weighted-average margin (percent)
Tianjin Pipe International Economic and Trading Corporation. Produced by: Tianjin Pipe (Group) Corporation	32.39
Hengyang Steel Tube Group Int'l Trading Inc. Produced by: Hengyang Valin Steel Tube Co., Ltd., and Hengyang Valin MPM Tube Co., Ltd	91.93
Xigang Seamless Steel Tube Co., Ltd. Produced by: Xigang Seamless Steel Tube Co., Ltd., and Wuxi Seamless Special Pipe Co., Ltd	62.16
Jiangyin City Changjiang Steel Pipe Co., Ltd. Produced by: Jiangyin City Changjiang Steel Pipe Co., Ltd	62.16
Pangang Group Chengdu Iron & Steel Co., Ltd. Produced by: Pangang Group Chengdu Iron & Steel Co., Ltd	62.16
Yangzhou Lontrin Steel Tube Co., Ltd. Produced by: Yangzhou Lontrin Steel Tube Co., Ltd	62.16

Exporter and producer	Weighted-average margin (percent)
Yangzhou Chengde Steel Tube Co., Ltd. Produced by: Yangzhou Chengde Steel Tube Co., Ltd	62.16
PRC-Wide Rate	98.37

Disclosure

We will disclose the calculations performed within five days of the date of publication of this notice to parties in this proceeding in accordance with 19 CFR 351.224(b).

Suspension of Liquidation

As noted above, the Department has found that critical circumstances exist with respect to imports of subject merchandise from Hengyang and the PRC-wide entity, but not with respect to TPCO and the separate rate applicants, including Xigang. Therefore, in accordance with section 733(d) of the Act, we will instruct U.S. Customs and Border Protection ("CBP") to suspend liquidation of all entries of seamless pipe from Hengyang and the PRC-wide entity entered, or withdrawn from warehouse, for consumption on or after 90 days prior to the date of publication of this notice in the **Federal Register**. We will instruct CBP to suspend liquidation of all entries of seamless pipe from TPCO and the Chinese SR Applicants [15] entered, or withdrawn from warehouse, for consumption on or after the date of publication of this notice in the **Federal Register**. Also, we will instruct CBP to require a cash deposit or the posting of a bond equal to the weighted-average amount by which the NV exceeds U.S. price, as indicated above.

Additionally, as the Department has determined that the merchandise under investigation, exported by TPCO and Hengyang, benefitted from an export subsidy, we will instruct CBP to require an AD cash deposit or posting of a bond equal to the weighted-average amount by which the NV exceeds the U.S. export price, as indicated above, reduced by the export subsidy determined for TPCO and Hengyang in the companion countervailing duty investigation. *See Certain Seamless Carbon and Alloy Steel Standard, Line, and Pressure Pipe From the People's Republic of China: Preliminary Affirmative Countervailing Duty Determination, Preliminary Affirmative Critical Circumstances Determination,* 75 FR 9163 (March 1, 2010) ("*CVD Prelim*"); *also see, e.g., Notice of Final Determination of Sales at Less Than Fair Value: Carbazole Violet Pigment 23 From India,* 69 FR 67306, 67307 (November 17, 2007). We will assign the average cash deposit rate, adjusted for the export subsidies from the *CVD Prelim,* to the Chinese SR Applicants. The suspension of liquidation instructions will remain in effect until further notice.

International Trade Commission Notification

In accordance with section 733(f) of the Act, we will notify the ITC of our preliminary affirmative determination of sales at LTFV. Section 735(b)(2) of the Act requires the ITC to make its final determination as to whether the domestic industry in the United States is materially injured, or threatened with material injury, by reason of imports of seamless pipe, or sales (or the likelihood of sales) for importation, of the subject merchandise under investigation within 45 days of our final determination.

Public Comment

Case briefs or other written comments may be submitted to the Assistant Secretary for Import Administration no later than seven days after the date the final verification report is issued in this proceeding and rebuttal briefs, limited to issues raised in case briefs, no later than five days after the deadline for submitting case briefs. *See* 19 CFR 351.309(c)(1)(i) and (d)(1). A list of authorities used and an executive summary of issues should accompany any briefs submitted to the Department. This summary should be limited to five pages total, including footnotes.

In accordance with section 774 of the Act, we will hold a public hearing, if requested, to afford interested parties an opportunity to comment on arguments raised in case or rebuttal briefs. If a request for a hearing is made, we intend to hold the hearing three days after the deadline of submission of rebuttal briefs at the U.S. Department of Commerce, 14th Street and Constitution Ave, NW., Washington, DC 20230, at a time and in a room to be determined. Parties should confirm by telephone the date, time, and location of the hearing two days before the scheduled date.

Interested parties that wish to request a hearing, or to participate if one is requested, must submit a written request to the Assistant Secretary for Import Administration, U.S. Department of Commerce, Room 1870, within 30 days after the date of publication of this notice. *See* 19 CFR 351.310(c). Requests should contain the party's name, address, and telephone number, the number of participants, and a list of the issues to be discussed. At the hearing, each party may make an affirmative presentation only on issues raised in that party's case brief and may make rebuttal presentations only on arguments included in that party's rebuttal brief.

Postponement of Final Determination and Extension of Provisional Measures

Pursuant to section 735(a)(2) of the Act, on April 9, 2010, TPCO and Hengyang requested that in the event of an affirmative preliminary determination in this investigation, the Department postpone its final determination by 60 days and extend the application of the provisional measures prescribed under 19 CFR 351.210(e)(2) from a 4-month period to a 6-month period. In accordance with section 733(d) of the Act and 19 CFR 351.210(b), we are granting the request and are postponing the final determination until no later than 135 days after the publication of this notice in the **Federal Register** because: (1) Our preliminary determination is affirmative, (2) the requesting exporter accounts for a significant proportion of exports of the subject merchandise, and (3) no compelling reasons for denial exist. Suspension of liquidation will be extended accordingly.

This determination is issued and published in accordance with sections 733(f) and 777(i)(1) of the Act.

Dated: April 21, 2010.

Ronald K. Lorentzen,

Deputy Assistant Secretary for Import Administration.

[FR Doc. 2010–9858 Filed 4–27–10; 8:45 am]

BILLING CODE 3510–DS–P

[15] As noted above, the Chinese SR Applicants are Jiangyin City Changjiang Steel Pipe Co., Ltd., Pangang Group Chengdu Iron & Steel Co., Ltd., Yangzhou Lontrin Steel Tube Co., Ltd., Yangzhou Chengde Steel Pipe Co., Ltd. and the Xigang companies (Xigang Seamless Steel Tube Co., Ltd., and Wuxi Seamless Special Pipe Co., Ltd.).

DEPARTMENT OF COMMERCE

International Trade Administration

[A–427–801, A–428–801, A–475–801, A–588–804, A–412–801]

Ball Bearings and Parts Thereof From France, Germany, Italy, Japan, and the United Kingdom: Preliminary Results of Antidumping Duty Administrative Reviews, Preliminary Results of Changed-Circumstances Review, Rescission of Antidumping Duty Administrative Reviews in Part, and Intent To Revoke Order In Part

AGENCY: Import Administration, International Trade Administration, Department of Commerce.

SUMMARY: In response to requests from interested parties, the Department of Commerce (the Department) is conducting administrative reviews of the antidumping duty orders on ball bearings and parts thereof from France, Germany, Italy, Japan, and the United Kingdom for the period May 1, 2008, through April 30, 2009. We have preliminarily determined that sales have been made below normal value by certain companies subject to these reviews. We have also preliminarily determined that myonic GmbH, a firm covered by the administrative review of the order on ball bearings from Germany, is the successor-in-interest to the pre-acquisition myonic GmbH. We are also rescinding the administrative reviews in part for certain firms for which the requests for review of these firms were withdrawn in a timely manner. Finally, we are announcing our intent to revoke the order on ball bearings and parts thereof from the United Kingdom in part with respect to subject merchandise exported and/or sold by Barden/Schaeffler UK to the United States.

We invite interested parties to comment on these preliminary results. Parties who submit comments in these reviews are requested to submit with each argument (1) a statement of the issue and (2) a brief summary of the argument.

DATES: *Effective Date:* April 28, 2010.

FOR FURTHER INFORMATION CONTACT: Richard Rimlinger, AD/CVD Operations, Office 5, Import Administration, International Trade Administration, U.S. Department of Commerce, 14th Street and Constitution Avenue, NW., Washington, DC 20230; telephone: (202) 482–4477.

SUPPLEMENTARY INFORMATION:

Background

On May 15, 1989, the Department published the antidumping duty orders on ball bearings and parts thereof from France (54 FR 20902), Germany (54 FR 20900), Italy (54 FR 20903), Japan (54 FR 20904), and the United Kingdom (54 FR 20910) in the **Federal Register**. On June 24, 2009, in accordance with 19 CFR 351.213(b), we published a notice of initiation of administrative reviews of 29 companies subject to these orders. *See Initiation of Antidumping and Countervailing Duty Administrative Reviews and Requests for Revocation in Part,* 74 FR 30052 (June 24, 2009).

On January 14, 2010, we extended the due date for the completion of these preliminary results of reviews from February 1, 2010, to April 14, 2010.[1] *See Ball Bearings and Parts Thereof from France, et al.: Extension of Time Limit for Preliminary Results of Antidumping Duty Administrative Reviews*, 75 FR 2108 (January 14, 2010) *(Extension Notice).*

As explained in Memorandum from the Deputy Assistant Secretary for Import Administration, the Department has exercised its discretion to toll deadlines for the duration of the closure of the Federal Government from February 5 through February 12, 2010. Thus, all deadlines in these segments of the five proceedings have been extended by seven days. The revised deadline for the preliminary results of these antidumping administrative reviews is now April 21, 2010. See Memorandum to the Record from Ronald Lorentzen, DAS for Import Administration, regarding "Tolling of Administrative Deadlines As a Result of the Government Closure During the Recent Snowstorm," dated February 12, 2010.

The period of review is May 1, 2008, through April 30, 2009. The Department is conducting these administrative reviews in accordance with section 751 of the Tariff Act of 1930, as amended (the Act).

Scope of the Orders

The products covered by the orders are ball bearings and parts thereof. These products include all antifriction bearings that employ balls as the rolling element. Imports of these products are classified under the following categories: Antifriction balls, ball bearings with integral shafts, ball bearings (including radial ball bearings) and parts thereof, and housed or mounted ball bearing units and parts thereof.

Imports of these products are classified under the following Harmonized Tariff Schedule of the United States (HTSUS) subheadings: 3926.90.45, 4016.93.10, 4016.93.50, 6909.19.50.10, 8431.20.00, 8431.39.00.10, 8482.10.10, 8482.10.50, 8482.80.00, 8482.91.00, 8482.99.05, 8482.99.35, 8482.99.25.80, 8482.99.65.95, 8483.20.40, 8483.20.80, 8483.30.40, 8483.30.80, 8483.50.90, 8483.90.20, 8483.90.30, 8483.90.70, 8708.50.50, 8708.60.50, 8708.60.80, 8708.93.30, 8708.93.60.00, 8708.99.06, 8708.99.31.00, 8708.99.40.00, 8708.99.49.60, 8708.99.58, 8708.99.80.15, 8708.99.80.80, 8803.10.00, 8803.20.00, 8803.30.00, 8803.90.30, 8803.90.90, 8708.30.50.90, 8708.40.75.70, 8708.40.75.80, 8708.50.79.00, 8708.50.89.00, 8708.50.91.50, 8708.50.99.00, 8708.70.60.60, 8708.80.65.90, 8708.93.75.00, 8708.94.75, 8708.95.20.00, 8708.99.55.00, 8708.99.68, and 8708.99.81.80.

Although the HTSUS item numbers above are provided for convenience and customs purposes, the written descriptions of the scope of the orders remain dispositive.

The size or precision grade of a bearing does not influence whether the bearing is covered by one of the orders. The orders cover all the subject bearings and parts thereof (inner race, outer race, cage, rollers, balls, seals, shields, *etc.*) outlined above with certain limitations. With regard to finished parts, all such parts are included in the scope of the orders. For unfinished parts, such parts are included if they have been heat-treated or if heat treatment is not required to be performed on the part. Thus, the only unfinished parts that are not covered by the orders are those that will be subject to heat treatment after importation. The ultimate application of a bearing also does not influence whether the bearing is covered by the orders. Bearings designed for highly specialized applications are not excluded. Any of the subject bearings, regardless of whether they may ultimately be utilized in aircraft, automobiles, or other equipment, are within the scope of the orders.

For a list of scope determinations which pertain to the orders, see the "Memorandum to Laurie Parkhill" regarding scope determinations for the 2008/2009 reviews, dated April 21, 2010, which is on file in the Central Records Unit (CRU) of the main

[1] The original statutory due date for the preliminary results was Sunday, January 31, 2010. In the *Extension Notice,* we calculated 73 days from Monday, February 1, 2010, and stated that "we are extending the time period for issuing the preliminary results of these reviews by 73 days until April 15, 2010." The 73rd day from the original statutory due date is April 14, 2010.

Commerce building, room 1117, in the General Issues record (A–100–001).

Rescission of Reviews in Part

In accordance with 19 CFR 351.213(d), the Department will rescind an administrative review in part "if a party that requested a review withdraws the request within 90 days of the date of the publication of notice of initiation of the requested review." Subsequent to the initiation of these reviews, we received timely withdrawals of the requests we had received for the reviews as follows:

Country	Company
France	SNR Roulements (SNR).
Germany	RWG Frankenjura-Industrie Flugwerklager GmbH.
	SNR Walzlager GmbH.
Japan	Asahi Seiko Co. Ltd.
	Nippon Pillow Block Co., Ltd.
	Japanese Aero Engine Bearings Corporation.

Because there are no other requests for review of the above-named firms, we are rescinding the reviews with respect to these companies in accordance with 19 CFR 351.213(d)(1).

In addition, on August 31, 2009, the Department revoked, in part, the antidumping duty order on ball bearings and parts thereof from Germany as it applies to all subject merchandise exported and/or sold by Gebrüder Reinfurt GmbH & Co. KG (GRW). *See Ball Bearings and Parts Thereof From France, et al.: Final Results of Antidumping Duty Administrative Reviews and Revocation of an Order in Part,* 74 FR 44819, 44820 (August 31, 2009). The effective date of the revocation is May 1, 2008. Therefore, we are also rescinding the review of the 2008/2009 period with respect to GRW.

Selection of Respondents

Due to the large number of companies in the reviews and the resulting administrative burden to review each company for which a request had been made and not withdrawn, the Department exercised its authority to limit the number of respondents selected for individual examination in these reviews. Where it is not practicable to examine all known exporters/producers of subject merchandise because of the large number of such companies, section 777A(c)(2) of the Act allows the Department to limit its examination to either a sample of exporters, producers, or types of products that is statistically valid, based on the information available at the time of selection, or exporters and producers accounting for the largest volume of subject merchandise from the exporting country that can be reasonably examined.

Accordingly, in June 2009 we requested information concerning the quantity and value of sales to the United States from the 29 exporters/producers for which we had initiated reviews. We received responses from all of the exporters/producers by July 2009. Some of the companies withdrew their requests for review prior to our selection of respondents for individual examination. Based on our analysis of the responses and our available resources, we chose to examine the sales of certain companies. See Memorandum to Laurie Parkhill, dated July 31, 2009, for the detailed analysis of the selection process for each country-specific review. We selected the following companies for individual examination:

Country	Company
France	SKF France.
	SNR.[2]
Germany	Schaeffler KG.
	myonic GmbH (myonic).
Italy	Schaeffler Italia S.r.l. (formerly FAG Italia S.p.A.).
	SKF Industrie S.p.A./ Somecat S.p.A. (SKF Italy).
Japan	NTN Corporation.
	NSK Ltd.
United Kingdom	Barden/Schaeffler UK.
	NSK Bearings Europe Ltd. (NSK U.K.).

Non-Selected Respondents

For responding companies under review of the orders on merchandise from Germany and Japan that were not individually examined, we have assigned the simple-average margin of the two selected respondents in each respective review. Therefore, we have applied, for these preliminary results, the rate of 11.94 percent (Germany) and the rate of 10.97 percent (Japan) to the firms not individually examined in the respective reviews. *See* Memorandum to the File entitled "Calculation of Simple-Average Margins" under A–100–001 in the CRU.

With respect to the responding company which remains under review and which we did not select for individual examination in the review of the order on subject merchandise from France (Microturbo SAS), we have assigned the margin we have calculated for SKF France of 6.86 percent to this firm. With respect to the responding companies which remain under review and which we did not select for individual examination in the review of the order on subject merchandise from the United Kingdom (SKF UK; Timken UK Ltd. and Timken Aerospace UK Ltd.), we have disregarded the *de minimis* margin we calculated for Barden/Schaeffler UK and assigned the margin we have calculated for NSK U.K. of 6.85 percent to these firms.

Verification

As provided in section 782(i) of the Act, we have verified information provided by the following companies: Myonic; Schaeffler Italia S.r.l.; SKF Italy; NTN Corporation; Barden/ Schaeffler UK; NSK U.K.

We conducted these verifications using standard verification procedures including the examination of relevant sales and financial records and the selection and review of original documentation containing relevant information. Our verification results are outlined in the public versions of our verification reports which are on file in CRU, room 1117 of the main Department building.

Export Price and Constructed Export Price

For the price to the United States, we used export price (EP) or constructed export price (CEP) as defined in sections 772(a) and (b) of the Act, as appropriate. Due to the extremely large volume of U.S. transactions that occurred during the period of review and the resulting administrative burden involved in calculating individual margins for all of these transactions, we sampled CEP sales in accordance with section 777A of the Act. When a selected firm made more than 10,000 CEP sales transactions to the United States of merchandise subject to a particular order, we reviewed CEP sales that occurred during sample weeks. We selected one week from each two-month period in the review period, for a total of six weeks, and analyzed each transaction made in those six weeks. The sample weeks are as follows: June 22, 2008–June 28, 2008; August 10, 2008–August 16, 2008; August 31, 2008–September 6, 2008; November 16, 2008–November 22, 2008; February 1, 2009–February 7, 2009; April 26, 2009–April 30, 2009. We reviewed all EP sales transactions which the respondents we selected for individual examination made during the period of review.

We calculated EP and CEP based on the packed F.O.B., C.I.F., or delivered price to unaffiliated purchasers in, or for exportation to, the United States. We

[2] Request withdrawn; *see* "Rescission of Reviews in Part" section above.

made deductions, as appropriate, for discounts and rebates. See 19 CFR 351.401(c) and 351.102(b)(38). We also made deductions for any movement expenses in accordance with section 772(c)(2)(A) of the Act.

Certain companies received freight revenues or packing revenues from the customer for certain U.S. sales. In *Certain Orange Juice from Brazil: Final Results and Partial Rescission of Antidumping Duty Administrative Review,* 73 FR 46584 (August 11, 2008) (*OJ Brazil*), and accompanying Issues and Decision Memorandum at Comment 7, and *Polyethylene Retail Carrier Bags from the People's Republic of China: Final Results of Antidumping Duty Administrative Review,* 74 FR 6857 (February 11, 2009) (*PRC Bags*), and accompanying Issues and Decision Memorandum at Comment 6, the Department determined to treat such revenues as an offset to the specific expenses for which they were intended to compensate. Accordingly, we have used these respondents' revenues as an offset to their respective expenses.

Consistent with section 772(d)(1) of the Act, we calculated CEP by deducting selling expenses associated with economic activities occurring in the United States which includes commissions, direct selling expenses, and U.S. repacking expenses. In accordance with section 772(d)(1) of the Act, we also deducted those indirect selling expenses associated with economic activities occurring in the United States and the profit allocated to expenses deducted under section 772(d)(1) of the Act in accordance with sections 772(d)(3) and 772(f) of the Act. In accordance with section 772(f) of the Act, we computed profit based on the total revenues realized on sales in both the U.S. and home markets, less all expenses associated with those sales. We then allocated profit to expenses incurred with respect to U.S. economic activity based on the ratio of total U.S. expenses to total expenses for both the U.S. and home markets. Finally, we made an adjustment for profit allocated to these expenses in accordance with section 772(d)(3) of the Act.

With respect to subject merchandise to which value was added in the United States prior to sale to unaffiliated U.S. customers, *e.g.*, parts of bearings that were imported by U.S. affiliates of foreign exporters and then further processed into other products which were then sold to unaffiliated parties, we determined that the special rule for merchandise with value added after importation under section 772(e) of the Act applied to all firms that added value in the United States with the exception of myonic.

Section 772(e) of the Act provides that, when the subject merchandise is imported by an affiliated person and the value added in the United States by the affiliated person is likely to exceed substantially the value of the subject merchandise, we shall determine the CEP for such merchandise using the price of identical or other subject merchandise sold by the exporter or producer to an unaffiliated customer if there is a sufficient quantity of sales to provide a reasonable basis for comparison and we determine that the use of such sales is appropriate. If there is not a sufficient quantity of such sales or if we determine that using the price of identical or other subject merchandise is not appropriate, we may use any other reasonable basis to determine CEP.

To determine whether the value added is likely to exceed substantially the value of the subject merchandise, we estimated the value added based on the difference between the averages of the prices charged to the first unaffiliated purchaser for the merchandise as sold in the United States and the averages of the prices paid for the subject merchandise by the affiliated purchaser. Based on this analysis, we determined that the estimated value added in the United States by the further-manufacturing firms accounted for at least 65 percent of the price charged to the first unaffiliated customer for the merchandise as sold in the United States. See 19 CFR 351.402(c) for an explanation of our practice on this issue. Therefore, we preliminarily determine that the value added is likely to exceed substantially the value of the subject merchandise for NTN Corporation, NSK Ltd., NSK U.K., SKF France, SKF Italy, and Schaeffler KG. Also, for these firms, we determine that there was a sufficient quantity of sales remaining to provide a reasonable basis for comparison and that the use of these sales is appropriate. For the analysis of the decision not to require further-manufactured data, see the Department's company-specific preliminary analysis memoranda dated April 21, 2010. Accordingly, for purposes of determining dumping margins for the sales subject to the special rule, we have used the weighted-average dumping margins calculated on sales of identical or other subject merchandise sold to unaffiliated persons.

For myonic, we determined that the special rule did not apply because the value added in the United States did not exceed substantially the value of the subject merchandise. Consequently, myonic submitted a complete response to our further-manufacturing questionnaire which included the costs of the further processing performed by myonic Inc. in the United States. We analyzed these sales in the same manner as non-further-manufactured products but deducted the value of further manufacturing incurred in the United States and an amount for profit attributable to the further manufacturing. We used the data reported in myonic's response to calculate the further-manufacturing expense which we deducted from U.S. prices.

There were no other claimed or allowed adjustments to EP or CEP sales by the respondents.

Home-Market Sales

Based on a comparison of the aggregate quantity of home-market and U.S. sales and absent any information that a particular market situation in the exporting country did not permit a proper comparison, we determined that the quantity of foreign like product sold by all respondents in the exporting country was sufficient to permit a proper comparison with the sales of the subject merchandise to the United States pursuant to section 773(a)(1) of the Act. Each company's quantity of sales in its home market was greater than five percent of its sales to the U.S. market. Therefore, in accordance with section 773(a)(1)(B)(i) of the Act, we based normal value on the prices at which the foreign like product was first sold for consumption in the exporting country in the usual commercial quantities and in the ordinary course of trade and, to the extent practicable, at the same level of trade as the EP or CEP sales.

Due to the extremely large number of home-market transactions that occurred during the period of review and the resulting administrative burden involved in examining all of these transactions, we sampled sales to calculate normal value in accordance with section 777A of the Act. When a selected firm had more than 10,000 home-market sales transactions on a country-specific basis, we used sales in sample months that corresponded to the sample weeks which we selected for U.S. CEP sales, sales in a month prior to the period of review, and sales in the month following the period of review. The sample months were February 2008, June 2008, August 2008, September 2008, November 2008, February 2009, April 2009, and June 2009.

The Department may calculate normal value based on a sale to an affiliated party only if it is satisfied that the price to the affiliated party is comparable to the price at which sales are made to parties not affiliated with the exporter or producer, *i.e.*, sales were made at arm's-length prices. See 19 CFR 351.403(c). We excluded from our analysis sales to affiliated customers for consumption in the home market that we determined not to be at arm's-length prices. To test whether these sales were made at arm's-length prices, we compared the prices of sales of comparable merchandise to affiliated and unaffiliated customers, net of all rebates, movement charges, direct selling expenses, and packing. Pursuant to 19 CFR 351.403(c) and in accordance with our practice, when the prices charged to an affiliated party were, on average, between 98 and 102 percent of the prices charged to unaffiliated parties for merchandise comparable to that sold to the affiliated party, we determined that the sales to the affiliated party were at arm's-length prices. *See Antidumping Proceedings: Affiliated Party Sales in the Ordinary Course of Trade,* 67 FR 69186 (November 15, 2002). We included in our calculation of normal value those sales to affiliated parties that were made at arm's-length prices. See company-specific preliminary analysis memoranda dated April 21, 2010.

Cost of Production

In accordance with section 773(b) of the Act, in the last completed segment of the relevant country-specific proceeding we disregarded below-cost sales for NTN Corporation, NSK Ltd., SKF France, SKF Italy, Schaeffler Italia S.r.l., Schaeffler KG, NSK U.K., and Barden/Schaeffler UK. Furthermore, based on an allegation from The Timken Company that myonic was making sales in its home market at below-cost prices, we initiated a cost-of-production (COP) investigation concerning myonic's home-market sales. See Memorandum to Laurie Parkhill dated November 16, 2009. Therefore, for the instant reviews, we have reasonable grounds to believe or suspect that sales by all of the above companies of the foreign like product under consideration for the determination of normal value in these reviews may have been made at prices below the COP as provided by section 773(b)(2)(A)(ii) of the Act. Pursuant to section 773(b)(1) of the Act, we conducted COP investigations of sales by these firms in the respective home markets.

In accordance with section 773(b)(3) of the Act, we calculated the COP based on the sum of the costs of materials and fabrication employed in producing the foreign like product, the selling, general, and administrative (SG&A) expenses, and all costs and expenses incidental to packing the merchandise. In our COP analysis, we used the home-market sales and COP information provided by each respondent in its questionnaire responses or, in the case of Schaeffler Italia S.r.l., its largest supplier.

After calculating the COP and in accordance with section 773(b)(1) of the Act, we tested whether home-market sales of the foreign like product were made at prices below the COP within an extended period of time in substantial quantities and whether such prices permitted the recovery of all costs within a reasonable period of time. We compared model-specific COPs to the reported home-market prices less any applicable movement charges, discounts, and rebates.

Pursuant to section 773(b)(2)(C) of the Act, when less than 20 percent of a respondent's sales of a given product were at prices less than the COP, we did not disregard any below-cost sales of that product because the below-cost sales were not made in substantial quantities within an extended period of time. When 20 percent or more of a respondent's sales of a given product during the period of review were at prices less than the COP, we disregarded the below-cost sales because they were made in substantial quantities within an extended period of time pursuant to sections 773(b)(2)(B) and (C) of the Act and because, based on comparisons of prices to weighted-average COPs for the period of review, we determined that these sales were at prices which would not permit recovery of all costs within a reasonable period of time in accordance with section 773(b)(2)(D) of the Act. Based on this test, we disregarded below-cost sales with respect to NTN Corporation, NSK Ltd., SKF France, SKF Italy, Schaeffler Italia S.r.l., myonic, Schaeffler KG, NSK U.K., and Barden/Schaeffler UK. See the relevant company-specific preliminary analysis memoranda dated April 21, 2010.

Model-Match Methodology

For all respondents, where possible, we compared U.S. sales with sales of the foreign like product in the home market. Specifically, in making our comparisons, if an identical home-market model was reported, we made comparisons to weighted-average home-market prices that were based on all sales which passed the COP test of the identical product during the relevant month. We calculated the weighted-average home-market prices on a level of trade-specific basis. If there were no contemporaneous sales of an identical model, we identified the most similar home-market model.

To determine the most similar model, we limited our examination to models sold in the home market that had the same bearing design, load direction, number of rows, and precision grade. Next, we calculated the sum of the deviations (expressed as a percentage of the value of the U.S. model's characteristics) of the inner diameter, outer diameter, width, and load rating for each potential home-market match and selected the bearing with the smallest sum of the deviations. If two or more bearings had the same sum of the deviations, we selected the model that was sold at the same level of trade as the U.S. sale and was the closest contemporaneous sale to the U.S. sale. If two or more models were sold at the same level of trade and were sold equally contemporaneously, we selected the model with the smallest difference-in-merchandise adjustment.

Finally, if no bearing sold in the home market had a sum of the deviations that was less than 40 percent, we concluded that no appropriate comparison existed in the home market. For a full discussion of the model-match methodology we have used in these reviews, see *Ball Bearings and Parts Thereof from France, et al.: Final Results of Antidumping Duty Administrative Reviews,* 70 FR 54711 (September 16, 2005), and accompanying Issues and Decision Memorandum at Comments 2, 3, and 5 and *Antifriction Bearings and Parts Thereof from France, et al.: Preliminary Results and Partial Rescission of Antidumping Duty Administrative Reviews,* 70 FR 25538, 25542 (May 13, 2005).

Normal Value

Home-market prices were based on the packed, ex-factory, or delivered prices to affiliated or unaffiliated purchasers. When applicable, we made adjustments for differences in packing and for movement expenses in accordance with sections 773(a)(6)(A) and (B) of the Act. Where companies received freight or packing revenues from the home-market customer, we offset these expenses in accordance with *OJ Brazil* and *PRC Bags* as discussed above. We also made adjustments for differences in cost attributable to differences in physical characteristics of the merchandise pursuant to section 773(a)(6)(C)(ii) of the Act and 19 CFR 351.411 and for differences in circumstances of sale in accordance

with section 773(a)(6)(C)(iii) of the Act and 19 CFR 351.410. For comparisons to EP, we made circumstance-of-sale adjustments by deducting home-market direct selling expenses from, and adding U.S. direct selling expenses to, normal value. For comparisons to CEP, we made circumstance-of-sale adjustments by deducting home-market direct selling expenses from normal value. We also made adjustments, when applicable, for home-market indirect selling expenses to offset U.S. commissions in EP and CEP calculations.

In accordance with section 773(a)(1)(B)(i) of the Act, we based normal value, to the extent practicable, on sales at the same level of trade as the EP or CEP. If normal value was calculated at a different level of trade, we made an adjustment, if appropriate and if possible, in accordance with section 773(a)(7)(A) of the Act. See "Level of Trade" section below.

Constructed Value

In accordance with section 773(a)(4) of the Act, we used constructed value as the basis for normal value when there were no usable sales of the foreign like product in the comparison market. We calculated constructed value in accordance with section 773(e) of the Act. We included the cost of materials and fabrication, SG&A expenses, U.S. packing expenses, and profit in the calculation of constructed value. In accordance with section 773(e)(2)(A) of the Act, we based SG&A expenses and profit on the amounts incurred and realized by each respondent in connection with the production and sale of the foreign like product in the ordinary course of trade for consumption in the home market.

When appropriate, we made adjustments to constructed value in accordance with section 773(a)(8) of the Act, 19 CFR 351.410, and 19 CFR 351.412 for circumstance-of-sale differences and level-of-trade differences. For comparisons to EP, we made circumstance-of-sale adjustments by deducting home-market direct selling expenses from and adding U.S. direct selling expenses to constructed value. For comparisons to CEP, we made circumstance-of-sale adjustments by deducting home-market direct selling expenses from constructed value. We also made adjustments, when applicable, for home-market indirect selling expenses to offset U.S. commissions in EP and CEP comparisons.

When possible, we calculated constructed value at the same level of trade as the EP or CEP. If constructed value was calculated at a different level of trade, we made an adjustment, if appropriate and if possible, in accordance with sections 773(a)(7) and (8) of the Act.

Level of Trade

To the extent practicable, we determined normal value for sales at the same level of trade as the U.S. sales (either EP or CEP). When there were no sales at the same level of trade, we compared U.S. sales to home-market sales at a different level of trade. The normal-value level of trade is that of the starting-price sales in the home market. When normal value is based on constructed value, the level of trade is that of the sales from which we derived SG&A and profit.

To determine whether home-market sales were at a different level of trade than U.S. sales, we examined stages in the marketing process and selling functions along the chain of distribution between the producer and the unaffiliated customer. If the home-market sales were at a different level of trade from that of a U.S. sale and the difference affected price comparability, as manifested in a pattern of consistent price differences between the sales on which normal value is based and home-market sales at the level of trade of the export transaction, we made a level-of-trade adjustment under section 773(a)(7)(A) of the Act. See, *e.g., Notice of Final Determination of Sales at Less Than Fair Value: Certain Cut-to-Length Carbon Steel Plate From South Africa,* 62 FR 61731, 61732 (November 19, 1997).

Where the respondent reported no home-market levels of trade that were equivalent to the CEP level of trade and where the CEP level of trade was at a less advanced stage than any of the home-market levels of trade, we were unable to calculate a level-of-trade adjustment based on the respondent's home-market sales of the foreign like product. Furthermore, we have no other information that provides an appropriate basis for determining a level-of-trade adjustment. For respondents' CEP sales in such situations, to the extent possible, we determined normal value at the same level of trade as the U.S. sale to the first unaffiliated customer and made a CEP-offset adjustment in accordance with section 773(a)(7)(B) of the Act. The CEP-offset adjustment to normal value was subject to the so-called "offset cap," calculated as the sum of home-market indirect selling expenses up to the amount of U.S. indirect selling expenses deducted from CEP (or, if there were no home-market commissions, the sum of U.S. indirect selling expenses and U.S. commissions).

For a company-specific description of our level-of-trade analyses for these preliminary results, see Memorandum to Laurie Parkhill, dated April 21, 2010, entitled "Ball Bearings and Parts Thereof from Various Countries: 2008/2009 Level-of-Trade Analysis," on file in the CRU, room 1117.

Weighted-Average Margin

In order to derive a single weighted-average margin for each respondent, we weight-averaged the EP and CEP weighted-average margins (using the EP and CEP, respectively, as the weighting factors). To accomplish this when we sampled CEP sales, we first calculated the total dumping margins for all CEP sales during the review period by multiplying the sample CEP margins by the ratio of total days in the review period to days in the sample weeks. We then calculated a total net value for all CEP sales during the review period by multiplying the sample CEP total net value by the same ratio. Finally, we divided the combined total dumping margins for both EP and CEP sales by the combined total value for both EP and CEP sales to obtain the weighted-average margin.

Intent To Revoke

On May 18, 2009, Barden/Schaeffler UK requested revocation of the order on ball bearings and parts thereof from the United Kingdom as it pertains to its sales.

Under section 751(d)(1) of the Act, the Department "may revoke, in whole or in part" an antidumping duty order upon completion of a review. Although Congress has not specified the procedures that the Department must follow in revoking an order, the Department has developed a procedure for revocation that is set forth at 19 CFR 351.222. Under 19 CFR 351.222(b)(2), the Department may revoke an antidumping duty order in part if it concludes that (A) an exporter or producer has sold the merchandise at not less than normal value for a period of at least three consecutive years, (B) the exporter or producer has agreed in writing to its immediate reinstatement in the order if the Secretary concludes that the exporter or producer, subsequent to the revocation, sold the subject merchandise at less than normal value, and (C) the continued application of the antidumping duty order is no longer necessary to offset dumping. Section 351.222(b)(3) of the Department's regulations states that, in the case of an exporter that is not the producer of subject merchandise, the

Department normally will revoke an order in part under 19 CFR 351.222(b)(2) only with respect to subject merchandise produced or supplied by those companies that supplied the exporter during the time period that formed the basis for revocation.

A request for revocation of an order in part for a company previously found dumping must address three elements. The company requesting the revocation must do so in writing and submit the following statements with the request: (1) The company's certification that it sold the subject merchandise at not less than normal value during the current review period and that, in the future, it will not sell at less than normal value; (2) the company's certification that, during each of the consecutive years forming the basis of the request, it sold the subject merchandise to the United States in commercial quantities; (3) the agreement to reinstatement in the order if the Department concludes that, subsequent to revocation, the company has sold the subject merchandise at less than normal value. See 19 CFR 351.222(e)(1). We preliminarily determine that the request dated May 18, 2009, from Barden/Schaeffler UK meets all of the criteria under 19 CFR 351.222(e)(1).

With regard to the criteria of 19 CFR 351.222(b)(2), our preliminary margin calculations show that Barden/Schaeffler UK sold ball bearings at not less than normal value during the current review period. See "Preliminary Results of Reviews" section below. In addition, it sold ball bearings at not less than normal value in the two previous administrative reviews in which it was reviewed. *See Ball Bearings and Parts Thereof From France, et al.: Final Results of Antidumping Duty Administrative Reviews and Rescission of Reviews in Part,* 73 FR 52823 (September 11, 2008), for the period May 1, 2006, through April 30, 2007, and *Ball Bearings and Parts Thereof From France, et al.: Final Results of Antidumping Duty Administrative Reviews and Revocation of an Order in Part,* 74 FR 44819 (August 31, 2009), for the period May 1, 2007, through April 30, 2008. Based on our examination of the sales data submitted by Barden/Schaeffler UK, we preliminarily determine that Barden/Schaeffler UK sold the subject merchandise in the United States in commercial quantities in each of the consecutive years cited by Barden/Schaeffler UK to support its request for revocation. See the preliminary analysis memorandum for Barden/Schaeffler UK dated April 21, 2010, for more details. Thus, we preliminarily find that Barden/Schaeffler UK had zero or *de minimis* dumping margins for the last three consecutive years and sold in commercial quantities all three years. Also, we preliminarily determine that application of the antidumping duty order to Barden/Schaeffler UK is no longer warranted for the following reasons: (1) The company had zero or de minimis margins for a period of at least three consecutive years; (2) the company has agreed to immediate reinstatement of the order if we find that it has resumed making sales at less than fair value; (3) the continued application of the order is not otherwise necessary to offset dumping.

Therefore, we preliminarily determine that Barden/Schaeffler UK qualifies for revocation from the order on ball bearings and parts thereof from the United Kingdom pursuant to 19 CFR 351.222(b)(2) and, thus, we preliminarily determine to revoke the order with respect to ball bearings and parts thereof from United Kingdom exported and/or sold to the United States by Barden/Schaeffler UK. If our intent to revoke results in revocation of the order in part with respect to merchandise exported and/or sold by Barden/Schaeffler UK, the proposed effective date of the revocation is May 1, 2009.

Preliminary Results of Changed-Circumstances Review

On January 21, 2010, we initiated a changed-circumstances review upon being informed by myonic that on March 5, 2009, Minebea Co., Ltd. (Minebea), purchased 100 percent of the shares of myonic GmbH Holding, myonic's parent company, and that an unaffiliated investor purchased myonic Inc. which was myonic's U.S. subsidiary. See *Ball Bearings and Parts Thereof From Germany: Initiation of Antidumping Duty Changed-Circumstances Review,* 75 FR 3444 (January 21, 2010). We also announced that we would conduct the changed-circumstances review in the context of the 2008/2009 administrative review.

In determining whether one company is the successor to another for purposes of applying the antidumping duty law, the Department examines a number of factors including, but not limited to, changes in management, production facilities, supplier relationships, and customer base. *See Ball Bearings and Parts Thereof from Japan: Initiation and Preliminary Results of Changed-Circumstances Review,* 71 FR 14679, 14680 (March 23, 2006), unchanged in *Notice of Final Results of Antidumping Duty Changed-Circumstances Review: Ball Bearings and Parts Thereof from Japan,* 71 FR 26452 (May 5, 2006) (collectively *CCR Japan*), and *Industrial Phosphoric Acid From Israel; Final Results of Antidumping Duty Changed Circumstances Review,* 59 FR 6944 (February 14, 1994). Although no single or even several of these factors will necessarily provide a dispositive indication of succession, generally the Department will consider one company to be a successor to another company if its resulting operation is similar to that of its predecessor. *See CCR Japan and Brass Sheet and Strip From Canada; Final Results of Antidumping Duty Administrative Review,* 57 FR 20460 (May 13, 1992), at Comment 1. Thus, if the evidence demonstrates that, with respect to the production and sale of the subject merchandise, the new company operates as the same business entity as the prior company, the Department will assign the new company the cash-deposit rate of its predecessor. *Id.* See also *Circular Welded Non-Alloy Steel Pipe From the Republic of Korea; Preliminary Results of Antidumping Duty Changed Circumstances Review,* 63 FR 14679 (March 26, 1998), unchanged in *Circular Welded Non-Alloy Steel Pipe From Korea; Final Results of Antidumping Duty Changed Circumstances Review,* 63 FR 20572 (April 27, 1998), in which the Department found that a company which only changed its name and did not change its operations is a successor-in-interest to the company before it changed its name.

In its responses dated October 1, 2009, December 14, 2009, February 3, 2010, and March 9, 2010, myonic provided information to demonstrate that it is the successor-in-interest to the pre-acquisition myonic. Myonic provided contract documents which provided evidence of Minebea's acquisition of myonic GmbH Holding and an unaffiliated investor's purchase of myonic Inc. Myonic provided the chart of management structures and list of managing directors which state that the company's management did not change. We have visited myonic's production facilities and reviewed myonic's production of ball bearings and we did not find differences in business operations between the pre-acquisition myonic and post-acquisition myonic. We examined information concerning myonic's customers in the home market and the United States and found that the post-acquisition myonic retained several of its pre-acquisition customers. We reviewed myonic Inc.'s invoices and the invoices of Minebea's U.S. affiliate, New Hampshire Ball

Bearings, Inc. (NHBB), and found that NHBB's myonic USA Division sells myonic's ball bearings in the United States. The post-acquisition myonic purchased raw materials from suppliers which differ from the suppliers from which the pre-acquisition myonic purchased raw materials but the types of input remained the same for both pre-acquisition myonic and post-acquisition myonic. See the preliminary analysis memorandum for myonic dated April 21, 2010, for more details.

Based on the above, we preliminarily determine that the post-acquisition myonic is the successor-in-interest to the pre-acquisition myonic.

Preliminary Results of Reviews

As a result of our reviews, we preliminarily determine that the following percentage weighted-average dumping margins on ball bearings and parts thereof from various countries exist for the period May 1, 2008, through April 30, 2009:

Company	Margin (percent)
France	
SKF France	6.86
Microturbo SAS 6	.86
Germany	
myonic	21.72
Schaeffler KG	2.16
SKF GmbH	11.94
Italy	
SKF Italy	13.04
Schaeffler Italia S.r.l	1.98
Japan	
Aisin Seiki Company Ltd	10.97
JTEKT Corporation (formerly known as Koyo Seiko Co.)	10.97
Makino Milling Machine Company Ltd	10.97
Mazda Motor Corporation	10.97
Nachi- Fujikoshi Corporation	10.97
Nissan Motor Company Ltd	10.97
NSK Ltd	8.48
NTN Corporation	13.46
Sapporo Precision, Inc., and Tokyo Precision, Inc	10.97
Univance Corporation	10.97
Yamazaki Mazak Trading Corporation	10.97
United Kingdom	
Barden/Schaeffler UK	0.00
NSK U.K	6.85
SKF UK	6.85
Timken UK Ltd. and Timken Aerospace UK Ltd	6.85

Comments

We will disclose the calculations we used in our analysis to parties to these reviews within five days of the date of publication of this notice. *See* 19 CFR 351.224(b). Any interested party may request a hearing within 30 days of the date of publication of this notice. See 19 CFR 351.310(c). If requested, a general-issues hearing and any hearings regarding issues related solely to specific countries will be held at the main Department building at times and locations to be determined.

Interested parties who wish to request a hearing or to participate if one is requested must submit a written request to the Assistant Secretary for Import Administration within 30 days of the date of publication of this notice. See 19 CFR 351.310(c). Requests should contain the following: (1) The party's name, address, and telephone number; (2) the number of participants; (3) a list of issues to be discussed.

Issues raised in hearings will be limited to those raised in the respective case briefs. Case briefs from interested parties and rebuttal briefs, limited to the issues raised in the respective case briefs, may be submitted not later than the following dates:

Case	Briefs due	Rebuttals due
France	May 26, 2010	June 2, 2010.
Germany [3]	May 27, 2010	June 3, 2010.
Italy	May 28, 2010	June 4, 2010.
Japan	June 1, 2010	June 8, 2010.
United Kingdom	June 2, 2010	June 9, 2010.
General Issues	June 3, 2010	June 10, 2010.

Parties who submit case briefs (see 19 CFR 351.309(c)) or rebuttal briefs (see 19 CFR 351.309(d)) in these proceedings are requested to submit with each argument (1) a statement of the issue and (2) a brief summary of the argument. Parties are also encouraged to provide a summary of the arguments not to exceed five pages and a table of statutes, regulations, and cases cited.

The Department intends to issue the final results of these administrative reviews, including the results of its analysis of issues raised in any such written briefs or at the hearings, if held, within 120 days of the date of publication of this notice.

[3] Briefs should include any comments with respect to the changed-circumstances review concerning myonic.

Assessment Rates

The Department shall determine, and U.S. Customs and Border Protection (CBP) shall assess, antidumping duties on all appropriate entries. In accordance with 19 CFR 351.212(b)(1), we have calculated, whenever possible, an exporter/importer (or customer)-specific assessment rate or value for merchandise subject to these reviews as described below.

The Department clarified its "automatic assessment" regulation on May 6, 2003. This clarification will apply to entries of subject merchandise during the period of review produced by companies selected for individual examination in these preliminary results of reviews for which the reviewed companies did not know their merchandise was destined for the United States. In such instances, we will instruct CBP to liquidate unreviewed entries at the country-specific all-others rate if there is no rate for the intermediate company(ies) involved in the transaction. For a full discussion of this clarification, *see Antidumping and Countervailing Duty Proceedings: Assessment of Antidumping Duties,* 68 FR 23954 (May 6, 2003).

For the companies which were not selected for individual examination, we will instruct CBP to apply the rates listed above to all entries of subject merchandise produced and/or exported by such firms.

We intend to issue liquidation instructions to CBP 15 days after publication of the final results of these reviews.

Export-Price Sales

With respect to EP sales, for these preliminary results, we divided the total

dumping margins (calculated as the difference between normal value and EP) for each exporter's importer or customer by the total number of units the exporter sold to that importer or customer. We will direct CBP to assess the resulting per-unit dollar amount against each unit of merchandise in each of that importer's/customer's entries under the relevant order during the review period.

Constructed Export-Price Sales

For CEP sales (sampled and non-sampled), we divided the total dumping margins for the reviewed sales by the total entered value of those reviewed sales for each importer. We will direct CBP to assess the resulting percentage margin against the entered customs values for the subject merchandise on each of that importer's entries under the relevant order during the review period. *See* 19 CFR 351.212(b).

Cash-Deposit Requirements

The following deposit requirements will be effective upon publication of the notice of final results of administrative reviews for all shipments of subject merchandise entered, or withdrawn from warehouse, for consumption on or after the date of publication, as provided by section 751(a)(1) of the Act: (1) The cash-deposit rates for the reviewed companies will be the rates established in the final results of the reviews; (2) for previously reviewed or investigated companies not listed above, the cash-deposit rate will continue to be the company-specific rate published for the most recent period; (3) if the exporter is not a firm covered in these reviews, a prior review, or the less-than-fair-value investigations but the manufacturer is, the cash-deposit rate will be the rate established for the most recent period for the manufacturer of the merchandise; (4) the cash-deposit rate for all other manufacturers or exporters will continue to be the all-others rate for the relevant order made effective by the final results of reviews published on July 26, 1993. *See Final Results of Antidumping Duty Administrative Reviews and Revocation in Part of an Antidumping Duty Order,* 58 FR 39729 (July 26, 1993). For ball bearings from Italy, see *Antifriction Bearings (Other Than Tapered Roller Bearings) and Parts Thereof From France, et al.; Final Results of Antidumping Duty Administrative Reviews and Partial Termination of Administrative Reviews,* 61 FR 66472, 66521 (December 17, 1996). These rates are the all-others rates from the relevant less-than-fair-value investigations. These deposit requirements, when imposed, shall remain in effect until further notice.

Notification to Importers

This notice also serves as a preliminary reminder to importers of their responsibility under 19 CFR 351.402(f) to file a certificate regarding the reimbursement of antidumping duties prior to liquidation of the relevant entries during this review period. Failure to comply with this requirement could result in the Department's presumption that reimbursement of antidumping duties occurred and the subsequent assessment of doubled antidumping duties.

These preliminary results of administrative reviews, preliminary results of changed-circumstances review, rescission of antidumping duty administrative reviews in part, and intent to revoke an order in part are issued and published in accordance with sections 751(a)(1), 751(b)(1), and 777(i)(1) of the Act.

Dated: April 21, 2010.

Ronald K. Lorentzen,

Deputy Assistant Secretary for Import Administration.

[FR Doc. 2010–9865 Filed 4–27–10; 8:45 am]

BILLING CODE 3510–DS–P

DEPARTMENT OF COMMERCE

National Oceanic and Atmospheric Administration

[Docket No. 10041486–0186–01]

Notice of Web Site Publication for the Climate Program Office

AGENCY: Climate Program Office (CPO), Office of Oceanic and Atmospheric Research (OAR), National Oceanic and Atmospheric Administration (NOAA), Commerce.

ACTION: Notice.

SUMMARY: The Climate Program Office publishes this notice to announce the availability of information pertaining to an upcoming Climate Program Office solicitation of grant proposals on its Web site at *http://www.climate.noaa.gov.*

FOR FURTHER INFORMATION CONTACT: Eric Locklear; Chief, Administrative Services Division, Climate Program Office; (301) 734–1236.

SUPPLEMENTARY INFORMATION: Detailed information is available on the Climate Program Office Web site pertaining to the CPO's research strategies, objectives, and priorities. The Web site also provides important information regarding a solicitation for Letters of Intent for grant proposals to be awarded in FY 2011. The purpose of a Letter of Intent is for the Climate Program Office to provide potential applicants with feedback on the relevance of their proposed projects prior to the submission of a full proposal. Please see the Web site for further information on the format and content of the Letter of Intent. Letters of Intent are due to the CPO by 5 p.m. EST on May 26, 2010.

While it is in the best interest of an applicant to submit a Letter of Intent, it is optional. Applicants who do not submit a Letter of Intent are still eligible to prepare and submit full applications after the publication of the Notice of Funding Availability and release of the associated Federal Funding Opportunity announcement.

Dated: April 22, 2010.

Mark E. Brown,

Chief Financial Officer/Chief Administrative Officer, Office of Oceanic and Atmospheric Research, National Oceanic and Atmospheric Administration.

[FR Doc. 2010–9765 Filed 4–27–10; 8:45 am]

BILLING CODE 3510–KB–P

COMMODITY FUTURES TRADING COMMISSION

Sunshine Act Meetings

AGENCY HOLDING THE MEETING: Commodity Futures Trading Commission.

TIME AND DATE: 11 a.m., Wednesday, May 12, 2010.

PLACE: 1155 21st St., NW., Washington, DC, 9th Floor Commission Conference Room.

STATUS: Closed.

MATTERS TO BE CONSIDERED: Rule Enforcement Review Meeting.

CONTACT PERSON FOR MORE INFORMATION: Sauntia S. Warfield, 202–418–5084.

Sauntia S. Warfield,

Assistant Secretary of the Commission.

[FR Doc. 2010–9965 Filed 4–26–10; 4:15 pm]

BILLING CODE 6351–01–P

CORPORATION FOR NATIONAL AND COMMUNITY SERVICE

Proposed Information Collection; Comment Request

AGENCY: Corporation for National and Community Service.

ACTION: Notice.

SUMMARY: The Corporation for National and Community Service (hereinafter the "Corporation"), as part of its continuing

effort to reduce paperwork and respondent burden, conducts a pre-clearance consultation program to provide the general public and federal agencies with an opportunity to comment on proposed and/or continuing collections of information in accordance with the Paperwork Reduction Act of 1995 (PRA95) (44 U.S.C. 3506(c)(2)(A)). This program helps to ensure that requested data can be provided in the desired format, reporting burden (time and financial resources) is minimized, collection instruments are clearly understood, and the impact of collection requirement on respondents can be properly assessed.

Currently, the Corporation is soliciting comments concerning its proposed renewal of the Peer Reviewer Application (OMB Number 3045–0090), used by the Corporation to recruit external reviewers to assess grant applications. The information will be provided by individuals wishing to serve as peer review participants for the Corporation grant review processes. The completion of this information collection is required to be considered as a potential reviewer for the Corporation.

Copies of the information collection request can be obtained by contacting the office listed in the addresses section of this notice.

DATES: Written comments must be submitted to the individual and office listed in the **ADDRESSES** section by June 28, 2010.

ADDRESSES: You may submit comments, identified by the title of the information collection activity, by any of the following methods:

(1) *By mail sent to:* Corporation for National and Community Service, Office of Grant Policy and Operations, Attention: Vielka Garibaldi, Acting Director, Office of Grants Policy and Operations, Room 9303; 1201 New York Avenue, NW., Washington, DC 20525.

(2) By hand delivery or by courier to the Corporation's mailroom at Room 8100 at the mail address given in paragraph (1) above, between 9 a.m. and 4 p.m. Monday through Friday, except Federal holidays.

(3) *By fax to:* (202) 606–3477, Attention: Vielka Garibaldi, Acting Director, Office of Grants Policy and Operations.

(4) Electronically through *http://www.regulations.gov.* Individuals who use a telecommunications device for the deaf (TTY–TDD) may call (202) 606–3472 between 8:30 a.m. and 5 p.m. eastern time, Monday through Friday.

FOR FURTHER INFORMATION CONTACT: Vielka Garibaldi, (202) 606–3472, or by e-mail at *vgaribaldi@cns.gov.*

SUPPLEMENTARY INFORMATION: The Corporation is particularly interested in comments that:

- Evaluate whether the proposed collection of information is necessary for the proper performance of the functions of the Corporation, including whether the information will have practical utility;
- Evaluate the accuracy of the agency's estimate of the burden of the proposed collection of information, including the validity of the methodology and assumptions used;
- Enhance the quality, utility, and clarity of the information to be collected; and
- Minimize the burden of the collection of information on those who are expected to respond, including the use of appropriate automated, electronic, mechanical, or other technological collection techniques or other forms of information technology (*e.g.,* permitting electronic submissions of responses).

Background

The Corporation provides grants on a competitive basis to support organizations that use service as an strategy for addressing national and community needs. As part of the grant applications review process, the Corporation uses external reviewers to assess the quality of grant proposals submitted to the Corporation. The peer reviewer application is used by individuals that wish to serve as peer reviewers or peer review panel facilitators for the Corporation grant reviews. The information collected will be used by the Corporation to select review participants for each grant competition. The information is collected electronically using eGrants, the Corporation's web-base grant management system.

Current Action

The Corporation seeks to renew the current information collection. Minor revisions are proposed to clarify eGrants instructions and reflect adjustments to the Corporation for National and Community Service eGrants system.

The information collection will otherwise be used in the same manner as the existing application. The Corporation also seeks to continue using the current application until the revised application is approved by OMB. The current application is due to expire on October 31, 2010.

Type of Review: Renewal.

Agency: Corporation for National and Community Service.

Title: Peer Reviewer Application.

OMB Number: 3045–0090.

Agency Number: None.

Affected Public: Individuals who are interested in serving as peer reviewers and peer review panel facilitators for the Corporation.

Total Respondents: 2,500 responses annually.

Frequency: One time to complete.

Average Time per Response: Averages 40 minutes.

Estimated Total Burden Hours: 1,666 hours.

Total Burden Cost (capital/startup): None.

Total Burden Cost (operating/maintenance): None.

Comments submitted in response to this notice will be summarized and/or included in the request for Office of Management and Budget approval of the information collection request; they will also become a matter of public record.

Dated: April 21, 2010.

Vielka Garibaldi,

Office of Grants Policy and Operations.

[FR Doc. 2010–9867 Filed 4–27–10; 8:45 am]

BILLING CODE 6050–$$–P

DEPARTMENT OF DEFENSE

Department of the Air Force

US Air Force Academy Board of Visitors Notice of Meeting

AGENCY: US Air Force Academy Board of Visitors.

ACTION: Meeting notice.

SUMMARY: Pursuant to 10 U.S.C. 9355, the US Air Force Academy (USAFA) Board of Visitors (BoV) will meet in the Russell Senate Office Building, Room 236, Washington DC, on 13 May 2010. The meeting session will begin at 8 a.m. The purpose of this meeting is to review morale and discipline, social climate, curriculum, instruction, physical equipment, fiscal affairs, academic methods, and other matters relating to the Academy.

Pursuant to 5 U.S.C. 552b, as amended, and 41 CFR 102–3.155, the Administrative Assistant to Secretary of the Air Force has determined that a portion of this meeting shall be closed to the public. The Administrative Assistant to the Secretary of the Air Force, in consultation with the Office of the Air Force General Counsel, has determined in writing that the public interest requires that one portion of this meeting be closed to the public because it will involve matters covered by subsection (c)(6) of 5 U.S.C. 552b.

Public attendance at the open portions of this USAFA BoV meeting shall be accommodated on a first-come, first-served basis up to the reasonable and safe capacity of the meeting room. In addition, any member of the public wishing to provide input to the USAFA BoV should submit a written statement in accordance with 41 CFR 102–3.140(c) and section 10(a)(3) of the Federal Advisory Committee Act (FACA) and the procedures described in this paragraph. Written statements must address the following details: the issue, discussion, and a recommended course of action. Supporting documentation may also be included as needed to establish the appropriate historical context and provide any necessary background information. Written statements can be submitted to the Designated Federal Officer (DFO) at the Air Force Pentagon address detailed below at any time. However, if a written statement is not received at least 10 days before the first day of the meeting which is the subject of this notice, then it may not be provided to, or considered by, the BoV until its next open meeting. The DFO will review all timely submissions with the BoV Chairperson and ensure they are provided to members of the BoV before the meeting that is the subject of this notice. For the benefit of the public, rosters that list the names of BoV members and any releasable materials presented during open portions of this BoV meeting shall be made available upon request.

If, after review of timely submitted written comments, the BoV Chairperson and DFO deem appropriate, they may choose to invite the submitter of the written comments to orally present their issue during an open portion of the BoV meeting that is the subject of this notice. Members of the BoV may also petition the Chairperson to allow specific persons to make oral presentations before the BoV. Any oral presentations before the BoV shall be in accordance with 41 CFR 102–3.140(d), section 10(a)(3) of the FACA, and this paragraph. The DFO and BoV Chairperson may, if desired, allot a specific amount of time for members of the public to present their issues for BoV review and discussion. Direct questioning of BoV members or meeting participants by the public is not permitted except with the approval of the DFO and Chairperson.

FOR FURTHER INFORMATION CONTACT: Mr. David Boyle, USAFA Programs Manager, Directorate of Force Development, Deputy Chief of Staff, Manpower, Personnel, and Services, AF/A1DOA, 2221 S. Clark St, Ste 500, Arlington, VA, 22202, (703) 604–8158.

Bao-Anh Trinh,

Air Force Federal Register Liaison Officer.

[FR Doc. 2010–9863 Filed 4–27–10; 8:45 am]

BILLING CODE 5001–05–P

DEPARTMENT OF EDUCATION

Submission for OMB Review; Comment Request

AGENCY: Department of Education.

SUMMARY: The Acting Director, Information Collection Clearance Division, Regulatory Information Management Services, Office of Management invites comments on the submission for OMB review as required by the Paperwork Reduction Act of 1995.

DATES: Interested persons are invited to submit comments on or before May 28, 2010.

ADDRESSES: Written comments should be addressed to the Office of Information and Regulatory Affairs, Attention: Education Desk Officer, Office of Management and Budget, 725 17th Street, NW., Room 10222, New Executive Office Building, Washington, DC 20503, be faxed to (202) 395–5806 or e-mailed to *oira_submission@omb.eop.gov* with a cc: to *ICDocketMgr@ed.gov.*

SUPPLEMENTARY INFORMATION: Section 3506 of the Paperwork Reduction Act of 1995 (44 U.S.C. Chapter 35) requires that the Office of Management and Budget (OMB) provide interested Federal agencies and the public an early opportunity to comment on information collection requests. OMB may amend or waive the requirement for public consultation to the extent that public participation in the approval process would defeat the purpose of the information collection, violate State or Federal law, or substantially interfere with any agency's ability to perform its statutory obligations. The Acting Director, Information Collection Clearance Division, Regulatory Information Management Services, Office of Management, publishes that notice containing proposed information collection requests prior to submission of these requests to OMB. Each proposed information collection, grouped by office, contains the following: (1) Type of review requested, *e.g.* new, revision, extension, existing or reinstatement; (2) Title; (3) Summary of the collection; (4) Description of the need for, and proposed use of, the information; (5) Respondents and frequency of collection; and (6) Reporting and/or Recordkeeping burden. OMB invites public comment.

Dated: April 23, 2010.

James Hyler,

Acting Director, Information Collection Clearance Division, Regulatory Information Management Services, Office of Management.

Federal Student Aid

Type of Review: Revision.

Title: Federal Family Education Loan (FFEL) Program, Federal Perkins Loan Program, and William D. Ford Federal Direct Loan (Direct Loan) Program Military Service Deferment/Post-Active Duty Student Deferment Request.

Frequency: On Occasion.

Affected Public:

Individuals or households.

Reporting and Recordkeeping Hour Burden:

Responses: 16,000.

Burden Hours: 8,000.

Abstract: The Military Service/Post-Active Duty Student Deferment request form serves as the means by which a FFEL, Perkins, or Direct Loan borrower requests a military service deferment and/or post-active duty student deferment and provides his or her loan holder with the information needed to determine whether the borrower meets the applicable deferment eligibility requirements. The form also serves as the means by which the U.S. Department of Education identifies Direct Loan borrowers who qualify for the Direct Loan Program's no accrual of interest benefit for active duty service members.

Requests for copies of the information collection submission for OMB review may be accessed from *http://edicsweb.ed.gov*, by selecting the "Browse Pending Collections" link and by clicking on link number 4203. When you access the information collection, click on "Download Attachments" to view. Written requests for information should be addressed to U.S. Department of Education, 400 Maryland Avenue, SW., LBJ, Washington, DC 20202–4537. Requests may also be electronically mailed to the Internet address *ICDocketMgr@ed.gov* or faxed to 202–401–0920. Please specify the complete title of the information collection when making your request.

Comments regarding burden and/or the collection activity requirements should be electronically mailed to *ICDocketMgr@ed.gov.* Individuals who use a telecommunications device for the deaf (TDD) may call the Federal Information Relay Service (FIRS) at 1–800–877–8339.

[FR Doc. 2010–9841 Filed 4–27–10; 8:45 am]

BILLING CODE 4000–01–P

DEPARTMENT OF ENERGY

Federal Energy Regulatory Commission

Combined Notice of Filings No. 2

April 21, 2010.

Take notice that the Commission has received the following Natural Gas Pipeline Rate and Refund Report filings:

Docket Numbers: RP10–539–001.

Applicants: Discovery Gas Transmission LLC.

Description: Discovery Gas Transmission, LLC submits Substitute First Revised Sheet 225 *et al.* to FERC Gas Tariff, Original Volume 1 to be effective 5/1/10.

Filed Date: 04/02/2010.

Accession Number: 20100402–0211.

Comment Date: 5 p.m. Eastern Time on Friday, April 23, 2010.

Docket Numbers: RP10–330–001.

Applicants: Mojave Pipeline Company.

Description: Mojave Pipeline Company submits Thirty-Second Revised Sheet No 11 *et al.* FERC Gas Tariff, Second Revised Volume No 1.

Filed Date: 04/19/2010.

Accession Number: 20100420–0201.

Comment Date: 5 p.m. Eastern Time on Monday, May 3, 2010.

Any person desiring to protest this filing must file in accordance with Rule 211 of the Commission's Rules of Practice and Procedure (18 CFR 385.211). Protests to this filing will be considered by the Commission in determining the appropriate action to be taken, but will not serve to make protestants parties to the proceeding. Such protests must be filed on or before 5 p.m. Eastern time on the specified comment date. Anyone filing a protest must serve a copy of that document on all the parties to the proceeding.

The Commission encourages electronic submission of protests in lieu of paper using the "eFiling" link at *http://www.ferc.gov.* Persons unable to file electronically should submit an original and 14 copies of the protest to the Federal Energy Regulatory Commission, 888 First Street, NE., Washington, DC 20426.

This filing is accessible on-line at *http://www.ferc.gov,* using the "eLibrary" link and is available for review in the Commission's Public Reference Room in Washington, DC. There is an "eSubscription" link on the Web site that enables subscribers to receive e-mail notification when a document is added to a subscribed docket(s). For assistance with any FERC Online service, please e-mail *FERCOnlineSupport@ferc.gov,* or call (866) 208–3676 (toll free). For TTY, call (202) 502–8659.

Nathaniel J. Davis, Sr.,

Deputy Secretary.

[FR Doc. 2010–9786 Filed 4–27–10; 8:45 am]

BILLING CODE 6717–01–P

DEPARTMENT OF ENERGY

Federal Energy Regulatory Commission

Combined Notice of Filings No. 1

April 21, 2010.

Take notice that the Commission received the following exempt wholesale generator filings:

Docket Numbers: EG09–48–000.

Applicants: Meadow Lake Wind Farm II LLC.

Description: Notice of self-certification re EWG status change in facts of Meadow Lake Wind Farm II LLC.

Filed Date: 04/21/2010.

Accession Number: 20100421–5097.

Comment Date: 5 p.m. Eastern Time on Wednesday, May 12, 2010.

Take notice that the Commission received the following electric rate filings:

Docket Numbers: ER99–3911–007.

Applicants: Northbrook New York, LLC.

Description: Northbrook New York, LLC submits letter notifying the Commission of a change in status resulting from the consummation.

Filed Date: 04/20/2010.

Accession Number: 20100420–0210.

Comment Date: 5 p.m. Eastern Time on Tuesday, May 11, 2010.

Docket Numbers: ER01–1699–009.

Applicants: Pilot Power Group, Inc.

Description: Pilot Power Group, Inc submits Request for Category I Seller Status pursuant to Order Nos. 697-697A.

Filed Date: 04/20/2010.

Accession Number: 20100420–0208.

Comment Date: 5 p.m. Eastern Time on Tuesday, May 11, 2010.

Docket Numbers: ER03–908–003.

Applicants: Fulcrum Power Marketing LLC.

Description: Fulcrum Power marketing, LLC submits letter requesting a determination by the Commission that they qualify as a Category 1 Seller *et al.*

Filed Date: 04/20/2010.

Accession Number: 20100420–0211.

Comment Date: 5 p.m. Eastern Time on Tuesday, May 11, 2010.

Docket Numbers: ER09–677–001.

Applicants: Exelon Generation Company, LLC.

Description: Exelon Generation Company, LLC submits Notice of Succession to Rate Schedule FERC 6 of AmerGen Energy Company, LLC.

Filed Date: 04/13/2010.

Accession Number: 20100414–0216.

Comment Date: 5 p.m. Eastern Time on Tuesday, May 04, 2010.

Docket Numbers: ER10–382–002.

Applicants: Florida Power Corporation.

Description: Florida Power Corp. submits an amendment to its 2/16/10 filing, which amended the 12/2/09 filing of an agreement with Seminole Electric Cooperative, Inc designated as Rate Schedule No. 311.

Filed Date: 04/09/2010.

Accession Number: 20100409–0235.

Comment Date: 5 p.m. Eastern Time on Friday, April 30, 2010.

Docket Numbers: ER10–899–001.

Applicants: Consulting Gasca & Associates, LLC.

Description: Consulting Gasca and Associates, LLC submits the Petition for Acceptance of Initial Tariff, Waivers and blanket Authority.

Filed Date: 04/20/2010.

Accession Number: 20100420–0207.

Comment Date: 5 p.m. Eastern Time on Tuesday, May 11, 2010.

Docket Numbers: ER10–1070–000.

Applicants: Midwest Independent Transmission System Operator, Inc.

Description: Midwest Independent Transmission System Operator, Inc submits executed Amended and Restated Large Generation Interconnection Agreement with MinnDakota Wind LLC *et al.*

Filed Date: 04/20/2010.

Accession Number: 20100420–0212.

Comment Date: 5 p.m. Eastern Time on Tuesday, May 11, 2010.

Take notice that the Commission received the following open access transmission tariff filings:

Docket Numbers: OA08–62–007.

Applicants: California Independent System Operator Corporation.

Description: Erratum of the California Independent System Operator Corporation.

Filed Date: 04/20/2010.

Accession Number: 20100420–0209.

Comment Date: 5 p.m. Eastern Time on Tuesday, May 11, 2010.

Any person desiring to intervene or to protest in any of the above proceedings must file in accordance with Rules 211 and 214 of the Commission's Rules of Practice and Procedure (18 CFR 385.211 and 385.214) on or before 5 p.m. Eastern time on the specified comment date. It is not necessary to separately intervene again in a subdocket related to a

compliance filing if you have previously intervened in the same docket. Protests will be considered by the Commission in determining the appropriate action to be taken, but will not serve to make protestants parties to the proceeding. Anyone filing a motion to intervene or protest must serve a copy of that document on the Applicant. In reference to filings initiating a new proceeding, interventions or protests submitted on or before the comment deadline need not be served on persons other than the Applicant.

The Commission encourages electronic submission of protests and interventions in lieu of paper, using the FERC Online links at *http://www.ferc.gov.* To facilitate electronic service, persons with Internet access who will eFile a document and/or be listed as a contact for an intervenor must create and validate an eRegistration account using the eRegistration link. Select the eFiling link to log on and submit the intervention or protests.

Persons unable to file electronically should submit an original and 14 copies of the intervention or protest to the Federal Energy Regulatory Commission, 888 First St., NE., Washington, DC 20426.

The filings in the above proceedings are accessible in the Commission's eLibrary system by clicking on the appropriate link in the above list. They are also available for review in the Commission's Public Reference Room in Washington, DC. There is an eSubscription link on the Web site that enables subscribers to receive e-mail notification when a document is added to a subscribed docket(s). For assistance with any FERC Online service, please e-mail *FERCOnlineSupport@ferc.gov.* or call (866) 208–3676 (toll free). For TTY, call (202) 502–8659.

Nathaniel J. Davis, Sr.,

Deputy Secretary.

[FR Doc. 2010–9787 Filed 4–27–10; 8:45 am]

BILLING CODE 6717–01–P

DEPARTMENT OF ENERGY

Federal Energy Regulatory Commission

Combined Notice of Filings No. 2

April 14, 2010.

Take notice that the Commission has received the following Natural Gas Pipeline Rate and Refund Report filings:

Docket Numbers: RP09–487–002.

Applicants: High Island Offshore System, L.L.C.

Description: Motion to place interim settlement rates into effect re High Island Offshore System, LLC.

Filed Date: 04/07/2010.

Accession Number: 20100407–0235.

Comment Date: 5 p.m. Eastern Time on Monday, April 19, 2010.

Docket Numbers: RP09–427–005.

Applicants: Southern Natural Gas Company.

Description: Southern Natural Gas Company submits second refund report.

Filed Date: 04/08/2010.

Accession Number: 20100408–0203.

Comment Date: 5 p.m. Eastern Time on Tuesday, April 20, 2010.

Docket Numbers: RP10–81–002.

Applicants: Texas Eastern Transmission, LP.

Description: Texas Eastern Transmission, LP submits Seventeenth Revised Sheet 50 *et al.* to FERC Gas Tariff, Seventh Revised Volume 1.

Filed Date: 04/08/2010.

Accession Number: 20100409–0207.

Comment Date: 5 p.m. Eastern Time on Tuesday, April 20, 2010.

Docket Numbers: RP09–406–002.

Applicants: Paiute Pipeline Company.

Description: Paiute Pipeline Company submits Second Substitute Nineteenth Revised Sheet 0 *et al.* to FERC Gas Tariff, Second Revised Volume 1A.

Filed Date: 04/13/2010.

Accession Number: 20100413–0219.

Comment Date: 5 p.m. Eastern Time on Monday, April 26, 2010.

Docket Numbers: RP10–595–001.

Applicants: Columbia Gas Transmission, LLC.

Description: Columbia Gas Transmission, LLC submits tariff filing per 154.203: System Map to be effective 4/9/2010.

Filed Date: 04/12/2010.

Accession Number: 20100412–5154.

Comment Date: 5 p.m. Eastern Time on Monday, April 26, 2010.

Any person desiring to protest this filing must file in accordance with Rule 211 of the Commission's Rules of Practice and Procedure (18 CFR 385.211). Protests to this filing will be considered by the Commission in determining the appropriate action to be taken, but will not serve to make protestants parties to the proceeding. Such protests must be filed on or before 5 p.m. Eastern time on the specified comment date. Anyone filing a protest must serve a copy of that document on all the parties to the proceeding.

The Commission encourages electronic submission of protests in lieu of paper using the "eFiling" link at *http://www.ferc.gov.* Persons unable to file electronically should submit an original and 14 copies of the protest to the Federal Energy Regulatory Commission, 888 First Street, NE., Washington, DC 20426.

This filing is accessible on-line at *http://www.ferc.gov,* using the "eLibrary" link and is available for review in the Commission's Public Reference Room in Washington, DC. There is an "eSubscription" link on the Web site that enables subscribers to receive e-mail notification when a document is added to a subscribed docket(s). For assistance with any FERC Online service, please e-mail *FERCOnlineSupport@ferc.gov,* or call (866) 208–3676 (toll free). For TTY, call (202) 502–8659.

Nathaniel J. Davis, Sr.,

Deputy Secretary.

[FR Doc. 2010–9789 Filed 4–27–10; 8:45 am]

BILLING CODE 6717–01–P

DEPARTMENT OF ENERGY

Federal Energy Regulatory Commission

Combined Notice of Filings No. 1

April 19, 2010.

Take notice that the Commission has received the following Natural Gas Pipeline Rate and Refund Report filings:

Docket Numbers: RP10–606–000.

Applicants: Gas Transmission Northwest Corporation.

Description: Gas Transmission Northwest Corporation submits Twenty-Third Revised Sheet 24 *et al.* to FERC Gas Tariff, Third Revised Volume 1–A to be effective 4/15/10.

Filed Date: 04/15/2010.

Accession Number: 20100415–0208.

Comment Date: 5 p.m. Eastern Time on Tuesday, April 27, 2010.

Docket Numbers: RP10–607–000.

Applicants: Guardian Pipeline, LLC

Description: Guardian Pipeline, LLC submits First Revised Sheet 5A *et al.* to FERC Gas Tariff, Original Volume 1, to be effective 6/1/10.

Filed Date: 04/15/2010.

Accession Number: 20100415–0207.

Comment Date: 5 p.m. Eastern Time on Tuesday, April 27, 2010.

Docket Numbers: RP10–608–000.

Applicants: Transcontinental Gas Pipe Line Company.

Description: Transcontinental Gas Pipe Line Company submits transportation service agreements for Rate Schedule FT.

Filed Date: 04/15/2010.

Accession Number: 20100415–0205.

Comment Date: 5 p.m. Eastern Time on Tuesday, April 27, 2010.

Docket Numbers: RP10–609–000.

Applicants: Algonquin Gas Transmission, LLC.

Description: Algonquin Gas Transmission, LLC submits Second Revised Sheet 89 *et al.* to FERC Gas Tariff, Fifth Revised Volume 1, to be effective 6/1/10.

Filed Date: 04/15/2010.

Accession Number: 20100415–0206.

Comment Date: 5 p.m. Eastern Time on Tuesday, April 27, 2010.

Docket Numbers: RP10–610–000.

Applicants: Gulf South Pipeline Company, LP.

Description: Gulf South Pipeline Company, LP submits the capacity release agreement containing negotiated rate provisions with Texla Energy Management, Inc.

Filed Date: 04/15/2010.

Accession Number: 20100416–0202.

Comment Date: 5 p.m. Eastern Time on Tuesday, April 27, 2010.

Docket Numbers: RP10–611–000.

Applicants: Panhandle Eastern Pipe Line Company, LP.

Description: Panhandle Eastern Pipe Line Company, LP submits Third Revised Sheet 1A *et al.* to FERC Gas Tariff, Third Revised Volume 1, to be effective 5/16/10.

Filed Date: 04/15/2010.

Accession Number: 20100416–0203.

Comment Date: 5 p.m. Eastern Time on Tuesday, April 27, 2010.

Docket Numbers: RP10–612–000.

Applicants: Gulf South Pipeline Company, LP.

Description: Gulf South Pipeline Company, LP submits capacity release agreement containing negotiated rate provisions by Texla Energy Management, Inc.

Filed Date: 04/16/2010.

Accession Number: 20100416–0206.

Comment Date: 5 p.m. Eastern Time on Wednesday, April 28, 2010.

Docket Numbers: RP10–613–000.

Applicants: Transcontinental Gas Pipe Line Company, LLC.

Description: Transcontinental Gas Pipe Line Company, LLC submits firm transportation service agreements under Rate Schedule FT.

Filed Date: 04/16/2010.

Accession Number: 20100416–0207.

Comment Date: 5 p.m. Eastern Time on Wednesday, April 28, 2010.

Docket Numbers: RP10–614–000.

Applicants: Trailblazer Pipeline Company LLC.

Description: Trailblazer Pipeline Company, LLC submits Penalty Revenue Crediting Report for the quarter ended 3/31/10.

Filed Date: 04/16/2010.

Accession Number: 20100416–0208.

Comment Date: 5 p.m. Eastern Time on Wednesday, April 28, 2010.

Docket Numbers: RP10–615–000.

Applicants: Texas Eastern Transmission, LP.

Description: Texas Eastern Transmission, LP submits Second Revised Sheet 121K to its FERC Gas Tariff, Seventh Revised Volume 1 to be effective 4/17/10.

Filed Date: 04/16/2010.

Accession Number: 20100416–0209.

Comment Date: 5 p.m. Eastern Time on Wednesday, April 28, 2010.

Docket Numbers: RP10–616–000.

Applicants: Equitrans, LP

Description: Equitrans, LP submits First Revised Sheet 0 *et al.* to its FERC Gas Tariff, Original Volume 1 to be effective 5/16/10.

Filed Date: 04/16/2010.

Accession Number: 20100416–0210.

Comment Date: 5 p.m. Eastern Time on Wednesday, April 28, 2010.

Docket Numbers: RP10–617–000.

Applicants: ANR Storage Company.

Description: ANR Storage Co. submits a negotiated rate agreement amendment.

Filed Date: 04/16/2010.

Accession Number: 20100416–0220.

Comment Date: 5 p.m. Eastern Time on Wednesday, April 28, 2010.

Any person desiring to intervene or to protest in any of the above proceedings must file in accordance with Rules 211 and 214 of the Commission's Rules of Practice and Procedure (18 CFR 385.211 and 385.214) on or before 5 p.m. Eastern time on the specified comment date. It is not necessary to separately intervene again in a subdocket related to a compliance filing if you have previously intervened in the same docket. Protests will be considered by the Commission in determining the appropriate action to be taken, but will not serve to make protestants parties to the proceeding. Anyone filing a motion to intervene or protest must serve a copy of that document on the Applicant. In reference to filings initiating a new proceeding, interventions or protests submitted on or before the comment deadline need not be served on persons other than the Applicant.

The Commission encourages electronic submission of protests and interventions in lieu of paper, using the FERC Online links at *http://www.ferc.gov.* To facilitate electronic service, persons with Internet access who will eFile a document and/or be listed as a contact for an intervenor must create and validate an eRegistration account using the eRegistration link. Select the eFiling link to log on and submit the intervention or protests.

Persons unable to file electronically should submit an original and 14 copies of the intervention or protest to the Federal Energy Regulatory Commission, 888 First St., NE., Washington, DC 20426.

The filings in the above proceedings are accessible in the Commission's eLibrary system by clicking on the appropriate link in the above list. They are also available for review in the Commission's Public Reference Room in Washington, DC. There is an eSubscription link on the Web site that enables subscribers to receive e-mail notification when a document is added to a subscribed docket(s). For assistance with any FERC Online service, please e-mail *FERCOnlineSupport@ferc.gov* or call (866) 208–3676 (toll free). For TTY, call (202) 502–8659.

Nathaniel J. Davis, Sr.,

Deputy Secretary.

[FR Doc. 2010–9791 Filed 4–27–10; 8:45 am]

BILLING CODE 6717–01–P

DEPARTMENT OF ENERGY

Federal Energy Regulatory Commission

Combined Notice of Filings No. 1

April 21, 2010.

Take notice that the Commission has received the following Natural Gas Pipeline Rate and Refund Report filings:

Docket Numbers: RP10–618–000.

Applicants: Gulf South Pipeline Company, LP.

Description: Gulf South Pipeline Company, LP submits capacity release agreement containing negotiated rate provisions with Texla Energy Management, Inc.

Filed Date: 04/16/2010.

Accession Number: 20100419–0207.

Comment Date: 5 p.m. Eastern Time on Wednesday, April 28, 2010.

Docket Numbers: RP10–619–000.

Applicants: Tennessee Gas Pipeline Company.

Description: Tennessee Gas Pipeline Company submits tariff filing per 154.203: Baseline Filing to be effective 4/19/2010.

Filed Date: 04/19/2010.

Accession Number: 20100419–5066.

Comment Date: 5 p.m. Eastern Time on Monday, May 3, 2010.

Docket Numbers: RP10–620–000.

Applicants: Gulf South Pipeline Company, LP.

Description: Gulf South Pipeline Company, LP submits a capacity release agreement containing negotiated rate provisions.

Filed Date: 04/20/2010.

Accession Number: 20100420–0213.

Comment Date: 5 p.m. Eastern Time on Monday, May 3, 2010.

Any person desiring to intervene or to protest in any of the above proceedings must file in accordance with Rules 211 and 214 of the Commission's Rules of Practice and Procedure (18 CFR 385.211 and 385.214) on or before 5 p.m. Eastern time on the specified comment date. It is not necessary to separately intervene again in a subdocket related to a compliance filing if you have previously intervened in the same docket. Protests will be considered by the Commission in determining the appropriate action to be taken, but will not serve to make protestants parties to the proceeding. Anyone filing a motion to intervene or protest must serve a copy of that document on the Applicant. In reference to filings initiating a new proceeding, interventions or protests submitted on or before the comment deadline need not be served on persons other than the Applicant.

The Commission encourages electronic submission of protests and interventions in lieu of paper, using the FERC Online links at *http://www.ferc.gov.* To facilitate electronic service, persons with Internet access who will eFile a document and/or be listed as a contact for an intervenor must create and validate an eRegistration account using the eRegistration link. Select the eFiling link to log on and submit the intervention or protests.

Persons unable to file electronically should submit an original and 14 copies of the intervention or protest to the Federal Energy Regulatory Commission, 888 First St., NE., Washington, DC 20426.

The filings in the above proceedings are accessible in the Commission's eLibrary system by clicking on the appropriate link in the above list. They are also available for review in the Commission's Public Reference Room in Washington, DC. There is an eSubscription link on the Web site that enables subscribers to receive e-mail notification when a document is added to a subscribed docket(s). For assistance with any FERC Online service, please e-mail *FERCOnlineSupport@ferc.gov.* or call (866) 208–3676 (toll free). For TTY, call (202) 502–8659.

Nathaniel J. Davis, Sr.,

Deputy Secretary.

[FR Doc. 2010–9793 Filed 4–27–10; 8:45 am]

BILLING CODE 6717–01–P

DEPARTMENT OF ENERGY

Federal Energy Regulatory Commission

Combined Notice of Filings No. 2

April 19, 2010.

Take notice that the Commission has received the following Natural Gas Pipeline Rate and Refund Report filings:

Docket Numbers: RP10–467–001.

Applicants: Dauphin Island Gathering Partners.

Description: Dauphin Island Gathering Partners submits the Substitute Ninth Revised Sheet No. 7 *et al.* to FERC Gas Tariff, Original Volume No. 1.

Filed Date: 04/14/2010.

Accession Number: 20100414–0208.

Comment Date: 5 p.m. Eastern Time on Monday, April 26, 2010.

Docket Numbers: RP09–566–001.

Applicants: Cheyenne Plains Gas Pipeline Company LLC.

Description: Cheyenne Plains Gas Pipeline Company, LLC submits Second Revised Sheet 308 *et al.* to FERC Gas Tariff, Original Volume 1.

Filed Date: 04/15/2010.

Accession Number: 20100415–0209.

Comment Date: 5 p.m. Eastern Time on Tuesday, April 27, 2010.

Docket Numbers: RP10–21–004.

Applicants: Florida Gas Transmission Company, LLC.

Description: Florida Gas Transmission Company, LLC submits Substitute Second Revised Sheet 2 *et al.* to FERC Gas Tariff, Fourth Revised Volume 1, to be effective 4/1/10.

Filed Date: 04/15/2010.

Accession Number: 20100416–0201.

Comment Date: 5 p.m. Eastern Time on Tuesday, April 27, 2010.

Docket Numbers: RP10–423–001.

Applicants: Florida Gas Transmission Company, LLC.

Description: Florida Gas Transmission Company submits Sub Twentieth Revised Sheet 7 *et al.* to its FERC Gas Tariff, Fourth Revised Volume 1.

Filed Date: 04/15/2010.

Accession Number: 20100415–0210.

Comment Date: 5 p.m. Eastern Time on Tuesday, April 27, 2010.

Any person desiring to protest this filing must file in accordance with Rule 211 of the Commission's Rules of Practice and Procedure (18 CFR 385.211). Protests to this filing will be considered by the Commission in determining the appropriate action to be taken, but will not serve to make protestants parties to the proceeding. Such protests must be filed on or before 5 p.m. Eastern on the specified comment date. Anyone filing a protest must serve a copy of that document on all the parties to the proceeding.

The Commission encourages electronic submission of protests in lieu of paper using the "eFiling" link at *http://www.ferc.gov.* Persons unable to file electronically should submit an original and 14 copies of the protest to the Federal Energy Regulatory Commission, 888 First Street, NE., Washington, DC 20426.

This filing is accessible on-line at *http://www.ferc.gov,* using the "eLibrary" link and is available for review in the Commission's Public Reference Room in Washington, DC. There is an "eSubscription" link on the Web site that enables subscribers to receive e-mail notification when a document is added to a subscribed docket(s). For assistance with any FERC Online service, please e-mail *FERCOnlineSupport@ferc.gov,* or call (866) 208–3676 (toll free). For TTY, call (202) 502–8659.

Nathaniel J. Davis, Sr.,

Deputy Secretary.

[FR Doc. 2010–9792 Filed 4–27–10; 8:45 am]

BILLING CODE 6717–01–P

DEPARTMENT OF ENERGY

Federal Energy Regulatory Commission

Combined Notice of Filings

April 15, 2010.

Take notice that the Commission has received the following Natural Gas Pipeline Rate and Refund Report filings:

Docket Numbers: RP10–600–000.

Applicants: Gulf South Pipeline Company, LP.

Description: Gulf South Pipeline Company, LP submits the Negotiated Rate Capacity Release Agreement with Oneok Energy Services Company, LP.

Filed Date: 04/14/2010.

Accession Number: 20100414–0209.

Comment Date: 5 p.m. Eastern Time on Monday, April 26, 2010.

Docket Numbers: RP10–601–000.

Applicants: Gulf South Pipeline Company, LP.

Description: Gulf South Pipeline Company, LP submits Seventh Revised Sheet No. 1 *et al.* to FERC Gas Tariff, Sixth Revised Volume No. 1, to be effective 5/14/10.

Filed Date: 04/14/2010.

Accession Number: 20100414–0210.

Comment Date: 5 p.m. Eastern Time on Monday, April 26, 2010.

Docket Numbers: RP10–602–000.

Applicants: Williston Basin Interstate Pipeline Company.

Description: Williston Basin Interstate Pipeline Company submits Ninth Revised Sheet No. 228 *et al.* to FERC Gas Tariff, Second Revised Volume No. 1, to be effective 5/14/10.

Filed Date: 04/14/2010.

Accession Number: 20100414–0211.

Comment Date: 5 p.m. Eastern Time on Monday, April 26, 2010.

Docket Numbers: RP10–603–000.

Applicants: Stingray Pipeline Company, LLC.

Description: Stingray Pipeline Company, LLC submits Seventh Revised Sheet 139 *et al.* to FERC Gas Tariff, First Revised Volume 1, to be effective 5/14/10.

Filed Date: 04/14/2010.

Accession Number: 20100414–0227.

Comment Date: 5 p.m. Eastern Time on Monday, April 26, 2010.

Docket Numbers: RP10–604–000.

Applicants: Mississippi Canyon Gas Pipeline, LLC.

Description: Mississippi Canyon Gas Pipeline, LLC submits Third Revised Sheet 109 *et al.* to FERC Gas Tariff, First Revised Volume 1, to be effective 5/14/10.

Filed Date: 04/14/2010.

Accession Number: 20100414–0228.

Comment Date: 5 p.m. Eastern Time on Monday, April 26, 2010.

Docket Numbers: RP10–605–000.

Applicants: Algonquin Gas Transmission, LLC.

Description: Algonquin Gas Transmission, LLC submits Second Revised sheet 55 *et al.* of its FERC Gas Tariff, Fifth Revised Volume 1, to be effective 1/5/05.

Filed Date: 04/14/2010.

Accession Number: 20100414–0231.

Comment Date: 5 p.m. Eastern Time on Monday, April 26, 2010.

Any person desiring to intervene or to protest in any of the above proceedings must file in accordance with Rules 211 and 214 of the Commission's Rules of Practice and Procedure (18 CFR 385.211 and 385.214) on or before 5 p.m. Eastern time on the specified comment date. It is not necessary to separately intervene again in a subdocket related to a compliance filing if you have previously intervened in the same docket. Protests will be considered by the Commission in determining the appropriate action to be taken, but will not serve to make protestants parties to the proceeding. Anyone filing a motion to intervene or protest must serve a copy of that document on the Applicant. In reference to filings initiating a new proceeding, interventions or protests submitted on or before the comment deadline need not be served on persons other than the Applicant.

The Commission encourages electronic submission of protests and interventions in lieu of paper, using the FERC Online links at *http://www.ferc.gov.* To facilitate electronic service, persons with Internet access who will eFile a document and/or be listed as a contact for an intervenor must create and validate an eRegistration account using the eRegistration link. Select the eFiling link to log on and submit the intervention or protests.

Persons unable to file electronically should submit an original and 14 copies of the intervention or protest to the Federal Energy Regulatory Commission, 888 First St. NE., Washington, DC 20426.

The filings in the above proceedings are accessible in the Commission's eLibrary system by clicking on the appropriate link in the above list. They are also available for review in the Commission's Public Reference Room in Washington, DC. There is an eSubscription link on the Web site that enables subscribers to receive e-mail notification when a document is added to a subscribed docket(s). For assistance with any FERC Online service, please e-mail *FERCOnlineSupport@ferc.gov.* or call (866) 208–3676 (toll free). For TTY, call (202) 502–8659.

Nathaniel J. Davis, Sr.,

Deputy Secretary.

[FR Doc. 2010–9790 Filed 4–27–10; 8:45 am]

BILLING CODE 6717–01–P

DEPARTMENT OF ENERGY

Federal Energy Regulatory Commission

Combined Notice of Filings No. 1

April 14, 2010.

Take notice that the Commission has received the following Natural Gas Pipeline Rate and Refund Report filings:

Docket Numbers: RP10–597–000.

Applicants: Northern Natural Gas Company.

Description: Northern Natural Gas Company submits for filing a report of the penalty and daily delivery variance charge revenues for the period November 1, 2008 through October 31, 2009 that have been credited to shippers.

Filed Date: 04/13/2010.

Accession Number: 20100413–5042.

Comment Date: 5 p.m. Eastern Time on Monday, April 26, 2010.

Docket Numbers: RP10–598–000.

Applicants: Centra Pipelines Minnesota.

Description: Centra Pipelines Minnesota, Inc submits Seventh Revised Sheet 35 *et al.* to FERC Gas Tariff, Second Revised Volume 2, the Index of Shippers to be effective 6/1/10.

Filed Date: 04/13/2010.

Accession Number: 20100413–0207.

Comment Date: 5 p.m. Eastern Time on Monday, April 26, 2010.

Docket Numbers: RP10–599–000.

Applicants: Texas Eastern Transmission, LP.

Description: Texas Eastern Transmission, LP submits Original Sheet 121K *et al.* to FERC Gas Tariff, Seventh Revised Volume 1 to be effective 4/10/10.

Filed Date: 04/13/2010.

Accession Number: 20100413–0216.

Comment Date: 5 p.m. Eastern Time on Monday, April 26, 2010.

Any person desiring to intervene or to protest in any of the above proceedings must file in accordance with Rules 211 and 214 of the Commission's Rules of Practice and Procedure (18 CFR 385.211 and 385.214) on or before 5 p.m. Eastern time on the specified comment date. It is not necessary to separately intervene again in a subdocket related to a compliance filing if you have previously intervened in the same docket. Protests will be considered by the Commission in determining the appropriate action to be taken, but will not serve to make protestants parties to the proceeding. Anyone filing a motion to intervene or protest must serve a copy of that document on the Applicant. In reference to filings initiating a new proceeding, interventions or protests submitted on or before the comment deadline need not be served on persons other than the Applicant.

The Commission encourages electronic submission of protests and interventions in lieu of paper, using the FERC Online links at *http://www.ferc.gov.* To facilitate electronic service, persons with Internet access who will eFile a document and/or be listed as a contact for an intervenor must create and validate an eRegistration account using the eRegistration link. Select the eFiling link to log on and submit the intervention or protests.

Persons unable to file electronically should submit an original and 14 copies of the intervention or protest to the Federal Energy Regulatory Commission, 888 First St. NE., Washington, DC 20426.

The filings in the above proceedings are accessible in the Commission's eLibrary system by clicking on the appropriate link in the above list. They are also available for review in the

Commission's Public Reference Room in Washington, DC. There is an eSubscription link on the Web site that enables subscribers to receive e-mail notification when a document is added to a subscribed docket(s). For assistance with any FERC Online service, please email *FERCOnlineSupport@ferc.gov.* or call (866) 208–3676 (toll free). For TTY, call (202) 502–8659.

Nathaniel J. Davis, Sr.,

Deputy Secretary.

[FR Doc. 2010–9788 Filed 4–27–10; 8:45 am]

BILLING CODE 6717–01–P

ENVIRONMENTAL PROTECTION AGENCY

[EPA–HQ–OECA–2009–0414; FRL–9142–9]

Agency Information Collection Activities; Submission to OMB for Review and Approval; Comment Request; NSPS for Automobile and Light Duty Truck Surface Coating Operations (Renewal), EPA ICR Number 1064.16, OMB Control Number 2060–0034

AGENCY: Environmental Protection Agency (EPA).

ACTION: Notice.

SUMMARY: In compliance with the Paperwork Reduction Act (44 U.S.C. 3501 *et seq.*), this document announces that an Information Collection Request (ICR) has been forwarded to the Office of Management and Budget (OMB) for review and approval. This is a request to renew an existing approved collection. The ICR which is abstracted below describes the nature of the collection and the estimated burden and cost.

DATES: Additional comments may be submitted on or before May 28, 2010.

ADDRESSES: Submit your comments, referencing docket ID number EPA–HQ–OECA–2009–0414, to (1) EPA online using *http://www.regulations.gov* (our preferred method), or by e-mail to *docket.oeca@epa.gov,* or by mail to: EPA Docket Center (EPA/DC), Environmental Protection Agency, Enforcement and Compliance Docket and Information Center, mail code 28221T, 1200 Pennsylvania Avenue, NW., Washington, DC 20460, and (2) OMB at: Office of Information and Regulatory Affairs, Office of Management and Budget (OMB), Attention: Desk Officer for EPA, 725 17th Street, NW., Washington, DC 20503.

FOR FURTHER INFORMATION CONTACT: John Schaefer, Office of Air Quality Planning and Standards, Sector Policies and Programs Division (D243–05), Measurement Policy Group, Environmental Protection Agency, Research Triangle Park, North Carolina 27711; telephone number: (919) 541–0296; fax number: (919) 541–3207; e-mail address: *schaefer.john@epa.gov.*

SUPPLEMENTARY INFORMATION: EPA has submitted the following ICR to OMB for review and approval according to the procedures prescribed in 5 CFR 1320.12. On July 8, 2009 (74 FR 32581), EPA sought comments on this ICR pursuant to 5 CFR 1320.8(d). EPA received no comments. Any additional comments on this ICR should be submitted to EPA and OMB within 30 days of this notice.

EPA has established a public docket for this ICR under docket ID number EPA–HQ–OECA–2009–0414, which is available for public viewing online at *http://www.regulations.gov,* in person viewing at the Enforcement and Compliance Docket in the EPA Docket Center (EPA/DC), EPA West, Room 3334, 1301 Constitution Avenue, NW., Washington, DC. The EPA Docket Center Public Reading Room is open from 8:30 a.m. to 4:30 p.m., Monday through Friday, excluding legal holidays. The telephone number for the Reading Room is (202) 566–1744, and the telephone number for the Enforcement and Compliance Docket is (202) 566–1752.

Use EPA's electronic docket and comment system at *http://www.regulations.gov,* to submit or view public comments, access the index listing of the contents of the docket, and to access those documents in the docket that are available electronically. Once in the system, select "docket search," then key in the docket ID number identified above. Please note that EPA's policy is that public comments, whether submitted electronically or in paper, will be made available for public viewing at *http://www.regulations.gov,* as EPA receives them and without change, unless the comment contains copyrighted material, Confidential Business Information (CBI), or other information whose public disclosure is restricted by statute. For further information about the electronic docket, go to *http://www.regulations.gov.*

Title: NSPS for Automobile and Light Duty Truck Surface Coating Operations (Renewal).

ICR Numbers: EPA ICR Number 1064.16, OMB Control Number 2060–0034.

ICR Status: This ICR is scheduled to expire on June 30, 2010. Under OMB regulations, the Agency may continue to conduct or sponsor the collection of information while this submission is pending at OMB. An Agency may not conduct or sponsor, and a person is not required to respond to, a collection of information unless it displays a currently valid OMB control number. The OMB control numbers for EPA's regulations in title 40 of the CFR, after appearing in the **Federal Register** when approved, are listed in 40 CFR part 9, and displayed either by publication in the **Federal Register** or by other appropriate means, such as on the related collection instrument or form, if applicable. The display of OMB control numbers in certain EPA regulations is consolidated in 40 CFR part 9.

Abstract: The New Source Performance Standards (NSPS) for Automobile and Light Duty Truck Surface Coating Operations (40 CFR part 60, subpart MM) were proposed on October 5, 1979, and promulgated on December 24, 1980 (45 *FR* 85415).

Owners or operators of the affected facilities must make an initial notification, performance tests, periodic reports, and maintain records of the occurrence and duration of any startup, shutdown, or malfunction in the operation of an affected facility, or any period during which the monitoring system is inoperative. Reports, at a minimum, are required semiannually.

Burden Statement: The annual public reporting and recordkeeping burden for this collection of information is estimated to average 483 hours per response. Burden means the total time, effort, or financial resources expended by persons to generate, maintain, retain, or disclose or provide information to or for a Federal agency. This includes the time needed to review instructions; develop, acquire, install, and utilize technology and systems for the purposes of collecting, validating, and verifying information, processing and maintaining information, and disclosing and providing information; adjust the existing ways to comply with any previously applicable instructions and requirements which have subsequently changed; train personnel to be able to respond to a collection of information; search data sources; complete and review the collection of information; and transmit or otherwise disclose the information.

Respondents/Affected Entities: Automobile and light duty truck surface coating operations.

Estimated Number of Respondents: 54.

Frequency of Response: Initially, occasionally, quarterly, and semiannually.

Estimated Total Annual Hour Burden: 156,362

Estimated Total Annual Cost: $14,882,842, which includes: $14,790,142 in labor costs, $1,700 in capital/startup costs, and $91,000 in operation and maintenance (O&M) costs.

Changes in the Estimates: There is a decrease in the average estimated burden as currently identified in the OMB Inventory of Approved Burdens. This decrease is not due to any program changes. The total estimated annual hour burden remained the same but the change in the average burden estimates occurred due to an incorrect calculation of the number of responses in the previous ICR. Further, the reduction in Agency burden from 760 to 708 is a result of a rounding error in the previous burden estimate.

Dated: April 22, 2010.

John Moses,

Director, Collection Strategies Division.

[FR Doc. 2010–9826 Filed 4–27–10; 8:45 am]

BILLING CODE 6560–50–P

ENVIROMENTAL PROTECTION AGENCY

[FRL–9142–6]

Clean Air Act Operating Permit Program; Petition To Object to Title V Permit for Wheelabrator Baltimore, L.P., Baltimore City, MD

AGENCY: Environmental Protection Agency (EPA).

ACTION: Notice of final action.

SUMMARY: Pursuant to section 505(b)(2) of the Clean Air Act (CAA), the EPA Administrator signed an order, dated April 14, 2010, partially granting and partially denying a petition to object to a state operating permit proposed to be issued by the Maryland Department of the Environment (MDE) to Wheelabrator Baltimore, L.P. for its facility located in Baltimore City, Maryland. This order constitutes final action on the petition filed by the Environmental Integrity Project, the Baltimore Harbor Waterkeeper, Inc., and Clean Water Action (Petitioners), dated May 21, 2009, requesting that the Administrator object to the issuance of the proposed title V permit.

Pursuant to section 505(b)(2) of the CAA, the petitioner may seek judicial review of those portions of the petition which EPA denied in the United States Court of Appeals for the appropriate circuit. Any petition for review shall be filed within 60 days of this notice in accordance with the requirements of section 307 of the CAA.

ADDRESSES: Copies of the final order, the petition, and all pertinent information relating thereto are on file at the following location: Environmental Protection Agency, Region III, Air Protection Division (APD), 1650 Arch St., Philadelphia, Pennsylvania 19103. The final order is also available electronically at the following Web site: *http://www.epa.gov/region07/programs/artd/air/title5/petitionb/petitiondb.htm.*

FOR FURTHER INFORMATION CONTACT: Amy Caprio, Air Protection Division, EPA Region III, telephone (215) 814–2156, or by e-mail at *caprio.amy@epa.gov.*

SUPPLEMENTARY INFORMATION: The Clean Air Act (CAA) affords EPA a 45-day period to review and object to, as appropriate, operating permits proposed by state permitting authorities. Section 505(b)(2) of the CAA authorizes any person to petition the EPA Administrator within 60 days after the expiration of this review period to object to a state operating permit if EPA has not done so. Petitions must be based only on objections raised with reasonable specificity during the public comment period, unless the petitioner demonstrates that it was impracticable to raise these issues during the comment period or that the grounds for objection or other issue arose after the comment period.

EPA received a petition from the Petitioners, dated May 21, 2009, requesting that EPA object to the issuance of the proposed title V permit for Wheelabrator Baltimore, L.P. because: (1) Of illegal weakening of the title V permit conditions; (2) inadequate monitoring methodology; and (3) inadequate monitoring requirements for particulate matter, mercury, lead, hydrogen chloride and dioxins/furans. The order explains the reasons behind EPA's decision to partially grant and partially deny the petition for objection.

Dated: April 19, 2010.

W.C. Early,

Acting Regional Administrator, Region III.

[FR Doc. 2010–9825 Filed 4–27–10; 8:45 am]

BILLING CODE 6560–50–P

ENVIRONMENTAL PROTECTION AGENCY

[EPA–HQ–OPP–2009–0681; FRL–8822–3]

Draft Test Guidelines; Reopening of Comment Period

AGENCY: Environmental Protection Agency (EPA).

ACTION: Notice; reopening of comment period.

SUMMARY: EPA issued a notice in the **Federal Register** of January 27, 2010, concerning four draft test guidelines for product performance of public health uses of antimicrobial agents. EPA received a request from the public to extend the comment period. After further consideration, EPA decided to reopen the comment period to allow additional time for public comments. This document reopens the comment period for 60 days.

DATES: Comments, identified by docket identification (ID) number EPA–HQ–OPP–2009–0681, must be received on or before June 28, 2010.

ADDRESSES: Follow the detailed instructions as provided under **ADDRESSES** in the **Federal Register** document of January 27, 2010.

FOR FURTHER INFORMATION CONTACT: Michele Wingfield, Antimicrobials Division (7510P), Office of Pesticide Programs, Environmental Protection Agency, 1200 Pennsylvania Ave., NW., Washington, DC 20460–0001; telephone number: (703) 308–6349; e-mail address: *wingfield.michele@epa.gov*.

SUPPLEMENTARY INFORMATION: This document reopens the public comment period established in the **Federal Register** issue of January 27, 2010 (75 FR 4380) (FRL–8437–2). In that document, EPA announced the availability of four draft test guidelines for product performance of public health uses of antimicrobial agents for public review and comment. EPA is hereby reopening the comment period.

To submit comments, or access the docket identified as docket ID number EPA–HQ–OPP–2009–0681, please go to *http://www.regulations.gov*. Please follow the on-line instructions for submitting comments, or follow the detailed instructions as provided under **ADDRESSES** in the January 27, 2010 **Federal Register** document. If you have questions, consult the person listed under **FOR FURTHER INFORMATION CONTACT**.

List of Subjects

Environmental protection, Chemical testing, Test guidelines.

Dated: April 19, 2010.

Steven Bradbury,

Acting Director, Office of Pesticide Programs.

[FR Doc. 2010–9750 Filed 4–27–10; 8:45 am]

BILLING CODE 6560–50–S

ENVIRONMENTAL PROTECTION AGENCY

[EPA–HQ–OPP–2009-0879; FRL–8821–7]

Exposure Modeling Public Meeting

AGENCY: Environmental Protection Agency (EPA).

ACTION: Notice.

SUMMARY: An Exposure Modeling Public Meeting (EMPM) will be held for one day on July 27, 2010. This notice announces the location and time for the meeting and sets forth the tentative agenda topics.

DATES: The meeting will be held on July 27, 2010 from 9:00 a.m. to 4:00 p.m.

To request accommodation of a disability, please contact the person listed under **FOR FURTHER INFORMATON CONTACT**, preferably at least 10 days prior to the meeting, to give EPA as much time as possible to process your request.

ADDRESSES: The meeting will be held at the Environmental Protection Agency, Office of Pesticide Programs (OPP), One Potomac Yard (South Building), 1st Floor South Conference Room, 2777 S. Crystal Drive, Arlington, VA 22202.

FOR FURTHER INFORMATION CONTACT: Chuck Peck, Environmental Fate and Effects Division (7507P), Office of Pesticide Programs, Environmental Protection Agency, 1200 Pennsylvania Ave., NW., Washington, DC 20460–0001; telephone number: (703) 347–8064; fax number: (703) 305-6309; e-mail address: *peck.charles@epa.gov*.

SUPPLEMENTARY INFORMATION:

I. General Information

A. Does this Action Apply to Me?

You may be potentially affected by this action if you are required to conduct testing of chemical substances under the Toxic Substances Control Act (TSCA), the Federal Food, Drug, and Cosmetic Act (FFDCA), or the Federal Insecticide, Fungicide, and Rodenticide Act (FIFRA). Since other entities may also be interested, the Agency has not attempted to describe all the specific entities that may be affected by this action. If you have any questions regarding the applicability of this action to a particular entity, consult the person listed under **FOR FURTHER INFORMATION CONTACT**.

B. How Can I Get Copies of this Document and Other Related Information?

EPA has established a docket for this action under docket ID number EPA–HQ–OPP–2009–0879. Publicly available docket materials are available either in the electronic docket at *http://www.regulations.gov*, or, if only available in hard copy, at the Office of Pesticide Programs (OPP) Regulatory Public Docket in Rm. S–4400, One Potomac Yard (South Bldg.), 2777 S. Crystal Dr., Arlington, VA. The hours of operation of this Docket Facility are from 8:30 a.m. to 4 p.m., Monday through Friday, excluding legal holidays. The Docket Facility telephone number is (703) 305–5805.

II. Background

On a biannual interval, an Exposure Modeling Public Meeting will be held for presentation and discussion of current issues in modeling pesticide fate, transport, and exposure of risk assessment in a regulatory context. Meeting dates and abstract requests are announced through the "empmlist" forum on the LYRIS list server at *https://lists.epa.gov/read/all_forums/*.

III. How Can I Request to Participate in this Meeting?

You may submit a request to participate in this meeting to the person listed under **FOR FURTHER INFORMATION CONTACT**. Do not submit any information in your request that is considered CBI. Requests to participate in the meeting, identified by docket ID number EPA–HQ–OPP–2009–0879, must be received on or before May 13, 2010.

IV. Tentative Topics for the Meeting

Tentative topics for the meeting will include presentations related to ground water modeling and pesticide modeling refinements in agricultural and urban environs. Presentations submitted for the cancelled January 2010 EMPM will be tentatively scheduled for the July 27, 2010 EMPM meeting, provided the presenters are available.

List of Subjects

Environmental Protection, Modeling, Monitoring, Pesticides.

Dated: April 10, 2010.

Donald J. Brady,

Director, Environmental Fate and Effect Division, Office of Pesticide Programs.

[FR Doc. 2010–9342 Filed 4–27–10; 8:45 am]

BILLING CODE 6560–50–S

ENVIRONMENTAL PROTECTION AGENCY

[EPA–HQ–OPP–2010-0265; FRL–8822–8]

Petition from Pesticide Poisoning Victims United; Notice of Availability

AGENCY: Environmental Protection Agency (EPA).

ACTION: Notice.

SUMMARY: EPA is announcing the availability of a January 25, 2010 petition from Pesticide Poisoning Victims United, a division of the Pitchfork Rebellion. The petitioners, who reside in Lane County, Oregon, ask the Agency to undertake a number of actions to protect potentially affected individuals from pesticides in their area.

DATES: Comments must be received on or before June 28, 2010.

ADDRESSES: Submit your comments, identified by docket identification (ID) number EPA–HQ–OPP–2010–0265, by one of the following methods:

- *Federal eRulemaking Portal*: *http://www.regulations.gov*. Follow the on-line instructions for submitting comments.
- *Mail*: Office of Pesticide Programs (OPP) Regulatory Public Docket (7502P), Environmental Protection Agency, 1200 Pennsylvania Ave., NW., Washington, DC 20460–0001.
- *Delivery*: OPP Regulatory Public Docket (7502P), Environmental Protection Agency, Rm. S–4400, One Potomac Yard (South Bldg.), 2777 S. Crystal Dr., Arlington, VA. Deliveries are only accepted during the Docket Facility's normal hours of operation (8:30 a.m. to 4 p.m., Monday through Friday, excluding legal holidays). Special arrangements should be made for deliveries of boxed information. The Docket Facility telephone number is (703) 305–5805.

Instructions: Direct your comments to docket ID number EPA–HQ–OPP–2010–0265. EPA's policy is that all comments received will be included in the docket without change and may be made available on-line at *http://www.regulations.gov*, including any personal information provided, unless the comment includes information claimed to be Confidential Business Information (CBI) or other information whose disclosure is restricted by statute. Do not submit information that you consider to be CBI or otherwise protected through regulations.gov or e-mail. The regulations.gov website is an "anonymous access" system, which means EPA will not know your identity or contact information unless you provide it in the body of your comment. If you send an e-mail comment directly to EPA without going through regulations.gov, your e-mail address will be automatically captured and included as part of the comment that is placed in the docket and made available on the Internet. If you submit an electronic comment, EPA recommends that you include your name and other

contact information in the body of your comment and with any disk or CD-ROM you submit. If EPA cannot read your comment due to technical difficulties and cannot contact you for clarification, EPA may not be able to consider your comment. Electronic files should avoid the use of special characters, any form of encryption, and be free of any defects or viruses.

Docket: All documents in the docket are listed in the docket index available at *http://www.regulations.gov*. Although listed in the index, some information is not publicly available, e.g., CBI or other information whose disclosure is restricted by statute. Certain other material, such as copyrighted material, is not placed on the Internet and will be publicly available only in hard copy form. Publicly available docket materials are available either in the electronic docket at *http://www.regulations.gov*, or, if only available in hard copy, at the OPP Regulatory Public Docket in Rm. S–4400, One Potomac Yard (South Bldg.), 2777 S. Crystal Dr., Arlington, VA. The hours of operation of this Docket Facility are from 8:30 a.m. to 4 p.m., Monday through Friday, excluding legal holidays. The Docket Facility telephone number is (703) 305–5805.

FOR FURTHER INFORMATION CONTACT: Jill Bloom, Pesticide Re-evaluation Division, Office of Pesticide Programs, Environmental Protection Agency, 1200 Pennsylvania Ave., NW., Washington, DC 20460–0001; telephone number: (703) 308–8019; fax number: (703) 308–7070; e-mail address: *bloom.jill@epa.gov*.

SUPPLEMENTARY INFORMATION:

I. General Information

A. Does this Action Apply to Me?

You may be potentially affected by this action if you are a timber producer, pesticide applicator, or believe you may be affected by pesticide drift.

This listing is not intended to be exhaustive, but rather provides a guide for readers regarding entities likely to be affected by this action. Other types of entities not listed in this unit could also be affected. If you have any questions regarding the applicability of this action to a particular entity, consult the person listed under **FOR FURTHER INFORMATION CONTACT**.

B. What Should I Consider as I Prepare My Comments for EPA?

1. *Submitting CBI (Confidential Business Information)*. Do not submit this information to EPA through regulations.gov or e-mail. Clearly mark the part or all of the information that you claim to be CBI. For CBI information in a disk or CD-ROM that you mail to EPA, mark the outside of the disk or CD-ROM as CBI and then identify electronically within the disk or CD-ROM the specific information that is claimed as CBI. In addition to one complete version of the comment that includes information claimed as CBI, a copy of the comment that does not contain the information claimed as CBI must be submitted for inclusion in the public docket. Information so marked will not be disclosed except in accordance with procedures set forth in 40 CFR part 2.

2. *Tips for preparing your comments*. When submitting comments, remember to:

i. Identify the document by docket ID number and other identifying information (subject heading, **Federal Register** date and page number).

ii. Follow directions. The Agency may ask you to respond to specific questions or organize comments by referencing a Code of Federal Regulations (CFR) part or section number.

iii. Explain why you agree or disagree; suggest alternatives and substitute language for your requested changes.

iv. Describe any assumptions and provide any technical information and/or data that you used.

v. If you estimate potential costs or burdens, explain how you arrived at your estimate in sufficient detail to allow for it to be reproduced.

vi. Provide specific examples to illustrate your concerns and suggest alternatives.

vii. Explain your views as clearly as possible, avoiding the use of profanity or personal threats.

viii. Make sure to submit your comments by the comment period deadline identified.

II. What Action is the Agency Taking?

EPA is announcing availability of a petition from Pesticide Poisoning Victims United, a Division of the Pitchfork Rebellion under docket ID number EPA–HQ–2010–0265.

List of Subjects

Environmental Protection, Pesticides, and Pests.

Dated: April 19, 2010.

Peter Caulkins,

Acting Director, Pesticide Re-evaluation Division, Office of Pesticide Programs.

[FR Doc. 2010–9744 Filed 4–27–10; 8:45 am]

BILLING CODE 6560–50–S

ENVIRONMENTAL PROTECTION AGENCY

[EPA–HQ–OPP–2009–0332; FRL–8822–6]

Methyl Parathion; Notice of Receipt of Request to Voluntarily Cancel Pesticide Registrations

AGENCY: Environmental Protection Agency (EPA).

ACTION: Notice.

SUMMARY: In accordance with section 6(f)(1) of the Federal Insecticide, Fungicide, and Rodenticide Act (FIFRA), as amended, EPA is issuing a notice of receipt of requests by the registrants to voluntarily cancel their registrations of products containing the pesticide methyl parathion. The requests would delete methyl parathion use in or on alfalfa, almonds, barley, canola/rapeseed, corn (field, pop, and sweet), cotton, grass (forage), oats, onions, potatoes (sweet and white), rice, rye, soybeans, sunflowers, walnuts, and wheat. The requests would terminate the last methyl parathion products registered for use in the United States. EPA intends to grant these requests at the close of the comment period for this announcement unless the Agency receives substantive comments within the comment period that would merit its further review of the requests, or unless the registrants withdraw their requests. If these requests are granted, any sale, distribution, or use of products listed in this notice will be permitted after the registration has been cancelled only if such sale, distribution, or use is consistent with the terms as described in the final order.

DATES: Comments must be received on or before May 28, 2010.

ADDRESSES: Submit your comments, identified by docket identification (ID) number EPA–HQ–OPP–2009–0332, by one of the following methods:

• *Federal eRulemaking Portal*: *http://www.regulations.gov*. Follow the on-line instructions for submitting comments.

• *Mail*: Office of Pesticide Programs (OPP) Regulatory Public Docket (7502P), Environmental Protection Agency, 1200 Pennsylvania Ave., NW., Washington, DC 20460–0001.

• *Delivery*: OPP Regulatory Public Docket (7502P), Environmental Protection Agency, Rm. S–4400, One Potomac Yard (South Bldg.), 2777 S. Crystal Dr., Arlington, VA. Deliveries are only accepted during the Docket Facility's normal hours of operation (8:30 a.m. to 4 p.m., Monday through Friday, excluding legal holidays). Special arrangements should be made for deliveries of boxed information. The

Docket Facility telephone number is (703) 305–5805.

Instructions: Direct your comments to docket ID number EPA–HQ–OPP–2009–0332. EPA's policy is that all comments received will be included in the docket without change and may be made available on-line at *http://www.regulations.gov*, including any personal information provided, unless the comment includes information claimed to be Confidential Business Information (CBI) or other information whose disclosure is restricted by statute. Do not submit information that you consider to be CBI or otherwise protected through regulations.gov or e-mail. The regulations.gov website is an "anonymous access" system, which means EPA will not know your identity or contact information unless you provide it in the body of your comment. If you send an e-mail comment directly to EPA without going through regulations.gov, your e-mail address will be automatically captured and included as part of the comment that is placed in the docket and made available on the Internet. If you submit an electronic comment, EPA recommends that you include your name and other contact information in the body of your comment and with any disk or CD-ROM you submit. If EPA cannot read your comment due to technical difficulties and cannot contact you for clarification, EPA may not be able to consider your comment. Electronic files should avoid the use of special characters, any form of encryption, and be free of any defects or viruses.

Docket: All documents in the docket are listed in the docket index available at *http://www.regulations.gov*. Although listed in the index, some information is not publicly available, e.g., CBI or other information whose disclosure is restricted by statute. Certain other material, such as copyrighted material, is not placed on the Internet and will be publicly available only in hard copy form. Publicly available docket materials are available either in the electronic docket at *http://www.regulations.gov*, or, if only available in hard copy, at the OPP Regulatory Public Docket in Rm. S–4400, One Potomac Yard (South Bldg.), 2777 S. Crystal Dr., Arlington, VA. The hours of operation of this Docket Facility are from 8:30 a.m. to 4 p.m., Monday through Friday, excluding legal holidays. The Docket Facility telephone number is (703) 305–5805.

FOR FURTHER INFORMATION CONTACT: Kelly Ballard, Pesticide Re-evaluation Division (7508P), Office of Pesticide Programs, Environmental Protection Agency, 1200 Pennsylvania Ave., NW., Washington, DC 20460–0001; telephone number: (703) 305–8126; fax number: (703) 305–5290; e-mail address: *ballard.kelly@epa.gov*.

SUPPLEMENTARY INFORMATION:

I. General Information

A. Does this Action Apply to Me?

This action is directed to the public in general, and may be of interest to a wide range of stakeholders including environmental, human health, and agricultural advocates; the chemical industry; pesticide users; and members of the public interested in the sale, distribution, or use of pesticides. Since others also may be interested, the Agency has not attempted to describe all the specific entities that may be affected by this action. If you have any questions regarding the applicability of this action to a particular entity, consult the person listed under **FOR FURTHER INFORMATION CONTACT**.

B. What Should I Consider as I Prepare My Comments for EPA?

1. *Submitting CBI.* Do not submit this information to EPA through regulations.gov or e-mail. Clearly mark the part or all of the information that you claim to be CBI. For CBI information in a disk or CD-ROM that you mail to EPA, mark the outside of the disk or CD-ROM as CBI and then identify electronically within the disk or CD-ROM the specific information that is claimed as CBI. In addition to one complete version of the comment that includes information claimed as CBI, a copy of the comment that does not contain the information claimed as CBI must be submitted for inclusion in the public docket. Information so marked will not be disclosed except in accordance with procedures set forth in 40 CFR part 2.

2. *Tips for preparing your comments.* When submitting comments, remember to:

i. Identify the document by docket ID number and other identifying information (subject heading, **Federal Register** date and page number).

ii. Follow directions. The Agency may ask you to respond to specific questions or organize comments by referencing a Code of Federal Regulations (CFR) part or section number.

iii. Explain why you agree or disagree; suggest alternatives and substitute language for your requested changes.

iv. Describe any assumptions and provide any technical information and/or data that you used.

v. If you estimate potential costs or burdens, explain how you arrived at your estimate in sufficient detail to allow for it to be reproduced.

vi. Provide specific examples to illustrate your concerns and suggest alternatives.

vii. Explain your views as clearly as possible, avoiding the use of profanity or personal threats.

viii. Make sure to submit your comments by the comment period deadline identified.

II. Background on the Receipt of Requests to Cancel and/or Amend Registrations to Delete Uses

This notice announces receipt by EPA of a request from registrants Cheminova A/S, Cheminova, Inc., and United Phosphorus, Inc. to cancel methyl parathion product registrations. Methyl parathion is a restricted use organophosphate insecticide and acaricide registered for use on alfalfa, almonds, barley, canola/rapeseed, corn (field, pop, and sweet), cotton, grass (forage), oats, onions, potatoes (sweet and white), rice, rye, soybeans, sunflowers, walnuts, and wheat, with the majority of use occurring on cotton, corn, and rice. There are no residential uses. On March 29, 2010, Cheminova A/S, Cheminova, Inc., and United Phosphorus, Inc. and EPA signed a Memorandum of Agreement (MOA) to voluntarily cancel all uses of pesticide product registrations identified in Table 1 in Unit III. of this document. Specifically, the MOA will terminate the last methyl parathion products registered in the United States.

III. What Action is the Agency Taking?

This notice announces receipt by EPA of a request from registrants to cancel uses of methyl parathion product registrations. The affected products and the registrants making the requests are identified in Tables 1 and 2 of this unit.

Unless a request is withdrawn by the registrant or if the Agency determines that there are substantive comments that warrant further review of this request, EPA intends to issue an order canceling the affected registrations.

TABLE 1.—METHYL PARATHION PRODUCT REGISTRATIONS WITH PENDING REQUESTS FOR CANCELLATION

Registration Number	Product Name	Company
4787–33	Cheminova Methyl Parathion Technical	Cheminova A/S
67760–43	Cheminova Methyl Parathion 4 EC	Cheminova, Inc.
70506–193	PENNCAP-M Microencapsulated Insecticide	United Phosphorus, Inc.

Table 2 of this unit includes the names and addresses of record for the registrants of the products listed in Table 1 of this unit, in sequence by EPA company number. This number corresponds to the first part of the EPA registration numbers of the products listed in Table 1.

TABLE 2.—REGISTRANTS REQUESTING VOLUNTARY CANCELLATION

EPA Company Number	Company Name and Address
4787	Cheminova A/S 1600 Wilson Boulevard, Suite 700 Arlington, VA 22209
67760	Cheminova, Inc. 1600 Wilson Boulevard, Suite 700 Arlington, VA 22209
70506	United Phosphorus 630 Freedom Business Center, Suite 402 King of Prussia, PA 19406

IV. What is the Agency's Authority for Taking this Action?

Section 6(f)(1) of FIFRA provides that a registrant of a pesticide product may at any time request that any of its pesticide registrations be canceled or amended to terminate one or more uses. FIFRA further provides that, before acting on the request, EPA must publish a notice of receipt of any such request in the **Federal Register**.

Section 6(f)(1)(B) of FIFRA requires that before acting on a request for voluntary cancellation, EPA must provide a 30–day public comment period on the request for voluntary cancellation or use termination. In addition, section 6(f)(1)(C) of FIFRA requires that EPA provide a 180–day comment period on a request for voluntary cancellation or termination of any minor agricultural use before granting the request, unless:

1. The registrants request a waiver of the comment period, or

2. The Administrator determines that continued use of the pesticide would pose an unreasonable adverse effect on the environment.

The methyl parathion registrants have requested that EPA waive the 180–day comment period. Accordingly, EPA will provide a 30–day comment period on the proposed requests.

V. Procedures for Withdrawal of Requests

Registrants who choose to withdraw a request for product cancellation or use deletion should submit the withdrawal in writing to the person listed under **FOR FURTHER INFORMATION CONTACT**. If the products have been subject to a previous cancellation action, the effective date of cancellation and all other provisions of any earlier cancellation action are controlling.

VI. Provisions for Disposition of Existing Stocks

Existing stocks are those stocks of registered pesticide products that are currently in the United States and that were packaged, labeled, and released for shipment prior to the effective date of the action. If the requests for voluntary cancellation are granted, the Agency intends to publish the cancellation order in the **Federal Register**.

In any order issued in response to this request for cancellation of product registrations, EPA proposes to include the following provisions for the treatment of any existing stocks of the products listed in Table 1.

As specified in the Memorandum of Agreement, all use, sales and distributions of existing stocks of manufacturing-use products will be prohibited as of December 31, 2012. All sales and distributions of end-use products shall be prohibited as of August 31, 2013. Thereafter, registrants will be prohibited from selling or distributing the products identified in Table 1, except for export consistent with section 17 of FIFRA or for proper disposal. Additionally, all use of existing stocks of the end-use products shall be prohibited as of December 31, 2013.

List of Subjects

Environmental protection, Pesticides and pests.

Dated: April 16, 2010.

Richard P. Keigwin, Jr.,

Director, Pesticide Re-evaluation Division, Office of Pesticide Programs.

[FR Doc. 2010–9627 Filed 4–27–10; 8:45 am]

BILLING CODE 6560–50–S

ENVIRONMENTAL PROTECTION AGENCY

[EPA–HQ–OPP–2009–0760;FRL–8822–1]

Clofencet; Notice of Receipt of Request to Voluntarily Cancel Certain Pesticide Registrations

AGENCY: Environmental Protection Agency (EPA).

ACTION: Notice.

SUMMARY: In accordance with section 6(f)(1) of the Federal Insecticide, Fungicide, and Rodenticide Act (FIFRA), as amended, EPA is issuing a notice of receipt of a request by the registrant to voluntarily cancel their registrations of certain products containing the pesticide clofencet. The request would delete clofencet use as a plant growth regulator registered for use in the production of hybrid wheat seed. The request would terminate the last clofencet products registered for use in the United States. EPA intends to grant this request at the close of the comment period for this announcement unless the Agency receives substantive comments within the comment period that would merit its further review of the request, or unless the registrant withdraws its request. If this request is granted, any sale, distribution, or use of products listed in this notice will be permitted after the registrations have been cancelled only if such sale, distribution, or use is consistent with the terms as described in the final order.

DATES: Comments must be received on or before May 28, 2010.

ADDRESSES: Submit your comments, identified by docket identification (ID) number EPA–HQ–OPP–2009–0760, by one of the following methods:

- *Federal eRulemaking Portal*: *http://www.regulations.gov*. Follow the on-line instructions for submitting comments.

• *Mail*: Office of Pesticide Programs (OPP) Regulatory Public Docket (7502P), Environmental Protection Agency, 1200 Pennsylvania Ave., NW., Washington, DC 20460–0001.

• *Delivery*: OPP Regulatory Public Docket (7502P), Environmental Protection Agency, Rm. S–4400, One Potomac Yard (South Bldg.), 2777 S. Crystal Dr., Arlington, VA. Deliveries are only accepted during the Docket Facility's normal hours of operation (8:30 a.m. to 4 p.m., Monday through Friday, excluding legal holidays). Special arrangements should be made for deliveries of boxed information. The Docket Facility telephone number is (703) 305–5805.

Instructions: Direct your comments to docket ID number EPA–HQ–OPP–2009–0760. EPA's policy is that all comments received will be included in the docket without change and may be made available on-line at *http://www.regulations.gov*, including any personal information provided, unless the comment includes information claimed to be Confidential Business Information (CBI) or other information whose disclosure is restricted by statute. Do not submit information that you consider to be CBI or otherwise protected through regulations.gov or e-mail. The regulations.gov website is an "anonymous access" system, which means EPA will not know your identity or contact information unless you provide it in the body of your comment. If you send an e-mail comment directly to EPA without going through regulations.gov, your e-mail address will be automatically captured and included as part of the comment that is placed in the docket and made available on the Internet. If you submit an electronic comment, EPA recommends that you include your name and other contact information in the body of your comment and with any disk or CD-ROM you submit. If EPA cannot read your comment due to technical difficulties and cannot contact you for clarification, EPA may not be able to consider your comment. Electronic files should avoid the use of special characters, any form of encryption, and be free of any defects or viruses.

All documents in the docket are listed in the docket index available at *http://www.regulations.gov*. Although, listed in the index, some information is not publicly available, e.g., CBI or other information whose disclosure is restricted by statute. Certain other material, such as copyrighted material, is not placed on the Internet and will be publicly available only in hard copy form. Publicly available docket materials are available either in the electronic docket at *http://www.regulations.gov*, or, if only available in hard copy, at the OPP Regulatory Public Docket in Rm. S–4400, One Potomac Yard (South Bldg.), 2777 S. Crystal Dr., Arlington, VA. The hours of operation of this Docket Facility are from 8:30 a.m. to 4 p.m., Monday through Friday, excluding legal holidays. The Docket Facility telephone number is (703) 305–5805.

FOR FURTHER INFORMATION CONTACT: Wilhelmena Livingston, Pesticide Re-evaluation Division (7508P), Office of Pesticide Programs, Environmental Protection Agency, 1200 Pennsylvania Ave., NW., Washington, DC 20460–0001; telephone number: (703) 308–8025; fax number: (703) 308–8005; e-mail address: *livingston.wilhelmena@epa.gov*.

SUPPLEMENTARY INFORMATION:

I. General Information

A. Does this Action Apply to Me?

This action is directed to the public in general, and may be of interest to a wide range of stakeholders including environmental, human health, and agricultural advocates; the chemical industry; pesticide users; and members of the public interested in the sale, distribution, or use of pesticides. Since others also, may be interested, the Agency has not attempted to describe all the specific entities that may be affected by this action. If you have any questions regarding the applicability of this action to a particular entity, consult the person listed under **FOR FURTHER INFORMATION CONTACT**.

B. What Should I Consider as I Prepare My Comments for EPA?

1. *Submitting CBI.* Do not submit this information to EPA through regulations.gov or e-mail. Clearly mark the part or all of the information that you claim to be CBI. For CBI information in a disk or CD-ROM that you mail to EPA, mark the outside of the disk or CD-ROM as CBI and then identify electronically within the disk or CD-ROM the specific information that is claimed as CBI. In addition to one complete version of the comment that includes information claimed as CBI, a copy of the comment that does not contain the information claimed as CBI must be submitted for inclusion in the public docket. Information so marked will not be disclosed except in accordance with procedures set forth in 40 CFR part 2.

2. *Tips for preparing your comments.* When submitting comments, remember to:

i. Identify the document by docket ID number and other identifying information (subject heading, **Federal Register** date and page number).

ii. Follow directions. The Agency may ask you to respond to specific questions or organize comments by referencing a Code of Federal Regulations (CFR) part or section number.

iii. Explain why you agree or disagree; suggest alternatives and substitute language for your requested changes.

iv. Describe any assumptions and provide any technical information and/or data that you used.

v. If you estimate potential costs or burdens, explain how you arrived at your estimate in sufficient detail to allow for it to be reproduced.

vi. Provide specific examples to illustrate your concerns and suggest alternatives.

vii. Explain your views as clearly as possible, avoiding the use of profanity or personal threats.

viii. Make sure to submit your comments by the comment period deadline identified.

II. Background on the Receipt of Requests to Cancel

This notice announces receipt by EPA of a request from the registrant, Monsanto Company, to cancel certain clofencet product registrations. Clofencet is a plant growth regulator for use in the production of hybrid wheat seed. Clofencet is applied to female wheat plants during specific growth phases in order to suppress pollen development, thereby, forcing fertilization to occur from male plants located adjacent to the treated plants. In a letter dated February 5, 2010, Monsanto Company requested EPA to cancel the pesticide product registrations identified in Table 1. Specifically, Monsanto Company, the sole registrant of this active ingredient, no longer wishes to support the registration of this active ingredient or support it in the Registration Review process. The action on the registrant's request will terminate the last clofencet products registered in the United States.

III. What Action is the Agency Taking?

This notice announces receipt by EPA of a request from a registrant to cancel certain uses of clofencet product registrations. The affected products and the registrant making the requests are identified in Tables 1 and 2 of this unit.

Unless a request is withdrawn by the registrant or if the Agency determines that there are substantive comments that warrant further review of this request, EPA intends to issue an order canceling the affected registrations.

TABLE 1.—CLOFENCET PRODUCT REGISTRATIONS WITH PENDING REQUESTS FOR CANCELLATION

Registration Number	Product Name	Company
524–479	Genesis Hybridizing Agent	Monsanto Company
524-481	Mon 21200 Technical Registration	Monsanto Company
524-482	Mon 21233 Manufacturing Use Product	Monsanto Company

Table 2 of this unit includes the name and address of record for the registrant of the products listed in Table 1 of this unit. This number corresponds to the first part of the EPA registration numbers of the products listed above.

TABLE 2.—REGISTRANTS REQUESTING VOLUNTARY CANCELLATION

EPA Company Number	Company Name and Address
524	Monsanto Company 1300 I Street N.W. Suite 450 East East Washington, DC 20005

IV. What is the Agency's Authority for Taking this Action?

Section 6(f)(1) of FIFRA provides that a registrant of a pesticide product may at any time request that any of its pesticide registrations be canceled or amended to terminate one or more uses. FIFRA further provides that, before acting on the request, EPA must publish a notice of receipt of any such request in the **Federal Register**. Section 6(f)(1)(B) of FIFRA requires that before acting on a request for voluntary cancellation, EPA must provide a 30–day public comment period on the request for voluntary cancellation or use termination. In addition, section 6(f)(1)(C) of FIFRA requires that EPA provide a 180–day comment period on a request for voluntary cancellation or termination of any minor agricultural use before granting the request, unless:

1. The registrants request a waiver of the comment period, or

2. The Administrator determines that continued use of the pesticide would pose an unreasonable adverse effect on the environment.

The clofencet registrant has requested that EPA waive the 180–day comment period. Accordingly, EPA will provide a 30–day comment period on the proposed requests.

V. Procedures for Withdrawal of Requests

Registrants who choose to withdraw a request for product cancellation or use deletion should submit the withdrawal in writing to the person listed under **FOR FURTHER INFORMATION CONTACT**. If the products(s) have been subject to a previous cancellation action, the effective date of cancellation and all other provisions of any earlier cancellation action are controlling.

VI. Provisions for Disposition of Existing Stocks

Existing stocks are those stocks of registered pesticide products that are currently in the United States and that were packaged, labeled, and released for shipment prior to the effective date of the action. If the request for voluntary cancellation is granted, the Agency intends to publish the cancellation order in the **Federal Register**.

In any order issued in response to this request for cancellation of product registrations, EPA proposes to include the following provisions for the treatment of any existing stocks of the products listed in Table 1.

For voluntary product cancellations, registrants will be permitted to sell and distribute existing stocks of voluntarily canceled products for 1 year after the effective date of the cancellation, which will be the date of publication of the cancellation order in the **Federal Register.** Thereafter, registrants will be prohibited from selling or distributing the products identified in Table 1, except for export consistent with section 17 of FIFRA or for proper disposal.

Persons other than the registrant may sell, distribute, or use existing stocks of canceled products until supplies are exhausted, provided that such sale, distribution, or use is consistent with the terms of the previously approved labeling on, or that accompanied, the *canceled products.*

List of Subjects

Environmental protection, Pesticides and pests.

Dated: April 16, 2010.

Richard P. Keigwin, Jr.,

Director, Pesticide Re-evaluation Division, Office of Pesticide Programs.

[FR Doc. 2010–9460 Filed 4–27–10; 8:45 a.m.]

BILLING CODE 6560–50–S

ENVIRONMENTAL PROTECTION AGENCY

[EPA–HQ–OPP–2010-0194; FRL–8821–2]

Avaya Government Solutions; Transfer of Data

AGENCY: Environmental Protection Agency (EPA).

ACTION: Notice.

SUMMARY: This notice announces that pesticide related information submitted to EPA's Office of Pesticide Programs (OPP) pursuant to the Federal Insecticide, Fungicide, and Rodenticide Act (FIFRA) and the Federal Food, Drug, and Cosmetic Act (FFDCA), including information that may have been claimed as Confidential Business Information (CBI) by the submitter, will be transferred to Avaya Government Solutions in accordance with 40 CFR 2.307(h)(3) and 2.308(i)(2). Avaya Government Solutions has been awarded multiple contracts to perform work for OPP, and access to this information will enable Avaya Government Solutions to fulfill the obligations of the contract.

DATES: Avaya Government Solutions will be given access to this information on or before May 3, 2010.

FOR FURTHER INFORMATION CONTACT: Felicia Croom, Information Technology and Resources Management Division (7502P), Office of Pesticide Programs, Environmental Protection Agency, 1200 Pennsylvania Ave., NW., Washington, DC 20460–0001; telephone number: (703) 305–0786; e-mail address: *croom.felicia@epa.gov*.

SUPPLEMENTARY INFORMATION:

I. General Information

A. Does this Action Apply to Me?

This action applies to the public in general. As such, the Agency has not attempted to describe all the specific entities that may be affected by this action. If you have any questions regarding the applicability of this action to a particular entity, consult the person listed under **FOR FURTHER INFORMATION CONTACT**.

B. How Can I Get Copies of this Document and Other Related Information?

EPA has established a docket for this action under docket identification (ID) number EPA–HQ–OPP–2010–0194. Publicly available docket materials are available either in the electronic docket at *http://www.regulations.gov*, or, if only available in hard copy, at the Office of Pesticide Programs (OPP) Regulatory Public Docket in Rm. S–4400, One Potomac Yard (South Bldg.), 2777 S. Crystal Dr., Arlington, VA. The hours of operation of this Docket Facility are from 8:30 a.m. to 4 p.m., Monday through Friday, excluding legal holidays. The Docket Facility telephone number is (703) 305–5805.

II. Contractor Requirements

Under these contract numbers, the contractor will perform the following:

Under Contract No. EP10H001162, The contractor shall conduct information gathering session for the purpose of building the Incidents Data System. The contractor will collect and document requirements for an integrated data system and centralized incident data repository. The Contractor will be the primary resource for gathering information form a workgroup formed for the purpose of creating the Incidents Data system. After requirements have been approved, the Contractor shall design and build the Incidents Data System following all EPA-approved application development methodology. The gathering and creation of the system entails exposure to sensitive data in order for the Contractor to understand the complexity of the data and workflow.

These contracts involve no subcontractors. The OPP has determined that the contracts described in this document involve work that is being conducted in connection with FIFRA, in that pesticide chemicals will be the subject of certain evaluations to be made under this contract. These evaluations may be used in subsequent regulatory decisions under FIFRA.

Some of this information may be entitled to confidential treatment. The information has been submitted to EPA under sections 3, 4, 6, and 7 of FIFRA and under sections 408 and 409 of FFDCA.

In accordance with the requirements of 40 CFR 2.307(h)(3), the contracts with Avaya Government Solutions, prohibits use of the information for any purpose not specified in these contracts; prohibits disclosure of the information to a third party without prior written approval from the Agency; and requires that each official and employee of the contractor sign an agreement to protect the information from unauthorized release and to handle it in accordance with the *FIFRA Information Security Manual*. In addition, Avaya Government Solutions is required to submit for EPA approval a security plan under which any CBI will be secured and protected against unauthorized release or compromise.

No information will be provided to Avaya Government Solutions until the requirements in this document have been fully satisfied. Records of information provided to Avaya Government Solutions will be maintained by EPA Project Officers for these contracts. All information supplied to Avaya Government Solutions by EPA for use in connection with these contracts will be returned to EPA when Avaya Government Solutions has completed its work.

List of Subjects

Environmental protection, Business and industry, Government contracts, Government property, Security measures.

Dated: April 12, 2010.

Chandler Sirmon,

Acting Director, Office of Pesticide Programs.

[FR Doc. 2010–9619 Filed 4–27–10; 8:45 am]

BILLING CODE 6560–50–S

ENVIRONMENTAL PROTECTION AGENCY

[EPA–HQ–OPP–2010–0194; FRL–8821–9]

Versar, Inc. and Syracuse Research Corporation; Transfer of Data

AGENCY: Environmental Protection Agency (EPA).

ACTION: Notice.

SUMMARY: This notice announces that pesticide related information submitted to EPA's Office of Pesticide Programs (OPP) pursuant to the Federal Insecticide, Fungicide, and Rodenticide Act (FIFRA) and the Federal Food, Drug, and Cosmetic Act (FFDCA), including information that may have been claimed as Confidential Business Information (CBI) by the submitter, will be transferred to Versar, Inc. and its subcontractor, Syracuse Research Corporation, in accordance with 40 CFR 2.307(h)(3) and 2.308(i)(2). Versar, Inc. and its subcontractor, Syracuse Research Corporation, have been awarded a contract to perform work for OPP, and access to this information will enable Versar, Inc. and its subcontractor, Syracuse Research Corporation, to fulfill the obligations of the contract.

DATES: Versar, Inc. and its subcontractor, Syracuse Research Corporation, will be given access to this information on or before May 3, 2010.

FOR FURTHER INFORMATION CONTACT: Felicia Croom, Information Technology and Resources Management Division (7502P), Office of Pesticide Programs, Environmental Protection Agency, 1200 Pennsylvania Ave., NW., Washington, DC 20460–0001; telephone number: (703) 305–0786; e-mail address: *croom.felicia@epa.gov*.

SUPPLEMENTARY INFORMATION:

I. General Information

A. Does this Action Apply to Me?

This action applies to the public in general. As such, the Agency has not attempted to describe all the specific entities that may be affected by this action. If you have any questions regarding the applicability of this action to a particular entity, consult the person listed under **FOR FURTHER INFORMATION CONTACT**.

B. How Can I Get Copies of this Document and Other Related Information?

EPA has established a docket for this action under docket identification (ID) number EPA–HQ–OPP–2010–0194. Publicly available docket materials are available either in the electronic docket at *http://www.regulations.gov*, or, if only available in hard copy, at the Office of Pesticide Programs (OPP) Regulatory Public Docket in Rm. S–4400, One Potomac Yard (South Bldg.), 2777 S. Crystal Dr., Arlington, VA. The hours of operation of this Docket Facility are from 8:30 a.m. to 4 p.m., Monday through Friday, excluding legal holidays. The Docket Facility telephone number is (703) 305–5805.

II. Contractor Requirements

Under Contract No. EP–W–10–004, Versar, Inc. and its subcontractor, Syracuse Research Corporation, will conduct a comprehensive examination of all product chemistry data submitted to the Health Effects Division of the Office of Pesticides Programs in support of registration. The data assessment report will include the review and discussion of each chemical's identity, how it is manufactured, how it may be detected or measured, and a summary of data regarding its characteristic physical/chemical properties as specified by published guidelines.

The discussions mentioned in this unit are considered "Confidential Business Information." Thus, the

discussion of the specific procedures, equipment, and conditions required for the commercial manufacture of the pesticide chemical shall not be incorporated into the product chemistry portion of the Registration Eligibility Decision (RED) document; however, this information will be summarized in referenced memoranda, in appendices labeled "Confidential." The data mentioned in this unit will be used to perform tasks 1–4 of the Performance Work Statement.

The OPP has determined that access by Versar, Inc. and its subcontractor, Syracuse Research Corporation, to information on all pesticide chemicals is necessary for the performance of this contract.

Some of this information may be entitled to confidential treatment. The information has been submitted to EPA under sections 3, 4, 6, and 7 of FIFRA and under sections 408 and 409 of FFDCA.

In accordance with the requirements of 40 CFR 2.307(h)(2), the contract with Versar, Inc. and its subcontractor, Syracuse Research Corporation, prohibits use of the information for any purpose not specified in the contract; prohibits disclosure of the information to a third party without prior written approval from the Agency; and requires that each official and employee of the contractor sign an agreement to protect the information from unauthorized release and to handle it in accordance with the *FIFRA Information Security Manual*. In addition, Versar, Inc. and its subcontractor, Syracuse Research Corporation, are required to submit, for EPA approval, a security plan under which any CBI will be secured and protected against unauthorized release or compromise. No information will be provided to Versar, Inc. and its subcontractor, Syracuse Research Corporation, until the requirements in this document have been fully satisfied. Records of information provided to Versar, Inc. and its subcontractor, Syracuse Research Corporation, will be maintained by EPA's Project Officers for this contract. All information supplied to Versar, Inc. and its subcontractor, Syracuse Research Corporation, by EPA for use in connection with this contract will be returned to EPA when Versar, Inc. and its subcontractor, Syracuse Research Corporation, have completed their work.

List of Subjects

Environmental protection, Business and industry, Government contracts, Government property, Security measures.

Dated: April 13, 2010.

Chandler Sirmon,

Acting Director, Office of Pesticide Programs.

[FR Doc. 2010–9340 Filed 4–27–10; 8:45 am]

BILLING CODE 6560–50–S

FEDERAL MARITIME COMMISSION

Notice of Agreements Filed

The Commission hereby gives notice of the filing of the following agreements under the Shipping Act of 1984. Interested parties may submit comments on the agreements to the Secretary, Federal Maritime Commission, Washington, DC 20573, within ten days of the date this notice appears in the **Federal Register**. Copies of the agreements are available through the Commission's Web site (*http://www.fmc.gov*) or by contacting the Office of Agreements at (202)-523–5793 or *tradeanalysis@fmc.gov*.

Agreement No.: 011545–002.

Title: Agreement Between CSAV and Mitsui.

Parties: Compania Sud Americana de Vapores, S.A. (CSAV) and Mitsui O.S.K. Lines, Ltd.

Filing Party: Walter H. Lion, Esq.; McLaughlin & Stern, LLP; 260 Madison Avenue; New York, NY 10016.

Synopsis: The amendment deletes the pricing and pooling authorities and makes conforming technical changes.

Agreement No.: 012092–001.

Title: MOL/"K" Line Space Charter and Sailing Agreement.

Parties: Kawasaki Kisen Kaisha, Ltd. and Mitsui O.S.K. Lines, Ltd.

Filing Parties: John P. Meade, Esq.; Vice President-Law; "K" Line America, Inc.; 6009 Bethlehem Road; Preston, MD, 21655.

Synopsis: The amendment expands the geographic scope to include South East Asia ports, West Coast Canadian ports and U.S. Atlantic Coast ports. It also modifies the number of vessels and TEU capacities that may be deployed under the agreement.

Agreement No.: 012095.

Title: Hybur Ltd./Seafreight Space Charter Agreement.

Parties: Hybur Ltd. and Seafreight Line, Ltd.

Filing Parties: Alfred McNab; General Manager and Secretary; Hyde Shipping Corporation.; 10025 N.W. 116th Way, Suite 2; Medley, FL 33178.

Synopsis: The agreement authorizes Seafreight to charter space from Hybur Ltd. between the ports of Port Everglades, FL and George Town, Grand Cayman.

By Order of the Federal Maritime Commission.

Dated: April 23, 2010.

Karen V. Gregory,

Secretary.

[FR Doc. 2010–9856 Filed 4–27–10; 8:45 am]

BILLING CODE 6730–01–P

FEDERAL MARITIME COMMISSION

Ocean Transportation Intermediary License Applicants

Notice is hereby given that the following applicants have filed with the Federal Maritime Commission an application for a license as a Non-Vessel-Operating Common Carrier (NVO) and/or Ocean Freight Forwarder (OFF)—Ocean Transportation Intermediary (OTI) pursuant to section 19 of the Shipping Act of 1984 as amended (46 U.S.C. Chapter 409 and 46 CFR 515). Notice is also hereby given of the filing of applications to amend an existing OTI license or the Qualifying Individual (QI) for a license.

Interested persons may contact the Office of Transportation Intermediaries, Federal Maritime Commission, Washington, DC 20573.

America's Trans-Logistics Inc. (OFF & NVO), 3301 NW 87th Avenue, Doral, FL 33172. *Officers:* Jose R. Castillo Ospina, Secretary/Treasurer, (Qualifying Individual). Maria C. Ucros, President. *Application Type:* New OFF & NVO License.

Dakini International Logistics Inc. (OFF & NVO), 36707 212th Way SE., Auburn, WA 98092. *Officers:* Terri L. Danz, Vice President, (Qualifying Individual). Carylon E. Simpson-Cooper, President. *Application Type:* New OFF & NVO License.

Damco USA Inc. dba Damco Sea and Air dba Damco dba Damco Maritime dba DSL Star Express dba Maersk Logistics (OFF & NVO), 7 Giralda Farms, Madison, NJ 07940. *Officers:* Kurt C. Pruitt, Senior Vice President/COO, (Qualifying Individual). Jeremy Haycock, President/Director. *Application Type:* QI Change.

Dice Worldwide Logistics, LLC dba Dice Worldwide Logistics (OFF & NVO), 8140 N.W. 29th Street, Miami, FL 33122. *Officers:* Patrick R. Moebel, CEO, (Qualifying Individual). Bernard S. Tcharchefdjian, President. *Application Type:* New OFF & NVO License.

Freight Master Overseas, Inc. (OFF), 570 West 20th Street, Hialeah, FL 33010. *Officers:* Premchan Rampersad, President/Sales Director/Treasurer, (Qualifying Individual). Shaffina Rampersad, Vice President/Secretary. *Application Type:* Add NVO Service.

International Frontier Forwarders, Inc. (OFF & NVO), 17101 Kuykendahl Road, Suite 255, Houston, TX 77068. Officer: Jose G. Diaz, President/Secretary/Treasurer, (Qualifying Individual). *Application Type:* New OFF & NVO License.

JSK Logistics LLC dba JSK Lines (OFF & NVO), 4 Wernik Place, Metuchen, NJ 08840. *Officers:* Norbert G. Mendes, Chief Operating Officer, (Qualifying Individual). Jigar Choksi, Member. *Application Type:* New OFF & NVO License.

Miami Envios Express Inc. (NVO), 7468 S.W. 117th Avenue, Miami, FL 33183. *Officers:* Mauricio Perez, President, (Qualifying Individual). Freddy Acevedo, Secretary. *Application Type:* Add OFF Service.

Midas International Investments LLC dba Midas Express Shipping And Freight (OFF & NVO), 14300 Cherry Lane Ct., Suite 103, Laurel, MD 20707. *Officers:* Adepero A. Oreagba, Vice President/Chief Operating Officer, (Qualifying Individual). Nurudeen A. Oreagba, President. *Application Type:* QI Change.

RDD Freight International, (LA) Inc. (OFF), 8140 N.W. 29th Street, Miami, FL 33122. *Officers:* Patrick R. Moebel, CEO, (Qualifying Individual). Bernard S. Tcharchefdjian, President. *Application Type:* New OFF License.

Dated: April 23, 2010.

Karen V. Gregory,

Secretary.

[FR Doc. 2010–9854 Filed 4–27–10; 8:45 am]

BILLING CODE 6730–01–P

DEPARTMENT OF HEALTH AND HUMAN SERVICES

Decision To Evaluate a Petition To Designate a Class of Employees From the Sandia National Laboratory in Albuquerque, NM, To Be Included in the Special Exposure Cohort

AGENCY: National Institute for Occupational Safety and Health (NIOSH), Department of Health and Human Services (HHS).

ACTION: Notice.

SUMMARY: HHS gives notice as required by 42 CFR 83.12(e) of a decision to evaluate a petition to designate a class of employees from the Sandia National Laboratory in Albuquerque, New Mexico, to be included in the Special Exposure Cohort under the Energy Employees Occupational Illness Compensation Program Act of 2000. The initial proposed definition for the class being evaluated, subject to revision as warranted by the evaluation, is as follows:

Facility: Sandia National Laboratory.

Location: Albuquerque, New Mexico.

Job Titles and/or Job Duties: All employees who worked within the Reactor Division.

Period of Employment: January 1, 1957 through December 31, 1962.

FOR FURTHER INFORMATION CONTACT: Stuart L. Hinnefeld, Interim Director, Division of Compensation Analysis and Support, National Institute for Occupational Safety and Health (NIOSH), 4676 Columbia Parkway, MS C–46, Cincinnati, OH 45226, Telephone 877–222–7570. Information requests can also be submitted by e-mail to *DCAS@CDC.GOV.*

John Howard,

Director, National Institute for Occupational Safety and Health.

[FR Doc. 2010–9862 Filed 4–27–10; 8:45 am]

BILLING CODE 4163–19–P

DEPARTMENT OF HEALTH AND HUMAN SERVICES

Designation of a Class of Employees for Addition to the Special Exposure Cohort

AGENCY: National Institute for Occupational Safety and Health (NIOSH), Department of Health and Human Services (HHS).

ACTION: Notice.

SUMMARY: HHS gives notice of a decision to designate a class of employees of Area IV of the Santa Susana Field Laboratory as an addition to the Special Exposure Cohort (SEC) under the Energy Employees Occupational Illness Compensation Program Act of 2000. On April 5, 2010, the Secretary of HHS designated the following class of employees as an addition to the SEC:

All employees of the Department of Energy, its predecessor agencies, and their contractors and subcontractors who worked in any area of Area IV of the Santa Susana Field Laboratory from January 1, 1959 through December 31, 1964, for a number of work days aggregating at least 250 work days, occurring either solely under this employment or in combination with work days within the parameters established for one or more other classes of employees included in the Special Exposure Cohort.

This designation will become effective on May 5, 2010, unless Congress provides otherwise prior to the effective date. After this effective date, HHS will publish a notice in the **Federal Register** reporting the addition of this class to the SEC or the result of any provision by Congress regarding the decision by HHS to add the class to the SEC.

FOR FURTHER INFORMATION CONTACT: Stuart L. Hinnefeld, Interim Director, Division of Compensation Analysis and Support, National Institute for Occupational Safety and Health (NIOSH), 4676 Columbia Parkway, MS C–46, Cincinnati, OH 45226, Telephone 877–222–7570. Information requests can also be submitted by e-mail to *DCAS@CDC.GOV.*

John Howard,

Director, National Institute for Occupational Safety and Health.

[FR Doc. 2010–9853 Filed 4–27–10; 8:45 am]

BILLING CODE 4163–19–P

DEPARTMENT OF HEALTH AND HUMAN SERVICES

Designation of a Class of Employees for Addition to the Special Exposure Cohort

AGENCY: National Institute for Occupational Safety and Health (NIOSH), Department of Health and Human Services (HHS).

ACTION: Notice.

SUMMARY: HHS gives notice of a decision to designate a class of employees at the Lawrence Berkeley National Laboratory in Berkeley, California, as an addition to the Special Exposure Cohort (SEC) under the Energy Employees Occupational Illness Compensation Program Act of 2000. On April 5, 2010, the Secretary of HHS designated the following class of employees as an addition to the SEC:

All employees of the Department of Energy, its predecessor agencies, and their contractors and subcontractors who worked at the Lawrence Berkeley National Laboratory in Berkeley, California, from August 13, 1942 through December 31, 1961, for a number of work days aggregating at least 250 work days, occurring either solely under this employment or in combination with work days within the parameters established for one or more other classes of employees included in the Special Exposure Cohort.

This designation will become effective on May 5, 2010, unless Congress provides otherwise prior to the effective date. After this effective date, HHS will publish a notice in the **Federal Register** reporting the addition of this class to the SEC or the result of any provision by Congress regarding the decision by HHS to add the class to the SEC.

FOR FURTHER INFORMATION CONTACT: Stuart L. Hinnefeld, Interim Director, Division of Compensation Analysis and Support, National Institute for

Occupational Safety and Health (NIOSH), 4676 Columbia Parkway, MS C–46, Cincinnati, OH 45226, Telephone 877–222–7570. Information requests can also be submitted by e-mail to *DCAS@CDC.GOV.*

John Howard,

Director, National Institute for Occupational Safety and Health.

[FR Doc. 2010–9855 Filed 4–27–10; 8:45 am]

BILLING CODE 4163–19–P

DEPARTMENT OF HEALTH AND HUMAN SERVICES

Designation of a Class of Employees for Addition to the Special Exposure Cohort

AGENCY: National Institute for Occupational Safety and Health (NIOSH), Department of Health and Human Services (HHS).

ACTION: Notice.

SUMMARY: HHS gives notice of a decision to designate a class of employees at the Lawrence Livermore National Laboratory in Livermore, California, as an addition to the Special Exposure Cohort (SEC) under the Energy Employees Occupational Illness Compensation Program Act of 2000. On April 5, 2010, the Secretary of HHS designated the following class of employees as an addition to the SEC:

All employees of the Department of Energy, its predecessor agencies, and their contractors and subcontractors who worked at the Lawrence Livermore National Laboratory in Livermore, California from January 1, 1950 through December 31, 1973, for a number of work days aggregating at least 250 work days, occurring either solely under this employment or in combination with work days within the parameters established for one or more other classes of employees in the Special Exposure Cohort.

This designation will become effective on May 5, 2010, unless Congress provides otherwise prior to the effective date. After this effective date, HHS will publish a notice in the **Federal Register** reporting the addition of this class to the SEC or the result of any provision by Congress regarding the decision by HHS to add the class to the SEC.

FOR FURTHER INFORMATION CONTACT: Stuart L. Hinnefeld, Interim Director, Division of Compensation Analysis and Support, National Institute for Occupational Safety and Health (NIOSH), 4676 Columbia Parkway, MS C–46, Cincinnati, OH 45226, Telephone 877–222–7570. Information requests can also be submitted by e-mail to *DCAS@CDC.GOV.*

John Howard,

Director, National Institute for Occupational Safety and Health.

[FR Doc. 2010–9857 Filed 4–27–10; 8:45 am]

BILLING CODE 4163–19–P

DEPARTMENT OF HEALTH AND HUMAN SERVICES

Designation of a Class of Employees for Addition to the Special Exposure Cohort

AGENCY: National Institute for Occupational Safety and Health (NIOSH), Department of Health and Human Services (HHS).

ACTION: Notice.

SUMMARY: HHS gives notice of a decision to designate a class of employees at the Nevada Test Site as an addition to the Special Exposure Cohort (SEC) under the Energy Employees Occupational Illness Compensation Program Act of 2000. On April 5, 2010, the Secretary of HHS designated the following class of employees as an addition to the SEC:

All employees of the Department of Energy, its predecessor agencies, and its contractors and subcontractors who worked at the Nevada Test Site, from January 1, 1963 through December 31, 1992, for a number of work days aggregating at least 250 work days, occurring either solely under this employment or in combination with work days within the parameters established for one or more other classes of employees in the SEC.

This designation will become effective on May 5, 2010, unless Congress provides otherwise prior to the effective date. After this effective date, HHS will publish a notice in the **Federal Register** reporting the addition of this class to the SEC or the result of any provision by Congress regarding the decision by HHS to add the class to the SEC.

FOR FURTHER INFORMATION CONTACT: Stuart L. Hinnefeld, Interim Director, Division of Compensation Analysis and Support, National Institute for Occupational Safety and Health (NIOSH), 4676 Columbia Parkway, MS C–46, Cincinnati, OH 45226, Telephone 877–222–7570. Information requests can also be submitted by e-mail to *DCAS@CDC.GOV.*

John Howard,

Director, National Institute for Occupational Safety and Health.

[FR Doc. 2010–9860 Filed 4–27–10; 8:45 am]

BILLING CODE 4163–19–P

DEPARTMENT OF HEALTH AND HUMAN SERVICES

Designation of a Class of Employees for Addition to the Special Exposure Cohort

AGENCY: National Institute for Occupational Safety and Health (NIOSH), Department of Health and Human Services (HHS).

ACTION: Notice.

SUMMARY: HHS gives notice of a decision to designate a class of employees at Westinghouse Electric Corp., Bloomfield, New Jersey, as an addition to the Special Exposure Cohort (SEC) under the Energy Employees Occupational Illness Compensation Program Act of 2000. On April 5, 2010, the Secretary of HHS designated the following class of employees as an addition to the SEC:

All Atomic Weapons Employer employees who worked at Westinghouse Electric Corp., Bloomfield, New Jersey, from August 13, 1942 through December 31, 1949, for a number of work days aggregating at least 250 work days, occurring either solely under this employment, or in combination with work days within the parameters established for one or more other classes of employees included in the Special Exposure Cohort.

This designation will become effective on May 5, 2010, unless Congress provides otherwise prior to the effective date. After this effective date, HHS will publish a notice in the **Federal Register** reporting the addition of this class to the SEC or the result of any provision by Congress regarding the decision by HHS to add the class to the SEC.

FOR FURTHER INFORMATION CONTACT: Stuart L. Hinnefeld, Interim Director, Division of Compensation Analysis and Support, National Institute for Occupational Safety and Health (NIOSH), 4676 Columbia Parkway, MS C–46, Cincinnati, OH 45226, Telephone 877–222–7570. Information requests can also be submitted by e-mail to *DCAS@CDC.GOV.*

John Howard,

Director, National Institute for Occupational Safety and Health.

[FR Doc. 2010–9861 Filed 4–27–10; 8:45 am]

BILLING CODE 4163–19–P

DEPARTMENT OF HEALTH AND HUMAN SERVICES

Food and Drug Administration

[Docket No. FDA–2010–F–0200]

Fonterra (USA) Inc.; Filing of Food Additive Petition

AGENCY: Food and Drug Administration, HHS.

ACTION: Notice.

SUMMARY: The Food and Drug Administration (FDA) is announcing that Fonterra (USA) Inc. has filed a petition proposing that the food additive regulations be amended to provide for the safe use of hydrogen peroxide in the manufacture of modified whey by the ultrafiltration method.

FOR FURTHER INFORMATION CONTACT: Celeste Johnston, Center for Food Safety and Applied Nutrition (HFS–265), Food and Drug Administration, 5100 Paint Branch Pkwy., College Park, MD 20740–3835, 301–436–1282.

SUPPLEMENTARY INFORMATION: Under the Federal Food, Drug, and Cosmetic Act (sec.409(b)(5) (21 U.S.C. 348(b)(5))), notice is given that a food additive petition (FAP 0A4781) has been filed by Fonterra (USA), Inc., c/o Burdock Group, 801 N. Orange Ave., Suite 710, Orlando FL, 32801. The petition proposes to amend the food additive regulations in part 173—*Secondary Direct Food Additives Permitted in Food for Human Consumption* (21 CFR part 173) to provide for the safe use of hydrogen peroxide in the manufacture of modified whey by the ultrafiltration method.

The agency has determined under 21 CFR 25.32(r) that this action is of a type that does not individually or cumulatively have a significant effect on the human environment. Therefore, neither an environmental assessment nor an environmental impact statement is required.

Dated: April 23, 2010.

Mitchell A. Cheeseman,

Acting Director, Office of Food Additive Safety, Center for Food Safety and Applied Nutrition.

[FR Doc. 2010–9823 Filed 4–27–10; 8:45 am]

BILLING CODE 4160–01–S

DEPARTMENT OF HEALTH AND HUMAN SERVICES

National Institutes of Health

Center for Scientific Review; Amended Notice of Meeting

Notice is hereby given of a change in the meeting of the Center for Scientific Review Special Emphasis Panel, May 27, 2010, 9:30 a.m. to May 27, 2010, 6 p.m., National Institutes of Health, 6701 Rockledge Drive, Bethesda, MD 20892 which was published in the **Federal Register** on April 16, 2010, 75 FR 19982–19983.

The meeting will be held June 9, 2010. The meeting time and location remain the same. The meeting is closed to the public.

Dated: April 22, 2010.

Jennifer Spaeth,

Director, Office of Federal Advisory Committee Policy.

[FR Doc. 2010–9844 Filed 4–27–10; 8:45 am]

BILLING CODE 4140–01–P

DEPARTMENT OF HEALTH AND HUMAN SERVICES

National Institutes of Health

National Institute on Aging; Notice of Closed Meetings

Pursuant to section 10(d) of the Federal Advisory Committee Act, as amended (5 U.S.C. App.), notice is hereby given of the following meetings.

The meetings will be closed to the public in accordance with the provisions set forth in sections 552b(c)(4) and 552b(c)(6), Title 5 U.S.C., as amended. The grant applications and the discussions could disclose confidential trade secrets or commercial property such as patentable material, and personal information concerning individuals associated with the grant applications, the disclosure of which would constitute a clearly unwarranted invasion of personal privacy.

Name of Committee: National Institute on Aging Special Emphasis Panel; Lead Drug Candidates.

Date: May 14, 2010.

Time: 12 p.m. to 4 p.m.

Agenda: To review and evaluate contract proposals.

Place: National Institute on Aging, Gateway Building, 7201 Wisconsin Avenue, Suite 2C212, Bethesda, MD 20892. (Telephone Conference Call)

Contact Person: Jeannette L. Johnson, PhD, Scientific Review Officer, National Institutes on Aging, National Institutes of Health, 7201 Wisconsin Avenue, Suite 2C212, Bethesda, MD 20892, 301–402–7705, *johnsonj9@nia.nih.gov.*

This notice is being published less than 15 days prior to the meeting due to the timing limitations imposed by the review and funding cycle.

Name of Committee: National Institute on Aging Special Emphasis Panel; Genetics of Osteoporosis.

Date: May 21, 2010.

Time: 1 p.m. to 4 p.m.

Agenda: To review and evaluate grant applications.

Place: National Institute on Aging, Gateway Building, 7201 Wisconsin Avenue, Suite 2C212, Bethesda, MD 20892. (Telephone Conference Call)

Contact Person: Rebecca J. Ferrell, PhD, Scientific Review Officer, National Institute on Aging, Gateway Building Rm. 2C212, 7201 Wisconsin Avenue, Bethesda, MD 20892, 301–402–7703, *ferrellrj@mail.nih.gov.*

Name of Committee: National Institute on Aging Special Emphasis Panel; Healthy Aging Pathways.

Date: June 18, 2010.

Time: 12 p.m. to 4 p.m.

Agenda: To review and evaluate grant applications.

Place: National Institute on Aging, Gateway Building, 7201 Wisconsin Avenue, Suite 2C212, Bethesda, MD 20892. (Telephone Conference Call)

Contact Person: Jeannette L. Johnson, PhD, Scientific Review Officer, National Institutes on Aging, National Institutes of Health, 7201 Wisconsin Avenue, Suite 2C212, Bethesda, MD 20892, 301–402–7705, *johnsonj9@nia.nih.gov.*

Name of Committee: National Institute on Aging Special Emphasis Panel; Dietary Restriction & Nonhuman Primate Aging.

Date: July 19, 2010.

Time: 1 p.m. to 4:30 p.m.

Agenda: To review and evaluate grant applications.

Place: National Institute on Aging, Gateway Building, 7201 Wisconsin Avenue, Suite 2C212, Bethesda, MD 20892. (Telephone Conference Call)

Contact Person: Rebecca J. Ferrell, PhD, Scientific Review Officer, National Institute on Aging, Gateway Building Rm. 2C212, 7201 Wisconsin Avenue, Bethesda, MD 20892, 301–402–7703, *ferrellrj@mail.nih.gov.*

(Catalogue of Federal Domestic Assistance Program Nos. 93.866, Aging Research, National Institutes of Health, HHS)

Dated: April 21, 2010.

Jennifer Spaeth,

Director, Office of Federal Advisory Committee Policy.

[FR Doc. 2010–9837 Filed 4–27–10; 8:45 am]

BILLING CODE 4140–01–P

DEPARTMENT OF HEALTH AND HUMAN SERVICES

National Institutes of Health

National Institute of Mental Health; Notice of Closed Meeting

Pursuant to section 10(d) of the Federal Advisory Committee Act, as

amended (5 U.S.C. App.), notice is hereby given of the following meeting.

The meeting will be closed to the public in accordance with the provisions set forth in sections 552b(c)(4) and 552b(c)(6), Title 5 U.S.C., as amended. The grant applications and the discussions could disclose confidential trade secrets or commercial property such as patentable materials, and personal information concerning individuals associated with the grant applications, the disclosure of which would constitute a clearly unwarranted invasion of personal privacy.

Name of Committee: National Institute of Mental Health Initial Review Group; Mental Health Services in Non-Specialty Settings.

Date: June 8–9, 2010.

Time: 8 a.m. to 5 p.m.

Agenda: To review and evaluate grant applications.

Place: Melrose Hotel, 2430 Pennsylvania Avenue, NW., Washington, DC 20037.

Contact Person: Aileen Schulte, PhD, Scientific Review Officer, Division of Extramural Activities, National Institute of Mental Health, NIH, Neuroscience Center, 6001 Executive Blvd., Room 6140, MSC 9608, Bethesda, MD 20892–9608, 301–443–1225, *aschulte@mail.nih.gov.*

Name of Committee: National Institute of Mental Health Initial Review Group; Interventions Committee for Adult Disorders.

Date: June 8–9, 2010.

Time: 8:30 a.m. to 5 p.m.

Agenda: To review and evaluate grant applications.

Place: Hyatt Regency Bethesda, One Bethesda Metro Center, 7400 Wisconsin Avenue, Bethesda, MD 20814.

Contact Person: David Sommers, PhD, Scientific Review Officer, Division of Extramural Activities, National Institute of Mental Health, NIH, Neuroscience Center, 6001 Executive Blvd., Room 6154, MSC 9606, Bethesda, MD 20892–9606, 301–443–7861, *dsommers@mail.nih.gov.*

Name of Committee: National Institute of Mental Health Initial Review Group; Mental Health Services in MH Specialty Settings.

Date: June 10, 2010.

Time: 8:30 a.m. to 5 p.m.

Agenda: To review and evaluate grant applications.

Place: Melrose Hotel, 2430 Pennsylvania Avenue, NW., Washington, DC 20037.

Contact Person: Marina Broitman, PhD, Scientific Review Officer, Division of Extramural Activities, National Institute of Mental Health, NIH, Neuroscience Center, 6001 Executive Blvd., Room 6153, MSC 9608, Bethesda, MD 20892–9608, 301–402–8152, *mbroitma@mail.nih.gov.*

Name of Committee: National Institute of Mental Health Initial Review Group; Interventions Committee for Disorders Involving Children and Their Families.

Date: June 10, 2010.

Time: 8:30 a.m. to 5 p.m.

Agenda: To review and evaluate grant applications.

Place: Hyatt Regency Bethesda, One Bethesda Metro Center, 7400 Wisconsin Avenue, Bethesda, MD 20814.

Contact Person: David Sommers, PhD, Scientific Review Officer, Division of Extramural Activities, National Institute of Mental Health, NIH, Neuroscience Center, 6001 Executive Blvd., Room 6154, MSC 9606, Bethesda, MD 20892–9606, 301–443–7861, *dsommers@mail.nih.gov.*

(Catalogue of Federal Domestic Assistance Program Nos. 93.242, Mental Health Research Grants; 93.281, Scientist Development Award, Scientist Development Award for Clinicians, and Research Scientist Award; 93.282, Mental Health National Research Service Awards for Research Training, National Institutes of Health, HHS)

Dated: April 22, 2010.

Jennifer Spaeth,

Director, Office of Federal Advisory Committee Policy.

[FR Doc. 2010–9840 Filed 4–27–10; 8:45 am]

BILLING CODE 4140–01–P

DEPARTMENT OF HEALTH AND HUMAN SERVICES

National Institutes of Health

Center for Scientific Review; Notice of Closed Meetings

Pursuant to section 10(d) of the Federal Advisory Committee Act, as amended (5 U.S.C. App.), notice is hereby given of the following meetings.

The meetings will be closed to the public in accordance with the provisions set forth in sections 552b(c)(4) and 552b(c)(6), Title 5 U.S.C., as amended. The grant applications and the discussions could disclose confidential trade secrets or commercial property such as patentable material, and personal information concerning individuals associated with the grant applications, the disclosure of which would constitute a clearly unwarranted invasion of personal privacy.

Name of Committee: Bioengineering Sciences & Technologies Integrated Review Group; Biomaterials and Biointerfaces Study Section.

Date: May 25–26, 2010.

Time: 8 a.m. to 5 p.m.

Agenda: To review and evaluate grant applications.

Place: Hilton Crystal City, 2399 Jefferson Davis Highway, Arlington, VA 22202.

Contact Person: Steven J Zullo, PhD, Scientific Review Officer, Center for Scientific Review, National Institutes of Health, 6701 Rockledge Drive, Room 5146, MSC 7849, Bethesda, MD 20892, 301–435–2810, *zullost@csr.nih.gov.*

Name of Committee: Center for Scientific Review Special Emphasis Panel; Member Conflict: Gastrointestinal Physiology and Pathophysiology.

Date: May 28, 2010.

Time: 12 p.m. to 2:30 p.m.

Agenda: To review and evaluate grant applications.

Place: National Institutes of Health, 6701 Rockledge Drive, Bethesda, MD 20892 (Telephone Conference Call).

Contact Person: Patricia Greenwel, PhD, Scientific Review Officer, Center for Scientific Review, National Institutes of Health, 6701 Rockledge Drive, Room 2178, MSC 7818, Bethesda, MD 20892, 301–435–1169, *greenwep@csr.nih.gov.*

(Catalogue of Federal Domestic Assistance Program Nos. 93.306, Comparative Medicine; 93.333, Clinical Research, 93.306, 93.333, 93.337, 93.393–93.396, 93.837–93.844, 93.846–93.878, 93.892, 93.893, National Institutes of Health, HHS)

Dated: April 22, 2010.

Jennifer Spaeth,

Director, Office of Federal Advisory Committee Policy.

[FR Doc. 2010–9838 Filed 4–27–10; 8:45 am]

BILLING CODE 4140–01–P

DEPARTMENT OF HEALTH AND HUMAN SERVICES

Food and Drug Administration

[Docket No. FDA–2010–N–0001]

Food and Drug Administration/Xavier University Global Outsourcing Conference

AGENCY: Food and Drug Administration, HHS.

ACTION: Notice of public conference.

SUMMARY: The Food and Drug Administration (FDA), Cincinnati District, in co-sponsorship with Xavier University, is announcing a public conference entitled "FDA/Xavier University Global Outsourcing Conference." This 3-day public conference for the pharmaceutical industry includes presentations from key FDA officials, global regulators, and industry experts. The conference will focus on global compliance challenges associated with pharmaceutical outsourcing relationships and supply chain control, as well as expectations from global regulators. Pharmaceutical companies and contract organizations are invited to this conference to address the issues that reside on both sides. In addition to expert presentations, participants will be engaged through live polling and a small group discussion session on sharing best practices with each other.

Dates and Times: The public conference will be held on June 14 and 15, 2010, from 8 a.m. to 5 p.m. and June 16, 2010, from 8 a.m. to 1 p.m.

Location: The public conference will be held on the campus of Xavier

University, 3800 Victory Pkwy., Cincinnati, OH 45207, 513–745–3073 or 513–745–3396.

Contact Persons:

For information regarding this notice: Steven Eastham, Food and Drug Administration, 6751 Steger Dr., Cincinnati, OH 45237, 513–679–2700, ext. 123, e-mail: *steven.eastham@fda.hhs.gov*.

For information regarding the conference and registration: Marla Phillips, Xavier University, 3800 Victory Pkwy., Cincinnati, OH 45207, 513–745–3073, e-mail: *phillipsm4@xavier.edu*.

Registration: There is a registration fee. The conference registration fees cover the cost of the presentations, training materials, receptions, breakfasts, lunches, dinners, and dinner speakers for the 3 days of the conference. Early registration ends May 14, 2010. Standard registration ends June 13, 2010. There will be onsite registration. The cost of registration is as follows:

TABLE 1.—REGISTRATION FEES[1]

Attendees	Fees by May 14th	Fees by June 13th
Industry	$995	$1,200
Small Business (< 100 employees)	$800	$1,000
Academic/Government	$600	$700
Student	$200	$250
FDA Employee	Fee waived	Fee waived

[1] The fourth registration from the same company is free.

The following forms of payment will be accepted: American Express, Visa, Mastercard, and company checks.

To register online for the public conference, please visit the "Registration" link on the conference Web site at *http://www.XavierGOC.com*. (FDA has verified the Web site address, but is not responsible for subsequent changes to the Web site after this document publishes in the **Federal Register**.)

To register by mail, please send your name, title, firm name, address, telephone and fax numbers, e-mail, and payment information for the fee to Xavier University, Attn: Sue Bensman, 3800 Victory Pkwy., Cincinnati, OH 45207. An e-mail will be sent confirming your registration.

Attendees are responsible for their own accommodations. The conference headquarter hotel is the Downtown Cincinnati Hilton Netherlands Plaza, 35 West 5th Street, Cincinnati, OH 45202, 513–421–9100. To make reservations online, please visit the "Venue/Logistics" link at *http://www.XavierGOC.com*.

If you need special accommodations due to a disability, please contact Marla Phillips (see *Contact Persons*) at least 7 days in advance of the conference.

SUPPLEMENTARY INFORMATION: The public conference helps fulfill the Department of Health and Human Services and FDA's important mission to protect the public health. The conference will provide those engaged in FDA-regulated outsourcing with information on the following topics:

- FDA Center to present on initiatives from Congress and FDA, and resulting impact;
- Global regulator perspective on global compliance initiatives, challenges, and expectations;
- FDA Field perspective on the most common and significant deficiencies specific to outsourcing relationships;
- Global compliance of manufacturing in Asia;
- Pharmaceutical companies—how to manage varying global regulatory expectations while working with contractors in various states of compliance;
- Contract organizations—compliance strategy for managing global regulatory requirements while managing multiple client expectations;
- Contract Organization Selection Process;
- The Client Selection Process—the criteria a contract organization should use to consider saying no to a contract relationship;
- Regulatory challenges—Drug Master File Fitness;
- Due diligence audit—how to audit in 1 day;
- Quality Agreement Development throughout the product and process lifecycle;
- Supply Chain Transparency and Pedigree;
- How to Audit the Supply Chain;
- Rx-360 and International Pharmaceutical Excipients Council initiatives—impact to industry;
- Risk-based Performance Management best practices;
- International Conference on Harmonisation Triple Q's (Q8, Q9, and Q10)—how quality can drive down the cost of business, and how innovation can increase business opportunities;
- Rebuilding the Trust case studies; and
- Small group discussion on sharing best practices.

FDA has made education of the drug and device manufacturing community a high priority to help ensure the quality of FDA-regulated drugs and devices. The conference helps to achieve objectives set forth in section 406 of the Food and Drug Administration Modernization Act of 1997 (21 U.S.C. 393), which includes working closely with stakeholders and maximizing the availability and clarity of information to stakeholders and the public. The conference also is consistent with the Small Business Regulatory Enforcement Fairness Act of 1996 (Public Law 104–121) by providing outreach activities by Government agencies to small businesses.

Dated: April 22, 2010.

Leslie Kux,

Acting Assistant Commissioner for Policy.

[FR Doc. 2010–9795 Filed 4–27–10; 8:45 am]

BILLING CODE 4160–01–S

DEPARTMENT OF HEALTH AND HUMAN SERVICES

Centers for Disease Control and Prevention

Statement of Organization, Functions, and Delegations of Authority

Part C (Centers for Disease Control and Prevention) of the Statement of

Organization, Functions, and Delegations of Authority of the Department of Health and Human Services (45 FR 67772–76, dated October 14, 1980, and corrected at 45 FR 69296, October 20, 1980, as amended most recently at 75 FR 14608, dated March 26, 2010) is amended to reflect the reorganization of the Office of Enterprise Communication, Office of the Director, Centers for Disease Control and Prevention.

Section C–B, Organization and Functions, is hereby amended as follows:

Delete in its entirety the title and functional statements for the Office of *Enterprise Communication (CAU),* and insert the following: *Office of the Associate Director for Communication (CAU).* The mission of the Office of the Associate Director for Communication (OADC) is to support CDC's mission by leading customer-centered, science-based, and high-impact communication. In carrying out its mission, the OADC: (1) Serves as a key advisor on communication activities to CDC's Director and leadership; (2) conducts, oversees and promotes health communication science research and practices; (3) provides and manages communication services including broadcast, graphics, and photography; (4) facilitates open and transparent employee communication; (5) develops and implements internal and external public relations strategies to communicate upward and outward to customers, partners, and other stakeholders; and (6) guides news and electronic media activities to communicate disease prevention and health promotion messages.

Office of the Director (CAU1). (1) Manages, directs, coordinates, and evaluates the activities of the OADC; (2) ensures CDC communication activities follow policy directions established by the Department of Health and Human Services (HHS); (3) establishes, administers, and coordinates CDC's health communication and marketing policies to ensure communication efforts reflect the scientific integrity of all CDC research, programs, and activities, and information is factual, accurate, and targeted toward improving public health; (4) establishes and interprets policies and determines priorities for communicating the value and benefits of CDC programs; (5) provides guidance on leadership communication effectiveness; (6) provides leadership and guidance in using efficient and transparent processes to communicate the decision-making activities of CDC's leadership; (7) facilitates coordination throughout the agency to ensure the distribution of messages through the right channels and to the appropriate audience(s); (8) serves as the principal advisor on communication and marketing science, research, and practice; (9) establishes measures of success and effectiveness of CDC communication efforts and provides guidance to CDC programs on applying the measures; (10) ensures that the content of CDC communications is accessible (available, understandable, actionable) to audiences that may have specific health literacy needs; (11) identifies and implements strategies for health literacy and multilingual translation and delivery of CDC information tailored to specific audiences for maximum health impact; (12) chairs the CDC Excellence in Marketing Committee; (13) serves as liaison to Centers/Institute/Offices (CIO) Health Communication Science Offices; (14) provides agency-wide leadership, technical assistance, and consultation in reputational risk communication and reputational management; (15) conducts emergency risk communication training at the national, state, and local levels; (16) manages and coordinates the HHS and Office of Management and Budget clearances for CDC communications and marketing programs and research (17) provides leadership, oversight, and guidance in the management and operations of OADC's programs; (18) provides administrative management support, advice, and guidance to OADC, in the areas of fiscal management, personnel, travel, and other administrative services; (19) coordinates the development of the OADC's annual budget submission and spending plan; (20) plans, allocates, and monitors OADC's resources; (21) maintains liaison and collaborates with other CDC components, federal agencies, and external organizations in support of OADC management and operations, interagency agreements, memorandums of understanding, procurements, and material management; and (22) serves as the primary point of contact with PGO on procurement functions.

Division of News and Electronic Media (CAUB). (1) Supports OADC and CDC through the creation, design, development, and evaluation of effective communication technologies that enhance the presentation and distribution of CDC's products and services; (2) assists CDC information developers in planning, designing, usability testing, and maintaining Web sites, mobile applications/devices, and other communication technologies; (3) provides leadership and management for CDC's Web site (*http://www.cdc.gov*); (4) plans, organizes, administers, and, when appropriate, implements CDC's media activities consistent with policy direction established by the Assistant Secretary for Public Affairs, HHS; (5) provides leadership in the development of CDC's priorities, strategies, and practices for effective media relations; (6) provides for the content, policy review, and clearance of media materials including press releases, press kits, talking points, letters to editors, and fact sheets; (7) provides the public, through media channels, access to information systems, services, and materials that support or promote the health of individuals and communities; and (8) manages and responds to media requests for access to subject matter experts, reports, and publications.

Office of the Director (CAUB1). (1) Provides leadership and management of the agency's news and electronic media activities, including strategic direction, core functions, and organizational structure; (2) provides expertise, guidance and recommendations to CDC's director, leadership and CIOs on effective and appropriate use of news and electronic media; (3) helps plan, organize and direct the activities of the division; (4) establishes and regularly reviews the division's goals and objectives; (5) provides agency management with expertise and abilities to implement news and electronic media efforts and initiatives, including management of CDC's Web site and new/social media activities; (6) provides oversight and coordination for division activities related to media relations, media surveillance, electronic media, new media, social networks, and user experience with these channels; (7) provides advice, guidance, and direction on a wide range of media activities and administrative issues; (8) collaborates and coordinates with other organizational units on news and electronic media; (9) identifies need for updates or changes in the agency's news and electronic media activities, services and priorities and takes action to implement such updates or changes; and (10) serves as CDC's liaison to HHS Office of Assistant Secretary for Public Affairs on news and electronic media policies, procedures, and clearance.

Electronic Media Branch (CAUBB). (1) Provides leadership to CDC for the selection, use, design, development, and evaluation of e-Health and communication technologies that enhance the presentation and distribution of CDC's products, services, science, resources and recommendations; (2) leads and coordinates CDC.gov's governance

bodies (CDC.gov Council, CDC.gov Executive Board, CDC.gov Executive Committee, CDC en Espanol, and related workgroups) and c-Health-related Communities of Practice and work groups; (3) provides agency-wide leadership, coordination and support for CDC's Web site (*http://www.cdc.gov*) and CDC's new and social media use; (4) creates and distributes CDC.gov and social media guidance, standards, tools, and other resources for CDC centers and programs; (5) provides day-to-day management for CDC.gov/CDC en Espanol top tier sites and CDC's social media presences; (6) provides leadership, management, and oversight for CDC-wide Web and social media systems and architectures (i.e., Web Content Management System, mobile services, CDC.gov servers, Web translation services, search engine, content syndication); (7) conducts and supports research in user experience, health impact evaluation, and communication technology areas in collaboration with other CDC/HHS organizations; (8) leads, coordinates, and/or supports online collaborations with partners; (9) collects and analyzes user data/metrics from communication technologies to assess health impact, system performance, usability, accessibility, and usefulness; (10) coordinates CDC's risk and emergency social media communications; and (11) plans, organizes, administers, and, when appropriate, implements CDC's electronic media activities consistent with policy direction established by the Office of the Assistant Secretary for Public Affairs, HHS.

News Media Branch (CAUBC). (1) Provides leadership in the development of CDC's priorities, strategies, and practices for effective news media relations; (2) provides expertise, guidance, and recommendations to CDC's Director, leadership, and CIOs in effective and appropriate news media strategies, plans, responses, and initiatives; (3) provides for the content, policy review, and clearance of news media materials including press releases, press kits, talking points, letters to editors, and fact sheets; (4) manages and maintains CDC's online newsroom; (5) provides the public, through news media channels, access to information systems, services, and materials that support or promote the health of individuals and communities; (6) manages and responds to news media requests for access to subject matter experts, reports, and publications; (7) assists the CDC's CIOs in identifying and building needed expertise, technology, logistical support, and other capacities required for effective news media relations; (8) creates and maintains liaison with the CDC's CIOs to share information about news media issues and opportunities; (9) coordinates the development, review, clearance, and dissemination of news media materials and information among CIOs and between CDC and HHS; (10) assists CIOs in identifying, evaluating and meeting news media-related needs and priorities; (11) provides news media/spokesperson training and technical assistance to CDC staff; (12) provides a central point of contact to CDC for news media representatives; and (13) periodically evaluates CDC's news media relations operations, activities, and services, including feedback from internal users and journalists.

Division of Communication Services (CAUD). (1) Provides agency-wide production and broadcast (audio and video) distribution support of communication materials directed to key target audiences; (2) provides and manages CDC-wide graphic design and production services; (3) collects and/or facilitates distribution of graphic, digital, and broadcast materials; (4) produces and collaborates on new broadcast communication mechanisms (e.g. HHS TV, CDC TV, radio/TV broadcasting, pod casting, web casting, and video-on-demand) for agency-level communications with the public and partners to include selection and promotion of content on selected channels and evaluation of its reach; (5) provides oversight for broadcast delivery mechanisms for inbound and outbound broadcast communications (*e.g.,* press conferences, interviews); (6) provides consultation and links to resources to assist the CIOs in conducting formative, process and outcome research, and evaluation of specific applications of health communication and marketing in program areas; (7) assists the CIOs in identifying appropriate target audiences and messages; and (8) researches and works with other agency programs to develop new mechanisms to communicate with the public.

Office of the Director (CAUD1). (1) Develops, manages, directs, and coordinates the implementation of strategic priorities and programmatic activities of the division; (2) establishes division goals and objectives; (3) provides, manages, and consults around CDC-wide communication services including broadcast, audio, and video material production; graphic arts, photography, and related visual information services; (4) provides writer editor services for OADC; (4) manages broadcast delivery mechanisms for outbound broadcast communications; and (5) researches and works with other agency programs to use existing or develop new mechanisms for agency-level communications with the public as well as partners such as public health professionals and business.

Broadcast Services Branch (CAUDB). (1) Develops, produces and manages use of audio, video, and multimedia health information products; (2) provides agency-wide and global communication capacity using state-of-the-art high-definition broadcast, webcast and emerging social and health media delivery channels on a real time and/or recorded basis; (3) manages media assets of all broadcast video and audio programming developed within CDC; (4) supports the communication needs of the CDC Emergency Operations Center to assure response capacity and capability for emergency broadcasts; (5) manages all CDC broadcast-grade audio and video production requirements; (6) develops and delivers programming, in coordination with HHS, to provide timely and accurate health information to the public, domestically and globally; (7) provides broadcast support for CDC public affairs programming; (8) provides audio-only production services; (9) provides and supports the creation and production of emerging social and health media products; (10) collaborates with other areas of CDC in reviewing potential audio and video technology; and (12) develops and manages distance education, health communication, and training products to reach public health partners and professionals.

Graphics Services Branch (CAUDC). (1) Coordinates agency-wide visual information activities; (2) designs, develops, and produces graphic illustrations, scientific posters, desktop published documents, visual presentations, conference materials, brochures and fact sheets, newsletters, and exhibits; (3) provides high-end medical illustration and motion graphics for CDC programs and services; (4) provides creative direction/leadership for graphics products to ensure consistency with established agency guidelines and quality standards set within the division, and (5) assesses skills and training needs and provides training, directly or by referral, for graphics staff to assure that all are capable of providing quality graphic services for the agency.

Strategic and Proactive Communications Branch (CAUDD). (1) Accepts, tracks, and triages client requests for OADC and Division services; (2) manages and maintains an online request, workflow triage and

tracking, performance measurement, and program service indicator system; (3) manages large or multidisciplinary projects through a team of client service staff who serve as the division's creative project coordinators in collaboration with other CDC organizations and programs; (4) gathers and monitors customer satisfaction information and addresses concerns as necessary; (5) monitors and manages performance, and evaluates and communicates findings to the division's leadership and other appropriate staff for follow-up and potential action; (6) provides/manages scientific and event photography; (7) identifies or develops/updates, disseminates, and ensures CDC communication program staff are familiar with and follow policy directions established by both CDC HHS; (8) ensures analytic function for interpretation of data from centralized marketing databases, sources of environmental scanning, and communication literature for use in development and implementation of strategies for communication activities; (9) provides for systematic mechanisms for gaining public input on health issues and priorities (e.g., advisory mechanisms, focus groups, polling, legislative, and media tracking) and for the systematic application of knowledge gained from such input into agency decision-making; (10) establishes measures of success and effectiveness of CDC communication efforts and provides guidance to CDC programs on applying these measures; and (11) provides consultation to the agency on strategic communication planning and implementation, and evaluation of health communication and social marketing theories and techniques that support programmatic health objectives.

Division of Community Engagement (CAUE). (1) Provides leadership and guidance on developing and implementing external public relations strategies to communicate upward and outward to customers, partners, and other stakeholders; (2) provides leadership and guidance on developing and implementing internal public relations strategies to communicate to the agency's workforce; (3) collaborates with stakeholders and partners, responsible for the planning, coordination and management of CDC's Global Communications Center (GCC); (4) provides conference management support to internal and external customers for meetings held in the GCC; (5) provides leadership for CDC–INFO, CDC's telephone, e-mail, and fulfillment services center; and (6) facilitates CDC's participation in external community events and activities.

Office of the Director (CAUE1). (1) Develops, manages, directs, and coordinates the implementation of strategic priorities and programmatic activities of the division; (2) establishes division goals and objectives; (3) creates a recognized and valued system of employee communication that helps improve communication between CDC leadership and employees, and across employee groups; (4) manages the Global Health Odyssey, CDC's scientific museum and learning center; (5) develops and implements external public relations strategies to communicate upward and outward to customers, partners, and other stakeholders; (6) manages the infrastructure support for the CDC Director's All Hands Sessions; (7) manages and coordinates the use of the CDC exhibit at public health conferences; (8) maintains an active relationship with the CDC Foundation to promote the CDC in the greater community; (9) provides leadership and guidance in documenting the history of CDC's science and programs; (10) provides leadership and guidance for established and new community initiatives; and (11) manages the GCC.

Employee Communications (CAUE12). (1) Designs, plans, organizes, develops, and implements employee communication activities; (2) provides infrastructure, support and oversight of OADC's Intranet Web site, CDC's Intranet leadership Web site, and CDC's *www.cdc.gov* About CDC Web site; (3) provides the central point of contact to CDC for the CDC Intranet and CDC announcements; (4) provides leadership in the development and branding of CDC's Intranet sites and pages; (5) creates and maintains liaison with the CDC's CIOs to share information about employee communication and assists in meeting employee communication goals; (6) develops communication for information dissemination through CDC Connects and other employee communication mechanisms; (7) conducts employee research to enhance and improve CDC Connects and other channels of employee communication; (8) provides employees access to information systems, services, and materials held on the intranet that support or promote their health, morale, and work efficiency; and (9) serves as liaison to former employees and retirees.

CDC–INFO (CAUE13). (1) Provides the public with accessible, accurate, and credible health information in English and Spanish, 24/7, through phone, e-mail, and postal mail channels; (2) assesses and maintains contact center standards for quality assurance, customer satisfaction, contact center performance, and health impact; (3) provides contact center surge support to the Agency per established policies and procedures in collaboration with the CDC Emergency Operations Center, Joint Information Center; (4) manages CDC's health publications distribution facility, publications ordering pages, and internal publications ordering systems; (5) collects and manages CDC–INFO data to inform CDC programmatic and communication planning; and (6) assesses and maintains exemplary service to internal program customers.

Dated: April 19, 2010.

William P. Nichols,

Chief Operating Officer, Centers for Disease Control and Prevention.

[FR Doc. 2010–9804 Filed 4–27–10; 8:45 am]

BILLING CODE 4160–18–M

DEPARTMENT OF HEALTH AND HUMAN SERVICES

Centers for Disease Control and Prevention

Statement of Organization, Functions, and Delegations of Authority

Part C (Centers for Disease Control and Prevention) of the Statement of Organization, Functions, and Delegations of Authority of the Department of Health and Human Services (45 FR 67772–76, dated October 14, 1980, and corrected at 45 FR 69296, October 20, 1980, as amended most recently at 75 FR 14608, dated March 26, 2010) is amended to reflect the reorganization of the Office of the Chief of Staff, Office of the Director, Centers for Disease Control and Prevention.

Section C–B, Organization and Functions, is hereby amended as follows: Delete in their entirety the title and functional statements for the Office of the Chief of Staff (CAT) and insert the following:

Office of the Chief of Staff (CAT). The Office of the Chief of Staff (OCS) is accountable for providing strategic advice to the Director and ensuring proactive coordination of agency-wide priorities and policies in direct support of CDC's mission. In carrying out its mission, the OCS: (1) Serves as the principal advisor to the Director, CDC, on internal and external affairs of CDC; (2) convenes key leadership for assessment, management, mitigation options, and resolution of issues and initiatives affecting CDC's priorities and goals; (3) provides information to senior

management, as necessary, to make timely strategic and operational decisions; (4) assists in assuring that CDC viewpoints are appropriately represented in the decision making process; (5) provides leadership in the resolution of issues that cross organizational lines; (6) assists in determining CDC objectives and priorities; (7) provides a conduit for background information and updates on controversial or sensitive issues that may be raised by CDC Foundation constituents; (8) serves as one of the Director's primary strategic liaisons with staff, partners and the community at large; and (9) represents the Office of the Director (OD) on any council or CDC peer organizations on management and operational matters.

Office of the Director (CAT1). (1) Directs, manages, and coordinates the activities of the OCS; (2) provides executive support for the Immediate Office of the Director; (3) oversees functions of the Meeting and Advance Team Management Activity, and Budget and Operations Management Activity; and (4) develops goals and objectives, provides leadership, policy formation, oversight, and guidance in program planning and development.

Meeting and Advance Team Management Activity (CAT12). (1) Coordinates and manages the CDC Director's schedule, travel, and oversees the development of briefing materials; (2) manages executive and senior level meetings, inclusive of preparing for and conducting leadership meetings and identifying, triaging, supervising and tracking action items stemming from these leadership meetings; (3) oversees all activities related to the Advisory Committee to the Director and its subcommittees and workgroups; (4) coordinates CDC Foundation requests for the Director and senior leadership appearances at board meetings, special events, speaking engagements, and similar external events; and (5) manages OD-level special events and VIP visits.

Budget and Operations Management Activity (CAT13). (1) Serves as a primary point of contact with the CDC Foundation, specifically for coordination and decision support with other pre-established points of contact across CDC; (2) interfaces on behalf of the OD with CDC budget and operations personnel on cross-cutting functions; (3) coordinates the development, implementation (including spending plan) tracking, and reporting of the OD budget; (4) oversees administrative functions for the OD, including strategic recruitment, personnel actions, training and employee development, space requests and allocation, procurement and distribution of equipment and supplies; (5) manages senior staff within the OD such as staff on details and Intergovernmental Personnel Actions (IPAs); (6) provides an avenue of outreach to the corporate and philanthropic sector about CDC's critical priorities and sponsor/convene in support of the CDC OD; and (7) coordinates approval of all draft proposals for new project partnerships involving CDC and the CDC Foundation.

Division of Executive Secretariat (CATB). (1) Manages controlled correspondence and clearance of non-scientific documents including the flow of decision documents and correspondence for action by the CDC Director; (2) serves as the point of contact with HHS Immediate Office of the Secretary, Executive Secretariat, for status of Secretary's controlled correspondence and review-clear of non-scientific documents; (3) serves as the focal point for the analysis, technical review, and final clearance of controlled correspondence, non-scientific policy documents and memoranda of understanding/agreement that require approval from the CDC Director and senior leadership, and for a wide variety of documents that require the approval of various officials within HHS; (4) ensures controlled correspondence responses and reports reflect CDC/ATSDR's priorities and positions on critical public health issues; (5) maintains all official records relating to the decisions and official actions of the Director, CDC; (6) manages the electronic signature of the Director and other OD executives; (7) coordinates the use of the official CDC/ATSDR controlled correspondence tracking system throughout CDC; (8) ensures consistent application of CDC correspondence standards and styles; (9) ensures agency training and communication updates on the controlled correspondence; and (10) coordinates Inspector General and General Accountability Office audit and evaluation engagements related to CDC/ATSDR.

Division of Issues Management, Analysis and Coordination (CATC). (1) Identifies and triages issues across the Office of the Director in collaboration with agency leadership to ensure efficient responses to the Director's priority issues, and helps position CDC to take advantage of emerging opportunities; (2) supports key leadership in assessment, management, mitigation options, and resolution of issues and initiatives affecting CDC's priorities and goals; (3) establishes an environmental scanning system and network throughout CDC to identify urgent and high risk issues and opportunities related to the Director's priorities; (4) convenes teams to assess, analyze, manage and provide mitigation options and resolution of risks; (5) cultivates strong vertical and horizontal relationships to facilitate effective issues management within OD, with the Centers/Institute/Offices (CIOs) and with HHS; (6) communicates findings and status of current and ongoing issues, trends and opportunities to senior leadership, CIOs and I–IHS through formal advisories, alerts and briefings on key agency issues; (7) works in collaboration with other OD offices to build issues management capacity throughout the agency through training and networking with CIO leadership and staff; (8) provides integrated policy analysis and strategic consultation to the Director, CDC and senior leadership on major issues affecting CDC; (9) liaises with the HHS Office of the Secretary as appropriate on critical issues on behalf of the Chief of Staff, (10) provides a forum for OD offices for discussion and decision-making on policy related issues and Director priorities; (11) provides leadership in identifying regulatory priorities and supports development of regulations for the Department; (12) tracks and coordinates review of clearance of regulations under development and serves as CDC's point of contact for the Federal Document Management System; (13) develops and distributes leadership reports, including the Secretary's 90-Day Forecast report, the Weekly Cabinet Report and weekly situation reports; and (14) manages internal communication for the OCS.

Dated: April 19, 2010.

William P. Nichols,

Chief Operating Officer, Centers for Disease Control and Prevention.

[FR Doc. 2010–9803 Filed 4–27–10; 8:45 am]

BILLING CODE 4163–18–M

DEPARTMENT OF HOMELAND SECURITY

Federal Emergency Management Agency

[Internal Agency Docket No. FEMA–1895–DR; Docket ID FEMA–2010–0002]

Massachusetts; Amendment No. 1 to Notice of a Major Disaster Declaration

AGENCY: Federal Emergency Management Agency, DHS.

ACTION: Notice.

SUMMARY: This notice amends the notice of a major disaster declaration for the Commonwealth of Massachusetts

(FEMA–1895–DR), dated March 29, 2010, and related determinations.

DATES: *Effective Date:* April 22, 2010.

FOR FURTHER INFORMATION CONTACT: Peggy Miller, Recovery Directorate, Federal Emergency Management Agency, 500 C Street, SW., Washington, DC 20472 (202) 646–3886.

SUPPLEMENTARY INFORMATION: The notice of a major disaster declaration for the Commonwealth of Massachusetts is hereby amended to include the Public Assistance program for the following areas among those areas determined to have been adversely affected by the event declared a major disaster by the President in his declaration of March 29, 2010.

Bristol, Essex, Middlesex, Norfolk, Plymouth, Suffolk, and Worcester Counties for Public Assistance, including direct Federal assistance (already designated for Individual Assistance).

The following Catalog of Federal Domestic Assistance Numbers (CFDA) are to be used for reporting and drawing funds: 97.030, Community Disaster Loans; 97.031, Cora Brown Fund; 97.032, Crisis Counseling; 97.033, Disaster Legal Services; 97.034, Disaster Unemployment Assistance (DUA); 97.046, Fire Management Assistance Grant; 97.048, Disaster Housing Assistance to Individuals and Households In Presidentially Declared Disaster Areas; 97.049, Presidentially Declared Disaster Assistance—Disaster Housing Operations for Individuals and Households; 97.050 Presidentially Declared Disaster Assistance to Individuals and Households—Other Needs; 97.036, Disaster Grants—Public Assistance (Presidentially Declared Disasters); 97.039, Hazard Mitigation Grant.

W. Craig Fugate,

Administrator, Federal Emergency Management Agency.

[FR Doc. 2010–9781 Filed 4–27–10; 8:45 am]

BILLING CODE 9111–23–P

DEPARTMENT OF HOMELAND SECURITY

U.S. Customs and Border Protection; Tuna—Tariff-Rate Quota

The Tariff-Rate Quota for Calendar Year 2010 Tuna Classifiable Under Subheading 1604.14.22, Harmonized Tariff Schedule of the United States (HTSUS)

AGENCY: U.S. Customs and Border Protection, Department of Homeland Security.

ACTION: Announcement of the quota quantity of tuna in airtight containers for Calendar Year 2010.

SUMMARY: Each year the tariff-rate quota for tuna described in subheading 1604.14.22, HTSUS, is based on the apparent United States consumption of tuna in airtight containers during the preceding Calendar Year. This document sets forth the tariff-rate quota for Calendar Year 2010.

DATES: *Effective Dates:* The 2010 tariff-rate quota is applicable to tuna entered or withdrawn from warehouse for consumption during the period January 1, through December 31, 2010.

FOR FURTHER INFORMATION CONTACT: Headquarters Quota Branch, Textile/Apparel Policy and Programs Division, Trade Policy and Programs, Office of International Trade, U.S. Customs and Border Protection, Washington, DC 20229, (202) 863–6560.

Background

It has been determined that 16,618,716 kilograms of tuna in air-tight containers may be entered and withdrawn from warehouse for consumption during the Calendar Year 2010, at the rate of 6 percent ad valorem under subheading 1604.14.22, HTSUS. Any such tuna which is entered or withdrawn from warehouse for consumption during the current calendar year in excess of this quota will be dutiable at the rate of 12.5 percent ad valorem under subheading 1604.14.30 HTSUS.

Dated: April 23, 2010.

Daniel Baldwin,

Assistant Commissioner, Office of International Trade.

[FR Doc. 2010–9868 Filed 4–27–10; 8:45 am]

BILLING CODE 9111–14–P

DEPARTMENT OF HOUSING AND URBAN DEVELOPMENT

[Docket No. FR–5376–N–28]

FHA TOTAL Mortgage Scorecard

AGENCY: Office of the Chief Information Officer, HUD.

ACTION: Notice.

SUMMARY: The proposed information collection requirement described below has been submitted to the Office of Management and Budget (OMB) for review, as required by the Paperwork Reduction Act. The Department is soliciting public comments on the subject proposal.

The data collection requirements consist of an electronic lender certification process and requirements to provide reports and loan samples at FHA's request, and appeals in writing for loss of privilege to use the scorecard.

DATES: *Comments Due Date: May 28, 2010.*

ADDRESSES: Interested persons are invited to submit comments regarding this proposal. Comments should refer to the proposal by name and/or OMB approval Number (2502–0556) and should be sent to: HUD Desk Officer, Office of Management and Budget, New Executive Office Building, Washington, DC 20503; fax: 202–395–5806.

FOR FURTHER INFORMATION CONTACT: Leroy McKinney, Jr., Reports Management Officer, QDAM, Department of Housing and Urban Development, 451 Seventh Street, SW., Washington, DC 20410; e-mail Leroy McKinney, Jr. at *Leroy.McKinneyJr@hud.gov* or telephone (202) 402–5564. This is not a toll-free number. Copies of available documents submitted to OMB may be obtained from Mr. McKinney.

SUPPLEMENTARY INFORMATION: This notice informs the public that the Department of Housing and Urban Development has submitted to OMB a request for approval of the Information collection described below. This notice is soliciting comments from members of the public and affecting agencies concerning the proposed collection of information to: (1) Evaluate whether the proposed collection of information is necessary for the proper performance of the functions of the agency, including whether the information will have practical utility; (2) Evaluate the accuracy of the agency's estimate of the burden of the proposed collection of information; (3) Enhance the quality, utility, and clarity of the information to be collected; and (4) Minimize the burden of the collection of information on those who are to respond; including through the use of appropriate automated collection techniques or other forms of information technology, *e.g.,* permitting electronic submission of responses.

This notice also lists the following information:

Title of Proposal: FHA TOTAL Mortgage Scorecard.

OMB Approval Number: 2502–0556.

Form Numbers: None.

Description of the Need for the Information and Its Proposed Use: The data collection requirements consist of an electronic lender certification process and requirements to provide reports and loan samples at FHA's request, and appeals in writing for loss of privilege to use the scorecard.

Frequency of Submission: On occasion.

	Number of respondents	Annual responses	x	Hours per responses	=	Burden hours
Reporting Burden	12,000	0.0376		2		908

Total Estimated Burden Hours: 908.

Status: Extension of a currently approved collection.

Authority: Section 3507 of the Paperwork Reduction Act of 1995, 44 U.S.C. 35, as amended.

Dated: April 22, 2010.

Leroy McKinney, Jr.,

Departmental Reports Management Officer, Office of the Chief Information Officer.

[FR Doc. 2010–9852 Filed 4–27–10; 8:45 am]

BILLING CODE 4210–67–P

DEPARTMENT OF THE INTERIOR

Bureau of Indian Affairs

Liquor Control Ordinance of the Prairie Band Potawatomi Nation

AGENCY: Bureau of Indian Affairs, Interior.

ACTION: Notice.

SUMMARY: This notice publishes the Amended Prairie Band Potawatomi Nation Liquor Control Ordinance. The Amended Ordinance regulates and controls the possession, sale, and consumption of liquor within the Tribal lands and the treatment and reduction of alcohol abuse and related social problems on the Reservation. The Tribal lands are located in Indian country and this Amended Ordinance allows for possession and sale of alcoholic beverages within their boundaries. This Amended Ordinance will increase the ability of the Tribal government to control the community's liquor distribution and possession, and at the same time will provide an important source of revenue for the continued operation and strengthening of the Tribal government and the delivery of Tribal services.

DATES: *Effective Date:* This Amended Ordinance is effective on May 28, 2010.

FOR FURTHER INFORMATION CONTACT: Sherry Lovin, Tribal Government Services Officer, Southern Plains Regional Office, WCD Office Complex, P.O. Box 368, Anadarko, OK 73005, Telephone: (405) 247–1537, Fax (405) 247–9240; or Elizabeth Colliflower, Office of Indian Services, 1849 C Street, NW., Mail Stop 4513–MIB, Washington, DC 20240, Telephone: (202) 513–7641.

SUPPLEMENTARY INFORMATION: Pursuant to the Act of August 15, 1953, Public Law 83–277, 67 Stat. 586, 18 U.S.C. 1161, as interpreted by the Supreme Court in *Rice* v. *Rehner,* 463 U.S. 713 (1983), the Secretary of the Interior shall certify and publish in the **Federal Register** notice of adopted liquor ordinances for the purpose of regulating liquor transactions in Indian country. The Tribal Council of the Prairie Band Potawatomi Nation adopted its Amended Liquor Control Ordinance by Resolution No. 2009–128A on July 15, 2009. The purpose of this Amended Ordinance is to govern the sale, possession, and distribution of alcohol within Tribal lands of the Tribe.

This notice is published in accordance with the authority delegated by the Secretary of the Interior to the Assistant Secretary—Indian Affairs. I certify that the Tribal Council of the Prairie Band Potawatomi Nation adopted its Amended Liquor Control Ordinance by Resolution No. 2009–128A on July 15, 2009.

Dated: April 15, 2010.

Donald Laverdure,

Deputy Assistant Secretary—Indian Affairs.

The Liquor Control Ordinance of the Prairie Band Potawatomi Nation reads as follows:

Liquor Control Ordinance of the Prairie Band Potawatomi Nation

Introduction

Title. This ordinance shall be known as the "Prairie Band Potawatomi Liquor Control Ordinance."

Authority. This ordinance is enacted pursuant to the Act of August 15, 1953, 67 Stat. 586, codified at 18 U.S.C. Sec. 1161, by the authority of the Prairie Band Potawatomi Tribal Council under the Constitution of the Prairie Band Potawatomi Nation, Article V, Sections 1(g) and (i).

General Purpose. The purpose of this ordinance is to provide civil laws for the tribal regulation and control of liquor within the Prairie Band Potawatomi Reservation. The enactment of this ordinance governing liquor on the Reservation will increase the ability of the tribal government to control the sale, distribution and possession of liquor and will provide revenue for the continued operation and strengthening of the tribal government and the delivery of tribal government services for the regulation of liquor and the treatment and reduction of alcohol abuse and related social problems on the Reservation. The civil penalties, taxes and other liabilities imposed by this ordinance are reasonably necessary and related to the expense of governmental administration necessary to maintain law and order and public health and safety on the Reservation. It is the legislative intent of the Tribal Council that all violations of this ordinance, whether committed by tribal members, non-member Indians or non-Indians be considered civil in nature rather than criminal.

Article I. Declaration of Public Policy and Purposes

(1) The introduction, possession, and sale of liquor on the Prairie Band Potawatomi Reservation are matters of special concern to the Prairie Band Potawatomi Nation.

(2) Federal law prohibits the introduction of liquor into Indian Country (18 U.S.C. Sec. 1154 and other statutes), except as provided therein, and expressly affirms and delegates to Tribes the governmental authority to regulate and control liquor on Indian Reservations. (18 U.S.C. Sec. 1161)

(3) Legislative Findings. The Tribal Council finds that a need exists for strict regulation and control over liquor transactions within the Reservation because of the many problems associated with the sale, possession, distribution, and consumption of liquor. The Tribal Council finds that tribal control and regulation of liquor is necessary to address serious social problems relating to alcohol use on the Reservation. This ordinance is intended to protect the members of the Nation on the Reservation by prohibiting and regulating conduct that threatens and directly affects their health, safety and welfare. The Tribal Council further finds that:

(a) Alcohol abuse is a serious problem on the Reservation. Alcohol abuse leads to frequent early loss of life and morbidity among tribal members and other residents of the Reservation. For example, the accident death rates due to homicide, suicide, motor vehicle accidents and diseases related to alcohol abuse are several times higher among tribal members than among the general population of the United States, and a great number of the serious trauma cases treated by the Indian Health Service (IHS) on reservations are alcohol related. According to the IHS, the rates for the Nation's adults with alcohol

problems are four times that of non-Reservation residents in northeast Kansas.

(b) Alcohol abuse causes and perpetuates dysfunctional families on the Reservation. The vast majority of child abuse, spousal abuse and elderly abuse that occurs on the Reservation is alcohol related.

(c) Fetal Alcohol Syndrome and Fetal Alcohol Effect occur at alarming rates among children born within Indian Tribes. Children born with prenatal alcohol damage have difficulty caring for themselves all of their lives. The Nation has a compelling interest in protecting children from Fetal Alcohol Syndrome and Fetal Alcohol Effect.

(d) Unemployment is high among tribal members on the Reservation and poverty is widespread. Many tribal members suffer serious economic deprivation due to alcohol abuse, ranging from unemployment to malnutrition.

(e) Alcohol abuse contributes to the vast majority of the crime which takes place within tribal territory and places heavy burdens on the tribal criminal justice system and the tribal courts.

(f) Alcohol abuse has a devastating impact on our families and the Reservation community, and the Tribal Council has a duty to combat alcohol abuse.

(g) Both the Nation and the Federal Government devote tremendous resources to prevent and treat problems of alcohol abuse on the Reservation, yet even the combined prevention and treatment programs sponsored by the Nation and the Federal Government are not sufficient to address the problems of alcohol abuse. Far more must be done.

(h) The Nation must exercise its regulatory authority to combat the problems of alcohol abuse on the Reservation through a comprehensive, consistent and clearly defined plan to minimize alcohol consumption on the Reservation and to discourage unsafe drinking practices. In addition, the Nation must raise additional revenue to combat the problems of alcohol abuse.

(4) For the spiritual well-being of our children and families and for the survival and strengthening of our people, the Prairie Band Potawatomi Nation strives for the elimination of alcohol abuse and its associated problems from the Prairie Band Potawatomi Reservation. In furtherance of this purpose, the Tribal Council hereby declares that it is the policy of the Nation:

(a) To minimize alcohol consumption on the Reservation;

(b) To discourage unsafe drinking practices, including, but not limited to, driving while intoxicated, alcoholism or chronic intoxication, violence related to alcohol abuse, public intoxication and drinking during pregnancy;

(c) To minimize the adverse health effects of drinking alcohol through prevention, regulation and treatment;

(d) To protect unborn children, who are people in their own right, from prenatal alcohol damage;

(e) To control the supply and conditions of availability of liquor through regulation, education and taxation;

(f) To maximize education, prevention and treatment programs to fight alcohol abuse; and

(g) To cause those who sell, consume or promote alcohol on the Reservation to bear a greater proportion of the costs associated with alcohol use and abuse through civil penalties concerning and taxation of liquor and liquor dealers and dedicating the revenue derived for alcohol abuse education, enforcement, prevention, regulation and treatment.

(5) It is in the best interests of the Nation to enact a tribal ordinance governing liquor sales on the Reservation which provides for exclusive purchase, distribution, and sale of liquor only on tribal lands within the exterior boundaries of the Reservation. Further, the Nation has determined and hereby requires that said purchase, distribution, and sale shall take place only at tribally-owned gaming facility complexes and other tribally-owned enterprises.

Article II. Definitions

(1) As used in the title, these words shall have the following meanings unless the context clearly requires otherwise:

(a) "Alcohol" means that substance known as ethyl alcohol, hydrated oxide of ethyl, alcohol, ethanol, or spirits of wine, from whatever source or by whatever process produced.

(b) "Bar" means any establishment with special space and accommodations for the sale of liquor by the glass and for consumption on the premises.

(c) "Beer" means any alcoholic beverage obtained by the alcoholic fermentation of an infusion or decoction of pure hops, or pure extract of hops and pure barley malt or other wholesome grain or cereal in water.

(d) "Liquor" includes all fermented, spirituous, vinous, or malt liquor or combinations thereof, and mixed liquor, a part of which is fermented, and every liquid or solid or semisolid or other substance, patented or not, containing distilled or rectified spirits, potable alcohol, beer, wine, brandy, whiskey, rum, gin, aromatic bitters, and all drinks or drinkable liquids and all preparations or mixtures capable of human consumption and any liquid, semisolid, solid, or other substances, which contain alcohol.

(e) "Liquor Store" means any store at which liquor is sold and, for the purpose of this ordinance, including stores only a portion of which are devoted to sale of liquor.

(f) "Malt Liquor" means beer, strong beer, ale, stout and porter.

(g) "Nation" means the Prairie Band Potawatomi Nation.

(h) "Package" means any container or receptacle used for holding liquor.

(i) "Person" means any natural person, firm, partnership, joint venture, association, corporation, municipal corporation, estate, trust, business receiver, or any group or combination acting as a unit and the plural as well as the singular in number.

(j) "Public Place" includes State, county, tribal or Federal highways or roads; buildings and grounds used for school purposes; public dance halls and grounds adjacent thereto; soft drink establishments, public buildings, public meeting halls, lobbies, halls and dining room of hotels, restaurants, theaters, gaming facilities, entertainment centers, stores, garages, and filling stations which are open to and/or are generally used by the public and to which the public is permitted to have unrestricted access; public conveyances of all kinds and character; and all other places of like or similar nature to which the general public has unrestricted right of access, and which are generally used by the public.

(k) "Reservation" means all territory within the exterior boundaries of the area recognized as the Prairie Band Potawatomi Nation's Reservation and all other territory i) which is or in the future may be located outside of said boundaries and ii) to which it is possible to extend the Nation's jurisdiction or authority, including, without limitation, territory within the exterior boundaries of Indian country of the Nation or of its members and all property held by the United States in trust for the Nation or for a member of the Nation.

(l) "Sale" and "Sell" include exchange, barter and traffic, and also include the selling or supplying or distributing of liquor, by any means whatsoever, by any person to any person.

(m) "Spirits" means any beverage which contains alcohol obtained by distillation, including wines exceeding seventeen percent of alcohol by weight.

(n) "Tribal Council" means the governing body of the Prairie Band of Potawatomi Nation.

(o) "Tribal Court" means the Prairie Band Potawatomi Tribal Court.

(p) "Wine" means any alcoholic beverage obtained by fermentation of the natural contents of fruits, vegetables, honey, milk or other products containing sugar, whether or not other ingredients are added during or after fermentation, and containing not more than seventeen percent of alcohol by weight, including sweet wines fortified with wine spirits, such as port, sherry, muscatel and angelica, not exceeding seventeen percent of alcohol by weight.

Article III. Rules, Regulations and Enforcement

(1) It shall be a violation of this ordinance for any person:

(a) To in any manner introduce, sell, offer for sale, distribute, transport, consume, use or possess liquor on the Reservation except as expressly permitted by this ordinance,

(b) To buy liquor on the Reservation from any person other than a tribally-licensed person,

(c) Engaged wholly or in part in the business of carrying passengers for hire, and every agent, servant, or employee of such person, to permit any person to drink liquor in any public conveyance or for any person to consume liquor in a public conveyance,

(d) Under the age of 21 years to consume, acquire or have in possession any liquor. No person owning or controlling a premises shall permit any other person under the age of 21 to consume liquor on such premises except as expressly exempted by this ordinance,

(e) To sell or provide any liquor to any person under the age of 21 years,

(f) To transfer in any manner an identification of age to a person under the age of 21 years for the purpose of permitting such person to obtain liquor; provided, that there is corroborative testimony of a witness other than the underage person,

(g) To attempt to purchase liquor through the use of false or altered identification which falsely purports to show the individual as being over the age of 21 years, or

(h) To possess, introduce or consume liquor at a place or premises that is or would be considered a public, common or other nuisance under any tribal, State or Federal statutory or common law.

(2) Any person who promotes any activity or owns or controls land on which there is any activity that is a violation of this ordinance shall be liable for and subject to the same penalties and proceedings as the person who directly commits the violation.

(3) Any person who commits a violation of this ordinance shall be liable to pay the Nation up to $5,000 per violation as civil penalties.

(4) When requested by the provider of liquor, every person shall be required to present official documentation of the bearer's age, signature and photograph. Official documentation includes one of the following:

(a) Driver's license or identification card;

(b) United States Active Duty Military card; or

(c) Passport.

(5) Liquor which is possessed contrary to the terms of this ordinance is declared to be contraband. Any tribal agent, employee or officer who is authorized by the Tribal Council to enforce this ordinance shall seize all contraband and preserve it in accordance with the provisions established for the preservation of impounded property. Upon being found in violation of the ordinance, the party shall forfeit all right, title and interest in the items seized which shall become the property of the Nation.

Article IV. Abatement

(1) Any room, house, building, vehicle, structure, land or other place where liquor is sold, manufactured, bartered, exchanged, given away, furnished, consumed or possessed or otherwise disposed of in violation of the provisions of this ordinance or of any other tribal law, and all property kept in and used in maintaining such place, is hereby declared to be a nuisance.

(2) The Chairman of the Tribal Council or, if the Chairman fails or refuses to do so, by a majority vote, the Tribal Council may institute and maintain an action in the Tribal Court in the name of the Nation to abate and perpetually enjoin any nuisance declared under this article. In addition to other remedies at tribal law, depending upon the severity of past offenses, the risk of offenses in the future, the effect of the violator's activity on public health, safety or welfare and any other appropriate criteria, the Tribal Court may order the room, house, building, vehicle, structure, land or place closed or it may require the owner, lessee, tenant, or occupant thereof to give bond payable to the Nation, of sufficient sum and conditioned that liquor will not be thereafter manufactured, kept, sold, bartered, exchanged, given away, furnished, possessed, consumed or otherwise disposed of in violation of the provisions of this ordinance or of any other applicable tribal law and that such person will pay all penalties, fees, costs and damages assessed against him for any violation of this ordinance or other tribal laws. If any conditions of the bond be violated, the bond may be applied to satisfy any amounts due to the Nation. No order or injunction closing any business for a violation of this ordinance shall be issued without granting the opportunity to have a full evidentiary and adversary hearing.

(3) In all cases where any person has been found in violation of this ordinance, an action may be brought to abate as a nuisance any real estate or other property involved in the violation of the ordinance, and violation of this ordinance shall be prima facie evidence that the room, house, building, vehicle, structure, land or place against which such action is brought is a public nuisance.

Article V. Powers of Enforcement

(1) In furtherance of this ordinance, the Tribal Council shall have the following powers and duties:

(a) To publish and enforce rules and regulations governing liquor on the Reservation;

(b) To employ managers, accountants, security personnel, inspectors and such other persons as shall be reasonably necessary to allow the Tribal Council to perform its functions;

(c) To issue licenses permitting the sale, manufacture or distribution of liquor on the Reservation;

(d) To bring proceedings in the Tribal Court or other appropriate forum to enforce this ordinance as necessary;

(e) To seek penalties, taxes, damages, fees and other appropriate remedies, orders and injunctions for the violation of this ordinance;

(f) To makes such reports as may be required; and

(g) To collect taxes and fees levied or set by the Tribal Council and to keep accurate records, books and accounts.

(2) In the exercise of its powers and duties under this ordinance, the Tribal Council and its individual members shall not:

(a) Accept any gratuity, compensation or other thing of value from any liquor wholesaler, retailer, or distributor or from any licensee;

(b) Waive the immunity of the Nation from suit without the express written consent and resolution of the Tribal Council.

(3) Inspection Rights. All premises on which liquor is sold, consumed, possessed or distributed shall be open for inspection by the Nation at all reasonable times for the purposes of ascertaining whether the rules and regulations of the Tribal Council and this ordinance are being complied with.

(4) Hearings and Appeals. Violations of this ordinance shall be deemed a civil offense against the Nation. Civil actions by the Nation against violators may proceed in hearings initiated and held by the Nation's Tax Commissioner or other hearing officer designated by Tribal Council. Any such civil proceeding shall comply with all due process requirements of the Indian Civil Rights Act. The Tax Commissioner or the designee may impose penalties, damages, costs, taxes and attorneys fees and take any other actions reasonably necessary to carry out this ordinance. Liabilities imposed under this ordinance shall be a lien upon the violator's property located on the reservation until paid and may be enforced and executed upon through the Tribal Court. Orders issued hereunder may be appealed to Tribal Court and considered under the arbitrary and capricious standard of review.

Article VI. Sales of Liquor

(1) License Required. Sales of liquor on the Reservation may only be made at businesses which hold a Prairie Band Potawatomi Liquor License.

(2) Sales for Cash. All liquor sales on the Reservation shall be on a cash only basis and no credit shall be extended to any person, organization, or entity, except that the provision does not prevent the payment for purchases with use of credit cards such as Visa, MasterCard, American Express, etc.

(3) Sale for Personal Consumption. All sales shall be for the personal use and consumption of the purchaser. Resale of any liquor on the Reservation is prohibited. Any person who is not licensed pursuant to this ordinance who purchases liquor on the Reservation and sells it, whether in the original container or not, shall violate this ordinance.

Article VII. Licensing

(1) Procedure. In order to control the consumption of liquor and the proliferation of establishments on the Reservation which sell or serve liquor by the bottle or by the drink, all persons or entities which desire to sell liquor on the Reservation must apply to the Nation for a license.

(2) Application. Any person or entity applying for a license to sell or serve liquor on the Reservation must fill in the application provided for this purpose by the Nation and pay such application fee as may be set from time to time by the Tribal Council for this purpose. Said application must be filled out completely in order to be considered.

(3) Issuance of License. The Tribal Council may issue a license if it believes that such issuance is in the best interests of the Nation. This ordinance permits tribally-licensed liquor sales and consumption at gaming facility complexes and other tribally owned enterprises on the Reservation. Issuance of a license for any other purposes will not be considered to be in the best interests of the Nation.

(4) Period of License. Each license may be issued for a period not to exceed two (2) years from the date of issuance.

(5) Renewal of License. A licensee may renew its license if the licensee has complied in full with this ordinance provided however, that the Tribal Council may refuse to renew a license if it finds that doing so would not be in the best interests of the health and safety of the Nation.

(6) Revocation of License. The Tribal Council may suspend or revoke a license due to one or more violations of this ordinance upon notice and hearing at which the licensee is given an opportunity to respond to any charges against it and to demonstrate why the license should not be suspended or revoked.

(7) Hearings. Within 15 days after a licensee is mailed written notice of a proposed suspension or revocation of the license, of the imposition of penalties or of other adverse action proposed by the Tribal Council under this ordinance, the licensee may deliver to the Tribal Council a written request for hearing on whether the proposed action should be taken. A hearing on the issues shall be held before a person or persons appointed by the Tribal Council and a written decision will be issued. Such decisions will be considered final unless an appeal is filed with the Tribal Court within 15 days of the date of mailing the decision to the licensee. The Tribal Court will then conduct a hearing and will issue an order using an arbitrary and capricious standard of review. All proceedings conducted under this and any other sections of this ordinance shall be in accord with due process of law.

(8) Non-transferability of Licenses. Licenses issued by the Tribal Council shall not be transferable and may only be utilized by the person or entity in whose name it was issued.

Article VIII. Taxes

(1) Sales Tax. The Tribal Council shall have the authority, as may subsequently be specified under tribal law, to levy and to collect a tax on each retail sale of liquor on the Reservation based upon a percent of the retail sales price. All taxes from the sale of liquor on the Reservation shall be paid over to the General Treasury of the Nation.

(2) Taxes Due. All taxes for the sale of liquor on the Reservation are due on the 15th day of the month following the end of the calendar quarter for which the taxes are due or on such other dates as specified by tribal regulation.

(3) Delinquent Taxes. Past due taxes shall accrue interest at 2% per month.

(4) Reports. Along with payment of the taxes imposed herein, the taxpayer shall submit a quarterly accounting of all income from the sale or distribution of liquor, as well as for the taxes collected.

(5) Audit. As a condition of obtaining a license, the licensee must agree to the review or audit of its book and records relating to the sale of liquor on the Reservation. Said review or audit may be done periodically by the Nation or through its agents or employees whenever, in the opinion of the Tribal Council, such a review or audit is necessary to verify the accuracy of reports.

Article IX. Revenue

(1) Revenue collected under this ordinance, from whatever source, shall be expended for administrative costs incurred in the enforcement of this ordinance. Excess funds shall be subject to appropriation by the Tribal Council for governmental social services, including education, prevention and treatment programs to fight alcohol abuse on the Reservation.

Article X. Exceptions

(1) The introduction, distribution, transport, consumption, sale, offer for sale, use, consumption and possession of liquor is permitted:

(a) For consumption at a gaming facility complex or other tribally-owned enterprise,

(b) For scientific research or manufacturing products other than liquor,

(c) For medical use under the direction of a physician, medical or dental clinic, or hospital,

(d) For preparations not fit for human consumption such as cleaning compounds and toilet products, and for flavoring extracts, or

(e) For sacramental use such as wines delivered to priests, rabbis, and ministers.

(2) The introduction, distribution, transport, consumption, use and possession of liquor for personal consumption by a person legally present on private, non-commercial property are permitted, subject to applicable tribal law.

(3) These exceptions shall be narrowly construed.

Article XI. Severability and Effective Date

(1) If any provision or application of this ordinance is determined by review to be invalid, such determination shall not be held to render ineffectual the remaining portions of this ordinance or to render such provisions inapplicable to other persons or circumstances.

(2) This Amended Ordinance is effective as of 30 days after the date of publication in the **Federal Register**.

(3) Any and all prior liquor control ordinances of the Nation under 18 U.S.C. Sec. 1161 are hereby amended.

Article XII. Amendment and Construction

(1) This ordinance may only be amended by a vote of the Tribal Council or as otherwise allowed by Tribal law.

(2) Nothing in this ordinance shall be construed to diminish or impair in any way the rights or sovereign powers of the Nation or Tribal government.

(Enacted by PBP TC No. 2006–118A, July 12, 2006; PBP TC No. 2009–128, PBP TC No. 2009–128A)

[FR Doc. 2010–9802 Filed 4–27–10; 8:45 am]

BILLING CODE 4310–4J–P

DEPARTMENT OF THE INTERIOR

Fish and Wildlife Service

[FWS–R9–EA–2010–N071]

Sport Fishing and Boating Partnership Council

AGENCY: Fish and Wildlife Service, Interior.

ACTION: Notice of meeting.

SUMMARY: We, the U.S. Fish and Wildlife Service, announce a public meeting of the Sport Fishing and Boating Partnership Council (Council).

DATES: The meeting will be held on Wednesday, May 26, 2010, from 10 a.m. to 5 p.m. (Eastern time). Members of the public wishing to participate in the meeting must notify Douglas Hobbs by close of business on Monday, May 17, 2010, per instructions under **SUPPLEMENTARY INFORMATION.**

ADDRESSES: The meeting will be held at the Department of the Interior, Room 5160, 1849 C Street, NW., Washington, DC 20240.

FOR FURTHER INFORMATION CONTACT: Douglas Hobbs, Council Coordinator, 4401 North Fairfax Drive, Mailstop 3103–AEA, Arlington, VA 22203; telephone (703) 358–2336; fax (703) 358–2548; or e-mail at *doug_hobbs@fws.gov.*

SUPPLEMENTARY INFORMATION: In accordance with the requirements of the Federal Advisory Committee Act, 5 U.S.C. App., we announce that the Sport Fishing and Boating Partnership Council will hold a meeting.

Background

The Council was formed in January 1993 to advise the Secretary of the Interior, through the Director, U.S. Fish and Wildlife Service, on nationally significant recreational fishing, boating, and aquatic resource conservation issues. The Council represents the interests of the public and private sectors of the sport fishing, boating, and conservation communities and is organized to enhance partnerships among industry, constituency groups, and government. The 18-member Council, appointed by the Secretary of the Interior, includes the Director of the Service and the president of the Association of Fish and Wildlife Agencies, who both serve in ex officio capacities. Other Council members are Directors from State agencies responsible for managing recreational fish and wildlife resources and individuals who represent the interests of saltwater and freshwater recreational fishing, recreational boating, the recreational fishing and boating industries, recreational fisheries resource conservation, Native American Tribes, aquatic resource outreach and education, and tourism. Background information on the Council is available at *http://www.fws.gov/sfbpc.*

Meeting Agenda

The Council will convene to consider: (1) The Sport Fish Restoration Boating Access Program; (2) The Fish and Wildlife Service Fisheries Program; (3) Activities of the Recreational Boating and Fishing Foundation in implementing the Strategic Plan for the National Outreach and Communications Program, authorized by the 1998 Sportfishing and Boating Safety Act; (4) information on issues for the Council to include in its 2010 to 2012 Strategic Work Plan; and (5) other Council business. The final agenda will be posted on the Internet at *http://www.fws.gov/sfbpc.*

Procedures for Public Input

Interested members of the public may submit relevant written or oral information for the Council to consider during the public meeting. Questions from the public will not be considered during this period. Speakers who wish to expand upon their oral statements or those who had wished to speak but could not be accommodated on the agenda are invited to submit written statements to the Council.

Individuals or groups requesting an oral presentation at the public Council meeting will be limited to 2 minutes per speaker, with no more than a total of 30 minutes for all speakers. Interested parties should contact Douglas Hobbs, Council Coordinator, in writing (preferably via e-mail), by Monday, May 17, 2010, (*See* **FOR FURTHER INFORMATION CONTACT**) to be placed on the public speaker list for this meeting. Written statements must be received by Wednesday, May 19, 2010, so that the information may be made available to the Council for their consideration prior to this meeting. Written statements must be supplied to the Council Coordinator in both of the following formats: One hard copy with original signature, and one electronic copy via e-mail (acceptable file format: Adobe Acrobat PDF, WordPerfect, MS Word, MS PowerPoint, or Rich Text files in IBM–PC/Windows 2007 format).

In order to attend this meeting, you must register by close of business Wednesday, May 19, 2010. Because entry to Federal buildings is restricted, all visitors are required to pre-register to be admitted. Please submit your name, time of arrival, e-mail address and phone number to Douglas Hobbs. Mr. Hobbs' e-mail is *doug_hobbs@fws.gov,* and his phone number is (703) 358–2336.

Summary minutes of the conference will be maintained by the Council Coordinator at 4401 N. Fairfax Drive, MS–3103–AEA, Arlington, VA 22203, and will be available for public inspection during regular business hours within 30 days following the meeting. Personal copies may be purchased for the cost of duplication.

Dated: April 20, 2010.

Rowan W. Gould,

Acting Director.

[FR Doc. 2010–9776 Filed 4–27–10; 8:45 am]

BILLING CODE 4310–55–P

DEPARTMENT OF THE INTERIOR

Bureau of Reclamation

Pick-Sloan Missouri Basin Program, Eastern and Western Division Proposed Project Use Power Rate

AGENCY: Bureau of Reclamation, Interior.

ACTION: Reopening of comment period for review of the Pick-Sloan Missouri Basin Program, Eastern and Western Divisions, Proposed Project Use Power Rate Adjustment.

SUMMARY: The Bureau of Reclamation is reopening the comment period for the Pick-Sloan Missouri Basin Program, Eastern and Western Division Proposed Project Use Power Rate Adjustment for an additional 30 days from the date of publication of this Notice. The initial Notice proposing this adjustment was published in the **Federal Register** on January 11, 2010 (75 FR 1408). The public comment period ended on February 10, 2010.

DATES: Written comments on the proposed power rate adjustment will be accepted on or before May 28, 2010.

ADDRESSES: Please send written comments to Mike Ferguson, GP–2020, Power O&M Administrator, P.O. Box 36900, Billings, MT 59107–6900.

All booklets, studies, comments, letters, memoranda, and other documents made or kept by Reclamation for the purpose of developing the proposed rate for Project Use Power will be made available for inspection and copying at the Great Plains Regional Office, located at 316 North 26th Street, Billings, MT 59101.

FOR FURTHER INFORMATION CONTACT: Mike Ferguson, Bureau of Reclamation, Great Plains Regional Office at 406–247–7705 or by e-mail at *mferguson@usbr.gov.*

SUPPLEMENTARY INFORMATION:

Proposed Rate Adjustment

Power rates for the P–SMBP are established pursuant to the Reclamation Act of 1902 (43 U.S.C. 391 *et seq.*), as amended and supplemented by subsequent enactments, particularly section 9(c) of the Reclamation Project Act of 1939 (43 U.S.C. 485h (c)) and the Flood Control Act of 1944 (16 U.S.C. 825s).

Reclamation proposes to:

(a) Increase the energy charge from 12.55 mills/kWh to 16.17 mills/kWh.

(b) the monthly demand charge will remain at zero.

The Project Use Power Rate will be reviewed each time Western Area Power Administration (Western) adjusts the P–SMBP Firm Power Rate.

Dated: April 14, 2010.

Michael J. Ryan,

Regional Director.

[FR Doc. 2010–9805 Filed 4–27–10; 8:45 am]

BILLING CODE 4310–MN–P

INTERNATIONAL TRADE COMMISSION

[Investigation No. 731–TA–1063, 1064, 1066–1068 (Review)]

Frozen Warmwater Shrimp From Brazil, China, India, Thailand, and Vietnam

AGENCY: United States International Trade Commission.

ACTION: Notice of Commission determinations to conduct full five-year reviews concerning the antidumping duty orders on frozen warmwater shrimp from Brazil, China, India, Thailand, and Vietnam.

SUMMARY: The Commission hereby gives notice that it will proceed with full reviews pursuant to section 751(c)(5) of the Tariff Act of 1930 (19 U.S.C. 1675(c)(5)) to determine whether revocation of the antidumping duty orders on frozen warmwater shrimp from Brazil, China, India, Thailand, and Vietnam would be likely to lead to continuation or recurrence of material injury within a reasonably foreseeable time. A schedule for the reviews will be established and announced at a later date. For further information concerning the conduct of these reviews and rules of general application, consult the Commission's Rules of Practice and Procedure, part 201, subparts A through E (19 CFR part 201), and part 207, subparts A, D, E, and F (19 CFR part 207).

DATES: *Effective Date:* April 9, 2010.

FOR FURTHER INFORMATION CONTACT: Mary Messer (202–205–3193), Office of Investigations, U.S. International Trade Commission, 500 E Street, SW., Washington, DC 20436. Hearing-impaired persons can obtain information on this matter by contacting the Commission's TDD terminal on 202–205–1810. Persons with mobility impairments who will need special assistance in gaining access to the Commission should contact the Office of the Secretary at 202–205–2000. General information concerning the Commission may also be obtained by accessing its Internet server (*http://www.usitc.gov*). The public record for these reviews may be viewed on the Commission's electronic docket (EDIS) at *http://edis.usitc.gov.*

SUPPLEMENTARY INFORMATION: On April 9, 2010, the Commission determined that it should proceed to full reviews in the subject five-year reviews pursuant to section 751(c)(5) of the Act. The Commission found that both the domestic and respondent interested party group responses to its notice of institution (75 FR 1078, January 8, 2010) were adequate for each order under review.[1] A record of the Commissioners' votes, the Commission's statement on adequacy, and any individual Commissioner's statements are available from the Office of the Secretary and at the Commission's Web site.

Authority: These reviews are being conducted under authority of title VII of the Tariff Act of 1930; this notice is published pursuant to section 207.62 of the Commission's rules.

Issued: April 22, 2010.

By order of the Commission.

Marilyn R. Abbott,

Secretary to the Commission.

[FR Doc. 2010–9812 Filed 4–27–10; 8:45 am]

BILLING CODE 7020–02–P

DEPARTMENT OF LABOR

Occupational Safety and Health Administration

[Docket No. OSHA–2009–0005]

Avalotis Corp.; Grant of a Permanent Variance

AGENCY: Occupational Safety and Health Administration (OSHA), Department of Labor.

ACTION: Notice of a grant of a permanent variance.

SUMMARY: This notice announces the grant of a permanent variance to Avalotis Corp. ("the employer"). The permanent variance addresses the provision that regulates the tackle used for boatswain's chairs (29 CFR 1926.452(o)(3)), as well as the provisions specified for personnel hoists by paragraphs (c)(1) through (c)(4), (c)(8), (c)(13), (c)(14)(i), and (c)(16) of 29 CFR 1926.552. As an alternative to complying with these provisions, the employer may instead comply with the conditions listed in this grant; these alternative conditions regulate hoisting systems used during inside or outside chimney construction to raise or lower workers in personnel cages, personnel platforms, and boatswain's chairs between the bottom landing of a chimney and an elevated work location. Accordingly, OSHA finds that these alternative conditions protect workers at least as well as the requirements

[1] Commissioner Dean A. Pinkert determined that the respondent interested party response for the review of the order on subject merchandise from Brazil was inadequate but determined to conduct a full review of the order in order to promote administrative efficiency in light of his decision to conduct full reviews with respect to the orders in the other reviews.

specified by 29 CFR 1926.452(o)(3) and 1926.552(c)(1) through (c)(4), (c)(8), (c)(13), (c)(14)(i), and (c)(16). This permanent variance applies in Federal OSHA enforcement jurisdictions, and in those States with OSHA-approved State Plans covering private-sector employers that have identical standards and agree to the terms of the variance.

DATES: The effective date of the permanent variance is April 28, 2010.

FOR FURTHER INFORMATION CONTACT:

General information and press inquiries. For general information and press inquiries about this notice, contact Jennifer Ashley, Director, OSHA Office of Communications, Room N–3647, U.S. Department of Labor, 200 Constitution Avenue, NW., Washington, DC 20210; telephone: (202) 693–1999.

Technical information. For technical information about this notice, contact MaryAnn Garrahan, Director, Office of Technical Programs and Coordination Activities, Room N–3655, OSHA, U.S. Department of Labor, 200 Constitution Avenue, NW., Washington, DC 20210; telephone: (202) 693–2110; fax: (202) 693–1644.

Copies of this **Federal Register** *notice.* Electronic copies of this notice are available at *http://www.regulations.gov.* Electronic copies of this notice, as well as news releases and other relevant information, are available on OSHA's Web site at *http://www.osha.gov.*

SUPPLEMENTARY INFORMATION:

I. Background

In the past 36 years, a number of chimney construction companies demonstrated to OSHA that several personnel hoist requirements (*i.e.,* paragraphs (c)(1), (c)(2), (c)(3), (c)(4), (c)(8), (c)(13), (c)(14)(i), and (c)(16) of 29 CFR 1926.552), as well as the tackle requirements for boatswain's chairs (*i.e.,* paragraph (o)(3) of 29 CFR 1926.452), result in access problems that pose a serious danger to workers. These companies requested permanent variances from these requirements, and proposed alternative equipment and procedures to protect workers while transporting them to and from their elevated worksites during chimney construction and repair. The Agency subsequently granted these companies permanent variances based on the proposed alternatives (*see* 38 FR 8545 (April 3, 1973), 44 FR 51352 (August 31, 1979), 50 FR 20145 (May 14, 1985), 50 FR 40627 (October 4, 1985), 52 FR 22552 (June 12, 1987), 68 FR 52961 (September 8, 2003), 70 FR 72659 (December 6, 2005), 71 FR 10557 (March 1, 2006), 72 FR 6002, 74 FR 34789 (July 17, 2009), and 74 FR 41742 (August 18, 2009)).[1]

Avalotis Corp. ("the employer") applied for a permanent variance from the same personnel hoist- and boatswain's-chair requirements as the previous companies, and proposed as an alternative to these requirements the same equipment and procedures approved by OSHA in the earlier variances. The Agency published the employer's variance applications in the **Federal Register** on November 9, 2009 (74 FR 57704).

The employer constructs, remodels, repairs, maintains, inspects, and demolishes tall chimneys made of reinforced concrete, brick, and steel. This work, which occurs throughout the United States, requires the employers to transport workers and construction material to and from elevated work platforms and scaffolds located, respectively, inside and outside tapered chimneys. While tapering contributes to the stability of a chimney, it necessitates frequent relocation of, and adjustments to, the work platforms and scaffolds so these structures will fit the decreasing circumference of the chimney as construction progresses upwards.

To transport workers to various heights inside and outside a chimney, the employer proposed in its variance application to use a hoist system that lifts and lowers personnel-transport devices that include personnel cages, personnel platforms, or boatswain's chairs. In this regard, the employer proposed to use personnel cages, personnel platforms, or boatswain's chairs solely to transport workers with the tools and materials necessary to do their work, and not to transport only materials or tools on these devices in the absence of workers. In addition, the employer proposed to attach a hopper or concrete bucket to the hoist system to raise or lower material inside or outside a chimney.

The employer also proposed to use a hoist engine, located and controlled outside the chimney, to power the hoist system. The proposed system consisted of a wire rope that: Spools off a winding drum (also known as the hoist drum or rope drum) into the interior of the chimney; passes to a footblock that redirects the rope from the horizontal to the vertical planes; goes from the footblock through the overhead sheaves above the elevated platform; and finally drops to the bottom landing of the chimney where it connects to a personnel- or material-transport device. A cathead, which is a superstructure at the top of the system, supports the overhead sheaves. The overhead sheaves (and the vertical span of the hoist system) move upward with the system as chimney construction progresses. Two guide cables, suspended from the cathead, eliminate swaying and rotation of the load. If the hoist rope breaks, safety clamps activate and grip the guide cables to prevent the load from falling. The employer proposed to use a headache ball, located on the hoist rope directly above the load, to counterbalance the rope's weight between the cathead sheaves and the footblock.

Additional conditions that the employer proposed to follow to improve worker safety included:

- Attaching the wire rope to the personnel cage using a keyed-screwpin shackle or positive-locking link;
- Adding limit switches to the hoist system to prevent overtravel by the personnel- or material-transport devices;
- Providing the safety factors and other precautions required for personnel hoists specified by the pertinent provisions of 29 CFR 1926.552(c), including canopies and shields to protect workers located in a personnel cage from material that may fall during hoisting and other overhead activities;
- Providing falling-object protection for scaffold platforms as specified by 29 CFR 1926.451(h)(1);
- Conducting tests and inspections of the hoist system as required by 29 CFR 1926.20(b)(2) and 1926.552(c)(15);
- Establishing an accident-prevention program that conforms to 29 CFR 1926.20(b)(3);
- Equipping workers who use a personnel cage, personnel platform, or boatswain's chair with, and ensuring that they use, personal fall arrest systems meeting the requirements of 29 CFR 1926.502(d);
- Ensuring that workers using a personnel cage secure their personal fall arrest system to an attachment point located inside the cage, and that workers using personnel platforms or boatswain's chairs secure their personal fall arrest systems to a vertical lifeline;
- When using vertical lifelines, securing the lifelines to the top of the chimney and weighting the lifelines properly, or suitably affixing the lifelines to the bottom of the chimney, and ensuring that workers remain attached to their lifeline during the entire period of vertical transit;

[1] Zurn Industries, Inc. received two permanent variances from OSHA. The first variance, granted on May 14, 1985 (50 FR 20145), addressed the boatswain's-chair provision (then in paragraph (l)(5) of 29 CFR 1926.451), as well as the hoist-platform requirements of paragraphs (c)(1), (c)(2), (c)(3), and (c)(14)(i) of 29 CFR 1926.552. The second variance, granted on June 12, 1987 (52 FR 22552), includes these same paragraphs, as well as paragraphs (c)(4), (c)(8), (c)(13), and (c)(16) of 29 CFR 1926.552.

- Providing instruction to each worker who uses a personnel platform or boatswain's chair regarding the shearing and struck-by hazards posed by the hoist system (*e.g.,* work platforms, scaffolds), and the need to keep their limbs or other body parts clear of these hazards during hoisting operations;
- Providing the instruction on shearing and struck-by hazards before a worker uses one of these personnel-transport devices at the worksite; and periodically, and as necessary thereafter, including whenever the worker demonstrates: a lack of knowledge about the hazard or how to avoid it, a modification occurs to an existing shearing hazard, or a new shearing hazard develops at the worksite;
- Attaching a readily visible warning to each personnel platform and boatswain's chair notifying workers in a language they understand of potential shearing hazards during hoisting operations; for warnings located on personnel platforms, using the following (or equivalent) wording: "Warning—To avoid serious injury, keep your hands, arms, feet, legs, and other parts of your body inside this platform while it is in motion"; and for boatswain's chairs, the warning uses the following (or equivalent) wording: "Warning—To avoid serious injury, do not extend your hands, arms, feet, legs, or other parts of your body from the side or to the front of this chair while it is in motion; and
- Establishing a clearly designated exclusion zone around the hoist system's bottom landing and prohibiting any worker from entering the exclusion zone except to access a personnel cage, personnel platform, boatswain's chair, or material-transport device, and then only when the personnel- and material-transport device is at the bottom landing and not in operation.

II. Proposed Variance From 29 CFR 1926.452(o)(3)

The employer noted in its variance request that it is necessary, on occasion, to use a boatswain's chair to transport workers to and from a bracket scaffold on the outside of an existing chimney during flue installation or repair work, or to transport them to and from an elevated scaffold located inside a chimney that has a tapering diameter. Paragraph (o)(3) of 29 CFR 1926.452, which regulates the tackle used to rig a boatswain's chair, states that this tackle must "consist of correct size ball bearings or bushed blocks containing safety hooks and properly 'eye-spliced' minimum five-eighth (5/8) inch diameter first-grade manila rope [or equivalent rope]."

The primary purpose of this paragraph is to allow a worker to safely control the ascent, descent, and stopping locations of the boatswain's chair. However, the employer stated in its variance request that, because of space limitations, the required tackle is difficult or impossible to operate on some chimneys that are over 200 feet tall. Therefore, as an alternative to complying with the tackle requirements specified by 29 CFR 1926.452(o)(3), the employer proposed to use the hoisting system described above in section I ("Background") of this notice to raise or lower workers in a personnel cage to work locations both inside and outside a chimney. In addition, the employer proposed to use a personnel cage for this purpose to the extent that adequate space is available, and to use a personnel platform only when using a personnel cage was infeasible because of limited space. When available space makes using a personnel platform infeasible, the employer proposed to use a boatswain's chair to lift workers to work locations. The proposed variance limited use of the boatswain's chair to elevations above the last work location that the personnel platform can reach; under these conditions, the employer proposed to attach the boatswain's chair directly to the hoisting cable only when the structural arrangement precludes the safe use of the block and tackle required by 29 CFR 1926.452(o)(3).

III. Proposed Variance From 29 CFR 1926.552(c)

Paragraph (c) of 29 CFR 1926.552 specifies the requirements for enclosed hoisting systems used to transport workers from one elevation to another. This paragraph ensures that employers transport workers safely to and from elevated work platforms by mechanical means during the construction, alteration, repair, maintenance, or demolition of structures such as chimneys. However, this standard does not provide specific safety requirements for hoisting workers to and from elevated work platforms and scaffolds in tapered chimneys; the tapered design requires frequent relocation of, and adjustment to, the work platforms and scaffolds. The space in a tapered chimney is not large enough or configured so that it can accommodate an enclosed hoist tower. Moreover, using an enclosed hoist tower for outside operations exposes workers to additional fall hazards because they need to install extra bridging and bracing to support a walkway between the hoist tower and the tapered chimney.

Paragraph (c)(1) of 29 CFR 1926.552 requires employers to enclose hoist towers located outside a chimney on the side or sides used for entrance to, and exit from, the chimney; these enclosures must extend the full height of the hoist tower. The employer asserted in its proposed variance that it is impractical and hazardous to locate a hoist tower outside tapered chimneys because it becomes increasingly difficult, as a chimney rises, to erect, guy, and brace a hoist tower; under these conditions, access from the hoist tower to the chimney or to the movable scaffolds used in constructing the chimney exposes workers to a serious fall hazard. Additionally, the employer noted that the requirement to extend the enclosures 10 feet above the outside scaffolds often exposes the workers involved in building these extensions to dangerous wind conditions.

Paragraph (c)(2) of 29 CFR 1926.552 requires that employers enclose all four sides of a hoist tower even when the tower is located inside a chimney; the enclosure must extend the full height of the tower. In the proposed variance, the employer contended that it is hazardous for workers to erect and brace a hoist tower inside a chimney, especially tapered chimneys or chimneys with sublevels, because these structures have limited space and cannot accommodate hoist towers; space limitations result from chimney design (*e.g.,* tapering), as well as reinforced steel projecting into the chimney from formwork that is near the work location.

As an alternative to complying with the hoist-tower requirements of 29 CFR 1926.552(c)(1) and (c)(2), the employer proposed to use the hoist system discussed in section I ("Background") of this notice to transport workers to and from work locations inside and outside chimneys. The employer claimed that this hoist system would make it unnecessary for it to comply with other provisions of 29 CFR 1926.552(c) that specify requirements for hoist towers, including:

- (c)(3)—Anchoring the hoist tower to a structure;
- (c)(4)–Hoistway doors or gates;
- (c)(8)—Electrically interlocking entrance doors or gates that prevent hoist movement when the doors or gates are open;
- (c)(13)—Emergency stop switch located in the car;
- (c)(14)(i)—Using a minimum of two wire ropes for drum-type hoisting; and
- (c)(16)—Construction specifications for personnel hoists, including materials assembly, structural integrity, and safety devices.

The employer asserted that the proposed hoisting system protected workers at least as effectively as the personnel-hoist requirements of 29 CFR 1926.552(c).

IV. Comments on the Proposed Variance

OSHA received no comments on the proposed variance, including no comments from State-Plan States and Territories.

V. Multi-State Variance

The variance applications stated that the employers perform chimney work in a number of geographic locations in the United States, some of which could include locations in one or more of the States and Territories that operate OSHA-approved safety and health programs under section 18 of the Occupational Safety and Health Act of 1970 ("State-Plan States and Territories"; *see* 29 U.S.C. 651 *et seq.*). State-Plan States and Territories have primary enforcement responsibility over the work performed in those States and Territories. Under the provisions of 29 CFR 1952.9 ("Variances affecting multi-state employers") and 29 CFR 1905.14(b)(3) ("Actions on applications"), a permanent variance granted by the Agency becomes effective in State-Plan States and Territories as an authoritative interpretation of the applicants' compliance obligation when: (1) The relevant standards are the same as the Federal OSHA standards from which the applicants are seeking the permanent variance; and (2) the State-Plan State or Territory does not object to the terms of the variance application.

As noted in the previous section of this notice (section IV ("Comments on the Proposed Variance")), OSHA received no comments on the variance application published in the **Federal Register** from any State-Plan State or Territory. However, several State-Plan States and Territories commented on earlier variance applications published in the **Federal Register** involving the same standards and submitted by other employers engaged in chimney construction and repair; OSHA is relying on these previous comments to determine the position of these State-Plan States and Territories on the variance applications submitted by the present employers.[2] The remaining paragraphs in this section provide a summary of the positions taken by the State-Plan States and Territories on the proposed alternative conditions.

The following thirteen State-Plan States and one Territory have standards identical to the Federal OSHA standards and agreed to accept the alternative conditions: Alaska, Arizona, Indiana, Maryland, Minnesota, Nevada, New Mexico, North Carolina, Oregon, Puerto Rico, Tennessee, Vermont, Virginia, and Wyoming. Of the remaining 13 States and Territories with OSHA-approved State plans, four of the States and one Territory (Connecticut, Illinois, New Jersey, New York, and the Virgin Islands) cover only public-sector workers and have no authority over the private-sector workers addressed in this variance application (*i.e.,* that authority continues to reside with Federal OSHA).

Four States (Kentucky, Michigan, South Carolina, and Utah) accepted the proposed alternative when specific additional requirements are fulfilled. Kentucky noted that, while it agreed with the terms of the variance, Kentucky statutory law requires affected employers to apply to the State for a State variance. Michigan agreed to the alternative conditions, but noted that its standards are not identical to the OSHA standards covered by the variance application. Therefore, Michigan cautioned that employers electing to use the variance in that State must comply with several provisions in the Michigan standards that are not addressed in the OSHA standard. South Carolina indicated that it would accept the alternative conditions, but noted that, for the grant of such a variance to be accepted by the South Carolina Commissioner of Labor, the employers must file the grant at the Commissioner's office in Columbia, South Carolina. Utah agreed to accept the Federal variance, but requires the employers to contact the Occupational Safety and Health Division, Labor Commission of Utah, regarding a procedural formality that must be completed before implementing the variance in that State.

California, Hawaii, Iowa, and Washington either had different requirements in the affected standards or declined to accept the terms of the variance. Therefore, the employers must apply separately for a permanent variance from these four States.

Based on the responses previously received from State-Plan States and Territories, the permanent Federal OSHA variance will be effective in the following thirteen State-Plan States and one Territory: Alaska, Arizona, Indiana, Maryland, Minnesota, Nevada, New Mexico, North Carolina, Oregon, Puerto Rico, Tennessee, Virginia, Vermont, and Wyoming; and in four additional states, Kentucky, Michigan, South Carolina, and Utah, when the employers meet specific additional requirements. However, this permanent variance does not apply in California, Hawaii, Iowa, and Washington State. As stated earlier, in the four States and one Territory (Connecticut, Illinois, New Jersey, New York, and the Virgin Islands) that have State-Plan programs that cover only public-sector workers, authority over the employers under the permanent variance continues to reside with Federal OSHA.

VI. Decision

Avalotis Corp. seeks a permanent variance from the provision that regulates the tackle used for boatswain's chairs (29 CFR 1926.452(o)(3)), as well as the provisions specified for personnel hoists by paragraphs (c)(1) through (c)(4), (c)(8), (c)(13), (c)(14)(i), and (c)(16) of 29 CFR 1926.552. Paragraph (o)(3) of 29 CFR 1926.452 states that the tackle used for boatswain's chairs must "consist of correct size ball bearings or bushed blocks containing safety hooks and properly 'eye-spliced' minimum five-eighth (⅝) inch diameter first-grade manila rope [or equivalent rope]." The primary purpose of this provision is to allow a worker to safely control the ascent, descent, and stopping locations of the boatswain's chair. The proposed alternative to these requirements allows the employer to use a boatswain's chair to lift workers to work locations inside and outside a chimney when either a personnel cage or a personnel platform is infeasible. The employer proposed to attach the boatswain's chair to the hoisting system described as an alternative to paragraph (c) of 29 CFR 1926.552.

Paragraph (c) of 29 CFR 1926.552 specifies the requirements for enclosed hoisting systems used to transport personnel from one elevation to another. This paragraph ensures that employers transport workers safely to and from elevated work platforms by mechanical means during construction work involving structures such as chimneys. In this regard, paragraph (c)(1) of 29 CFR 1926.552 requires employers to enclose hoist towers located outside a chimney on the side or sides used for entrance to, and exit from, the structure; these enclosures must extend the full height of the hoist tower. Under the requirements of paragraph (c)(2) of 29 CFR 1926.552, employers must enclose all four sides of a hoist tower located inside a chimney; these enclosures also must extend the full height of the tower.

[2] *See* 68 FR 52961 (Oak Park Chimney Corp. and American Boiler & Chimney Co.), 70 FR 72659 (International Chimney Corporation, Karrena International, LLC, and Matrix Service Industrial Contractors, Inc.), and 71 FR 10557 (Commonwealth Dynamics, Inc., Mid-Atlantic Boiler & Chimney, Inc., and R and P Industrial Chimney Co., Inc.).

As an alternative to complying with the hoist-tower requirements of 29 CFR 1926.552(c)(1) and (c)(2), the employer proposed to use a hoist system to transport workers to and from elevated work locations inside and outside chimneys. The proposed hoist system includes a hoist machine, cage, safety cables, and safety measures such as limit switches to prevent overrun of the cage at the top and bottom landings, and safety clamps that grip the safety cables if the main hoist line fails. To transport workers to and from elevated work locations, the employer proposed to attach a personnel cage to the hoist system. However, when the employer can demonstrate that adequate space is not available for the cage, it may use a personnel platform above the last worksite that the cage can reach. Further, when the employer shows that space limitations make it infeasible to use a work platform for transporting workers, it may use a boatswain's chair above the last worksite serviced by the personnel platform. Using the hoist system as an alternative to the hoist-tower requirements of 29 CFR 1926.552(c)(1) and (c)(2) eliminates the need to comply with the other provisions of 29 CFR 1926.552(c) that specify requirements for hoist towers. Accordingly, the employer requested a permanent variance from these and related provisions (*i.e.,* paragraphs (c)(3), (c)(4), (c)(8), (c)(13), (c)(14)(i), and (c)(16)).

Under section 6(d) of the Occupational Safety and Health Act of 1970 (29 U.S.C. 655), and based on the record discussed above, the Agency finds that when the employer complies with the conditions of the following order, the working conditions of the employer's workers will be at least as safe and healthful as if the employers complied with the working conditions specified by paragraph (o)(3) of 29 CFR 1926.452, and paragraphs (c)(1) through (c)(4), (c)(8), (c)(13), (c)(14)(i), and (c)(16) of 29 CFR 1926.552. This decision is applicable in all States under Federal OSHA enforcement jurisdiction, and in the 13 State-Plan States and one Territory with standards identical to the Federal standards (Alaska, Arizona, Indiana, Maryland, Minnesota, Nevada, New Mexico, North Carolina, Oregon, Puerto Rico, Tennessee, Virginia, Vermont, and Wyoming). In Kentucky, Michigan, South Carolina and Utah, the employers must meet additional conditions before this variance will apply in those States. This decision does not apply in California, Hawaii, Iowa, and Washington.

VII. Order

OSHA issues this order authorizing Avalotis Corp. ("the employer") to comply with the following conditions instead of complying with paragraph (o)(3) of 29 CFR 1926.452 and paragraphs (c)(1) through (c)(4), (c)(8), (c)(13), (c)(14)(i), and (c)(16) of 29 CFR 1926.552. This order applies in Federal OSHA enforcement jurisdictions, and in those States with OSHA-approved State plans that have identical standards and have agreed to the terms of the variance.

1. Scope of the Permanent Variance

(a) This permanent variance applies only to tapered chimneys when the employer uses a hoist system during inside or outside chimney construction to raise or lower its workers between the bottom landing of a chimney and an elevated work location on the inside or outside surface of the chimney.

(b) When using a hoist system as specified in this permanent variance, the employer must:

(i) Use the personnel cages, personnel platforms, or boatswain's chairs raised and lowered by the hoist system solely to transport workers with the tools and materials necessary to do their work; and

(ii) Attach a hopper or concrete bucket to the hoist system to raise and lower all other materials and tools inside or outside a chimney.

(c) Except for the requirements specified by 29 CFR 1926.452 (o)(3) and 1926.552(c)(1) through (c)(4), (c)(8), (c)(13), (c)(14)(i), and (c)(16), the employer must comply fully with all other applicable provisions of 29 CFR parts 1910 and 1926.

2. Replacing a Personnel Cage With a Personnel Platform or a Boatswain's Chair

(a) *Personnel platform.* When the employer demonstrates that available space makes a personnel cage for transporting workers infeasible, it may replace the personnel cage with a personnel platform when it limits use of the personnel platform to elevations above the last work location that the personnel cage can reach.

(b) *Boatswain's chair.* The employer must:

(i) Before using a boatswain's chair, demonstrate that available space makes it infeasible to use a personnel platform for transporting workers;

(ii) Limit use of a boatswain's chair to elevations above the last work location that the personnel platform can reach; and

(iii) Use a boatswain's chair in accordance with block-and-tackle requirements specified by 29 CFR 1926.452(o)(3), unless the employer can demonstrate that the structural arrangement of the chimney precludes such use.

3. Qualified Competent Person

(a) The employer must:

(i) Provide a qualified competent person, as specified in paragraphs (f) and (m) of 29 CFR 1926.32, who is responsible for ensuring that the design, maintenance, and inspection of the hoist system comply with the conditions of this grant and with the appropriate requirements of 29 CFR part 1926 ("Safety and Health Regulations for Construction"); and

(ii) Ensure that the qualified competent person is present at ground level to assist in an emergency whenever the hoist system is raising or lowering workers.

(b) The employer must use a qualified competent person to design and maintain the cathead described under Condition 8 ("Cathead and Sheave"), below.

4. Hoist Machine

(a) *Type of hoist.* The employer must designate the hoist machine as a portable personnel hoist.

(b) *Raising or lowering a transport.* The employer must ensure that:

(i) The hoist machine includes a base-mounted drum hoist designed to control line speed; and

(ii) Whenever the employer raises or lowers a personnel or material hoist (*e.g.,* a personnel cage, personnel platform, boatswain's chair, hopper, concrete bucket) using the hoist system:

(A) The drive components are engaged continuously when an empty or occupied transport is being lowered (*i.e.,* no "freewheeling");

(B) The drive system is interconnected, on a continuous basis, through a torque converter, mechanical coupling, or an equivalent coupling (*e.g.,* electronic controller, fluid clutches, hydraulic drives).

(C) The braking mechanism is applied automatically when the transmission is in the neutral position and a forward-reverse coupling or shifting transmission is being used; and

(D) No belts are used between the power source and the winding drum.

(c) *Power source.* The employer must power the hoist machine by an air, electric, hydraulic, or internal-combustion drive mechanism.

(d) *Constant-pressure control switch.* The employer must:

(i) Equip the hoist machine with a hand- or foot-operated constant-pressure control switch (*i.e.,* a "deadman control

switch") that stops the hoist immediately upon release; and

(ii) Protect the control switch to prevent it from activating if the hoist machine is struck by a falling or moving object.

(e) *Line-speed indicator.* The employer must:

(i) Equip the hoist machine with an operating line-speed indicator maintained in good working order; and

(ii) Ensure that the line-speed indicator is in clear view of the hoist operator during hoisting operations.

(f) *Braking systems.* The employer must equip the hoist machine with two (2) independent braking systems (*i.e.,* one automatic and one manual) located on the winding side of the clutch or couplings, with each braking system being capable of stopping and holding 150 percent of the maximum rated load.

(g) *Slack-rope switch.* The employer must equip the hoist machine with a slack-rope switch to prevent rotation of the winding drum under slack-rope conditions.

(h) *Frame.* The employer must ensure that the frame of the hoist machine is a self-supporting, rigid, welded-steel structure, and that holding brackets for anchor lines and legs for anchor bolts are integral components of the frame.

(i) *Stability.* The employer must secure hoist machines in position to prevent movement, shifting, or dislodgement.

(j) *Location.* The employer must:

(i) Locate the hoist machine far enough from the footblock to obtain the correct fleet angle for proper spooling of the cable on the drum; and

(ii) Ensure that the fleet angle remains between one-half degree (½°) and one and one-half degrees (1½°) for smooth drums, and between one-half degree (½°) and two degrees (2°) for grooved drums, with the lead sheave centered on the drum.[3]

(k) *Drum and flange diameter.* The employer must:

(i) Provide a winding drum for the hoist that is at least 30 times the diameter of the rope used for hoisting; and

(ii) Ensure that the winding drum has a flange diameter that is at least one and one-half (1½) times the winding-drum diameter.

(l) *Spooling of the rope.* The employer must *never* spool the rope closer than two (2) inches (5.1 cm) from the outer edge of the winding-drum flange.

(m) *Electrical system.* The employer must ensure that all electrical equipment is weatherproof.

(n) *Limit switches.* The employer must equip the hoist system with limit switches and related equipment that automatically prevent overtravel of a personnel cage, personnel platform, boatswain's chair, or material-transport device at the top of the supporting structure and at the bottom of the hoistway or lowest landing level.

5. Methods of Operation

(a) *Employee qualifications and training.* The employer must:

(i) Ensure that only trained and experienced workers, who are knowledgeable of hoist-system operations, control the hoist machine; and

(ii) Provide instruction, periodically, and as necessary, on how to operate the hoist system, to each worker who uses a personnel cage for transportation.

(b) *Speed limitations.* The employer must *not* operate the hoist at a speed in excess of:

(i) Two hundred and fifty (250) feet (76.9 m) per minute when a personnel cage is being used to transport workers;

(ii) One hundred (100) feet (30.5 m) per minute when a personnel platform or boatswain's chair is being used to transport workers; or

(iii) A line speed that is consistent with the design limitations of the system when only material is being hoisted.

(c) *Communication.* The employer must:

(i) Use a voice-mediated intercommunication system to maintain communication between the hoist operator and the workers located in or on a moving personnel cage, personnel platform, or boatswain's chair;

(ii) Stop hoisting if, for any reason, the communication system fails to operate effectively; and

(iii) Resume hoisting only when the site superintendent determines that it is safe to do so.

6. Hoist Rope

(a) *Grade.* The employer must use a wire rope for the hoist system (*i.e.,* "hoist rope") that consists of extra-improved plow steel, an equivalent grade of non-rotating rope, or a regular lay rope with a suitable swivel mechanism.

(b) *Safety factor.* The employer must maintain a safety factor of at least eight (8) times the safe workload throughout the entire length of hoist rope.

(c) *Size.* The employer must use a hoist rope that is at least one-half (½) inch (1.3 cm) in diameter.

(d) *Inspection, removal, and replacement.* The employer must:

(i) Thoroughly inspect the hoist rope before the start of each job and on completing a new setup;

(ii) Maintain the proper diameter-to-diameter ratios between the hoist rope and the footblock and the sheave by inspecting the wire rope regularly (*see* Conditions 7(c) and 8(d), below); and

(iii) Remove and replace the wire rope with new wire rope when any of the conditions specified by 29 CFR 1926.552(a)(3) occurs.

(e) *Attachments.* The employer must attach the rope to a personnel cage, personnel platform, or boatswain's chair with a keyed-screwpin shackle or positive-locking link.

(f) *Wire-rope fastenings.* When the employer uses clip fastenings (*e.g.,* U-bolt wire-rope clips) with wire ropes, it must:

(i) Use Table H–20 of 29 CFR 1926.251 to determine the number and spacing of clips;

(ii) Use at least three (3) drop-forged clips at each fastening;

(iii) Install the clips with the "U" of the clips on the dead end of the rope; and

(iv) Space the clips so that the distance between them is six (6) times the diameter of the rope.

7. Footblock

(a) *Type of block.* The employer must use a footblock:

(i) Consisting of construction-type blocks of solid single-piece bail with a safety factor that is at least four (4) times the safe workload, or an equivalent block with roller bearings;

(ii) Designed for the applied loading, size, and type of wire rope used for hoisting;

(iii) Designed with a guard that contains the wire rope within the sheave groove;

(iv) Bolted rigidly to the base; and

(v) Designed and installed so that it turns the moving wire rope to and from the horizontal or vertical direction as required by the direction of rope travel.

(b) *Directional change.* The employer must ensure that the angle of change in the hoist rope from the horizontal to the vertical direction at the footblock is approximately 90°.

(c) *Diameter.* The employer must ensure that the line diameter of the footblock is at least 24 times the diameter of the hoist rope.

8. Cathead and Sheave

(a) *Support.* The employer must use a cathead (*i.e.,* "overhead support") that

[3] This variance adopts the definition of, and specifications for, fleet angle from *Cranes and Derricks,* H. I. Shapiro, *et al.* (eds.); New York: McGraw-Hill; 3rd ed., 1999, page 592. Accordingly, the fleet angle is "[t]he angle the rope leading onto a [winding] drum makes with the line perpendicular to the drum rotating axis when the lead rope is making a wrap against the flange."

consists of a wide-flange beam, or two (2) steel-channel sections securely bolted back-to-back to prevent spreading.

(b) *Installation.* The employer must ensure that:

(i) All sheaves revolve on shafts that rotate on bearings; and

(ii) The bearings are mounted securely to maintain the proper bearing position at all times.

(c) *Rope guides.* The employer must provide each sheave with appropriate rope guides to prevent the hoist rope from leaving the sheave grooves when the rope vibrates or swings abnormally.

(d) *Diameter.* The employer must use a sheave with a diameter that is at least 24 times the diameter of the hoist rope.

9. Guide Ropes

(a) *Number and construction.* The employer must affix two (2) guide ropes by swivels to the cathead. The guide ropes must:

(i) Consist of steel safety cables not less than one-half (½) inch (1.3 cm) in diameter; and

(ii) Be free of damage or defects at all times.

(b) *Guide rope fastening and alignment tension.* The employer must fasten one end of each guide rope securely to the overhead support, with appropriate tension applied at the foundation.

(c) *Height.* The employer must rig the guide ropes along the entire height of the hoist-machine structure.

10. Personnel Cage

(a) *Construction.* A personnel cage must be of steel-frame construction and capable of supporting a load that is four (4) times its maximum rated load capacity. The employer also must ensure that the personnel cage has:

(i) A top and sides that are permanently enclosed (except for the entrance and exit);

(ii) A floor securely fastened in place;

(iii) Walls that consist of 14-gauge, one-half (½) inch (1.3 cm) expanded metal mesh, or an equivalent material;

(iv) Walls that cover the full height of the personnel cage between the floor and the overhead covering;

(v) A sloped roof constructed of one-eighth (⅛) inch (0.3 cm) aluminum, or an equivalent material;

(vi) Safe handholds (*e.g.,* rope grips—but *not* rails or hard protrusions [4]) that accommodate each occupant; and

(vii) Attachment points to which workers secure their personal fall protection systems.

[4] To reduce impact hazards should workers lose their balance because of cage movement.

(b) *Overhead weight.* A personnel cage must have an overhead weight (*e.g.,* a headache ball of appropriate weight) to compensate for the weight of the hoist rope between the cathead and the footblock. In addition, the employer must:

(i) Ensure that the overhead weight is capable of preventing line run; and

(ii) Use a means to restrain the movement of the overhead weight so that the weight does *not* interfere with safe personnel hoisting.

(c) *Gate.* The personnel cage must have a gate that:

(i) Guards the full height of the entrance opening; and

(ii) Has a functioning mechanical lock that prevents accidental opening.

(d) *Operating procedures.* The employer must post the procedures for operating the personnel cage conspicuously at the hoist operator's station.

(e) *Capacity.* The employer must:

(i) Hoist no more than four (4) occupants in the cage at any one time; and

(ii) Ensure that the rated load capacity of the cage is at least 250 pounds (113.4 kg) for each occupant so hoisted.

(f) *Worker notification.* The employer must post a sign in each personnel cage notifying workers of the following conditions:

(i) The standard rated load, as determined by the initial static drop test specified by Condition 10(g) ("Static drop tests"), below; and

(ii) The reduced rated load for the specific job.

(g) *Static drop tests.* The employer must:

(i) Conduct static drop tests of each personnel cage that comply with the definition of "static drop test" specified by section 3 ("Definitions") and the static drop test procedures provided in section 13 ("Inspections and Tests") of American National Standards Institute (ANSI) standard A10.22–1990 (R1998) ("American National Standard for Rope-Guided and Non-guided Worker's Hoists—Safety Requirements");

(ii) Perform the initial static drop test at 125 percent of the maximum rated load of the personnel cage, and subsequent drop tests at no less than 100 percent of its maximum rated load; and

(iii) Use a personnel cage for raising or lowering workers only when no damage occurred to the components of the cage as a result of the static drop tests.

11. Safety Clamps

(a) *Fit to the guide ropes.* The employer must:

(i) Fit appropriately designed and constructed safety clamps to the guide ropes; and

(ii) Ensure that the safety clamps do not damage the guide ropes when in use.

(b) *Attach to the personnel cage.* The employer must attach safety clamps to each personnel cage for gripping the guide ropes.

(c) *Operation.* The safety clamps attached to the personnel cage must:

(i) Operate on the "broken rope principle" defined in section 3 ("Definitions") of ANSI standard A10.22–1990 (R1998);

(ii) Be capable of stopping and holding a personnel cage that is carrying 100 percent of its maximum rated load and traveling at its maximum allowable speed if the hoist rope breaks at the footblock; and

(iii) Use a pre-determined and pre-set clamping force (*i.e.,* the "spring compression force") for each hoist system.

(d) *Maintenance.* The employer must keep the safety clamp assemblies clean and functional at all times.

12. Overhead Protection

(a) The employer must install a canopy or shield over the top of the personnel cage that is made of steel plate at least three-sixteenths (3/16) of an inch (4.763 mm) thick, or material of equivalent strength and impact resistance, to protect workers (*i.e.,* both inside and outside the chimney) from material and debris that may fall from above.

(b) The employer must ensure that the canopy or shield slopes to the outside of the personnel cage.[5]

13. Emergency-Escape Device

(a) *Location.* The employer must provide an emergency-escape device in at least one of the following locations:

(i) In the personnel cage, provided that the device is long enough to reach the bottom landing from the highest possible escape point; or

(ii) At the bottom landing, provided that a means is available in the personnel cage for the occupants to raise the device to the highest possible escape point.

(b) *Operating instructions.* The employer must ensure that written instructions for operating the emergency-escape device are attached to the device.

(c) *Training.* The employer must instruct each worker who uses a

[5] Paragraphs (a) and (b) were adapted from OSHA's Underground Construction standard (29 CFR 1926.800(t)(4)(iv)).

personnel cage for transportation on how to operate the emergency-escape device:

(i) Before the worker uses a personnel cage for transportation; and

(ii) Periodically, and as necessary, thereafter.

14. Personnel Platforms

(a) *Personnel platforms.* When the employer elects to replace the personnel cage with a personnel platform in accordance with Condition 2(a) of this variance, it must:

(i) Ensure that an enclosure surrounds the platform, and that this enclosure is at least 42 inches (106.7 cm) above the platform's floor;

(ii) Provide overhead protection when an overhead hazard is, or could be, present; and

(iii) Comply with the applicable scaffolding strength requirements specified by 29 CFR 1926.451(a)(1).

15. Protecting Workers From Fall and Shearing Hazards

(a) *Fall hazards.* The employer must:

(i) Before workers use personnel cages, personnel platforms, or boatswain's chairs, equip the workers with, and ensure that they use, personal fall arrest systems that meet the requirements of 29 CFR 1926.502(d);

(ii) Ensure that workers using personnel cages secure their fall arrest systems to attachment points located inside the cage;

(iii) Ensure that workers using personnel platforms and boatswain's chairs secure their personal fall arrest systems to a vertical lifeline; and

(iv) When using vertical lifelines:

(A) Secure the lifelines to the top of the chimney;

(B) Weight the lifelines properly, or suitably affix the lifelines to the bottom of the chimney; and

(C) Ensure that workers remain attached to their lifeline during the *entire* period of vertical transit.

(b) *Shearing hazards.* The employer must:

(i) Provide workers who use personnel platforms or boatswain's chairs with instruction on the shearing hazards posed by the hoist system (*e.g.,* work platforms, scaffolds), and the need to keep their limbs or other body parts clear of these hazards during hoisting operations;

(ii) Provide the instruction on shearing and struck-by hazards:

(A) Before a worker uses a personnel platform or boatswain's chair at the worksite; and

(B) Periodically, and as necessary, thereafter, including whenever a worker demonstrates a lack of knowledge about the hazards or how to avoid the hazards, a modification occurs to an existing shearing or struck-by hazard, or a new shearing or struck-by hazard develops at the worksite; and

(iii) Attach a readily visible warning to each personnel platform and boatswain's chair notifying workers in a language they understand of potential shearing hazards they may encounter during hoisting operations, and that uses the following (or equivalent) wording:

(A) For personnel platforms: "Warning—To avoid serious injury, keep your hands, arms, feet, legs, and other parts of your body inside this platform while it is in motion"; and

(B) For boatswain's chairs: "Warning—To avoid serious injury, do not extend your hands, arms, feet, legs, or other parts your body from the side or to the front of this chair while it is in motion."

16. Exclusion Zone

The employer must:

(a) Establish a clearly designated exclusion zone around the bottom landing of the hoist system; and

(b) Prohibit any worker from entering the exclusion zone except to access a personnel- or material-transport device, and then only when the device is at the bottom landing and not in operation (*i.e.,* when the drive components of the hoist machine are disengaged and the braking mechanism is properly applied).

17. Inspections, Tests, and Accident Prevention

(a) The employer must:

(i) Conduct inspections of the hoist system as required by 29 CFR 1926.20(b)(2);

(ii) Ensure that a competent person conducts daily visual inspections of the hoist system; and

(iii) Inspect and test the hoist system as specified by 29 CFR 1926.552(c)(15).

(b) The employer must comply with the accident-prevention requirements of 29 CFR 1926.20(b)(3).

18. Welding

(a) The employer must use only qualified welders to weld components of the hoisting system.

(b) The employer must ensure that the qualified welders:

(i) Are familiar with the weld grades, types, and materials specified in the design of the system; and

(ii) Perform the welding tasks in accordance with 29 CFR 1926, subpart J ("Welding and Cutting").

19. OSHA Notification

(a) At least 15 calendar days prior to commencing any chimney construction operation using the conditions specified herein, the employer must notify the OSHA Area Office nearest to the worksite, or the appropriate State Plan Office, of the operation, including the location of the operation and the date that the operation will commence.

(b) The employer must inform OSHA national headquarters as soon as it has knowledge that it will:

(i) Cease to do business; or

(ii) Transfer the activities covered by this permanent variance to a successor company.

VIII. Authority and Signature

David Michaels, PhD, MPH, Assistant Secretary of Labor for Occupational Safety and Health, U.S. Department of Labor, 200 Constitution Ave., NW., Washington, DC, directed the preparation of this notice. OSHA is issuing this notice under the authority specified by Section 6(d) of the Occupational Safety and Health Act of 1970 (29 U.S.C. 655), Secretary of Labor's Order No. 5–2007 (72 FR 31160), and 29 CFR part 1905.

Signed at Washington, DC, on April 22, 2010.

David Michaels,

Assistant Secretary of Labor for Occupational Safety and Health.

[FR Doc. 2010–9785 Filed 4–27–10; 8:45 am]

BILLING CODE 4510–26–P

THE NATIONAL FOUNDATION ON THE ARTS AND THE HUMANITIES

Federal Council on the Arts and the Humanities; Arts and Artifacts Indemnity Panel Advisory Committee

AGENCY: The National Endowment for the Humanities.

ACTION: Notice of Meeting.

Pursuant to the provisions of the Federal Advisory Committee Act (Pub. L. 92–463 as amended) notice is hereby given that a meeting of the Arts and Artifacts Indemnity Panel of the Federal Council on the Arts and the Humanities will be held at 1100 Pennsylvania Avenue, NW., Washington, DC 20506, in Room 730, from 9:30 a.m. to 5 p.m., on Thursday, May 13, 2010.

The purpose of the meeting is to review applications for Certificates of Indemnity submitted to the Federal Council on the Arts and the Humanities for exhibitions beginning after July 1, 2010.

Because the proposed meeting will consider financial and commercial data and because it is important to keep values of objects, methods of transportation and security measures

confidential, pursuant to the authority granted me by the Chairman's Delegation of Authority to Close Advisory Committee Meetings, dated July 19, 1993, I have determined that the meeting would fall within exemption (4) of 5 U.S.C. 552(b) and that it is essential to close the meeting to protect the free exchange of views and to avoid interference with the operations of the Committee.

It is suggested that those desiring more specific information contact Advisory Committee Management Officer, Michael P. McDonald, 1100 Pennsylvania Avenue, NW., Washington, DC 20506, or call 202/606–8322.

Michael P. McDonald,

Advisory Committee Management Officer.

[FR Doc. 2010–9768 Filed 4–27–10; 8:45 am]

BILLING CODE 7536–01–P

NATIONAL SCIENCE FOUNDATION

National Science Board

Sunshine Act Meetings; Notice

The National Science Board, pursuant to NSF regulations (45 CFR Part 614), the National Science Foundation Act, as amended (42 U.S.C. 1862n–5), and the Government in the Sunshine Act (5 U.S.C. 552b), hereby gives notice in regard to the scheduling of meetings for the transaction of National Science Board business and other matters specified, as follows:

AGENCY HOLDING MEETING: National Science Board.

DATE AND TIME: Tuesday, May 4, 2010, at 7:30 a.m.; and Wednesday, May 5, 2010 at 7:30 a.m.

PLACE: National Science Foundation, 4201 Wilson Blvd., Rooms 1235 and 1295, Arlington, VA 22230. All visitors must report to the NSF visitor desk at the 9th and N. Stuart Streets entrance to receive a visitor's badge. Public visitors must arrange for a visitor's badge in advance. Call 703–292–7000 or e-mail *NationalScienceBrd@nsf.gov* and leave your name and place of business to request your badge, which will be ready for pick-up at the visitor's desk on the day of the meeting.

STATUS: Some portions open, some portions closed.

Open Sessions

May 4, 2010

7:30 a.m.–7:35 a.m.
7:35 a.m.–9 a.m.
11:30 a.m.–12 p.m.
1 p.m.–3 p.m.
2 p.m.–3:30 p.m.
3 p.m.–3:15 p.m.
3:15 p.m.–3:30 p.m.
3:30 p.m.–4 p.m.

May 5, 2010

7:30 a.m.–8:30 a.m.
7:30 a.m.–9 a.m.
8:30 a.m.–9:30 a.m.
9:30 a.m.–10:30 a.m.
10:30 a.m.–11:30 a.m.
1:45 p.m.–3:35 p.m.

Closed Sessions

May 4, 2010

9 a.m.–11:30 a.m.
1 p.m.–2 p.m.

May 5, 2010

9 a.m.–9:30 a.m.
11:30 a.m.–12 p.m.
1 p.m.–1:45 p.m.

AGENCY CONTACT: Kim Silverman, *ksilverm@nsf.gov,* (703) 292–7000, *http://www.nsf.gov/nsb/.*

Matters To Be Discussed

Tuesday, May 4, 2010

Chairman's Introduction

Open Session: 7:30 a.m.–7:35 a.m., Room 1235

- Chairman's Remarks.

Committee on Programs and Plans (CPP)

Open Session: 7:35 a.m.–9 a.m., Room 1235

- Approval of February 2010 Minutes.
- Committee Chairman's Remarks.
- Subcommittee on Polar Issues (SOPI):
  - SOPI Chairman's Remarks.
  - Director's Report—Office of Polar Programs (OPP).
  - U.S. Antarctic Program Review.
  - International State of the Arctic Meeting.
- *Discussion Item:* Review of NSB Policy on Award Thresholds requiring NSB approval.
- *CPP Task Force on Support of Mid-Scale and Multi-Investigator Research:* Status Report.
- *NSB Information Item:* iPlant.
- *NSB Information Item:* DataNet.

Closed Session: 9 a.m.–11:30 a.m., Room 1235

- Committee Chairman's Remarks.
- *NSB Information Item:* DUSEL—Update.
- *NSB Action Item:* Academic Research Infrastructure Recovery and Reinvestment Program (ARI–R²).
- *NSB Action Item:* NCAR Supercomputing Center Construction Project.
- *NSB Action Item:* Approval of MREFC Construction Award for the National Ecological Observatory Network (NEON).

Plenary Open

Open Session: 11:30 a.m.–12 p.m., Room 1235

- Presentation by Honorary Awards Recipient:
  - NSB Public Service Award–individual, Dr. Nalini Nadkarni.

Committee on Audit and Oversight (A&O)

Open Session: 1 p.m.–3 p.m., Room 1235

- Approval of Minutes, February 3, 2010.
- Committee Chairman's Opening Remarks.
- Human Resources Update.
- Chief Financial Officer's Update.
  OIG Semiannual Report.
- Management Response to OIG Semiannual Report.
- Inspector General's ARRA Update.
- 2010 Financial Statement Audit.
- Future NSF Update.
- Report to the Board on the NSF Merit Review Process, FY 2009.
- Review of NSB Policy on Award Thresholds Requiring NSB Approval.
- Committee Chairman's Closing Remarks.

Committee on Programs and Plans (CPP)

Closed Session: 1 p.m.–2 p.m., Room 1295

- *NSB Action Item:* Support for nine FY 2010 Research Infrastructure Improvement Program (RII) Track-1 proposed awards from the Experimental Program to Stimulate Competitive Research.

Committee on Strategy and Budget (CSB)

Open Session: 2 p.m.–3:30 p.m., Room 1295

Subcommittee on Facilities (SCF).

- Approval of SCF Teleconference Minutes, January 2010.
- Approval of SCF Teleconference Minutes, March 2010.
- Approval of SCF Teleconference Minutes, April 2010.
- SCF Chairman's Remarks.
- Overview of the Draft Report of the *NSF Facilities Portfolio Review.*
- Discussion of the Draft *NSF Facilities Portfolio Review.*
- Next Steps for Final Report.

Task Force on the NSB 60th Anniversary

Open Session: 3 p.m.–3:15 p.m., Room 1235

- Approval of Minutes, February 3, 2010.
- Task Force Chairman's Remarks.
- Updates on NSB/NSF Anniversary Activities.
  - OLPA Activities including Sensational 60.
  - NSF 60th Anniversary Working Group Activities.

Executive Committee (EC)

Open Session: 3:15 p.m.–3:30 p.m., Room 1235

- Approval of February 2010 Minutes.
- Approval of the Executive Committee Annual Report.
- Executive Committee Chairman's Remarks.
- Updates or New Business from Committee Members.

Plenary Open

Open Session: 3:30 p.m.–4 p.m., Room 1235

- Presentation by Honorary Awards Recipient:
  - Vannevar Bush Award, Dr. Bruce Alberts.

Wednesday, May 5, 2010

Committee on Education and Human Resources (CEH)

Open Session: 7:30 a.m.–8:30 a.m., Room 1235

- Approval of February 2010 Minutes.
- Next Generation of STEM Innovators White Paper.
- A Comprehensive Broadening Participation in Undergraduate STEM Program.
  - Synopsis of Proposed Program.
  - Discussion.
- Other Committee Business.

Committee on Strategy and Budget (CSB)

Open Session: 7:30 a.m.–9 a.m., Room 1295

- Approval of CSB Meeting Minutes from February 3 and 4, 2010.
- Chairman's Remarks.
- CSB Data Policies Task Force.
- FY 2011 Budget Request Update.
- ARRA Update.
- Strategic Plan Update.
- NSB Budget.
- Other Committee Business.

Closed Session: 9 a.m.–9:30 a.m., Room 1295

- FY 2012 Request Planning.
- Other Committee Business.

Task Force on Merit Review (MR)

Open Session: 8:30 a.m.–9:30 a.m., Room 1235

- Task Force Chairman's Remarks.
- Approval of Minutes from March 25, 2010 Teleconference.
- Approval of Task Force Charge and Work Plan.
- *Next Steps:* Identifying sources and types of data to consider and specific expertise needed.

Committee on Science and Engineering Indicators (SEI)

Open Session: 9:30 a.m.–10:30 a.m., Room 1235

- Approval of February Minutes.
- Chairman's Remarks.
- Report on Rollout of *Indicators 2010* and Press Coverage.
- Expert Input on Measuring Scientific Knowledge and Understanding for Consideration in Future *Science and Engineering Indicators* Reports.
- Indicators Education Tool.
- Chairman's Summary.

Plenary Open

Open Session: 10:30 a.m.–11:30 a.m., Room 1235

- Presentation by Honorary Awards Recipients:
  - Waterman Award, Dr. Subhash Khot.
  - NSB Public Service Award—group, The Expanding Your Horizons Network.

Plenary Executive Closed

Closed Session: 11:30 a.m.–12 p.m., Room 1235

- Approval of Plenary Executive Closed Minutes, February 2010.
- Election for NSB Chairman and Vice Chairman.

Plenary Closed

Closed Session: 1 p.m.–1:45 p.m., Room 1235

- Approval of Plenary Closed Minutes, February 2010.
- Awards and Agreements—Committee on Programs and Plans Presentations.
- Closed Committee Reports.

Plenary Open

Open Session: 1:45 p.m.–3:45 p.m., Room 1235

- Recognition of the Class of 2010 and Executive Secretaries.
- Approval of Open Session Minutes, February 2010.
- Closed Session Items for August 2010 Meeting.
- Chairman's Report.
- Director's Report.
- Open Committee Reports.

Ann Ferrante,

Technical Writer/Editor.

[FR Doc. 2010–10022 Filed 4–26–10; 4:15 pm]

BILLING CODE 7555–01–P

NATIONAL SCIENCE FOUNDATION

Notice of Permit Applications Received Under the Antarctic Conservation Act of 1978 (Pub. L. 95–541)

AGENCY: National Science Foundation.

ACTION: Notice of Permit Applications Received under the Antarctic Conservation Act of 1978, Public Law 95–541.

SUMMARY: The National Science Foundation (NSF) is required to publish notice of permit applications received to conduct activities regulated under the Antarctic Conservation Act of 1978. NSF has published regulations under the Antarctic Conservation Act at title 45 part 670 of the Code of Federal Regulations. This is the required notice of permit applications received.

DATES: Interested parties are invited to submit written data, comments, or views with respect to this permit application by May 28, 2010. This application may be inspected by interested parties at the Permit Office, address below.

ADDRESSES: Comments should be addressed to Permit Office, Room 755, Office of Polar Programs, National Science Foundation, 4201 Wilson Boulevard, Arlington, Virginia 22230.

FOR FURTHER INFORMATION CONTACT: Nadene G. Kennedy at the above address or (703) 292–7405.

SUPPLEMENTARY INFORMATION: The National Science Foundation, as directed by the Antarctic Conservation Act of 1978 (Pub.L. 95–541), as amended by the Antarctic Science, Tourism and Conservation Act of 1996, has developed regulations for the establishment of a permit system for various activities in Antarctica and designation of certain animals and certain geographic areas a requiring special protection. The regulations establish such a permit system to designate Antarctic Specially Protected Areas.

The applications received are as follows:

1. *Applicant:* David Ainley, H.T. Harvey & Associates, 983 University Avenue, Bldg. D, Los Gatos, CA 95032.

Permit Application No. 2011–002.

Activity for Which Permit is Requested: Take and Enter Antarctic

Specially Protected Areas (ASPA). The applicant plans to Cape Crozier (ASPA 124), Cape Royds (ASPA 121), Cape Bird, and Beaufort Island (ASPA 105) to study penguins and the effect of age, experience and physiology on individual foraging efficiency and breeding performance, and develop a comprehensive population model for the Ross-Beaufort metapopulations incorporating all factors investigated. The applicant plans to band up to 1800 fledgling Adelie chicks, apply TDR's to 45 adult Adelies, which will be removed later, and blood samples taken. Up to 400 Adelie chicks will be weighed, 300 adults will have PIT tags implanted, and up to 1500 nests will be marked. In addition, a tower will be erected to support a remote camera at Cape Royds, two weigh-bridges will be set up at Cape Crozier, and two in-ground PIT-tag antennas will be set up at Cape Royds.

Location: Cape Crozier (ASPA 124), Cape Royds (ASPA 121), Cape Bird, and Beaufort Island (ASPA 105).

Dates: September 1, 2010 to August 31, 2015.

Nadene G. Kennedy,

Permit Officer, Office of Polar Programs.

[FR Doc. 2010–9780 Filed 4–27–10; 8:45 am]

BILLING CODE 7555–01–P

NUCLEAR REGULATORY COMMISSION

[NRC–2010–0165]

Exelon Nuclear Texas Holdings, LLC; Notice of Receipt and Availability of Application for an Early Site Permit

On March 25, 2010, Exelon Nuclear Texas Holdings, LLC filed with the U.S. Nuclear Regulatory Commission (NRC, the Commission) pursuant to section 103 of the Atomic Energy Act and Title 10 of the *Code of Federal Regulations* (10 CFR) part 52, "Licenses, Certifications, and Approvals for Nuclear Power Plants," an application for an early site permit (ESP) for the Victoria County Station Site (VCS) located in Victoria County, Texas.

An applicant may seek an ESP in accordance with Subpart A of 10 CFR part 52 separate from the filing of an application for a construction permit (CP) or combined license (COL) for a nuclear power facility. The ESP process allows resolution of issues relating to siting. At any time during the period of an ESP (up to 20 years), the permit holder may reference the permit in an application for a CP or COL.

Subsequent **Federal Register** notices will address the acceptability of the tendered ESP application for docketing and provisions for participation of the public in the ESP review process.

A copy of the application is available for public inspection at the Commission's Public Document Room (PDR), located at One White Flint North, Public File Area O1 F21, 11555 Rockville Pike (First Floor), Rockville, Maryland, and via the Agencywide Documents Access and Management System (ADAMS) Public Electronic Reading Room on the Internet at the NRC Web site, *http://www.nrc.gov/reading-rm/adams.html.* The ADAMS accession number is ML101110201. Future publicly available documents related to the application will also be posted in ADAMS. Persons who do not have access to ADAMS, or who encounter problems in accessing the documents located in ADAMS, should contact the NRC PDR staff by telephone at 1–800–397–4209 or 301–415–4737, or by e-mail to *pdr@nrc.gov.* The application is also available at *http://www.nrc.gov/reactors/new-reactors/esp.html.*

Dated at Rockville, Maryland, this 21st day of April 2010.

For the Nuclear Regulatory Commission.

Janelle B. Jessie,

Project Manager, ESBWR/ABWR Projects Branch 1, Division of New Reactor Licensing, Office of New Reactor.

[FR Doc. 2010–9821 Filed 4–27–10; 8:45 am]

BILLING CODE 7590–01–P

POSTAL SERVICE

Board of Governors; Sunshine Act Meeting

DATES AND TIMES: Wednesday, May 5, 2010, at 10 a.m.; Thursday, May 6, at 8:30 a.m. and 10:30 a.m.

PLACE: Washington, DC, at U.S. Postal Service Headquarters, 475 L'Enfant Plaza, SW., in the Benjamin Franklin Room.

STATUS: May 5 at 10 a.m.—Closed; Thursday, May 6 at 8:30 a.m.—Open; and 10:30 a.m.—Closed.

MATTERS TO BE CONSIDERED:

Wednesday, May 5 at 10 a.m. (Closed)

1. Strategic Issues.
2. Financial Matters.
3. Pricing.
4. Personnel Matters and Compensation Issues.
5. Governors' Executive Session—Discussion of prior agenda items and Board Governance.

Thursday, May 6 at 8:30 a.m. (Open)

1. Approval of Minutes of Previous Meetings.
2. Remarks of the Chairman of the Board.
3. Remarks of the Postmaster General and CEO.
4. Committee Reports and Committee Charter Amendments.
5. Quarterly Report on Financial Performance.
6. Inspector General Report on USPS Share of CSRS Pension Responsibility.
7. Quarterly Report on Service Performance.
8. Tentative Agenda for the June 21–23, 2010, meeting in Louisville, Kentucky.

Thursday, May 6 at 10:30 a.m. (Closed—if needed)

1. Continuation of Wednesday's closed session agenda.

CONTACT PERSON FOR MORE INFORMATION: Julie S. Moore, Secretary of the Board, U.S. Postal Service, 475 L'Enfant Plaza, SW., Washington, DC 20260–1000. Telephone (202) 268–4800.

Julie S. Moore,

Secretary.

[FR Doc. 2010–10020 Filed 4–26–10; 4:15 pm]

BILLING CODE 7710–12–P

SMALL BUSINESS ADMINISTRATION

Advisory Committee on Veterans Business Affairs

AGENCY: U.S. Small Business Administration.

ACTION: Notice of open Federal Advisory Committee Meeting.

SUMMARY: The SBA is issuing this notice to announce the location, date, time, and agenda for the next meeting of the Advisory Committee on Veterans Business Affairs. The meeting will be open to the public.

DATES: Tuesday, May 25, 2010 and Wednesday, May 26, 2010, from 9 a.m. to 5 p.m. in the Eisenhower Conference Room, Side B, located on the 2nd floor.

ADDRESSES: U.S. Small Business Administration, 409 3rd Street SW., Washington, DC 20416.

SUPPLEMENTARY INFORMATION: Pursuant to section 10(a) (2) of the Federal Advisory Committee Act (5 U.S.C., Appendix 2), SBA announces the meeting of the Advisory Committee on Veterans Business Affairs. The Advisory Committee on Veterans Business Affairs serves as an independent source of advice and policy recommendation to the Administrator of the U.S. Small Business Administration.

The purpose of the meeting is scheduled as a full committee meeting. The agenda will include presentations

regarding "Business Counseling and Training."

FOR FURTHER INFORMATION CONTACT: The meeting is open to the public; however, advance notice of attendance is requested. Anyone wishing to attend and/or make a presentation to the Advisory Committee on Veterans Business Affairs must contact Cheryl Simms, Program Liaison, by May 10, 2010 by fax or e-mail in order to be placed on the agenda. Cheryl Simms, Program Liaison, U.S. Small Business Administration, Office of Veterans Business Development, 409 3rd Street, SW., Washington, DC 20416, Telephone number: (202) 619–1697, Fax number: 202–481–6085, e-mail address: *cheryl.simms@sba.gov.*

Additionally, if you need accommodations because of a disability or require additional information, please contact Cheryl Simms, Program Liaison at (202) 619–1697; e-mail address: *cheryl.simms@sba.gov,* SBA, Office of Veterans Business Development, 409 3rd Street, SW., Washington, DC 20416.

For more information, please visit our Web site at *http://www.sba.gov/vets.*

Dated: April 20, 2010.

Meaghan Burdick,

SBA Committee Management Officer.

[FR Doc. 2010–9763 Filed 4–27–10; 8:45 am]

BILLING CODE 8025–01–P

SMALL BUSINESS ADMINISTRATION

[License No. 06/76–0329]

Pharos Capital Partners II, L.P.; Notice Seeking Exemption Under Section 312 of the Small Business Investment Act, Conflicts of Interest

Notice is hereby given that Pharos Capital Partners II, L.P., 1 Burton Hills Boulevard, Suite 180, Nashville, TN 37215, a Federal Licensee under the under the Small Business Investment Act of 1958, as amended ("the Act"), in connection with the sale of an asset to an Associate, has sought an exemption under Section 312 of the Act and Section 107.730, which Constitute Conflicts of Interest of the Small Business Administration ("SBA") Rules and Regulations (13 CFR 107.730). Pharos Capital Partners II, L.P. proposes to sell its equity interest in MCCI Group Holdings, LLC, 4960 SW 72nd Street, Suite 406, Miami, FL 33155 to Pharos Capital Partners II–A, L.P.

The financing is brought within the purview of § 107.730(a)(1) of the Regulations because Pharos Capital Partners II, L.P. and Pharos Capital Partners II–A, L.P. are considered Associates by virtue of Common Control as defined at 13 CFR 107.50.

Therefore, this transaction is considered self-dealing requiring an exemption. Notice is hereby given that any interested person may submit written comments on the transaction within fifteen days of the date of this publication to the Acting Associate Administrator for Investment, U.S. Small Business Administration, 409 Third Street, SW., Washington, DC 20416.

Dated: April 19, 2010.

Sean Greene,

Associate Administrator for Investment.

[FR Doc. 2010–9762 Filed 4–27–10; 8:45 am]

BILLING CODE P

DEPARTMENT OF STATE

[Public Notice 6970]

Notice of Committee Meeting

Title: Shipping Coordinating Committee; Notice of Committee Meeting.

The Shipping Coordinating Committee (SHC) will conduct an open meeting at 9:30 a.m. on Wednesday, May 5, 2010, in Room 2415 of the United States Coast Guard Headquarters Building, 2100 Second Street, SW., Washington, DC 20593–0001. The primary purpose of the meeting is to prepare for the eighty-seventh Session of the International Maritime Organization (IMO) Maritime Safety Committee (MSC) to be held at the IMO headquarters in London, United Kingdom, from May 12–21, 2010.

The primary matters to be considered include:

—Adoption of the agenda; report on credentials
—Decisions of other IMO bodies
—Consideration and adoption of amendments to mandatory instruments
—Measures to enhance maritime security
—Goal-based new ship construction standards
—LRIT-related matters
—Ship design and equipment (report of the fifty-second session and urgent matters emanating from the fifty-third session of the Sub-Committee)
—Flag State implementation (report of the seventeenth session of the Sub-Committee)
—Safety of navigation (report of the fifty-fifth session of the Sub-Committee)
—Dangerous goods, solid cargoes and containers (report of the fourteenth session of the Sub-Committee)
—Training and watchkeeping (report of the forty-first session of the Sub-Committee)
—Stability, load lines and fishing vessel safety (report of the fifty-second session of the Sub-Committee)
—Bulk liquids and gases (report of the fourteenth session of the Sub-Committee)
—Radiocommunications and search and rescue (urgent matters emanating from the fourteenth session of the Sub-Committee)
—Fire protection (urgent matters emanating from the fifty-fourth session of the Sub-Committee)
—Technical assistance sub-programme in maritime safety and security
—Role of the human element
—Formal safety assessment
—Piracy and armed robbery against ships
—General cargo ship safety
—Implementation of instruments and related matters
—Relations with other organizations
—Application of the Committee's Guidelines
—Work programme
—Any other business
—Consideration of the report of the Committee on its 87th session

Members of the public may attend this meeting up to the seating capacity of the room. To facilitate the building security process, those who plan to attend should contact the meeting coordinator, LCDR Jason Smith, by e-mail at *jason.e.smith2@uscg.mil,* by phone at (202) 372–1376, by fax at (202) 372–1925, or in writing at Commandant (CG–5212), U.S. Coast Guard, 2100 2nd Street, SW, Stop 7126, Washington, DC 20593–7126. Please note that due to security considerations, two valid, government-issued photo identifications must be presented to gain entrance to the Headquarters building. The Headquarters building is accessible by taxi and privately owned conveyance (public transportation is not generally available). However, parking in the vicinity of the building is extremely limited. Additional information regarding this and other IMO SHC public meetings may be found at: *http://www.uscg.mil/imo.*

This announcement will appear in the **Federal Register** less than 15 days prior to the meeting. The Department of State finds that there is an exceptional circumstance in that this advisory committee meeting must be held on May 5th in order to prepare for the IMO MSC meeting to be convened on May 12th.

Dated: April 23, 2010.

Jon Trent Warner,

Executive Secretary, Shipping Coordinating Committee, Department of State.

[FR Doc. 2010–9836 Filed 4–27–10; 8:45 am]

BILLING CODE 4710–09–P

OFFICE OF THE UNITED STATES TRADE REPRESENTATIVE

Notice With Respect to List of Countries Denying Fair Market Opportunities for Government-Funded Airport Construction Projects

AGENCY: Office of the United States Trade Representative.

ACTION: Notice with respect to a list of countries denying fair market opportunities for products, suppliers or bidders of the United States in airport construction projects.

DATES: *Effective Date:* Date of Publication.

FOR FURTHER INFORMATION CONTACT: Jean Heilman Grier, Senior Procurement Negotiator, Office of the United States Trade Representative, (202) 395–9476, or Maria Pagan, Associate General Counsel, Office of the United States Trade Representative, (202) 395–9626.

SUMMARY: Pursuant to section 533 of the Airport and Airway Improvement Act of 1982, as amended (49 U.S.C. 50104), the United States Trade Representative (USTR) has determined not to list any countries as denying fair market opportunities for U.S. products, suppliers, or bidders in foreign government-funded airport construction projects.

SUPPLEMENTARY INFORMATION: Section 533 of the Airport and Airway Improvement Act of 1982, as amended by section 115 of the Airport and Airway Safety and Capacity Expansion Act of 1987, Public Law 100–223 (codified at 49 U.S.C. 50104) ("the Act"), requires USTR to decide whether any foreign countries have denied fair market opportunities to U.S. products, suppliers, or bidders in connection with airport construction projects of $500,000 or more that are funded in whole or in part by the governments of such countries. The list of such countries must be published in the **Federal Register**. USTR has not received any complaints or other information that indicates that U.S. products, suppliers, or bidders are being denied fair market opportunities in such airport construction projects. As a consequence, for purposes of the Act, USTR has decided not to list any countries as denying fair market opportunities for U.S. products, suppliers, or bidders in foreign government-funded airport construction projects.

Ronald Kirk,

United States Trade Representative.

[FR Doc. 2010–9764 Filed 4–27–10; 8:45 am]

BILLING CODE 3190–W0–P

DEPARTMENT OF TRANSPORTATION

Surface Transportation Board

[Docket No. FD 35365]

Michael Williams–Control Exemption–St. Maries River Railroad, Inc.

Michael Williams (applicant),[1] a noncarrier, has filed a verified notice of exemption to acquire control of St. Maries River Railroad, Inc. (STMA), a Class III railroad, through the purchase of all of STMA's stock from STMA's parent, Potlatch Land & Lumber, LLC, by Williams Group, Inc. (WG).[2] Applicant currently controls two Class III railroads through stock ownership: BG & CM Railroad (BG & CM), which operates in Idaho; and Ozark Valley Railroad (OVRR), which operates in Missouri.[3] Applicant will control STMA through WG.

The parties intend to consummate the transaction by May 28, 2010. Applicant, however, may not consummate the transaction prior to the May 12, 2010 effective date of this exemption.

Applicant states that: (i) STMA does not connect with any rail lines of the BG & CM, OVRR, or any other railroad now controlled by applicant; (ii) the acquisition of control of STMA is not part of a series of anticipated transactions that would connect any of the railroads with each other or with any railroad in their corporate family; and (iii) this transaction does not involve a Class I rail carrier. Therefore, the transaction is exempt from the prior approval requirements of 49 U.S.C. 11323. *See* 49 CFR 1180.2(d)(2).

Under 49 U.S.C. 10502(g), the Board may not use its exemption authority to relieve a rail carrier of its statutory obligation to protect the interests of its employees. Section 11326(c), however, does not provide for labor protection for transactions under §§ 11324 and 11325 that involve only Class III rail carriers. Accordingly, the Board may not impose labor protective conditions here, because all the carriers involved are Class III rail carriers.

If the notice contains false or misleading information, the exemption is void *ab initio.* Petitions to revoke the exemption under 49 U.S.C. 10502(d) may be filed at any time. The filing of a petition to revoke will not automatically stay the effectiveness of the exemption. Petitions for stay must be filed no later than May 5, 2010 (at least 7 days before the exemption becomes effective).

An original and 10 copies of all pleadings, referring to Docket No. FD 35365, must be filed with the Surface Transportation Board, 395 E Street, SW., Washington, DC 20423–0001. In addition, one copy of each pleading must be served on Charles H. Montange, 426 NW. 162nd Street, Seattle, WA 98177.

Board decisions and notices are available on our Web site at: "*http://www.stb.dot.gov.*"

Decided: April 22, 2010.

By the Board, Rachel D. Campbell, Director, Office of Proceedings.

Kulunie L. Cannon,

Clearance Clerk.

[FR Doc. 2010–9782 Filed 4–27–10; 8:45 am]

BILLING CODE 4915–01–P

[1] Applicant has also concurrently filed a motion for protective order pursuant to 49 CFR 1104.14(b) to allow applicant to file the unredacted Stock Purchase Agreement under seal. That motion will be addressed in a separate decision.

[2] WG is a noncarrier holding company, which is wholly owned and controlled by applicant.

[3] Applicant indicates that it expects to file shortly a notice of exemption to acquire the stock of Dakota Southern Railway Company (DSRA), a Class III rail carrier, which operates in South Dakota. Approval for the proposed acquisition of control of DSRA is not authorized in this proceeding.

DEPARTMENT OF THE TREASURY

Submission for OMB Review; Comment Request

April 22, 2010.

The Department of the Treasury will submit the following public information collection requirements to OMB for review and clearance under the Paperwork Reduction Act of 1995, Public Law 104–13 on or after the date of publication of this notice. A copy of the submissions may be obtained by calling the Treasury Bureau Clearance Officer listed. Comments regarding these information collections should be addressed to the OMB reviewer listed and to the Treasury PRA Clearance Officer, Department of the Treasury, 1750 Pennsylvania Avenue, NW., Suite 11010, Washington, DC 20220.

DATES: Written comments should be received on or before May 28, 2010 to be assured of consideration.

Internal Revenue Service (IRS)

OMB Number: 1545–2156.

Type of Review: Extension without change of a currently approved collection.

Title: Revenue Procedure 2010–13, Disclosure of Activities Grouped under Section 469.

Abstract: This revenue procedure requires taxpayers to report to the Internal Revenue Service their groupings and regroupings of activities and the addition of specific activities within their existing groupings of activities for purposes of section 469 of the Internal Revenue Code and § 1.469–4 of the Income Tax Regulations.

Respondents: Private Sector: Businesses or other for-profits.

Estimated Total Burden Hours: 39,000 hours.

Bureau Clearance Officer: R. Joseph Durbala, Internal Revenue Service, 1111 Constitution Avenue, NW., Room 6129, Washington, DC 20224; (202) 622–3634.

OMB Reviewer: Shagufta Ahmed, Office of Management and Budget, New Executive Office Building, Room 10235, Washington, DC 20503; (202) 395–7873.

Celina Elphage,

Treasury PRA Clearance Officer.

[FR Doc. 2010–9777 Filed 4–27–10; 8:45 am]

BILLING CODE 4830–01–P

DEPARTMENT OF THE TREASURY

Internal Revenue Service

Community Volunteer Income Tax Assistance (VITA) Matching Grant Program—Availability of Application Packages

AGENCY: Internal Revenue Service (IRS), Treasury.

ACTION: Notice.

SUMMARY: This document provides notice of the availability of application packages for the 2011 Community Volunteer Income Tax Assistance (VITA) Matching Grant Program.

DATES: Application packages are available from the IRS at this time. The deadline for submitting an application to the IRS for the Community VITA Matching Grant Program is July 9, 2010.

ADDRESSES: Electronic copies of the application package can be obtained by visiting: *IRS.gov* (key word search—"VITA Grant"). Application packages may also be requested by sending an e-mail to *Grant.Program.Office@irs.gov.* Applications may be submitted electronically through GRANTS.gov or via hardcopy by the United States Postal Service, mail, or private delivery service by the deadline date. Application packages should be mailed to: Internal Revenue Service, Grant Program Office, 401 West Peachtree St., NW., Suite 1645, Stop 420–D, Atlanta, GA 30308.

FOR FURTHER INFORMATION CONTACT: The Grant Program Office at (404) 338–7894 (a non-toll free number) or by e-mail at *Grant.Program.Office@irs.gov.*

SUPPLEMENTARY INFORMATION: Authority for the 2011 Community Volunteer Income Tax Assistance (VITA) Matching Grant Demonstration Program for tax return preparation is contained in the Consolidated Appropriation Act, 2010, Public Law 111–117, signed December 16, 2009.

Dated: April 15, 2010.

Robin Taylor,

Chief, Grant Program Office, IRS, Stakeholder Partnerships, Education & Communication.

[FR Doc. 2010–9771 Filed 4–27–10; 8:45 am]

BILLING CODE 4830–01–P

DEPARTMENT OF THE TREASURY

Internal Revenue Service

Art Advisory Panel—Notice of Closed Meeting

AGENCY: Internal Revenue Service, Treasury.

ACTION: Notice of Closed Meeting of Art Advisory Panel.

SUMMARY: Closed meeting of the Art Advisory Panel will be held in Washington, DC.

DATES: The meeting will be May 12, 2010.

ADDRESSES: The closed meeting of the Art Advisory Panel will be held on May 12, 2010, in the Appeals Media Center beginning at 9:30 a.m., Franklin Court Building, 1099 14th Street, NW., Washington, DC 20005.

FOR FURTHER INFORMATION CONTACT: Joseph E. Bothwell, C:AP:PV:ART, 1099 14th Street, NW., Washington, DC 20005. Telephone (202) 435–5611 (not a toll free number).

SUPPLEMENTARY INFORMATION:

Notice is hereby given pursuant to section 10(a)(2) of the Federal Advisory Committee Act, 5 U.S.C. App., that a closed meeting of the Art Advisory Panel will be held on May 12, 2010, in room 4112 Appeals Large Conference Room beginning at 9:30 a.m., Franklin Court Building, 1099 14th Street, NW., Washington, DC 20005. The agenda will consist of the review and evaluation of the acceptability of fair market value appraisals of works of art involved in Federal income, estate, or gift tax returns. This will involve the discussion of material in individual tax returns made confidential by the provisions of 26 U.S.C. 6103.

A determination as required by section 10(d) of the Federal Advisory Committee Act has been made that this meeting is concerned with matters listed in section 552b(c)(3), (4), (6), and (7), and that the meeting will not be open to the public.

Kurt Meier,

Deputy Chief, Appeals.

[FR Doc. 2010–9773 Filed 4–27–10; 8:45 am]

BILLING CODE 4830–01–P

DEPARTMENT OF THE TREASURY

Internal Revenue Service

Tax Counseling for the Elderly (TCE) Program Availability of Application Packages

AGENCY: Internal Revenue Service (IRS), Treasury.

ACTION: Notice.

SUMMARY: This document provides notice of the availability of Application Packages for the 2011 Tax Counseling for the Elderly (TCE) Program.

DATES: Application packages are available from the IRS at this time. The deadline for submitting an application package to the IRS for the 2011 Tax Counseling for the Elderly (TCE) Program is July 9, 2010.

ADDRESSES: Electronic copies of the application package can be obtained by visiting: *IRS.gov* (key word search—"TCE"). Application packages may also be requested by sending an e-mail to *tce.grant.office@irs.gov.* Applications may be submitted either via hardcopy by the United States Postal Service, mail, or private delivery service; or electronically through *GRANTS.gov* by the deadline date. Application Packages may be mailed to: Internal Revenue Service, 5000 Ellin Road, NCFB C4–162, Lanham, Maryland 20706, Attention: Tax Counseling for the Elderly Grant Program Office.

FOR FURTHER INFORMATION CONTACT: The TCE Grant Program Office at (404) 338–7894 (a non-toll free number) or by e-mail at *tce.grant.office@irs.gov.*

SUPPLEMENTARY INFORMATION: Authority for the Tax Counseling for the Elderly (TCE) Program is contained in Section 163 of the Revenue Act of 1978, Public Law 95–600, (92 Stat. 12810), November 6, 1978. Regulations were published in the **Federal Register** at 44 FR 72113 on December 13, 1979. Section 163 gives the IRS authority to enter into cooperative agreements with private or public non-profit agencies or organizations to establish a network of trained volunteers to provide free tax information and return preparation

assistance to elderly individuals. Elderly individuals are defined as individuals age 60 and over at the close of their taxable year. Because applications are being solicited before the FY 2011 budget has been approved, cooperative agreements will be entered into subject to appropriation of funds.

Dated: April 15, 2010.

Robin Taylor,

Chief, Grant Program Office, IRS, Stakeholder, Partnerships, Education & Communication.

[FR Doc. 2010–9772 Filed 4–27–10; 8:45 am]

BILLING CODE 4830–01–P

DEPARTMENT OF VETERANS AFFAIRS

[OMB Control No. 2900–New (10–0505)]

Proposed Information Collection (Health Resource Center Medical Center Payment Form) Activity: Comment Request

AGENCY: Veterans Health Administration, Department of Veterans Affairs.

ACTION: Notice.

SUMMARY: The Veterans Health Administration (VHA) is announcing an opportunity for public comment on the proposed collection of certain information by the agency. Under the Paperwork Reduction Act (PRA) of 1995, Federal agencies are required to publish notice in the **Federal Register** concerning each proposed collection of information, including each proposed new collection, and allow 60 days for public comment in response to the notice. This notice solicits comments on information needed to allow claimants to pay their medical care copayment online.

DATES: Written comments and recommendations on the proposed collection of information should be received on or before June 28, 2010.

ADDRESSES: Submit written comments on the collection of information through Federal Docket Management System (FDMS) at *http://www.Regulations.gov;* or to Mary Stout, Veterans Health Administration (193E1), Department of Veterans Affairs, 810 Vermont Avenue, NW., Washington, DC 20420 or e-mail: *mary.stout@va.gov.* Please refer to "OMB Control No. 2900—New (10–0505)" in any correspondence. During the comment period, comments may be viewed online through FDMS.

FOR FURTHER INFORMATION CONTACT: Mary Stout (202) 461–5867 or FAX (202) 273–9381.

SUPPLEMENTARY INFORMATION: Under the PRA of 1995 (Pub. L. 104–13; 44 U.S.C. 3501–3521), Federal agencies must obtain approval from the Office of Management and Budget (OMB) for each collection of information they conduct or sponsor. This request for comment is being made pursuant to Section 3506(c)(2)(A) of the PRA.

With respect to the following collection of information, VHA invites comments on: (1) Whether the proposed collection of information is necessary for the proper performance of VHA's functions, including whether the information will have practical utility; (2) the accuracy of VHA's estimate of the burden of the proposed collection of information; (3) ways to enhance the quality, utility, and clarity of the information to be collected; and (4) ways to minimize the burden of the collection of information on respondents, including through the use of automated collection techniques or the use of other forms of information technology.

Title: Health Resource Center Medical Center Payment Form, VA Form 10–0505.

OMB Control Number: 2900—New (10–0505).

Type of Review: New collection.

Abstract: Data collected on VA Form 10–0505 will be used to allow claimants with medical care copayment debts to pay online with a credit card or Automated Clearing House transaction.

Affected Public: Individuals or households.

Estimated Total Annual Burden: 48,000.

Estimated Average Burden per Respondent: 4 minutes.

Frequency of Response: On occasion.

Estimated Number of Respondents: 60,000.

Estimated Number of Responses: 720,000.

Dated: April 23, 2010.

By direction of the Secretary.

Denise McLamb,

Program Analyst, Enterprise Records Service.

[FR Doc. 2010–9807 Filed 4–27–10; 8:45 am]

BILLING CODE 8320–01–P

Federal Register

Wednesday,
April 28, 2010

Part II

Environmental Protection Agency

40 CFR Part 87

Advance Notice of Proposed Rulemaking on Lead Emissions From Piston-Engine Aircraft Using Leaded Aviation Gasoline; Proposed Rule

ENVIRONMENTAL PROTECTION AGENCY

40 CFR Part 87

[EPA–HQ–OAR–2007–0294; FRL–9141–7]

RIN 2060–AP79

Advance Notice of Proposed Rulemaking on Lead Emissions From Piston-Engine Aircraft Using Leaded Aviation Gasoline

AGENCY: Environmental Protection Agency (EPA).

ACTION: Advance notice of proposed rulemaking.

SUMMARY: EPA is issuing this Advance Notice of Proposed Rulemaking (ANPR) to describe information currently available and information being collected that will be used by the Administrator to issue a subsequent proposal regarding whether, in the Administrator's judgment, aircraft lead emissions from aircraft using leaded aviation gasoline (avgas) cause or contribute to air pollution which may reasonably be anticipated to endanger public health or welfare. In this ANPR we describe and request comment on the data available for evaluating lead emissions, ambient concentrations and potential exposure to lead from the continued use of leaded avgas in piston-engine powered aircraft. We also describe and request comment on additional information being collected that will inform any future action.

This ANPR is being issued to further respond to a petition submitted by Friends of the Earth (FOE) in 2006. Emissions of lead from piston-engine aircraft using leaded avgas comprise approximately half of the national inventory of lead emitted to air. There are almost 20,000 airport facilities in the U.S. at which leaded avgas may be used. EPA has long-standing concerns regarding exposure to lead, particularly during childhood. The most recent review and revision of the National Ambient Air Quality Standard (NAAQS) for lead, promulgated in 2008, found that serious health effects occur at much lower levels of lead in blood than previously identified and did not identify a safe level of lead exposure.

DATES: Comments must be received on or before June 28, 2010.

ADDRESSES: Submit your comments, identified by Docket ID No. EPA–HQ–OAR–2007–0294, by one of the following methods:

- *http://www.regulations.gov:* Follow the on-line instructions for submitting comments.
- *E-mail: a-and-r-docket@epa.gov.*
- *Fax:* (202) 566–9744.
- *Mail:* Environmental Protection Agency, Mail Code: 6102T, 1200 Pennsylvania Ave., NW., Washington, DC 20460. Please include two copies.
- *Hand Delivery:* EPA Docket Center (Air Docket), U.S. Environmental Protection Agency, EPA West Building, 1301 Constitution Avenue, NW., Room: 3334 Mail Code: 2822T, Washington, DC. Such deliveries are only accepted during the Docket's normal hours of operation, and special arrangements should be made for deliveries of boxed information.

Instructions: Direct your comments to Docket ID No. EPA–HQ–OAR–2007–0294. EPA's policy is that all comments received will be included in the public docket without change and may be made available online at *http://www.regulations.gov,* including any personal information provided, unless the comment includes information claimed to be Confidential Business Information (CBI) or other information whose disclosure is restricted by statute. Do not submit information that you consider to be CBI or otherwise protected through *http://www.regulations.gov* or e-mail. The *http://www.regulations.gov* Web site is an "anonymous access" system, which means EPA will not know your identity or contact information unless you provide it in the body of your comment. If you send an e-mail comment directly to EPA without going through *http://www.regulations.gov* your e-mail address will be automatically captured and included as part of the comment that is placed in the public docket and made available on the Internet. If you submit an electronic comment, EPA recommends that you include your name and other contact information in the body of your comment and with any disk or CD–ROM you submit. If EPA cannot read your comment due to technical difficulties and cannot contact you for clarification, EPA may not be able to consider your comment. Electronic files should avoid the use of special characters, any form of encryption, and be free of any defects or viruses. For additional information about EPA's public docket visit the EPA Docket Center homepage at *http://www.epa.gov/epahome/dockets.htm.*

Docket: All documents in the docket are listed in the *http://www.regulations.gov* index. Although listed in the index, some information is not publicly available, *e.g.,* CBI or other information whose disclosure is restricted by statute. Certain other material, such as copyrighted material, will be publicly available only in hard copy. Publicly available docket materials are available either electronically in *http://www.regulations.gov* or in hard copy at the EPA Docket Center, EPA/DC, EPA West, Room 3334, 1301 Constitution Avenue, NW., Washington, DC. The Public Reading Room is open from 8:30 a.m. to 4:30 p.m., Monday through Friday, excluding legal holidays. The telephone number for the Public Reading Room is (202) 566–1744, and the telephone number for the Air Docket is (202) 566–1742.

FOR FURTHER INFORMATION CONTACT: Marion Hoyer, Assessment and Standards Division, Office of Transportation and Air Quality, 2000 Traverwood Drive, Ann Arbor, MI 48105; telephone number: (734) 214–4513; fax number: (734) 214–4821; e-mail address: *hoyer.marion@epa.gov.*

SUPPLEMENTARY INFORMATION:

I. General Information

A. What should I consider as I prepare my comments for EPA?

1. *Submitting CBI.* Do not submit this information to EPA through *http://www.regulations.gov* or e-mail. Clearly mark the part or all of the information that you claim to be CBI. For CBI information in a disk or CD ROM that you mail to EPA, mark the outside of the disk or CD ROM as CBI and then identify electronically within the disk or CD ROM the specific information that is claimed as CBI. In addition to one complete version of the comment that includes information claimed as CBI, a copy of the comment that does not contain the information claimed as CBI must be submitted for inclusion in the public docket. Information so marked will not be disclosed except in accordance with procedures set forth in 40 CFR Part 2.

2. *Tips for Preparing Your Comments.* When submitting comments, remember to:

- Identify the rulemaking by docket number and other identifying information (subject heading, **Federal Register** date and page number).
- Follow directions—The agency may ask you to respond to specific questions or organize comments by referencing a Code of Federal Regulations (CFR) part or section number.
- Explain why you agree or disagree, suggest alternatives, and substitute language for your requested changes.
- Describe any assumptions and provide any technical information and/or data that you used.
- If you estimate potential costs or burdens, explain how you arrived at your estimate in sufficient detail to allow for it to be reproduced.

- Provide specific examples to illustrate your concerns, and suggest alternatives.
- Explain your views as clearly as possible, avoiding the use of profanity or personal threats.
- Make sure to submit your comments by the comment period deadline identified.

Table of Contents

I. Overview
A. Background on Leaded Aviation Gasoline
B. Background Information Regarding General Aviation and Use of Piston-Engine Aircraft
C. Background on the Petition and EPA's Response
D. Statutory Authority
1. Background
2. Regulatory Authority for Emission Standards
3. Regulatory Authority for Fuel Standards
E. Federal Actions To Reduce Lead Exposure
II. Health and Welfare Effects of Lead
A. Multimedia and Multi-Pathway Exposure Considerations
B. Health Effects Information
1. Blood Lead
2. Health Effects
3. At-Risk Populations and Life Stages
C. Welfare Effects
1. Terrestrial Ecosystems
2. Aquatic Ecosystems
III. Lead Emissions from Piston-Engine Aircraft
A. Inventory of Lead from Piston-Engine Powered Aircraft
1. National Emissions of Lead from Piston-Engine Aircraft
2. Airport-Specific Emissions of Lead from Piston-Engine Aircraft
B. Projections for Future Growth
IV. Lead Concentrations in the Vicinity of Airports
A. Chemical and Physical Properties of Lead Emitted by Piston-Engine Aircraft
B. Summary of Airport Lead Monitoring and Modeling Studies
1. Summary of Airport Lead Monitoring Studies
2. Summary of Airport Lead Modeling Studies
V. Exposure to Lead from Piston-Engine Aircraft and Potential for Impacts
A. Exposure to Lead Emissions from Piston-Engine Aircraft
1. Population Residing Near Airports
2. Children Attending School Near Airports
3. Agricultural Activities
4. Pilots, Student-Trainees, Passengers
5. Bioaccumulation of Lead in Aquatic Organisms
B. Related Exposures of Concern
1. Lead Contribution to Ambient Particulate Matter
2. Ethylene Dibromide
3. Non-Exhaust Exposure to Tetraethyl Lead
VI. Additional Information Available for the NPRM to Evaluate the Potential for Public Health and Welfare Impacts and Considerations Regarding Engine Emission Standards
A. The Lead NAAQS and Lead Emissions from Piston-Engine Aircraft
1. Monitoring Lead at Airports to Evaluate Ambient Concentrations to Which Lead Emissions from Piston-Engine Aircraft Contribute
2. Evaluating the Contribution of Lead Emissions from Piston-Engine Aircraft to Areas Approaching or Exceeding the Lead NAAQS
B. Additional Information EPA Is Collecting to Evaluate Ambient Lead Concentrations Attributable to Emissions from Piston-Engine Aircraft
C. Considerations Regarding Engine Emission Standards
VII. Statutory and Executive Order Reviews

I. Overview

EPA is publishing this ANPR in further response to a petition submitted by Friends of the Earth (FOE) entitled "Petition for Rulemaking Seeking the Regulation of Lead Emissions From General Aviation Aircraft Under § 231 of the Clean Air Act." [1] In the petition, FOE requests that the Administrator of EPA: (1) Make a finding that lead emissions from general aviation aircraft endanger public health and welfare and issue a proposed emission standard for lead from general aviation aircraft under the Clean Air Act (CAA) or, alternatively, (2) if the Administrator of EPA believes that insufficient information exists to make such a finding, commence a study and investigation of the health and environmental impacts of lead emissions from general aviation aircraft, including impacts to humans, animals and ecosystems under the CAA and issue a public report on the findings of the study and investigation. Section I.C of this notice discusses the background on the petition and EPA's response to date and Section I.D discusses EPA's statutory authority under section 231(a) of the CAA. Under the CAA, if, in the Administrator's judgment, lead emissions from the use of leaded avgas cause or contribute to air pollution which may reasonably be anticipated to endanger public health or welfare, then EPA would be required under our statutory authority to prescribe standards to control the emissions of lead from piston-engine aircraft. In promulgating such standards, the EPA would be required to consult with the Federal Aviation Administration (FAA), and could not change standards if doing so would significantly increase noise and adversely affect safety. FAA would then be required, after consultation with EPA, to prescribe regulations to insure compliance with any standards to control the emissions of lead from piston-engine aircraft. Under 49 U.S.C. 44714, FAA would also be required to prescribe standards for the composition or chemical or physical properties of piston-engine fuel or fuel additives to control or eliminate aircraft lead emissions.

In this notice, we discuss our analysis of the relevant information and issues to date, and we seek further public input regarding FOE's petition. For the purposes of this notice, we will refer to the positive or negative exercise of judgment as to whether lead emissions from aircraft engines resulting from the use of aviation gasoline (avgas) cause or contribute to air pollution which may reasonably be anticipated to endanger public health or welfare as the "endangerment finding" and the "cause or contribute finding." This short-hand use of "endangerment finding" and "cause or contribute finding" is strictly for purposes of simplifying the discussion, and should not be read as implying that EPA considers the exercise of the Administrator's judgment to require a formal "finding" or "determination."

In 2006, EPA completed the Air Quality Criteria Document (AQCD) for Lead, which critically assesses and integrates relevant scientific information regarding the health effects of lead.[2] EPA concluded that the latest evidence indicates adverse health effects, most notably among children, are occurring at much lower levels than previously considered. In 2008, EPA decreased the level of the primary National Ambient Air Quality Standard (NAAQS) for lead from 1.5 micrograms per cubic meter ($\mu g/m^3$) to 0.15 $\mu g/m^3$ in order to provide increased protection for children and other at-risk populations against an array of adverse health effects, most notably neurological effects in children, including neurocognitive and neurobehavioral effects.[3] Neurotoxic effects in children and cardiovascular effects in adults are among those best substantiated as occurring at blood lead concentrations as low as 5 to 10 µg/dL (or possibly lower); and these categories are currently clearly of greatest public health concern (AQCD for Lead, p. 8–60). The U.S. Centers for Disease Control and Prevention (CDC) concluded in 2005 that no "safe" threshold for blood lead has been identified, and emphasized the

[1] *See* docket item EPA–HQ–OAR–2007–0294–0003.

[2] U.S. Environmental Protection Agency (2006) Air Quality Criteria for Lead. Washington, DC, EPA/600/R–5/144aF. Available online at: *http://www.epa.gov/ncea/*.

[3] National Ambient Air Quality Standards for Lead 73 FR 66965 (Nov. 12, 2008).

importance of preventative measures.[4] [5] To provide increased protection against lead-related welfare effects, in 2008 EPA revised the secondary standard to be identical in all respects to the revised primary standard. Section II of this ANPR provides more detail regarding health and welfare effects of lead.

Given the recent findings of the science summarized by EPA in the AQCD for Lead as well as the findings of the CDC, the Agency is concerned about the potential for health and welfare effects from exposure to lead emissions from aircraft engines using leaded avgas. On a national basis, emissions of lead from aircraft engines using leaded avgas are the largest single source category for emissions of lead to air, comprising approximately half of the national inventory.[6] There are almost 20,000 airport facilities in the U.S. at which leaded avgas may be used, and in some areas of the country there are densely populated residential developments immediately adjacent to these airport facilities. As described in Section V, we estimate that up to 16 million people reside and three million children attend school in close proximity to airport facilities servicing piston-engine aircraft that are operating on leaded avgas.

Exposure to lead occurs through multiple routes (*e.g.,* inhalation, ingestion and dermal adsorption), and lead emitted to the atmosphere can contribute to lead levels in multiple media (*e.g.,* air, soil and water). The lead monitoring studies conducted at or near airports, described in Section IV of this ANPR, indicate that lead levels in ambient air on and near airports servicing piston-engine aircraft are higher than lead levels in areas not directly influenced by a lead source. In addition, the emissions of lead from these engines are also expected to distribute widely through the environment. This is in part due to the emission of lead at various altitudes during aircraft operations as well as the fine particle size of lead emitted by piston engines. Continued use of leaded avgas provides an ongoing source of new lead that is deposited in various environmental media and participates in long term cycling mechanisms in the environment, thus adding to the pool of lead available for uptake by humans and biota. We expect the lead from avgas to be bioavailable in the same way as the lead emitted by motor vehicles in the past, which was well documented to contribute to blood levels through both ingestion and inhalation.

As noted in Section II of this ANPR, once deposited to surfaces, lead can subsequently be resuspended into the ambient air and, because of the persistence of lead, emissions of this metal contribute to environmental media concentrations for many years into the future. Lead that is a soil or dust contaminant today may have been airborne yesterday or many years ago. Therefore lead emissions from piston-engine aircraft could contribute to increased lead exposure and risk currently or at some time in the future.

Section VI of this ANPR provides an overview of additional information that will be available for the NPRM to evaluate the potential for public health and welfare impacts from lead emitted by piston-engine aircraft. These additional data will come from lead monitoring being planned to satisfy requirements of the Lead NAAQS, air quality modeling planned at EPA and any information submitted to EPA during the comment period for this ANPR.

The remainder of this section provides background on leaded avgas, FOE's petition and EPA's response to the petition to date, and statutory authority over emissions, fuel for aircraft and Federal actions to reduce lead exposure. Section II provides a discussion of the health and welfare effects of lead. Sections III, IV and V describe the emissions of lead from avgas, ambient lead concentration in the vicinity of airports and potential exposure to lead from leaded avgas, respectively. In Section VI, we describe the additional information EPA is collecting and considerations regarding engine emission standards. Section VII contains information on statutory and executive order reviews covering this action.

A. Background on Leaded Aviation Gasoline

In 1996, EPA promulgated regulations that banned the use of leaded gasoline in highway vehicles.[7] The addition of lead to fuel used in piston-engine powered aircraft was not banned in this action, and the use of leaded avgas is the largest remaining source category of lead emissions. Lead is not added to jet fuel that is used in commercial aircraft, most military aircraft, or other turbine-engine powered aircraft. Most piston-engine aircraft fall into the categories of either general aviation (GA) or air taxi (AT). GA and AT aircraft include a diverse set of aircraft types and engine models and are used in a wide variety of applications.[8]

Lead is added to fuel for piston-engine aircraft in the form of tetraethyl lead (TEL). This lead additive helps boost fuel octane, prevents knock, and prevents valve seat recession and subsequent loss of compression for engines without hardened valves. There are two main types of leaded avgas: 100 Octane, which can contain up to 4.24 grams of lead per gallon; and 100 Octane Low Lead (100 LL), which can contain up to 2.12 grams of lead per gallon. Currently, 100LL is the most commonly available and most commonly used type of avgas.[9] [10] TEL was first used in piston-engine aircraft in 1927.[11] Into the 1950s commercial and military aircraft in the U.S. operated on 100 Octane leaded avgas, but in subsequent years, the commercial and military aircraft fleet largely converted to jet turbine-engine propelled aircraft. However, the use of avgas containing 4 grams of lead per gallon continued in piston-engine aircraft until the early 1970s when 100LL became the dominant leaded fuel in use. Currently, very little 100 Octane is supplied in the U.S. and we use the lead content of 100LL (2.12 grams per gallon) to characterize the lead available from avgas.

Since lead is a persistent pollutant, it is important to characterize the historical use of this fuel.

---

[4] Centers for Disease Control and Prevention (2005) Preventing lead poisoning in young children: a statement by the Centers for Disease Control and Prevention. Atlanta, GA: U.S. Department of Health and Human Services, Public Health Service. August.

[5] Advisory Committee on Childhood Lead Poisoning Prevention (ACCLPP) (2007) Interpreting and managing blood lead levels <10 ug/dL in children and reducing childhood exposures to lead: Recommendations of CDC's Advisory Committee on Childhood Lead Poisoning Prevention. Morbidity and Mortality Weekly Report. 56(RR–8). November 2, 2007.

[6] U.S. Environmental Protection Agency Electronic Report on the Environment. Available at: *http://cfpub.epa.gov/eroe.* Updated in December 2009 using the 2005 National Emissions Inventory.

[7] *See* "Prohibition on Gasoline Containing Lead or Lead Additives for Highway Use" 61 FR 3832 (Feb. 2, 1996).

[8] Commercial aircraft include those used for scheduled service transporting passengers, freight, or both. Air taxis fly scheduled and for-hire service carrying passengers, freight or both, but they usually are smaller aircraft than those operated by commercial air carriers. General aviation includes most other aircraft (fixed and rotary wing) used for recreational flying, business, and personal transportation.

[9] ChevronTexaco (2006) Aviation Fuels Technical Review. FTR–3. Available online at: *http://www.chevronglobalaviation.com/docs/aviation_tech_review.pdf.*

[10] ASTM International (2007) Standard Specification for Aviation Gasolines D910–06.

[11] Ogston, A.R. (1981) A Short History of Aviation Gasoline Development, 1903–1980. Society of Automotive Engineers. Paper number 810848.

Approximately 14.6 billion gallons of leaded avgas have been consumed in the U.S. between 1970 and 2007. If this fuel was all 100LL, it would account for approximately 34,000 tons [12] of lead emitted to the air.[13] In terms of the potential impacts from long-term use of leaded avgas at and near airports, older facilities would be expected to have a legacy of lead, particularly those that supported military and commercial aircraft operating on 100 Octane. Over 3,000 of the 20,000 airport facilities in the U.S. are at least 50 years old and some airports have been in operation since the early 1900s.

The Department of Energy's (DOE's) Energy Information Administration (EIA) provides information on the volume of leaded avgas supplied in the U.S.[14] The Department of Transportation's (DOT's) FAA provides information on the volume of leaded avgas consumed in the U.S.[15] EPA has historically used the DOE EIA avgas fuel volumes supplied to calculate national lead inventories from the consumption of leaded avgas. We are currently evaluating methods used by DOE and DOT to calculate annual avgas supply and consumption volumes. In this document, we provide avgas fuel volume data supplied by DOE and DOT and we note the source of the data for clarity. Over the past ten years, DOE estimates of the volume of leaded avgas supplied has ranged from 326 million gallons in 1999 to 235 million gallons in 2008 (Figure 1). Applying the concentration of lead in 100LL (2.12 grams of lead per gallon), the total quantity of lead supplied in avgas in the nation has ranged from 762 tons in 1999 to 550 tons in 2008 (a 28% decrease over that time period). The decrease in fuel consumption is attributed to the decrease in piston-engine aircraft activity over that time period and not due to a shift to unleaded fuel. There are currently over 200,000 piston-engine aircraft in the U.S. that continue to consume leaded avgas and approximately 2,000 new piston-engine aircraft requiring leaded avgas are manufactured annually.[16] As described in Section III.B of this ANPR, there is a slight growth in the activity of general aviation aircraft projected to 2025.

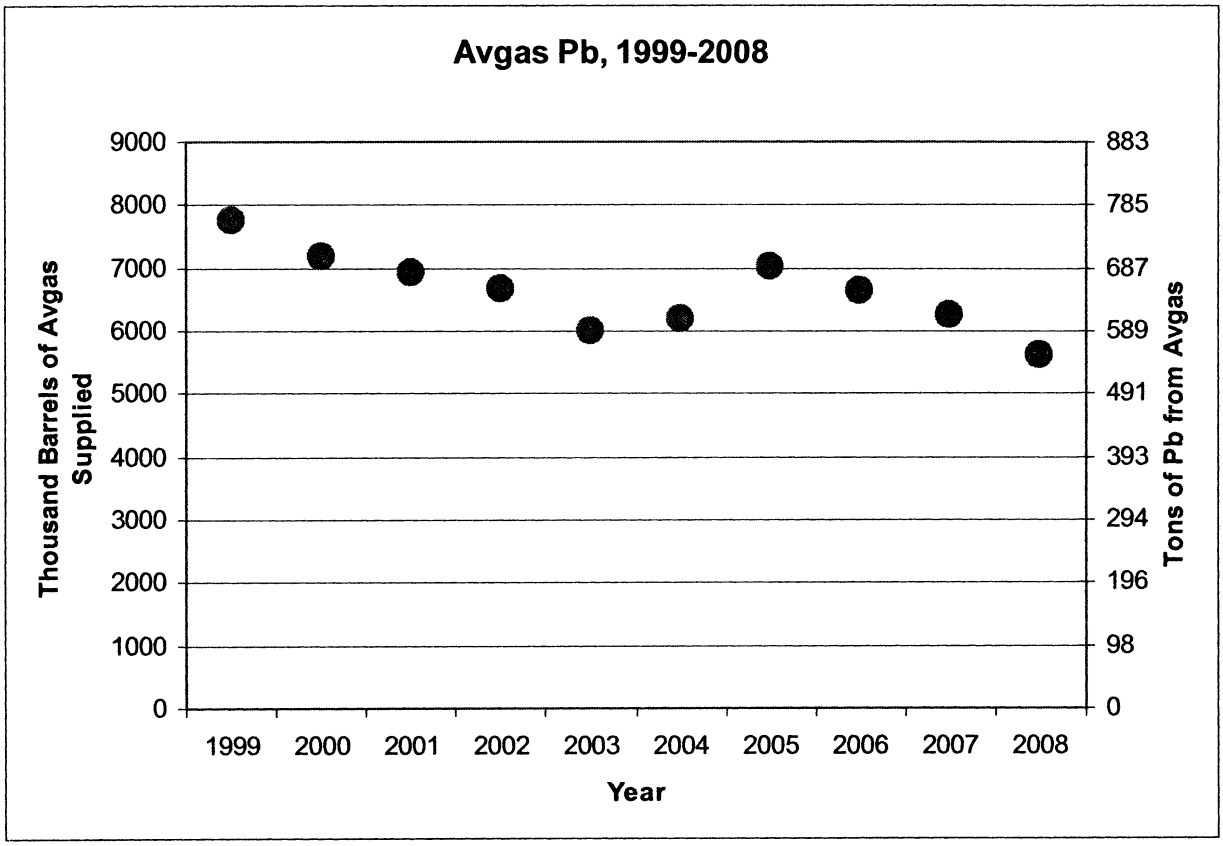

Figure 1. Tons of Lead Supplied in Aviation Gasoline Annually from 1999 – 2008.

Source: DOE Energy Information Administration

[12] In this ANPR and in EPA's National Emissions Inventory, the use of the unit tons refers to short tons.

[13] Oak Ridge National Laboratory (2009) Transportation Energy Data Book: Edition 28. Available at: *http://cta.ornl.gov/data.* Table A.7.

[14] Department of Energy Information Administration. Fuel production volume data obtained from *http://tonto.eia.doe.gov/dnav/pet/hist/mgaupus1A.htm* accessed June 2009.

[15] U.S. Department of Transportation Federal Aviation Administration Aviation Policy and Plans. FAA Aerospace Forecast Fiscal Years 2009–2025. p.81. Available at: *http://www.faa.gov/data_research/aviation/aerospace_forecasts/2009–2025/media/2009%20Forecast%20Doc.pdf.* This document provides historical data for 2000–2008 as well as forecast data.

[16] General Aviation Manufacturers Association (2008) General Aviation Statistical Databook & Industry Outlook. Available online at: *http://www.gama.aero/files/2008_general_aviation_statistical_databook__indust_499b0dc37b.pdf.*

B. Background Information Regarding General Aviation and Use of Piston-Engine Aircraft

In the U.S., general aviation aircraft fly over 27 million hours and carry 166 million passengers annually.[17] Approximately 66 percent of hours flown by general aviation are conducted by piston-engine aircraft.[18] Aircraft in the general aviation fleet are used for personal transportation (36 percent), instructional flying (19 percent), corporate uses (11 percent), business (11 percent), air taxi and air tours (8 percent) and the remainder include hours spent in other applications such as aerial observation and aerial application.[19] According to the 2008 General Aviation Statistical Databook & Industry Outlook report by the General Aviation Manufacturers Association (GAMA) there were 578,541 pilots in the United States in 2008.[20] According to GAMA, in 2008, the number of active single-engine piston-powered aircraft was 144,220 and the number of active twin-engine piston-powered aircraft was 18,385. In 2008, 1,791 new piston-engine aircraft were manufactured in the U.S.

FAA's Office of Air Traffic provides a complete listing of operational airport facilities in the National Airspace System Resources (NASR) database.[21] In 2008, there were 19,896 airport facilities in the U.S., the vast majority of which are expected to have activity by piston-engine aircraft that operate on leaded avgas. FAA's National Plan of Integrated Airport Systems identifies approximately 3,400 airports that are significant to national air transportation.

C. Background on the Petition and EPA's Response

In a 2003 letter to the EPA, FOE initially raised the issue of the potential for endangerment caused or contributed to by lead emissions from the use of leaded avgas.[22] In 2006, FOE filed a petition with EPA requesting that the Administrator find endangerment or, if there was insufficient information to find endangerment, commence a study of lead emissions from piston-engine aircraft. In 2007, the EPA issued a **Federal Register** notice on the petition requesting comments and information related to a wide range of issues regarding the use of leaded avgas and potential public health and welfare exposure issues.[23] We sought comments regarding exposure to lead from avgas combustion, emissions of lead, fuel options, and piston-engine technology. The comments received to date are publicly available in the docket (EPA–HQ–OAR–2007–0294). The majority of comments received concerned the nature of the industry and fuel supply issues. The commenters did not supply information regarding health or exposure issues. In 2008, the EPA initiated a lead study which will improve the manner in which EPA models emissions from piston-engine aircraft. This study is described in further detail in Section VI of this document. At the time we received FOE's petition, the EPA was in the process of a full re-evaluation of the science supporting the lead NAAQS. Information from that re-evaluation and the relationship between the new lead standard and the emissions of lead from piston-engine aircraft are discussed in this ANPR.

D. Statutory Authority

1. Background

Section 231 of the CAA sets forth EPA's authority to regulate aircraft emissions of air pollution. As described further in Section I.D.2 of this ANPR, Section 231(a)(2)(A) requires EPA to, from time to time, issue proposed emission standards applicable to the emission of any air pollutant from any class or classes of aircraft engines which, in the Administrator's judgment, cause or contribute to air pollution which may reasonably be anticipated to endanger public health or welfare. EPA has broad authority in exercising its judgment regarding whether emissions from certain sources cause or contribute to air pollution which may reasonably be anticipated to endanger public health or welfare.[24] EPA has discussed its "endangerment finding" authority at length in recent notices for greenhouse gases published in the **Federal Register**, and we refer readers to those notices for detailed discussions of the analytical and legal framework.[25]

In 1976, EPA listed lead under CAA section 108, making it what is called a "criteria pollutant." As part of the listing decision, EPA determined that lead was an air pollutant which, in the Administrator's judgment, has an adverse effect on public health or welfare under then section 108(a). Once lead was listed, EPA issued primary and secondary NAAQS that the Administrator determined were requisite to protect public health with an adequate margin of safety and to protect public welfare from any known or anticipated adverse effects. Section 109(b)(1) and (2). As discussed elsewhere in this notice, EPA issued the first NAAQS for lead in 1978, and recently revised the lead NAAQS by reducing the level of the standard from 1.5 $\mu g/m^3$ to 0.15 $\mu g/m^3$, measured over a 3-month averaging period. These actions are part of the context for the issues before EPA under section 231(a).

The first part of the endangerment test concerns identification of air pollution which may reasonably be anticipated to endanger public health or welfare. The CAA defines both "air pollutant" and "welfare." Air pollutant is defined in CAA section 302(g) as: "Any air pollution agent or combination of such agents, including any physical, chemical, biological, radioactive (including source material, special nuclear material, and byproduct material) substance or matter which is emitted into or otherwise enters the ambient air. Such term includes any precursors to the formation of any air pollutant, to the extent the Administrator has identified such precursor or precursors for the particular purpose for which the term 'air pollutant' is used." Lead fits within

[17] General Aviation Manufacturers Association (2008) General Aviation Statistical Databook and Industry Outlook, p.30. Retrieved on August 17, 2009 from: *http://www.gama.aero/files/2008_general_aviation_statistical_databook__indust_499b0dc37b.pdf.*

[18] General Aviation Manufacturers Association (2008) General Aviation Statistical Databook and Industry Outlook, p.30. Retrieved on August 17, 2009 from: *http://www.gama.aero/files/2008_general_aviation_statistical_databook__indust_499b0dc37b.pdf.*

[19] General Accounting Office Report to Congressional Requesters (2001) General Aviation Status of the Industry, Related Infrastructure, and Safety Issues. GAO–01–916.

[20] General Aviation Manufacturers Association (2008) General Aviation Statistical Databook and Industry Outlook, pp.51–55. Retrieved on August 17, 2009 from: *http://www.gama.aero/files/2008_general_aviation_statistical_databook__indust_499b0dc37b.pdf.*

[21] An electronic report can be generated from the NASR database and is available for download from the Internet at the following Web site. *http://www.faa.gov/airports_airtraffic/airports/airport_safety/airportdata_5010/.* This database is updated every 56 days.

[22] FOE letter dated December 12, 2003 submitted to EPA Docket EPA–HQ–OAR–2002–0030.

[23] *See* "Petition Requesting Rulemaking To Limit Lead Emissions from General Aviation Aircraft; Request for Comments" 72 FR 64570 (Nov. 16, 2007).

[24] *See, e.g., Ethyl Corp.* v. *EPA,* 541 F.2d 1, 6 (DC Cir.), cert. denied 426 U.S. 941 (1976); *see also Massachusetts* v. *EPA,* 549 U.S. 497, 506, n.7 (2007).

[25] *See,* "Endangerment and Cause or Contribute Findings for Greenhouse Gases under Section 202(a) of the Clean Air Act; Final Rule," 74 FR 66496, 66505 (Dec. 15, 2009); *see also,* "Proposed Endangerment and Cause or Contribute Findings for Greenhouse Gases Under Section 202(a) of the Clean Air Act," 74 FR 18886, 18890–94 (April 24, 2009); *see also* "Regulating Greenhouse Gas Emissions Under the Clean Air Act; Advance Notice of Proposed Rulemaking," 73 FR 44354, 44421–23 (July 30, 2008).

this capacious definition, and has long been regulated as an air pollutant by EPA under the CAA (*see* Section I.E. of this ANPR).

There is no definition of public health in the CAA. The U.S. Supreme Court has discussed the concept in the context of whether costs can be considered when setting NAAQS. *Whitman* v. *American Trucking Ass'n,* 531 U.S. 457 (2001). In *Whitman,* the Court imbued the term with its most natural meaning: "the health of the public." *Id.,* at 466. When considering public health, EPA has looked at morbidity, including acute and chronic health effects, as well as mortality. EPA has long regulated emissions of lead air pollution due to their adverse impacts on public health (*see* section I.E. of this ANPR). Exposure to lead causes "a broad array of deleterious effects on multiple organ systems," among children and adults (AQCD for Lead, p.8–24 and Section 8.4.1). Of particular concern are the neurotoxic effects of lead in young children.[26] *See* Section II of this ANPR for a more complete overview of the public health effects of lead.

Regarding "welfare," CAA section 302(h) states that "[a]ll language referring to effects on welfare includes, but is not limited to, effects on soils, water, crops, vegetation, man-made materials, animals, wildlife, weather, visibility, and climate, damage to and deterioration of property, and hazards to transportation, as well as effects on economic values and on personal comfort and well-being, whether caused by transformation, conversion, or combination with other air pollutants." This definition is quite broad, and may include effects other than those listed here as effects on welfare. Welfare effects caused by lead have been evaluated by EPA and were the basis for establishing the secondary lead standard.[27]

By instructing the Administrator to consider whether emissions of an air pollutant cause or contribute to air pollution, the statute is clear that she need not find that emissions from any one sector or group of sources are the sole or even the major part of an air pollution problem. Moreover, section 231(a) does not contain a modifier on its use of the term contribute. Unlike some other CAA provisions, it does not require "significant" contribution.[28] Congress made it clear that the Administrator is to exercise her judgment in determining contribution, and authorized regulatory controls to address air pollution even if the air pollution problem results from a wide variety of sources. The cause or contribute test is designed to authorize EPA to identify and then address what may well be many different sectors or groups of sources that are each part of an air pollution problem.

Section 231(a)(2) refers to contribution and does not specify that the contribution must be significant before an affirmative finding can be made. Any finding of a "contribution" requires some threshold to be met; a truly trivial or *de minimis* "contribution" might not count as such. In the past, the Administrator has evaluated the emissions of the source or sources in different ways, based on the particular circumstances involved. In some mobile source rulemakings, the Administrator has used the percent of emissions from the regulated mobile source category compared to the total mobile source inventory for that air pollutant as the best way to evaluate contribution.[29] In other instances the Administrator has looked at the percent of emissions compared to the total nonattainment area inventory of the air pollution at issue.[30] EPA has found that air pollutant emissions that amount to 1.2 percent of the total inventory met the statutory test for contribution, triggering EPA's regulatory authority.[31]

2. Regulatory Authority for Emission Standards

Section 231 of the CAA sets forth EPA's authority to regulate aircraft emissions of air pollution. Section 231(a)(2)(A) requires EPA to, from time to time, issue proposed emission standards applicable to the emission of any air pollutant from any class or classes of aircraft engines which, in the Administrator's judgment, cause or contribute to air pollution which may reasonably be anticipated to endanger public health or welfare. Section 231(a)(2)(B)(i) directs EPA to consult with FAA on aircraft engine emission standards, and section 231(a)(2)(B)(ii) provides that EPA shall not change the aircraft engine emission standards if such change would significantly increase noise and adversely affect safety. Section 231(a)(3) directs EPA to issue final regulations with such modifications as the Administrator "deems appropriate."

In setting or revising standards, section 231(b) provides that EPA shall have them take effect after such period as EPA finds necessary (after consultation with the Secretary of Transportation) to permit the development and application of the requisite technology, giving appropriate consideration to the cost of compliance within such period. Section 231(c) then states that EPA's regulations regarding aircraft shall not apply if disapproved by the President, after notice and opportunity for public hearing, on the basis of a finding by DOT that such regulations would create a hazard to aircraft safety. Section 232 directs DOT to issue and implement regulations to insure compliance with EPA's standards, while section 233 pre-empts States and local governments from adopting or enforcing any aircraft emission standards that are not identical to EPA's standards.

In recently reviewing this statutory scheme, the U.S. Court of Appeals for the District of Columbia Circuit ruled that it constitutes a "both explicit and extraordinarily broad" delegation of "expansive authority to EPA to enact appropriate regulations applicable to the emissions of air pollutants from aircraft engines."[32]

3. Regulatory Authority for Fuel Standards

Section 211(c) of the CAA allows EPA to regulate fuels used in motor vehicles and nonroad vehicles or engines where emission products of the fuel either: (1) Cause or contribute to air pollution that reasonably may be anticipated to endanger public health or welfare, or (2) will impair to a significant degree the performance of any emission control device or system which is in general use, or which the Administrator finds has been developed to a point where in a reasonable time it will be in general use were such a regulation to be promulgated. This section of the CAA was used to eliminate lead from fuel used in motor vehicles. EPA's authority to regulate fuels is limited to those fuels used in motor vehicles, motor vehicle engines, or nonroad engines or vehicles, under CAA section 211(c)(1). The CAA defines "motor vehicle," "nonroad engine," and "nonroad vehicle" in section 216 for purposes of part A of title II of the CAA. Part A is also where the authority to regulate fuels under section 211 resides. However, EPA's authority to regulate aircraft resides in

[26] *See* "National Ambient Air Quality Standards for Lead" 73 FR 66970–67007 (Nov. 12, 2008).

[27] *See* "National Ambient Air Quality Standards for Lead" 73 FR 67007–67012 (Nov. 12, 2008).

[28] *See, e.g.,* CAA sections 111(b); 213(a)(2), (4).

[29] *See, e.g.,* 66 FR 5001 (January 18, 2001) (heavy duty engine and diesel sulfur rule).

[30] *See, e.g.,* 67 FR 68242 (November 8, 2002) (snowmobile rule).

[31] *Bluewater Network* v. *EPA,* 370 F.3d 1, 15 (DC Cir. 2004) (For Fairbanks, this contribution was equivalent to 1.2 percent of the total daily CO inventory for 2001).

[32] *NACAA* v. *EPA,* 489 F.3d 1221, 1229–30 (DC Cir. 2007).

part B of title II, and therefore the definitions of section 216 do not apply to aircraft. This means that aircraft are not "nonroad vehicles," and aircraft engines are not "nonroad engines." Consequently, EPA's authority to regulate fuels under section 211 does not extend to fuels used exclusively in aircraft, such as leaded avgas, that are not also used in motor vehicles or nonroad vehicles or engines (excluding fuel used in vehicles exclusively).

Instead, fuels used exclusively in aircraft engines are to be regulated by the FAA. Title 49 (49 U.S.C. 44714) requires that "the Administrator of the Federal Aviation Administration shall prescribe (1) standards for the composition or chemical or physical properties of an aircraft fuel or fuel additive to control or eliminate aircraft emissions the Administrator of the Environmental Protection Agency decides under section 231 of the Clean Air Act (42 U.S.C. 7571) endanger the public health or welfare; and (2) regulations providing for carrying out and enforcing those standards."

E. Federal Actions To Reduce Lead Exposure

The U.S. has made tremendous progress in reducing lead concentrations in the outdoor air. Nationwide, average concentrations of lead in the air have dropped 91 percent between 1980 and 2008.[33] Much of this dramatic improvement occurred as a result of the permanent phase-out of lead in motor vehicle gasoline discussed in this section of the ANPR. However, lead continues to be emitted into the air from many different types of stationary sources and piston-engine aircraft as well as certain high performance engines such as race cars.

Federal programs provide for nationwide reductions in emissions of lead and other air pollutants through several provisions in the CAA. In the early 1970s, EPA issued regulations regarding lead in gasoline in order to accomplish two purposes.[34] First, EPA issued regulations designed to ensure the availability of unleaded gasoline for use in motor vehicles equipped with emission control systems such as catalytic converters. EPA had determined that lead additives would impair to a significant degree the performance of emission control systems. Second, EPA issued regulations designed to gradually reduce the content of lead in leaded gasoline, because EPA found that lead emissions from motor vehicles presented a significant risk of harm to the health of urban population groups, especially children. Children are at a sensitive life stage with regard to the adverse health effects of lead. In 1985, EPA, noting the significant reduction in adverse health effects, mainly among pre-school age children, that would result from reductions in lead content in gasoline, promulgated additional regulations to decrease the allowable concentration of lead in gasoline for motor vehicles to 0.10 grams per gallon.[35] In 1990 Congress added section 211(n) to the CAA which provides that after December 31, 1995, it shall be unlawful to sell any gasoline for use in any motor vehicle which contains lead or lead additives. In 1996, EPA incorporated the CAA statutory ban on gasoline containing lead or lead additives for highway use into the Agency's existing regulations on the lead content of gasoline.[36] In this regulation, it was noted that the petroleum industry may continue to make and market gasoline produced with lead additives for all remaining uses, including use as fuel in aircraft, racing cars, and nonroad engines such as farm equipment engines and marine engines, to the extent otherwise allowed by law.[37]

In fact, there have been no regulatory limits placed on the production and consumption of leaded avgas, and, as noted in Section I.A of this ANPR, emissions of lead from piston-engine aircraft account for an increasing fraction of the lead emissions to air (*e.g.,* accounting for approximately half the national inventory of lead emission in 2005). This is in spite of the decrease in the supply of leaded avgas nationally from 374 million gallons (875 tons of lead) in 1990 to 235 million gallons (550 tons of lead) in 2008.[38] The decrease in fuel consumption is attributed to the decrease in piston-engine aircraft activity over that time period and not due to a shift to unleaded fuel. There are over 200,000 piston-engine aircraft in the U.S. that continue to consume leaded avgas and approximately 2,000 new piston-engine aircraft requiring leaded avgas are manufactured annually. Projected growth for this industry is discussed in Section III.B.

Significant reductions in emission of lead from stationary sources have been achieved between 1985 and 2002, totaling almost 2,000 tons of lead.[39] Regulations promulgated in 1995, 1997 and 1999 controlled emissions of lead from primary and secondary lead smelters, contributing to these reductions.[40] [41] [42] Currently, metal industry emissions of lead comprise 23% of the national inventory (298 tons). Additional reductions in the emission of lead have been accomplished through controls on waste incineration and other stationary sources.[43] [44] [45] These standards have been set at "maximum achievable control technology" (MACT) levels, and under CAA sections 112 and 129 EPA must revisit these standards in the future to determine whether they are sufficiently stringent to provide an ample margin of safety to protect public health and prevent an adverse environmental effect.

As lead is a multimedia pollutant, a broad range of Federal programs beyond those that focus on air pollution control provide for nationwide reductions in environmental releases and human exposures. In addition, the U.S. Centers for Disease Control and Prevention (CDC) programs provide for the tracking of children's blood lead levels nationally and provide guidance on levels at which medical and environmental case management activities should be implemented.[46] [47] In

[33] *See http://www.epa.gov/airtrends/lead.html.*

[34] "Regulation of Fuels and Fuel Additives" 38 FR 1254 (Dec. 4, 1973).

[35] "Regulation of Fuels and Fuel Additives; Gasoline Lead Content" 50 FR 9386 (March 7, 1985).

[36] "Prohibition on Gasoline Containing Lead or Lead Additives for Highway Use" 61 FR 3832 (Feb. 2, 1996).

[37] "Prohibition on Gasoline Containing Lead or Lead Additives for Highway Use" 61 FR 3834 (Feb. 2, 1996).

[38] These fuel volume estimates are from the Department of Energy Information Administration. *http://tonto.eia.doe.gov/dnav/pet/hist/mgaupus1A.htm.*

[39] U.S. Environmental Protection Agency (2008) EPA's Report on the Environment EPA/600/R–07/045F. Available at: *http://www.epa.gov/roe/.*

[40] "National Emission Standards for Hazardous Air Pollutants From Secondary Lead Smelting" 60 FR 32587 (June 23, 1995).

[41] "National Emission Standards for Hazardous Air Pollutants From Secondary Lead Smelting" 62 FR 32209 (June 13, 1997).

[42] "National Emission Standards for Hazardous Air Pollutants for Primary Lead Smelting" 64 FR 30194 (June 4, 1999).

[43] "Standards of Performance for New Stationary Sources and Emission Guidelines for Existing Sources: Municipal Waste Combustors" 60 FR 65387 (Dec. 19, 1995).

[44] "Emission Guidelines for Existing Sources and Standards of Performance for New Stationary Sources" 62 FR 45124 (Aug. 25, 1997).

[45] "Standards of Performance for New Stationary Sources and Emission Guidelines for Existing Sources: Large Municipal Waste Combustors" 71 FR 27324–27348 (May 10, 2006).

[46] Centers for Disease Control and Prevention (2005) Preventing lead poisoning in young children: a statement by the Centers for Disease Control and Prevention. Atlanta, GA: U.S. Department of Health and Human Services, Public Health Service. August.

[47] Advisory Committee on Childhood Lead Poisoning Prevention (2007) Interpreting and managing blood lead levels <10 µg/dL in children and reducing childhood exposures to lead:

1991, the Secretary of the U.S. Department of Health and Human Services (HHS) characterized lead poisoning as the "number one environmental threat to the health of children in the United States."[48] In 1997, President Clinton created, by Executive Order 13045, the President's Task Force on Environmental Health Risks and Safety Risks to Children in response to increased awareness that children face disproportionate risks from environmental health and safety hazards (62 FR 19885).[49] By Executive Orders issued in October 2001 and April 2003, President Bush extended the work for the Task Force for an additional three and a half years beyond its original charter (66 FR 52013 and 68 FR 19931). The Task Force set a Federal goal of eliminating childhood lead poisoning by the year 2010, and reducing lead poisoning in children was identified as the Task Force's top priority.

Federal abatement programs provide for the reduction in human exposures and environmental releases from in-place materials containing lead (*e.g.,* lead-based paint, urban soil and dust, and contaminated waste sites). Federal regulations on disposal of lead-based paint waste help facilitate the removal of lead-based paint from residences (68 FR 36487). Further, in 1991, EPA lowered the maximum levels of lead permitted in public water systems from 50 parts per billion (ppb) to 15 ppb measured at the consumer's tap (56 FR 26460).

Federal programs to reduce exposure to lead in paint, dust, and soil are specified under the comprehensive Federal regulatory framework developed under the Residential Lead-Based Paint Hazard Reduction Act (Title X). Under Title X and Title IV of the Toxic Substances Control Act (TSCA), EPA has established regulations and associated programs with the goal of reducing exposure to lead via lead-based paint. For example, under Title IV of TSCA, EPA established standards identifying hazardous levels of lead in residential paint, dust, and soil in 2001. On March 31, 2008, the Agency issued a new rule (73 FR 21692) to further protect children from lead-based paint hazards resulting from renovation and repair work occurring in housing in which they live.

Programs associated with the Comprehensive Environmental Response, Compensation, and Liability Act (CERCLA or Superfund) and Resource Conservation Recovery Act (RCRA) also implement abatement programs, reducing exposures to lead and other pollutants. For example, EPA determines and implements protective levels for lead in soil at Superfund sites and RCRA corrective action facilities. Federal programs, including those implementing RCRA, provide for management of hazardous substances in hazardous and municipal solid waste.[50] Federal regulations concerning batteries in municipal solid waste control the collection and recycling or proper disposal of batteries containing lead.[51] Similarly, Federal programs provide for the reduction in environmental releases of hazardous substances such as lead in the management of wastewater.[52]

A variety of Federal nonregulatory programs also provide for reduced environmental release of lead-containing materials through voluntary measures and more general encouragement of pollution prevention, promotion of reuse and recycling, reduction of priority and toxic chemicals in products and waste, and conservation of energy and materials. These include the voluntary partnership between EPA and the National Association for Stock Car Auto Racing (NASCAR) which has achieved the goal of removing alkyl lead (organic forms of lead) from racing fuels used in the Nextel Cup, Busch and Craftsman Truck Series.[53] Other programs include the Resource Conservation Challenge,[54] the National Waste Minimization Program,[55] "Plug in to eCycling" (a partnership between EPA and consumer electronics manufacturers and retailers),[56] and activities to reduce the practice of backyard trash burning.[57]

In addition to the lead control programs summarized above, EPA's research program, with other Federal agencies, identifies, encourages and conducts research needed to locate and assess serious risks and to develop methods and tools to characterize and help reduce risks. For example, EPA's Integrated Exposure Uptake Biokinetic Model for Lead in Children (IEUBK model) and the Adult Lead Methodology are widely used and accepted as tools that provide guidance in evaluating site specific data. More recently, in recognition of the need for a single model that predicts lead concentrations in tissue for children and adults, EPA is developing the All Ages Lead Model (AALM) to provide researchers and risk assessors with a pharmacokinetic model capable of estimating blood, tissue, and bone concentrations of lead based on estimates of exposure over the lifetime of the individual. EPA research activities on substances including lead focus on better characterizing aspects of health and environmental effects, exposure, and control or management of environmental releases.[58]

II. Health and Welfare Effects of Lead

A. Multimedia and Multi-Pathway Exposure Considerations

This section briefly summarizes the information presented in the 2008 NAAQS for Lead,[59] the 2007 Lead Staff Paper[60] and the 2006 Air Quality Criteria Document for Lead (AQCD for Lead).[61] Lead is an unusual pollutant in that the distribution of lead to different environmental media (*e.g.,* air, soil, water) is important for evaluating public health and welfare effects. Lead emitted to the air can result in exposure via multiple pathways (*e.g.,* inhalation, ingestion, dermal absorption). Some key multimedia and multi-pathway considerations for lead include the following:

(1) Lead is emitted into the air from many sources encompassing a wide

Recommendations of CDC's Advisory Committee on Childhood Lead Poisoning Prevention. Morbidity and Mortality Weekly Report. 56(RR–8). November 2, 2007.

[48] Alliance to End Childhood Lead Poisoning (1991) The First Comprehensive National Conference; Final Report. October 6, 7, 8, 1991.

[49] Co-chaired by the Secretary of the HHS and the Administrator of the EPA, the Task Force consisted of representatives from 16 Federal departments and agencies.

[50] *See, e.g.,* 66 FR 58258.

[51] *See, e.g.,* "Implementation of the Mercury-Containing and Rechargeable Battery Management Act" *http://www.epa.gov/epaoswer/hazwaste/recycle/battery.pdf* and "Municipal Solid Waste Generation, Recycling, and Disposal in the United States: Facts and Figures for 2005" *http://www.epa.gov/epaoswer/osw/conserve/resources/msw-2005.pdf.*

[52] *http://www.epa.gov/owm/.*

[53] U.S. Environmental Protection Agency Persistent, Bioaccumulative, and Toxic Pollutants (PBT) Program (2002) PBT national action plan for alkyl-Pb. Washington, DC. Available online at: *http://www.epa.gov/pbt/pubs/Alkyl_lead_action_plan_final.pdf.*

[54] *http://www.epa.gov/epawaste/rcc/index.htm.*

[55] *http://www.epa.gov/epawaste/hazard/wastemin/.*

[56] *http://www.epa.gov/epawaste/partnerships/plugin/index.htm.*

[57] *http://www.epa.gov/epawaste/nonhaz/municipal/backyard/index.htm.*

[58] *http://www.epa.gov/ord/.*

[59] National Ambient Air Quality Standards for Lead 73 FR 66970–67007 (Nov. 12, 2008) Section II.A.

[60] U.S. Environmental Protection Agency Review of the National Ambient Air Quality Standards for Lead: Policy Assessment of Scientific and Technical Information OAQPS Staff Paper (2007) Chapter 2. EPA–452/R–07–013 November.

[61] U.S. Environmental Protection Agency Air Quality Criteria for Lead (2006) Volume I: Chapters 2 & 3. EPA/600/R–5/144aF. October.

variety of stationary and mobile source types. Lead emitted to the air is predominantly in particulate form, with the particles occurring in various sizes. Once emitted, the particles can be transported long or short distances depending on their size, which influences the amount of time spent in the aerosol phase. In general, larger particles tend to deposit more quickly, within shorter distances from emissions points (*e.g.,* kilometers), while smaller particles will remain in the aerosol phase and travel longer distances before depositing (*e.g.,* hundreds to thousands of kilometers).[62] As summarized in the AQCD for Lead, airborne concentrations of lead at sites near sources are much higher than at sites not known to be directly influenced by sources.

(2) Once deposited to surfaces, lead can subsequently be resuspended into the ambient air and, because of the persistence of lead, emissions of this metal contribute to environmental media concentrations for many years into the future as it is cycled within and between environmental media such as soil, air and water. Lead that is a soil or dust contaminant today may have been airborne yesterday or many years ago.[63]

(3) Exposure to lead emitted into the ambient air can occur directly by inhalation, or indirectly by ingestion of lead-contaminated food, water or other materials including dust and soil. This occurs due to the environmental cycling of this persistent metal which, once emitted into the ambient air is distributed to other environmental media and can contribute to human exposures via indoor and outdoor dusts, outdoor soil, food and drinking water, as well as inhalation of air. Atmospheric deposition is estimated to comprise a significant proportion of lead in food (AQCD for Lead, p. 3–48). For example, livestock may be exposed to lead in vegetation (*e.g.,* grasses and silage) and in surface soils via incidental ingestion of soil while grazing (USEPA 1986, Section 7.2.2.2.2).[64] And dietary intake may be a predominant source of lead exposure among adults, greater than consumption of water and beverages or inhalation (73 FR 66971). These exposure pathways are described more fully in Section 8.2.2 of the AQCD for Lead.

(4) Air-related exposure pathways are affected by changes to air quality, including changes in concentrations of lead in air and changes in atmospheric deposition of lead. Further, because of its persistence in the environment, lead deposited from the air may contribute to human and ecological exposures for years into the future as described above.

Additionally, human exposures to lead include pathways that are not related to ambient air concentrations. The pathways of human exposure to lead that are not air-related include ingestion of indoor lead paint,[65] lead in diet as a result of inadvertent additions during food processing, and lead in drinking water attributable to lead in distribution systems, as well as other generally less prevalent pathways, as described in the AQCD for Lead (pp. 3–50 to 3–51).

B. Health Effects Information

In 2008, EPA decreased the level of the primary (health-based) NAAQS for Lead from 1.5 $\mu g/m^3$ to 0.15 $\mu g/m^3$ in order to provide increased protection for children and other at-risk populations against an array of adverse health effects, most notably neurological effects in children, including neurocognitive and neurobehavioral effects.[66] This section summarizes information provided in the numerous recent documents summarizing health and welfare effects from exposure to lead, including the AQCD for Lead, CDC documents, the EPA Staff Paper[67] and the proposed and final NAAQS for Lead. First, the use of blood lead as a measure of exposure to lead is described followed by a brief summary of the broad array of lead-induced health effects. Particular focus is given here to the effects of lead on the developing nervous system in children since this is among the most sensitive endpoints identified for this toxic metal. The section ends with a description of at-risk populations and life stages.

1. Blood Lead

Lead enters the body most commonly via the respiratory system and/or gastrointestinal tract, from which it is quickly absorbed into the blood stream and distributed throughout the body.[68] Less commonly, lead, particularly organic forms of lead such as alkyl lead, can be absorbed through the skin (AQCD for Lead, page 4–12). Blood lead levels are extensively used as an index or biomarker of exposure by national and international health agencies, as well as in epidemiological (AQCD for Lead, Sections 4.3.1.3 and 8.3.2) and toxicological studies of lead health effects and dose-response relationships (AQCD for Lead, Chapter 5). The U.S. CDC, and its predecessor agencies, has for many years used blood lead level as a metric for identifying children at risk of adverse health effects and for specifying particular public health recommendations.[69] Most recently, in 2005, with consideration of a review of the evidence by their advisory committee, CDC revised their statement on Preventing Lead Poisoning in Young Children.[70] CDC specifically recognized the evidence of adverse health effects in children with blood lead levels below 10 µg/dL,[71] the data demonstrating that no "safe" threshold for blood lead had been identified, and emphasized the importance of preventative measures.[72]

Since 1976, the CDC has been monitoring blood lead levels in multiple age groups nationally through the National Health and Nutrition Examination Survey (NHANES).[73] The

[62] U.S. Environmental Protection Agency (2004) Air quality criteria for particulate matter. Research Triangle Park, NC: Office of Research and Development, National Center for Environmental Assessment; EPA report no. EPA–600/P–99/0028aF.

[63] National Ambient Air Quality Standards for Lead 73 FR 66971 (Nov. 12, 2008), AQC for Lead, Section 2.5.

[64] U.S. Environmental Protection Agency (1986) Air quality criteria for lead. Research Triangle Park, NC: Office of Health and Environmental Assessment, Environmental Criteria and Assessment Office; EPA report no. EPA–600/8–83/028aF–dF. 4v. Available from: NTIS, Springfield, VA; PB87–142378.

[65] Weathering of outdoor lead paint may also contribute to soil lead levels adjacent to the house.

[66] National Ambient Air Quality Standards for Lead 73 FR 66965 (Nov. 12, 2008).

[67] U.S. Environmental Protection Agency (2007) Review of the National Ambient Air Quality Standards for Lead: Policy Assessment of Scientific and Technical Information, OAQPS Staff Paper. EPA–452/R–07–013. Office of Air Quality Planning and Standards, Research Triangle Park.

[68] Additionally, lead freely crosses the placenta resulting in continued fetal exposure throughout pregnancy, with that exposure increasing during the latter half of pregnancy (AQC for Lead, Section 6.6.2).

[69] Centers for Disease Control (1991) Preventing lead poisoning in young children: a statement by the Centers for Disease Control. Atlanta, GA: U.S. Department of Health and Human Services, Public Health Service; October 1. Available online at: *http://wonder.cdc.gov/wonder/prevguid/p0000029/p0000029.asp.*

[70] Centers for Disease Control and Prevention (2005) Preventing lead poisoning in young children: a statement by the Centers for Disease Control and Prevention. Atlanta, GA: U.S. Department of Health and Human Services, Public Health Service. August.

[71] As described by the Advisory Committee on Childhood Lead Poisoning Prevention, "In 1991, CDC defined the blood lead level (BLL) that should prompt public health actions as 10 µg/dL. Concurrently, CDC also recognized that a BLL of 10 µg/dL did not define a threshold for the harmful effects of lead. Research conducted since 1991 has strengthened the evidence that children's physical and mental development can be affected at BLLS <10 µg/dL" (ACCLPP, 2007).

[72] Advisory Committee on Childhood Lead Poisoning Prevention (2007) Interpreting and managing blood lead levels <10 µg/dL in children and reducing childhood exposures to lead: Recommendations of CDC's Advisory Committee on Childhood Lead Poisoning Prevention. Morbidity and Mortality Weekly Report. 56(RR–8). November 2, 2007.

[73] This information documents a variation in mean blood lead levels across the various age groups monitored. For example, mean blood lead

NHANES information has documented the dramatic decline in mean blood lead levels in the U.S. population that has occurred since the 1970s and that coincides with regulations regarding leaded motor vehicle fuels, leaded paint, and lead-containing plumbing materials that have reduced lead exposure among the general population (AQCD for Lead, Sections 4.3.1.3 and 8.3.3).

While blood lead levels in the U.S. general population, including geometric mean levels in children aged 1–5 have declined significantly, levels have been found to vary among children of different socioeconomic status (SES) and other demographic characteristics (AQCD for Lead, p. 4–21), as well as by age.[74] Racial/ethnic and income disparities in blood lead levels in children persist. For example, blood lead levels for lower income and African American children are higher than those for the general population.

The spectrum of health effects discussed in the following section is relevant for all forms of lead that enter the blood stream. Once in the blood stream, lead bioaccumulates in the body, with the bone serving as a large, long-term storage compartment. Soft tissues (*e.g.,* kidney, liver, brain, *etc.*) serve as smaller compartments, in which lead may be more mobile (AQCD for Lead, Sections 4.3.1.4 and 8.3.1). During childhood development, bone represents approximately 70% of a child's body burden of lead, and this accumulation continues through adulthood, when more than 90% of the total lead body burden is stored in the bone (AQCD for Lead, Section 4.2.2). Lead in bone can be mobilized during critical periods including pregnancy and lactation (AQCD for Lead, Section 5.8.6).

2. Health Effects

Lead, as with mercury and arsenic, has no known biological function.[75] Lead has been demonstrated to exert "a broad array of deleterious effects on multiple organ systems via widely diverse mechanisms of action" (AQCD for Lead, p. 8–24 and Section 8.4.1). This array of health effects includes effects on heme biosynthesis and related functions; neurological development and function; reproduction and physical development; kidney function; cardiovascular function; and immune function. The weight of evidence varies across this array of effects and is comprehensively described in the AQCD for Lead. There is also some evidence of lead carcinogenicity, primarily from animal studies, together with limited human evidence of suggestive associations (AQCD for Lead, Sections 5.6.2, 6.7, and 8.4.10). The U.S. EPA has listed lead under current EPA guidelines as a probable human carcinogen based on the available animal data (AQCD for Lead, p. 6–195).[76] Inorganic lead has been classified as a probable human carcinogen by the International Agency for Research on Cancer (inorganic lead compounds), based mainly on sufficient animal evidence,[77] and classified as reasonably anticipated to be a human carcinogen by the U.S. National Toxicology Program (lead and lead compounds) (AQCD for Lead, Section 6.7.2).[78] [79]

As described in the AQCD for Lead, the key effects associated with individual blood lead levels in children and adults in the range of 10 μg/dL and lower include neurological, hematological and immune[80] effects for children, and hematological, cardiovascular and renal effects for adults (AQCD for Lead, Tables 8–5 and 8–6, pp. 8–60 to 8–62). As evident from the discussions in Chapters 5, 6 and 8 of the AQCD for Lead, "neurotoxic effects in children and cardiovascular effects in adults are among those best substantiated as occurring at blood lead concentrations as low as 5 to 10 μg/dL (or possibly lower); and these categories are currently clearly of greatest public health concern" (AQCD for Lead, p. 8–60).[81] [82] The AQCD for Lead states, "There is no level of lead exposure that can yet be identified, with confidence, as clearly not being associated with some risk of deleterious health effects" (AQCD for Lead, p. 8–63).

While adults are susceptible to lead effects at lower blood lead levels than previously understood (*e.g.,* AQCD for Lead, p. 8–25), among the wide variety of health endpoints associated with lead exposures, there is general consensus that the developing nervous system in children is among the, if not the, most sensitive. Blood lead levels in U.S. children have decreased notably since the late 1970s. Studies evaluating current blood lead levels in children have reported associations with neurodevelopment effects (AQCD for Lead, Chapter 6). Functional manifestations of lead neurotoxicity during childhood include sensory, motor, cognitive and behavioral impacts. Numerous epidemiological studies have reported neurocognitive, neurobehavioral, sensory, and motor function effects in children with blood lead levels below 10 μg/dL (AQCD Lead, Sections 6.2 and 8.4).

Cognitive effects associated with lead exposures that have been observed in epidemiological studies have included decrements in intelligence test results, such as the widely used IQ score, and in academic achievement as assessed by various standardized tests as well as by class ranking and graduation rates (AQCD for Lead, Section 6.2.16 and pp 8–29 to 8–30). As noted in the AQCD for Lead with regard to the latter, "Associations between lead exposure and academic achievement observed in the above-noted studies were significant even after adjusting for IQ, suggesting that lead-sensitive neuropsychological processing and learning factors not

levels in 2001–2002 for ages 1–5, 6–11, 12–19 and greater than or equal to 20 years of age, are 1.70, 1.25, 0.94, and 1.56 μg/dL, respectively (AQC for Lead, p. 4–22).

[74] Axelrad, D., U.S. EPA (November 4, 2009) E-mail message to Marion Hoyer, U.S. EPA. Available in docket number EPA–HQ–OAR–2007–0294.

[75] U.S. Environmental Protection Agency (2007) Framework for Metals Risk Assessment. Office of the Science Advisor. EPA 120/R–07/001.

[76] U.S. Environmental Protection Agency, Integrated Risk Information System (IRIS) (1993) IRIS Summary for Lead and compounds (CASRN 7439–92–1), Available online at: *http://www.epa.gov/ncea/iris/subst/0277.htm.*

[77] International Agency for Research on Cancer (IARC) (2006) Inorganic and organic lead compounds. Lyon, France: International Agency for Research on Cancer. IARC monographs on the evaluation of the carcinogenic risk of chemicals to humans: volume 87. Available online at: *http://monographs.iarc.fr/ENG/Monographs/vol87/index.php.*

[78] National Toxicology Program (2003) Report on carcinogens background document for lead and lead compounds. Research Triangle Park, NC: U.S. Department of Health and Human Services. Available online at: *http://ntp.niehs.nih.gov/ntp/newhomeroc/roc11/Lead-Public.pdf.*

[79] National Toxicology Program. (2004) Lead (CAS no. 7439–92–1) and lead compounds. In: Report on carcinogens, eleventh edition. Research Triangle Park, NC: U.S. Department of Health and Human Services. Available online at: *http://ntp.niehs.nih.gov/ntp/roc/eleventh/profiles/s101lead.pdf.*

[80] At mean blood lead levels, in children, on the order of 10 μg/dL, and somewhat lower, associations have been found with effects to the immune system, including altered macrophage activation, increased IgE levels and associated increased risk for autoimmunity and asthma (AQC for Lead, Sections 5.9, 6.8, and 8.4.6).

[81] With regard to blood lead levels in individual children associated with particular neurological effects, the AQC for Lead states "Collectively, the prospective cohort and cross-sectional studies offer evidence that exposure to lead affects the intellectual attainment of preschool and school age children at blood lead levels <10 μg/dL (most clearly in the 5 to 10 μg/dL range, but, less definitively, possibly lower)." (p. 6–269)

[82] Epidemiological studies have consistently demonstrated associations between lead exposure and enhanced risk of deleterious cardiovascular outcomes, including increased blood pressure and incidence of hypertension. A meta-analysis of numerous studies estimates that a doubling of blood-lead level (*e.g.,* from 5 to 10 μg/dL) is associated with ~1.0 mm Hg increase in systolic blood pressure and ~0.6 mm Hg increase in diastolic pressure (AQC for Lead, p. E–10).

reflected by global intelligence indices might contribute to reduced performance on academic tasks" (AQCD for Lead, pp 8–29 to 8–30).

With regard to potential implications of lead effects on IQ, the AQCD for Lead recognizes the "critical" distinction between population and individual risk, identifying issues regarding declines in IQ for an individual and for the population. The AQCD for Lead further states that a "point estimate indicating a modest mean change on a health index at the individual level can have substantial implications at the population level" (AQCD for Lead, p. 8–77).[83] A downward shift in the mean IQ value is associated with both substantial decreases in percentages achieving very high scores and substantial increases in the percentage of individuals achieving very low scores (AQCD for Lead, p. 8–81).[84] For an individual functioning in the low IQ range due to the influence of developmental risk factors other than lead, a lead-associated IQ decline of several points might be sufficient to drop that individual into the range associated with increased risk of educational, vocational, and social failure (AQCD for Lead, p. 8–77).

Other cognitive effects observed in studies of children have included decrements in attention, executive functions, language, memory, learning and visuospatial processing (AQCD for Lead, Sections 5.3.5, 6.2.5 and 8.4.2.1), with attention and executive function effects associated with lead exposures indexed by blood lead levels below 10 μg/dL (AQCD for Lead, Section 6.2.5 and pp. 8–30 to 8–31). The evidence for the role of lead in this suite of effects includes experimental animal findings (discussed in the AQCD for Lead, Section 8.4.2.1; p. 8–31), which provide strong biological plausibility of lead effects on learning ability, memory and attention (AQCD for Lead, Section 5.3.5), as well as associated mechanistic findings.

The persistence of such lead-induced effects is described in the AQCD for Lead (*e.g.,* AQCD for Lead Sections 5.3.5, 6.2.11, and 8.5.2). The persistence or irreversibility of such effects can be the result of damage occurring without adequate repair offsets or of the persistence of lead in the body (AQCD for Lead, Section 8.5.2). It is additionally important to note that there may be long-term consequences of such deficits over a lifetime. Poor academic skills and achievement can have "enduring and important effects on objective parameters of success in real life," as well as increased risk of antisocial and delinquent behavior (AQCD for Lead, Section 6.2.16).

The current evidence reviewed in the AQCD for Lead with regard to the quantitative relationship between neurocognitive decrement, such as IQ, and blood lead levels indicates that the slope for lead effects on IQ is nonlinear and is steeper at lower blood lead levels, such that each μg/dL increase in blood lead may have a greater effect on IQ at lower blood lead levels (*e.g.,* below 10 μg/dL) than at higher levels (AQCD for Lead, Section 6.2.13; pp. 8–63 to 8–64; Figure 8–7). As noted in the AQCD for Lead, a number of examples of non- or supralinear dose-response relationships exist in toxicology (AQCD for Lead, pp. 6–76 and 8–38 to 8–39). With regard to the effects of lead on neurodevelopmental outcomes such as IQ, the AQCD for Lead suggests that initial neurodevelopmental effects at lower lead levels may be disrupting very different biological mechanisms (*e.g.,* early developmental processes in the central nervous system) than more severe effects of high exposures that result in symptomatic lead poisoning and frank mental retardation (AQCD for Lead, p. 6–76). The AQCD for Lead describes this issue in detail with regard to lead (summarized in AQCD for Lead at p. 8–39). Various findings within the toxicological evidence, presented in the AQCD for Lead, provide biologic plausibility for a steeper IQ loss at low blood lead levels, with a potential explanation being that the predominant mechanism at very low blood lead levels is rapidly saturated and that a different, less-rapidly-saturated process becomes predominant at blood lead levels greater than 10 μg/dL.

3. At-Risk Populations and Life Stages

Individuals potentially at risk from exposure to environmental pollutants include those with increased susceptibility and vulnerability. The terms "susceptibility" and "vulnerability" have been used to characterize those with a greater likelihood of an adverse outcome given a specific exposure in comparison with the general population. This increased likelihood of response to a pollutant can result from a multitude of factors, including genetic or developmental factors, life stages (*i.e.,* childhood or old age), gender differences, or preexisting disease states. In addition, new attention has been paid to the concept of some population groups having increased responses to pollution-related effects due to factors including socioeconomic status (SES) (*e.g.,* reduced access to health care, poor nutritional status) or particularly elevated exposure levels.

EPA uses the term "life stage" to refer to a distinguishable time frame in an individual's life characterized by unique and relatively stable behavioral and/or physiological characteristics that are associated with development and growth. To recognize the rapid changes that occur during childhood related to physiology, metabolism, anatomy and behavior that can impact exposure and risk to environmental hazards, EPA now views childhood as a sequence of life stages, from conception through fetal development, infancy, and adolescence. EPA published several exposure and risk assessment guidance documents beginning in 2005,[85] [86] [87] in which we emphasized the importance of considering the potential for increased sensitivity of different life stages or age groups in addition to that of groups that form a fixed portion of the population based on characteristics such as pre-existing disease, gender, socioeconomic status, geographical location, culture/ethnicity, or genetic make-up.

Physiological, behavioral and demographic factors contribute to increased risk of lead-related health effects. Children are at increased risk of lead-related health effects due to various factors that enhance their exposures (*e.g.,* via the hand-to-mouth activity that is prevalent in very young children, AQCD for Lead, Section 4.4.3) and susceptibility. While children are considered to be at a period of maximum exposure around 18–27 months, the current evidence has found even stronger associations between blood lead levels at school age and IQ at school age. The evidence "supports the idea that lead exposure continues to be toxic to children as they reach school age, and [does] not lend support to the interpretation that all the damage is done by the time the child reaches 2 to

[83] As an example, the AQC for Lead states "although an increase of a few mmHg in blood pressure might not be of concern for an individual's well-being, the same increase in the population mean might be associated with substantial increases in the percentages of individuals with values that are sufficiently extreme that they exceed the criteria used to diagnose hypertension" (AQC for Lead, p. 8–77).

[84] For example, for a population mean IQ of 100 (and standard deviation of 15), 2.3% of the population would score above 130, but a shift of the population to a mean of 95 results in only 0.99% of the population scoring above 130 (AQC for Lead, pp. 8–81 to 8–82).

[85] U.S. EPA (2005) Guidance on Selecting Age Groups for Monitoring and Assessing Childhood Exposure to Environmental Contaminants. EPA/630/P–03/003F.

[86] U.S. EPA (2006) A Framework for Assessing Health Risks of Environmental Exposures to Children. EPA/600/R–05/093A.

[87] U.S. EPA (2008) Child-Specific Exposure Factors Handbook. EPA/600/R–06/096F.

3 years of age" (AQCD for Lead, Section 6.2.12). Physiological factors that can affect risk of lead-related effects in children include genetic polymorphisms and nutritional status. Children with particular genetic polymorphisms (*e.g.,* presence of the δ-aminolevulinic acid dehydratase-2 [ALAD–2] allele) have increased sensitivity to lead toxicity, which may be due to increased susceptibility to the same internal dose and/or to increased internal dose associated with the same exposure (AQCD for Lead, p. 8–71, Sections 6.3.5, 6.4.7.3 and 6.3.6). Some children may have blood lead levels higher than those otherwise associated with a given lead exposure (AQCD for Lead, Section 8.5.3) as a result of nutritional status (*e.g.,* iron deficiency, calcium intake), as well as genetic and other factors (AQCD for Lead, Chapter 4 and Sections 3.4, 5.3.7 and 8.5.3).

Demographic factors that can affect risk of lead-related effects in children include residential location, poverty, and race. As noted in previous EPA actions on lead, situations of elevated exposure, such as residing near sources of ambient lead, as well as socioeconomic factors, such as reduced access to health care or low socioeconomic status can also contribute to increased blood lead levels and increased risk of associated health effects from air-related lead.[88] Additionally, as described in the NAAQS for Lead, children in poverty and black, non-Hispanic children have notably higher blood lead levels than do economically well-off children and white children, in general.[89]

C. Welfare Effects

Lead is persistent in the environment and accumulates in soils, aquatic systems (including sediments), and some biological tissues of plants, animals and other organisms, thereby providing long-term, multi-pathway exposures to organisms and ecosystems. In 2008, EPA established a secondary lead standard of 0.15 ug/m^3. This standard is intended to protect the public welfare from known or anticipated adverse effects associated with the presence of lead in the ambient air. This section provides a summary of information regarding welfare effects of lead, focusing on terrestrial and aquatic ecosystems. This information is largely drawn from the 2006 AQCD for Lead, Chapter 6 of the Office of Air Quality Planning and Standards Staff Paper on Lead (SP)[90] and the Lead NAAQS.

1. Terrestrial Ecosystems

Lead is removed from the atmosphere and deposited on soil and other surfaces via wet or dry deposition. In soils, most lead is retained via the formation of stable solid phase compounds, precipitates, or complexes with organic matter. Thus, terrestrial ecosystems remain primarily sinks for lead but amounts retained in various soil layers vary based on forest type, climate, and litter cycling (AQCD for Lead, Section 7.1). Once in the soil, the migration and distribution of lead is controlled by a multitude of factors including pH, precipitation, litter composition and other factors, which in turn, govern the rate at which lead is bound to organic materials in the soil (AQCD for Lead, Section 2.3.5, and Section AX 7.1.4.1).

Lead exists in the environment in different forms which vary widely in their ability to cause adverse effects on ecosystems and organisms. Many forms of lead in the ambient air are quite insoluble and thus not easily leached to underground water once deposited to surfaces. However, leaching may occur under acidic conditions, where lead concentrations are extremely high, or in the presence of substances (*e.g.,* soluble organic matter, high concentrations of chlorides or sulfates) that form relatively soluble complexes with lead (AQCD for Lead, Section 2.3.5).

Plants take up lead via their foliage and through their root systems. The rate of plant uptake from soil varies by plant species, soil conditions, and lead species. Most lead in plants is stored in roots, and very little is stored in fruits. Metals that are applied to soil as salts (usually as sulfate, chloride, or nitrate salt) are accumulated more readily than the same quantity of metal added via sewage sludge, flue dust, or fly ash (AQCD for Lead, Section 2.3.7).

Surface deposition of lead onto plants may represent a significant contribution to the total lead in and on the plant, as has been observed for plants near smelters and along roadsides (AQCD for Lead, page E–19). Atmospheric deposition of lead also contributes to lead in vegetation as a result of contact with above-ground portions of the plant (AQCD for Lead, pp. 7–9 and AXZ7–39; USEPA, 1986, Sections 6.5.3 and 7.2.2.2.1). Wildlife may subsequently be exposed to lead in vegetation (*e.g.,* grasses and silage) and in surface soils via incidental ingestion of soil while grazing (USEPA 1986, Section 7.2.2.2.2).[91]

By far, the majority of air-related lead found in natural terrestrial ecosystems was deposited in the past during the use of lead additives in motor vehicle gasoline. Many sites receiving lead predominantly through long-range transport of gasoline-derived small particles have accumulated large amounts of lead in soils (AQCD for Lead, p. AX7–98). There is little evidence that terrestrial sites exposed as a result of this long range transport of lead have experienced significant effects on ecosystem structure or function (AQCD for Lead, Section AX7.1.4.2 and p. AX7–98). Strong complexation of lead by organic matter in soil may explain why few ecological effects have been observed (AQCD for Lead, p. AX7–98). Studies have shown decreasing levels of lead in vegetation, which appears to correlate with decreases in atmospheric deposition of lead resulting from the removal of lead additives to motor vehicle gasoline (AQCD for Lead, Section AX 7.1.4.2).

The deposition of gasoline-derived lead into forest soils has produced a legacy of slow moving lead that remains bound to organic materials despite dramatic reductions in the use of leaded additives to motor vehicle fuels. Current levels of lead in soil vary widely depending on the source of lead but in all ecosystems lead concentrations exceed natural background levels. For areas influenced by point sources of air lead, concentrations of lead in soil may exceed by many orders of magnitude the concentrations which are considered harmful to laboratory organisms. Adverse effects in terrestrial organisms associated with lead include neurological, physiological and behavioral effects which may influence ecosystem structure and functioning (73 FR 67008).

2. Aquatic Ecosystems

Atmospheric lead enters aquatic ecosystems primarily through deposition (wet and dry) and the erosion and runoff of soils containing lead. While overall deposition rates of atmospheric lead have decreased dramatically since the removal of lead additives from motor vehicle gasoline,

[88] U.S. Environmental Protection Agency (2007) Review of the National Ambient Air Quality Standards for Lead: Policy Assessment of Scientific and Technical Information, OAQPS Staff Paper. EPA–452/R–07–013. Office of Air Quality Planning and Standards, Research Triangle Park.

[89] *See* 73 FR 66973 (November 12, 2008).

[90] U.S. Environmental Protection Agency (2007) Review of the National Ambient Air Quality Standards for Lead: Policy Assessment of Scientific and Technical Information, OAQPS Staff Paper. EPA–452/R–07–013. Office of Air Quality Planning and Standards, Research Triangle Park.

[91] U.S. Environmental Protection Agency (1986) Air quality Criteria for Lead. Research Triangle Park, NC: Office of Health and Environmental Assessment, Environmental Criteria and Assessment Office; EPA report no. EPA–600/8–83/028aF–dF. 4v. Available from: NTIS, Springfield, VA; PB87–142378.

lead continues to accumulate and may be re-exposed in sediments and water bodies throughout the United States (AQCD for Lead, Section 2.3.6).

Several physical and chemical factors govern the fate and bioavailability of lead in aquatic systems. A significant portion of lead remains bound to suspended particulate matter in the water column and eventually settles into the substrate. Species, pH, salinity, temperature, turbulence and other factors govern the bioavailability of lead in surface waters (AQCD for Lead, Section 7.2.2). Lead can bioaccumulate in the tissues of aquatic organisms through ingestion of food and water, and adsorption from water, and can subsequently lead to adverse effects if tissue levels are sufficiently high.[92] The accumulation of lead is influenced by pH and decreasing pH favors bioavailability and bioaccumulation. Organisms that bioaccumulate lead with little excretion must partition the metal such that it has limited bioavailability, otherwise toxicity will occur if a sufficiently high concentration is reached.[93] The general symptoms of lead toxicity in fish include production of excess mucus, lordosis, anemia, darkening of the dorsal tail region, degeneration of the caudal fin, destruction of spinal neurons, aminolevulinic acid dehydratase (ALAD) inhibition, growth inhibition, renal pathology, reproductive effects, growth inhibition, and mortality.[94] Toxicity in fish has been closely correlated with duration of lead exposure and uptake.[95]

Lead exists in the aquatic environment in various forms and under various chemical and physical parameters which determine the ability of lead to cause adverse effects either from dissolved lead in the water column or lead in sediment. Current levels of lead in water and sediment vary widely depending on the source of lead. Conditions exist in which adverse effects to organisms and thereby ecosystems may be anticipated given experimental results. It is unlikely that dissolved lead in surface water constitutes a threat to ecosystems that are not directly influenced by point sources. For lead in sediment, the evidence regarding the effects is less clear. It is likely that some areas with long-term historical deposition of lead to sediment from a variety of sources as well as areas influenced by point sources have the potential for adverse effects to aquatic communities. The long residence time of lead in sediment and its ability to be resuspended by turbulence make lead likely to be a factor for consideration regarding potential risk to aquatic systems for the foreseeable future (73 FR 67008).

III. Lead Emissions From Piston-Engine Aircraft

Currently, lead emitted by piston-engine aircraft operating on leaded avgas is the largest source of lead to the air, contributing about 50% of the National Emission Inventory in 2005. This section describes the draft 2008 avgas lead inventory which is currently undergoing review by State, local and Tribal air agencies. We describe and request comment on input data used to derive airport-specific lead inventories. This section ends with a summary of data forecasting the potential growth of the industry using leaded avgas.

A. Inventory of Lead From Piston-Engine Powered Aircraft

Every three years, the EPA prepares a National Emissions Inventory (NEI) of air emissions of criteria pollutants and hazardous air pollutants with input from numerous State, local, and Tribal air agencies and from industry.[96] For the purposes of this ANPR, EPA is describing piston-engine aircraft lead information provided in the draft 2008 NEI as well as information from the final 2005 NEI. We have chosen to describe the draft 2008 NEI for the following reasons: (1) This is the first version of the NEI that will include airport-specific lead inventories that use our most recently developed methods for estimating lead (described below); (2) this inventory is the first NEI to include approximately 20,000 airport facilities in the U.S.; and (3) to increase awareness of the opportunity for State, local, and Tribal governments and industry to review this draft NEI and provide information that could improve airport lead inventories. Comments and data can be supplied to EPA for the 2008 NEI until mid-2010. While we are describing the draft 2008 NEI for piston-engine aircraft emissions of lead, we do not have draft inventory estimates for 2008 for all sources of lead. The 2008 NEI will be final in 2010.

1. National Emissions of Lead From Piston-Engine Aircraft

To calculate the national avgas lead inventory, the volume of leaded avgas produced in a given year is multiplied by the concentration of lead in the avgas and by the fraction of lead emitted from a combustion system operating on leaded fuel (to account for the lead that is retained in the engine, engine oil and/or exhaust system). For example, the volume of avgas produced in the U.S. in 2008 according to DOE was 235,326,000 gallons.[97] The concentration of lead in avgas ([Pb] in the equation below) can be one of four levels (ranging from 0.14 to 1.12 grams of lead per liter or 0.53 to 4.24 grams of lead per gallon) as specified by the American Society for Testing and Materials (ASTM). By far the most common avgas supplied is "100 Low Lead" or 100LL which has a maximum lead concentration specified by ASTM of 0.56 grams per liter or 2.12 grams per gallon.[98] [99] A fraction of lead is retained in the engine, engine oil and/or exhaust system which we currently estimate at 5%.[100]

For 2008, using DOE fuel volume estimates, the national estimate of lead emissions from the consumption of avgas is 522 tons as calculated according to the following equation:

$$\frac{(235{,}326{,}000\ \text{gal})(2.12\ \text{g Pb/gal})(0.95)}{907{,}185\ \text{g/short ton}} = 522\ \text{short tons Pb}$$

[92] AQC for Lead I. 7–24: (Vink, 2002; Rainbow, 1996).

[93] AQC for Lead AX7.2.3.1.

[94] AQC for Lead page 232, Annex 7.

[95] AQC for Lead page 232, Annex 7.

[96] *http://www.epa.gov/air/data/neidb.html.*

[97] DOE Energy Information Administration. Fuel production volume data obtained from *http://tonto.eia.doe.gov/dnav/pet/hist/mgaupus1A.htm* accessed November 2006.

[98] ChevronTexaco (2006) Aviation Fuels Technical Review. FTR–3. Available online at: *http://www.chevronglobalaviation.com/docs/aviation_tech_review.pdf.*

[99] ASTM International (2007) Standard Specification for Aviation Gasolines D910–06.

[100] U.S. Environmental Protection Agency (2008) Lead Emissions from the Use of Leaded Aviation Gasoline in the United States, Technical Support Document. EPA420–R–08–020. Available online at: *http://www.epa.gov/otaq/aviation.htm.*

As described in the Overview section of this ANPR, DOT's FAA also provides estimates of annual avgas fuel consumption. For 2008, DOT estimates 351,000,000 gallons of avgas were consumed. Consumption of this volume of avgas equates to a national lead emissions estimate for this source of 779 short tons. DOT fuel volume data are derived from FAA estimates of piston-engine activity annually.[101] We are working to identify the source(s) of the information used to derive DOE fuel volume estimates. In the draft 2008 NEI, we are using DOT fuel volume estimates.

We currently cannot estimate the fraction of total lead emissions these estimates comprise since the inventories for all other sources of lead to air are not yet in the draft 2008 NEI. In 2005, lead from avgas comprised about 50% of the national lead inventory for emissions to air. As point source emissions of lead have decreased, lead emissions from piston-engine aircraft have become the largest single source of lead to air (Figure 2). These lead emissions estimates do not include evaporative losses of lead and minimal military aircraft data. Few military aircraft are piston-engine powered and consume leaded avgas.[102] Military aircraft data are supplied by States, and data provided to EPA during the 2008 NEI review will be included in the final 2008 inventory.

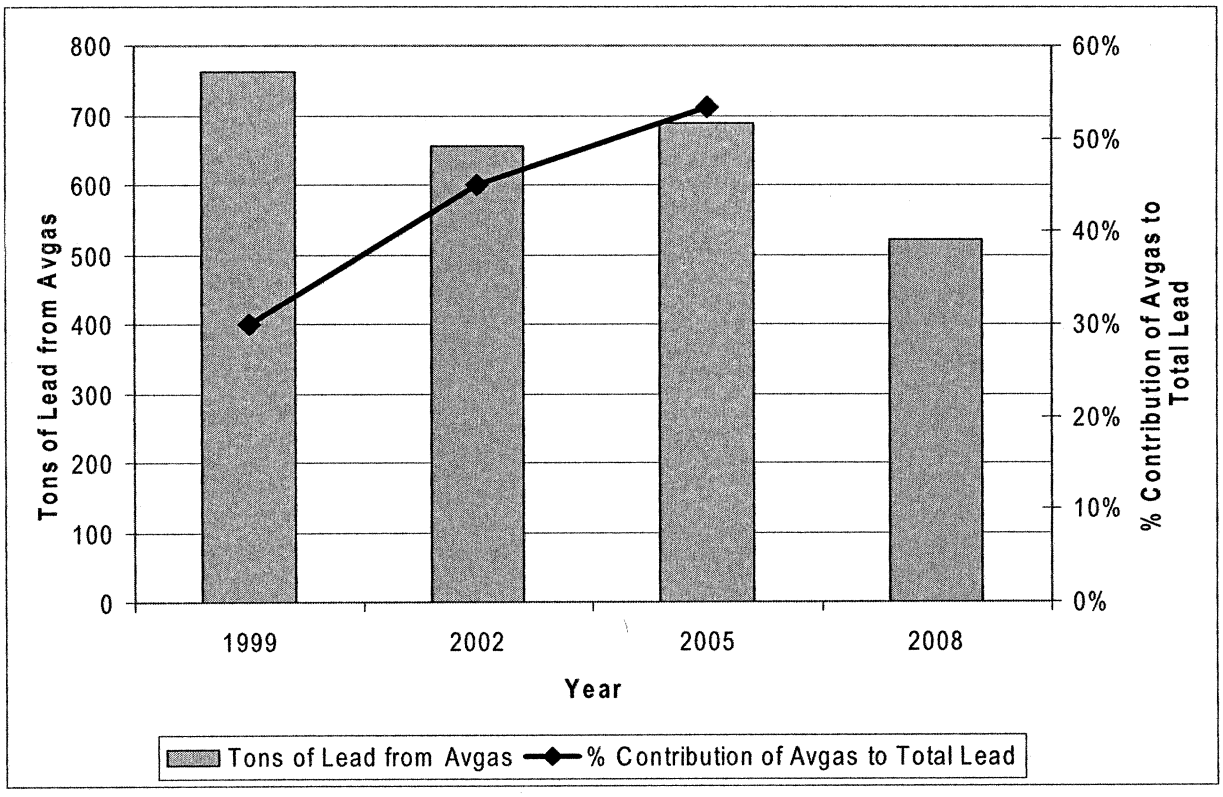

Figure 2. The Increasing Contribution of Lead from Aviation Gasoline to the Total Inventory of Lead Emissions to Air Annually (the total lead inventory for 2008 will be available in 2010). Fuel volume data is from DOE's Energy Information Administration.

2. Airport-Specific Emissions of Lead From Piston-Engine Aircraft

Aircraft gaseous and particulate matter (PM) emissions are calculated through the FAA's Emissions and Dispersion Modeling System (EDMS).[103] This modeling system was designed to develop emission inventories for the purpose of assessing potential air quality impacts of airport operations and proposed airport development projects. Lead emissions from piston-engine aircraft are not included in EDMS. To estimate airport-specific lead inventories we use engine data and other attributes of general aviation (GA) and air taxi (AT) that are used in EDMS for GA and AT and we use methods similar to those in EDMS that are described in an EPA Technical Support Document (TSD) and briefly

[101] U.S. Department of Transportation Federal Aviation Administration Aviation Policy and Plans. FAA Aerospace Forecast Fiscal Years 2009–2025. p.81. Available at: *http://www.faa.gov/data_research/aviation/aerospace_forecasts/2009-2025/media/2009%20Forecast%20Doc.pdf.* This document provides historical data for 2000–2008 as well as forecast data.

[102] ChevronTexaco (2006) Aviation Fuels Technical Review p. 44. Available online at: *http://www.chevronglobalaviation.com/docs/aviation_tech_review.pdf.*

[103] EDMS is available online at: *http://www.faa.gov/about/office_org/headquarters_offices/aep/models/edms_model/.*

summarized here.[104] The data required to estimate airport-specific lead inventories includes the landing and take-off (LTO) activity of piston-engine aircraft at a facility; fuel consumption rates by these aircraft during the various modes of the landing and take-off cycle; the time spent in each mode of the LTO (taxi/idle-out, takeoff, climb-out, approach, and taxi/idle-in); the concentration of lead in the fuel; and the retention of lead in the engine and oil. The equation used to calculate airport-specific lead emissions during the LTO cycle is below, followed by a description of each of the input parameters.

$$\text{LTO Pb (tons)} = \frac{(\text{piston-engine LTO})(\text{avgas gal/LTO})([\text{Pb}])(1\text{-Pb retention})}{907{,}185 \text{ g/short ton}}$$

Piston-engine LTO: Most piston-engine aircraft fall into the categories of either GA or AT. Some GA and AT activity is conducted by turboprop and turbojet aircraft which do not use leaded avgas. There are no national databases that provide airport-specific LTO activity data for piston-engine aircraft separately from turbojet and turboprop aircraft. The fraction of GA and AT aircraft that use piston engines will vary by airport. However, in the absence of airport-specific data, EPA calculated a national default estimate using FAA's GA and AT Activity (GAATA) Survey.[105] The 2005 GAATA Survey reports that approximately 72% of all GA and AT LTOs are from piston-engine aircraft which use avgas, and about 28% are turboprop and turbojet powered which use jet fuel, such as Jet A.[106] Lead is not added to jet fuel. Therefore, to calculate piston-engine aircraft LTO as input for this equation, the total GA plus AT LTOs are multiplied by 0.72.

Avgas use (gal/LTO): Piston-engine aircraft can have either one or two engines. EDMS version 5.0.2 contains information on the amount of avgas used per LTO for some single and twin-engine aircraft. The proportion of piston-engine LTOs conducted by single- versus twin-engine aircraft was taken from the FAA's GAATA Survey for 2005 (90% of LTOs are conducted by aircraft having one engine and 10% of LTOs by aircraft having two engines). Since twin-engine aircraft have higher fuel consumption rates than those with single engines, a weighted average LTO fuel usage rate was established to apply to the population of piston-engine aircraft as a whole. For the single-engine aircraft, the average amount of fuel consumed per LTO was determined from the six types of single piston-engine aircraft within EDMS.[107] This was accomplished by averaging the single-engine EDMS outputs for fuel consumed per LTO using the EDMS scenario property of ICAO/USEPA Default—Times in Mode (TIM), with a 16 minute taxi-in/taxi-out time according to EPA's *Procedures for Emission Inventory Preparation, Volume IV: Mobile Sources,* 1992.[108] This gives a value of 16.96 pounds of fuel per LTO (lbs/LTO). Next, the average single-engine consumption rate was divided by the average density of 100LL avgas, 6 pounds per gallon (lbs/gal), producing an average fuel usage for single-engine piston aircraft of 2.83 gallons per LTO (gal/LTO). This same calculation was performed for the two twin-engine piston aircraft within EDMS, producing an average LTO fuel usage rate for twin-engine piston aircraft of 9.12 gal/LTO.

Using these single- and twin-engine piston aircraft fuel consumption rates, a weighted average fuel usage rate per LTO was computed by multiplying the average fuel usage rate for single-engine aircraft (2.83 gal/LTO) by the fleet percentage of single-engine aircraft LTOs (90%). Next, the twin-engine piston aircraft average fuel usage rate (9.12 gal/LTO) was multiplied by the fleet percentage of twin-engine aircraft LTOs (10%). By summing the results of the single- and twin-engine aircraft usage rates, the overall weighted average fuel usage rate per LTO of 3.46 gal/LTO is obtained.

Concentration of lead in fuel, [Pb]: The maximum lead concentration specified by ASTM for 100LL is 0.56 grams per liter or 2.12 grams per gallon. This amount of lead is normally added to assure that the required lean and rich mixture knock values are achieved. As noted above, 100 Octane (containing 1.12 grams of lead per liter or 4.24 grams of lead per gallon) is used by a small number of piston-engine aircraft. We currently do not include estimates of lead emissions using 100 Octane and we are requesting comment on the airport facilities where 100 Octane is used and the LTO activity associated with the use of this fuel.

Retention of lead in engine and oil (1–Pb Retention): Recent data collected from aircraft piston engines operating on leaded avgas suggests that about 5% of the lead from the fuel is retained in the engine and engine oil.[109] Thus the emitted fraction is 0.95.

Multiplying the lead concentration in 100LL avgas by the weighted average fuel usage rate produces an overall average value of 7.34 grams of lead per LTO (g Pb/LTO) for piston engines: 3.46 gal/LTO × 2.12 g Pb/gal = 7.34 g Pb/LTO. The denominator is a unit conversion factor used to express the lead inventory in units of short tons.

Applying these parameters in the equation above yields the following equation:

[104] U.S. Environmental Protection Agency (2008) Lead Emissions from the Use of Leaded Aviation Gasoline in the United States, Technical Support Document. EPA420–R–08–020. Available online at: *http://www.epa.gov/otaq/aviation.htm.*

[105] The FAA GAATA is a database collected from surveys of pilots flying aircraft used for general aviation and air taxi activity. For more information on the GAATA, *see* Appendix A, online at: *http://www.faa.gov/data_statistics/aviation_data_statistics/general_aviation/.*

[106] There are about 194,000 piston-engine aircraft in the U.S. general aviation and air taxi fleet (175,000 single-engine and 19,000 twin-engine aircraft) according to FAA's 2005 GAATA Survey.

[107] EPA understands that EDMS 5.0.2 has a limited list of piston engines, but these are currently the best data available.

[108] U.S. Environmental Protection Agency (1992) Procedures for Emission Inventory Preparation, Volume IV: Mobile Sources, EPA–450/4–81–026d (Revised).

[109] The information used to develop this estimate is from the following references: (a) Todd L. Petersen, Petersen Aviation, Inc, *Aviation Oil Lead Content Analysis,* Report Number EPA 1–2008, January 2, 2008, available at William J. Hughes Technical Center Technical Reference and Research Library at *http://actlibrary.tc.faa.gov/* and (b) E-mail from Theo Rindlisbacher of Switzerland Federal Office of Civil Aviation to Bryan Manning of U.S. EPA, regarding lead retained in engine, September 28, 2007.

$$\text{Pb (tons)} = \frac{(\text{piston-engine LTO})(7.34 \text{ g Pb/LTO})(0.95)}{907{,}185 \text{ g/short ton}}$$

which simplifies to: Pb = (piston-engine LTO) (7.7×10^{-6} short tons) or 7 grams of lead per LTO where piston-engine LTO = (GA LTO + AT LTO)(0.72). EPA used similar methods to estimate lead emissions from piston-engine powered helicopters which are described separately.[110] We currently estimate there are 6 grams of lead emitted by piston-engine helicopters per LTO.

Lead emitted during the LTO cycle is assigned to the airport facility where the aircraft operations occur.[111] FAA's Office of Air Traffic provides a complete listing of operational airport facilities in the National Airspace System Resources (NASR) database.[112] In 2008, there were 19,896 airport facilities in the U.S., the vast majority of which are expected to have activity by piston-engine aircraft that operate on leaded avgas. There are seven types of airport facilities: airports, balloonports, seaplane bases, gliderports, heliports, stolports,[113] and ultralight facilities. Among these, balloonports are the only facilities not expected to have piston-engine aircraft activity.

Preparing airport-specific lead inventories requires information regarding LTO activity.

These activity data are reported to the FAA for only a small subset of the approximately 20,000 facilities in the U.S. EPA obtains LTO information for approximately 3,400 facilities from FAA's Terminal Area Forecast (TAF) database that is prepared by FAA's Office of Aviation Policy and Plans.[114] The TAF database currently includes information for airports in FAA's National Plan of Integrated Airport Systems (NPIAS), which identifies airports that are significant to national air transportation. For airports not listed in the TAF, operations data are obtained from the NASR database, where available. Operations data provided by the NASR database may be self-reported by airport operators through data collection accomplished by airport inspectors who work for the State Aviation Agency, or operations data can be obtained through other means.[115]

We are using the January 15, 2009 version of the NASR database to evaluate airport lead emissions inventories for 2008. Using the TAF database as the primary source of LTO information and the NASR as a secondary source, we have LTO activity data for approximately 5,600 airport facilities. There are approximately 14,000 facilities in the NASR database for which there are no LTO activity data.[116] We developed methods based on previous work conducted by the FAA to estimate LTO activity at the remaining airport and heliport facilities. We are requesting comment on these methods which are described here briefly. The details regarding the method described here are available in the docket.[117]

The FAA has used regression models to estimate operations at facilities where operations data are not available.[118] [119] In this work and other work, FAA identified characteristics of small towered airports for which there were statistically significant relationships with operations at these airports.[120] Regression models based on the airport characteristics were then used to estimate general aviation operations for a set of non-towered airports. The airport characteristics identified by the FAA and used to estimate general aviation operations at small airports include: the number and type of aircraft based at the facility (*i.e.,* "based aircraft"), population in the vicinity of the airport, airport regional prominence, per capita income, region of the country, and the presence of certificated flight schools. We were able to obtain data from the NASR and the U.S. Census Bureau to evaluate relationships between several airport characteristics and LTO activity. LTO estimates were derived using different models depending on data availability.

The number of based aircraft and county population in which the airport is located were the most highly significant and positive regressors to LTO activity that our analysis provided.[121] The regression equation for based aircraft and county population is: LTOs = 1248 + 203.04*Aircraft + 0.0019*County Population with an R^2 = 0.64. For approximately 7,800 facilities that do not report LTO activity to FAA, we used based aircraft and county population to estimate activity. We request comment on the method we are using to estimate LTO activity at these airport facilities.

To estimate LTO activity at the airport facilities that do not report based aircraft, we used a regression equation based on county population and region of the country. The regression equation using county population and regression of the country is: LTOs = 6200.2 + 0.0087*county population— 175.07*West State − 5567.3*Alaska + 854.83*Northeast with an R^2 = 0.15. This equation has a low correlation coefficient and we are exploring additional options for estimating LTO activity at these facilities for which very little information is reported to the FAA. We request comment on applying the regression equation above and alternative methods to estimate LTO activity at these facilities.

For heliports, which comprise approximately 5,500 facilities in the NASR database, we had insufficient information on which to develop a regression equation and are currently using the median of activity (141 LTOs/year) at heliports for which we have LTO activity data. Nationally, 25% of helicopters are piston-engine powered and therefore use leaded avgas. The FAA and EPA have limited information

[110] U.S. EPA (March 2010) Memorandum from Meredith Pedde to docket EPA–HQ–OAR–2007–0294, titled, "Calculating Aviation Gasoline Lead Emissions in the 2008 NEI." pp.8–9.

[111] An aircraft operation is defined as any landing or take-off event, therefore, to calculate LTOs, operations are divided by two. Most data sources from FAA report aircraft activity in numbers of operations which, for the purposes of calculating lead emissions using the method described in the TSD, need to be converted to LTO events.

[112] An electronic report can be generated from the NASR database and is available for download from the Internet at the following Web site. *http://www.faa.gov/airports_airtraffic/airports/airport_safety/airportdata_5010/*. This database is updated every 56 days.

[113] Stolport is an airport designed with STOL (Short Take-Off and Landing) operations in mind, normally having a short single runway.

[114] *http://aspm.faa.gov/main/taf.asp.*

[115] In the absence of updated information from States, local authorities or Tribes, we are using the LTO data provided in the FAA database.

[116] No Commuter, GA Itinerant, GA Local, or Air Taxi operations data.

[117] U.S. EPA (March 2010) Memorandum from Meredith Pedde to docket EPA–HQ–OAR–2007–0294, titled, "Calculating Aviation Gasoline Lead Emissions in the 2008 NEI."

[118] Federal Aviation Administration, Office of Aviation Policy and Plans, Statistics and Forecast Branch. (July 2001) Model for Estimating General Aviation Operations at Non-Towered Airports Using Towered and Non-towered Airport Data. Prepared by GRA, Inc.

[119] Hoekstra, M. (April 2000) Model for Estimating General Aviation Operations at Non-Towered Airports. Prepared for FAA Office of Aviation Policy and Plans.

[120] GRA, Inc. "Review of TAF Methods," Final Report, prepared for FAA Office of Aviation Policy and Plans under Work Order 45, Contract No. DTFA01–93–C–00066, February 25, 1998.

[121] U.S. EPA (March 2010) Memorandum from Meredith Pedde to docket EPA–HQ–OAR–2007–0294, titled, "Calculating Aviation Gasoline Lead Emissions in the 2008 NEI."

regarding the specific heliports that have activity by piston-engine helicopters. We are requesting information regarding heliport facilities at which piston-engine powered aircraft operate and the activity of these aircraft.

The draft 2008 NEI is the first inventory for which we are implementing the use of LTO-based lead estimates at almost 20,000 airport facilities and we are expecting State, local and Tribal air agency review of these data to improve our current estimates. The specific information on which we are requesting data include: (1) The fraction of GA and AT LTO activity reported to FAA that is conducted by piston-engine versus jet-engine powered aircraft, (2) airport-specific LTO activity for single- versus twin-engine piston-powered aircraft, (3) fuel consumption rates for the piston-engine aircraft operating at each airport, (4) the time spent in each mode of operation including run-up checks conducted by piston-engine aircraft prior to take-off, and (5) the concentration of lead in fuel delivered to individual airports. Methods for providing information to EPA as part of the review process involved in finalizing the 2008 NEI are available.[122]

The discussion above pertains only to lead emissions during the LTO cycle. Lead emitted outside the LTO cycle occurs during aircraft cruise mode and portions of the climb-out and approach modes. This part of an aircraft operation emits lead at various altitudes as well as close to and away from airports. We are developing methods to estimate lead emissions outside the LTO cycle which we anticipate will be available in 2010.

B. Projections for Future Growth

The FAA publishes an annual forecast of the number of piston-engine powered aircraft, hours flown, the consumption of avgas, the numbers of pilots and student pilots.[123] The most recent forecast is for the years 2009 through 2025. The General Aviation Manufacturers Association (GAMA) reproduces the FAA forecast in their annual statistical databook.[124] According to the GAMA summary, the number of active single-engine piston-powered aircraft is projected to increase annually at a 0.5% growth rate, with the aircraft population increasing from 144,220 in 2008 to 157,400 in 2025. The number of active twin-engine piston-powered aircraft is projected to decrease 0.9% annually, with aircraft population decreasing from 18,385 in 2008 to 15,650 in 2025. The piston-powered helicopter population is expected to grow 4.7% annually from a population of 3,970 in 2008 to 8,295 in 2025.

The FAA forecast predicts the number of hours flown in single-engine piston-powered aircraft is projected to increase 0.5% yearly from 2008 to 2025); the number of hours flown in twin-engine piston-powered aircraft is projected to decrease 1.5% annually and the number of hours flown in piston-powered rotocraft is projected to increase 3.9% annually. The changes in numbers of piston aircraft and hours flown is generally reflected in the consumption of leaded avgas. For the years 2008 through 2025, DOT's FAA estimates no change in the volume of leaded avgas consumed by single-engine aircraft in the U.S. (204 million gallons in 2008 and 2025), a 1.9% decrease in leaded avgas consumed by multi-engine aircraft (from a baseline of 108 million gallons in 2008 to 78 million gallons in 2025), and a 3.8% annual increase in the volume of leaded avgas consumed by piston-powered helicopters (from a baseline of 13 million gallons in 2008 to 24 million gallons in 2025). For 2025, the forecast volume of leaded avgas is 348 million gallons. Consumption of this volume of fuel would release 773 tons of lead to the air in 2025.

The number of active pilots flying general aviation aircraft (excluding air transport pilots) is projected to be slightly over half a million in 2025, representing a yearly increase of 0.7% over the forecast period.[125] The student pilot population is forecast to increase at a slightly higher rate of 1.0% yearly for a 2025 total slightly over 100,000. Private pilots and sport pilots are also projected to increase yearly (0.2% yearly increase in the number of private pilots). EPA is requesting comments on the forecast information presented in this section and on the uncertainty in these projections.

IV. Lead Concentrations in the Vicinity of Airports

This section summarizes information regarding the chemical and physical properties of lead emitted by piston-engine aircraft and monitoring and modeling studies regarding ambient and soil lead concentrations in the vicinity of airports where piston-engine aircraft operate.

A. Chemical and Physical Properties of Lead Emitted by Piston-Engine Aircraft

Information regarding lead emissions from engines operating on leaded fuel is summarized in prior AQCDs for Lead.[126] [127] The chemical form of lead added to avgas (*i.e.,* tetraethyl lead) and the lead scavenger, ethylene dibromide, are the same compounds used in leaded gasoline for motor vehicles in the past. Therefore, the summary of the science regarding emissions of lead from motor vehicles presented in the 1997 and 1986 AQCD for Lead are relevant to understanding some of the properties of lead emitted from piston-engine aircraft. In addition, the Swiss Federal Office of Civil Aviation (FOCA) published a study of piston-engine aircraft emissions including measurements of lead.[128]

When leaded avgas is combusted, the lead is oxidized to form lead oxide. In the absence of a lead scavenger in the fuel, lead oxide can collect on the valves and spark plugs and if the deposits become thick enough, the engine can be damaged. Ethylene dibromide reacts with the lead oxide, converting it to brominated lead and lead oxybromides. These halogenated forms of lead are volatile at the high temperatures experienced under combustion conditions and are therefore exhausted from the engine along with the other combustion by-products.[129] Upon cooling to ambient temperatures these brominated lead compounds are converted to particulate matter. In addition to lead halides, ammonium salts of lead halides were also emitted by motor vehicles.[130] Lead halides

[122] All documentation for use in preparing 2008 emission inventories can be found on the NEI/EIS Implementation Web site: *http://www.epa.gov/ttn/chief/net/neip/index.html.*

[123] FAA Aerospace Forecast Fiscal Years 2009–2025. Available online at: *http://www.faa.gov/data_research/aviation.*

[124] General Aviation Manufacturers Association (2008) General Aviation Statistical Databook and Industry Outlook, pp.51–55. Available online at: *http://www.gama.aero/files/2008_general_aviation_statistical_databook__indust_499b0dc37b.pdf.*

[125] Except for sport pilots, an active pilot is a person with a pilot certificate with a valid medical certificate. Source: FAA 2008–2025 Aerospace Forecast.

[126] U.S. Environmental Protection Agency (1977) Air Quality Criteria for Lead. Research Triangle Park, NC: Office of Health and Environmental Assessment, Environmental Criteria and Assessment Office; EPA report no. EPA–600/8–77–017. Available at: *http://www.epa.gov/ttn/naaqs/standards/pb/s_pb_pr.html.*

[127] U.S. Environmental Protection Agency (1986) Air Quality Criteria for Lead. Research Triangle Park, NC: Office of Health and Environmental Assessment, Environmental Criteria and Assessment Office; EPA report no. EPA–600/8–83/028aF–dF. 4v. Available at: *http://www.epa.gov/ttn/naaqs/standards/pb/s_pb_pr.html.*

[128] Federal Office of Civil Aviation Environmental Affairs (2007) Aircraft Piston Engine Emissions Summary Report. *33–05–003 Piston Engine Emissions_Swiss FOCA_Summary. Report_070612_rit.* Available online at: *http://www.bazl.admin.ch.*

[129] ChevronTexaco (2006) Aviation Fuels Technical Review pp. 64–65. Available online at: *http://www.chevronglobalaviation.com/docs/aviation_tech_review.pdf.*

[130] U.S. Environmental Protection Agency (1986) Air Quality Criteria for Lead. Volume 2 Section

undergo compositional changes upon cooling and mixing with the ambient air as well as during transport; the water-solubility of these lead-bearing particles increases with a shift toward smaller mean particle size (USEPA 1977, Section 6.2.2.1). Lead halides from automobile exhaust break down rapidly in the atmosphere, via redox reactions in the presence of atmospheric acids (AQCD for Lead, page E–17).

A small fraction of uncombusted alkyl lead was measured in the exhaust of motor vehicles operating with leaded gasoline and is therefore likely to be present in the exhaust from piston-engine aircraft.[131] Alkyl lead is the general term for organic lead compounds and includes the lead additives tetramethyl lead and tetraethyl lead. Tetraethyl lead is a highly volatile compound and therefore, a portion of tetraethyl lead in fuel exposed to air will partition into the vapor phase. Tetraethyl lead can enter the atmosphere from avgas distribution systems, refueling operations, fuel check pre-flight procedures and evaporative losses from the aircraft.[132] Tetraethyl lead has an atmospheric residence time ranging from a few hours to a few days. Tetraethyl lead reacts with the hydroxyl radical in the gas-phase to form a variety of products that include ionic trialkyl lead, dialkyl lead and metallic lead. Trialkyl lead is slow to react with the hydroxyl radical and is quite persistent in the atmosphere (AQCD for Lead, page 2–5).

Particles emitted by piston-engine aircraft are in the submicron size range (less than one micron in diameter). The Swiss FOCA reported the mean particle diameter of particulate matter emitted by one single-engine piston-powered aircraft ranged from 0.049 to 0.108 microns under different power conditions. The particle number concentration ranged from 5.7×10^6 to 8.6×10^6 particles per cm^3 and using a specific density for soot of 1.2, the authors estimated the mass concentration of particulate emissions as approximately 10,000 $\mu g/m^3$. The authors noted that these particle emission rates are comparable to those from a typical diesel passenger car engine without a particle filter (FOCA, Section 2.2.3.a).

A significant fraction of particles in the submicron size range are deposited and retained in the lower respiratory system of humans and animals (AQCD for PM, page 6–108).[133] The 1986 AQCD for Lead concludes that lead deposited in the lower respiratory tract is totally absorbed (USEPA 1986, page 10–2).

Due to their small size (*i.e.,* typically less than one micron in diameter), lead-bearing particles emitted by piston engines may disperse widely in the environment. However, lead emitted during LTO, particularly during ground-based operations such as start-up, idle, preflight run-up checks, taxi and take-off may deposit to the local environment. Meteorological factors (*e.g.,* wind speed, convection, rain, humidity) will influence local deposition rates. As discussed in the overview section of this ANPR, many airports in the country have been home to piston-engine operations for decades, including years when lead concentrations in avgas were twice as high as current levels. We seek comment on the chemical and physical form of lead emissions from piston-engine aircraft as well as dispersion and deposition patterns that may influence the risk for local-scale impacts.

B. Summary of Airport Lead Monitoring and Modeling Studies

Lead concentrations in ambient air have been reported for samples collected on or near five airports: the Santa Monica municipal airport in Santa Monica, CA, the Van Nuys airport in Van Nuys, CA, the Chicago O'Hare airport in IL, the Toronto Buttonville municipal airport in Ontario, Canada, and the Destin airport in Destin, FL.[134] [135] [136] [137] [138] Air quality modeling of lead emissions from piston-engine aircraft has been conducted as part of EPA's National Air Toxics Assessment and in one study.[139] [140] As discussed in Section VI.A of this ANPR, State and local agencies are initiating lead monitoring at four airports in 2010 that will provide additional information regarding the air quality impact of lead emissions from piston-engine aircraft.

1. Summary of Airport Lead Monitoring Studies

The ambient air monitoring studies reporting lead concentrations on and near airport property served many purposes and therefore used different criteria for determining sample locations, sample durations, sample collection methods, and collection of important metadata (*e.g.,* activity of piston-engine aircraft and aircraft engine type). This section summarizes results from these studies.

Ambient monitoring studies at and near airports indicate that lead levels in ambient air at or near airports with piston-engine activity are higher than lead levels in areas not directly influenced by a lead source. The study at the Santa Monica Airport [141] is the only study to date in which a lead monitor was sited at an area of anticipated maximum concentration for a period of time that provides ambient concentrations relevant for comparison to the Lead NAAQS.[142] In this study where monitors were placed in

Chapters 5 & 6. Research Triangle Park, NC: Office of Health and Environmental Assessment, Environmental Criteria and Assessment Office; EPA report no. EPA–600/8–83/028aF–dF. 4v. Available from: NTIS, Springfield, VA; PB87–142378.

[131] U.S. Environmental Protection Agency Persistent, Bioaccumulative, and Toxic Pollutants (PBT) Program (2002) PBT national action plan for alkyl-Pb. Washington, DC. Available online at: *http://www.epa.gov/pbt/pubs/Alkyl_lead_action_plan_final.pdf.*

[132] U.S. Environmental Protection Agency Persistent, Bioaccumulative, and Toxic Pollutants (PBT) Program (2002) PBT national action plan for alkyl-Pb. Washington, DC. p. 12. Available online at: *http://www.epa.gov/pbt/pubs/Alkyl_lead_action_plan_final.pdf.*

[133] U.S. Environmental Protection Agency (2004) Air Quality Criteria for Particulate Matter (AQCD). Volume II Document No. EPA600/P–99/002bF. Washington, DC: U.S. Environmental Protection Agency. Available online at: *http://cfpub.epa.gov/ncea/cfm/recordisplay.cfm?deid=87903.*

[134] South Coast Air Quality Management District (2007) Community-Scale Air Toxics Monitoring—Sun Valley Neighborhood and General Aviation Airports. Presented by Dr. Philip Fine at the U.S. EPA Air Toxics Data Analysis Workshop—Chicago, IL. October 2–4, 2007.

[135] Illinois Environmental Protection Agency Bureau of Air (2002) Chicago O'Hare Airport Air Toxic Monitoring Program June–December, 2000.

[136] Environment Canada (2000) Airborne Particulate Matter, Lead and Manganese at Buttonville Airport. Toronto, Ontario, Canada:Conor Pacific Environmental Technologies for Environmental Protection Service, Ontario Region.

[137] Tetra Tech, Inc. (2007) Destin Airport Air Sampling Project Executive Summary. Prepared for City of Destin, Florida.

[138] Tetra Tech, Inc. (2008) Destin, Florida Airport Sampling Report. October 2008. Prepared for City of Destin, Florida.

[139] Piazza, B for the Los Angeles Unified School District Environmental Health and Safety Branch (1999) Santa Monica Municipal Airport: A Report on the Generation and Downwind Extent of Emissions Generated from Aircraft and Ground Support Operations. Report Prepared for The Santa Monica Airport Working Group. Available online at: *http://yosemite.epa.gov/oar/CommunityAssessment.nsf/6ce396ab3fa98ee485256db0004acd94/$FILE/Santa_Monica.pdf*

[140] U.S. Environmental Protection Agency (2009) 2002 National-Scale Air Toxics Assessment (NATA). Available online at: *http://www.epa.gov/ttn/atw/nata2002/index.html.*

[141] South Coast Air Quality Management District (2007) Community-Scale Air Toxics Monitoring—Sun Valley Neighborhood and General Aviation Airports. Presented by Dr. Philip Fine at the U.S. EPA Air Toxics Data Analysis Workshop—Chicago, IL. October 2–4, 2007. This presentation includes lead monitoring data collected at and near the Santa Monica Airport and the Van Nuys Airport.

[142] As with other lead sources, source-oriented monitors for airports should be sited in ambient air at the location of predicted maximum lead concentration. Typically, the location of maximum lead concentration will be downwind of the take off strip near the "blast fence." *http://www.epa.gov/ttnamti1/files/ambient/pb/NetworkDesignQA.pdf.*

locations to identify the gradient in lead concentrations with distance from piston-engine activity, ambient lead increased with increasing proximity to the airport. Lead monitors were located at seven sites around the Santa Monica Airport for two three-month periods, in Spring 2006 and Winter 2006–2007. At the monitor placed near the runway blast fence (*i.e.,* the maximum impact site) on the Santa Monica Airport property, the quarterly average concentrations of lead in total suspended particulate matter (TSP) were 0.08 (winter) and 0.10 (spring) μg/m^3.[143] The maximum quarterly average concentration of lead in total suspended particulate matter (TSP) was 0.10 μg/m^3, 67% of the 2008 Lead NAAQS of 0.15 μg/m^3. This suggests that ambient air lead concentrations at similar airports with more piston-engine activity than the Santa Monica Airport may be higher, and could further approach or exceed 0.15 μg/m^3. At a neighborhood site, 70 meters in the prevailing downwind direction from the maximum impact site, quarterly average concentrations of lead in TSP were 0.02 μg/m^3 (winter) and 0.03 μg/m^3 (spring).[144] At a distance of one kilometer in the prevailing downwind direction from the maximum impact site, lead concentrations were 0.004 μg/m^3 and 0.008 μg/m^3 in winter and spring, respectively (these concentrations are considered the background lead concentration). The study conducted at the Santa Monica Airport reported concentrations of ambient lead that were highest at on- and near airport areas downwind from the emissions of piston-engine aircraft. These data suggest that piston-engine activity can increase ambient lead concentrations in downwind neighborhood sites, resulting in levels that are four to five times higher than background levels and maximum impact site concentrations that are up to 25 times higher than background lead levels.[145]

As with other emissions from internal combustion engines, lead emitted by piston-engine aircraft are largely in the submicron and even ultrafine size fraction; therefore, analogies to gradients in ultrafine PM are relevant. As summarized in EPA's 2009 Integrated Science Assessment for Particulate Matter, ultrafine particulate number counts decrease exponentially with distance from roadways.[146] A recent study at the Santa Monica Airport reported increased ultrafine PM in a neighborhood downwind from aircraft operations that were conducted by jet and piston-engine aircraft.[147] The EPA is conducting modeling and monitoring studies to further evaluate the gradient in lead concentrations with distance from airports (*see* Section VI.B of this ANPR).

At the Van Nuys Airport, lead monitoring in ambient air was conducted at six sites for two three-month periods. Lead monitoring for this study included locations of ambient air on airport property. However, monitors were not sited in the area anticipated to experience the maximum impact from piston-engine aircraft emissions. The monitoring site that was in closest proximity to the maximum impact area was more than one kilometer downwind from the maximum impact site.[148] The highest quarterly concentration of lead observed at the Van Nuys Airport was at the monitor located over one kilometer away from the maximum impact site and the lead concentration at this site was 0.03 μg/m^3 which was four-fold higher than the regional background level of 0.008 μg/m^3 measured during the same time period at a site over 2.5 kilometers from the north end of the Van Nuys Airport.

At the Toronto Buttonville Municipal Airport, ten 24-hour PM_{10} samples were collected at four sites at the airport (as close as 15 meters from the runway) and one urban background site in downtown Toronto (located about 10 kilometers west, southwest of the airport). PM_{10} is particulate matter less than ten microns in aerodynamic diameter. The average lead concentration among the airport monitors (which includes three samples that were taken for less than a 12-hour period), was 0.03 μg/m^3 and the maximum 24-hour lead concentration was 0.13 μg/m^3. One sample, collected for 11 hours, measured 0.30 μg/m^3. The maximum concentration observed over a 24-hour period at the airport during this study (0.13 μg/m^3) was 11 times higher than the lead concentration reported for the downtown Toronto, Canada background site during the same time period (0.012 μg/m^3).[149] The average lead concentration reported for the downtown Toronto site was 0.007 μg/m^3. The total particulate matter mass in PM_{10} was also measured in this study, and at the airport, the average mass of lead in PM_{10} was 0.15% of the total PM_{10} mass. At the downtown Toronto site, the average mass of lead in PM_{10} was 0.04% of the total PM_{10} mass. The study reported that the use of leaded avgas at the airport was evident in enhanced airborne lead levels.

Lead and other hazardous air pollutants were measured at sites upwind and downwind of the Chicago O'Hare Airport on sixteen days during the period from June through December, 2000. In order to assess the potential impact of airport operations on ambient concentrations of lead and other pollutants in areas adjacent to airport property, two monitoring sites were deployed on different sides of the airport: one in Bensenville, IL and the other in Schiller Park, IL. For five days during the sampling campaign, the prevailing wind direction provided samples that were collected simultaneously upwind and downwind of the airport. Lead concentrations measured at the downwind site on these five days were, on average, 88% higher than lead concentrations measured at the upwind site. Lead concentrations at the upwind site over the five days averaged 0.016 μg/m^3 and downwind concentrations averaged 0.030 μg/m^3. This study demonstrates the potential for operations on airport property to impact ambient lead concentrations downwind.

Lead TSP samples were collected for four days in April 2007 and for three days in July 2008 near the Destin Airport in Destin, FL. Twelve-hour TSP samples (AM and PM) were collected at four residential locations ranging from 200 meters to 400 meters from the runway at the Destin Airport and at two urban background locations which were 1.4 kilometers and 2.7 kilometers from the airport.[150] The average lead concentration among the four residential locations was 0.004 μg/m^3 and 0.005 μg/m^3 in April and July, respectively, and the average urban

[143] A low-volume sampler was used at this site which EPA expects would yield comparable results to a high-volume sampler, the latter of which is the current method used to collect samples for comparison with the Lead NAAQS.

[144] These distances were measured using Google Earth Pro software.

[145] EPA notes that additional information regarding this study at the Santa Monica Airport may become available. If additional information does become available, EPA will take this information into account in the NPRM.

[146] U.S. Environmental Protection Agency (2009) Integrated Science Assessment for Particulate Matter. Second External Review Draft. EPA/600/R–08/139B. p. 3–110. Available online at: *http://cfpub.epa.gov/ncea/cfm/recordisplay.cfm?deid=210586.*

[147] Hu, S., Fruin, S., Kozawa, K., Mara, S., Winer, A.M., Paulson, S.E. (2009) Aircraft Emission Impacts in a Neighborhood Adjacent to a General Aviation Airport in Southern California. Environ. Sci. Technol. 43:8039–8045.

[148] These distances were measured using Google Earth Pro software. Prevailing wind direction, which determines the direction in which the majority of aircraft depart, is provided in the SCAQMD presentation of these data.

[149] Average concentrations reported in this study include three days of short-duration sampling so the average is not used for comparison here.

[150] These distances were measured using Google Earth Pro software.

background lead concentration was 0.003 and 0.004 μg/m^3 in April and July, respectively.

In addition to these airport-specific studies, authors evaluating ambient lead concentrations collected as part of the Interagency Monitoring of Protected Visual Environments (IMPROVE) network and the National Oceanic and Atmospheric Administration (NOAA) monitoring sites reported a weekend increase in ambient lead that the authors attributed to weekend increases in piston-engine powered general aviation activity.[151] At some airports, piston-engine aircraft activity conducted for recreational purposes can increase greatly on weekends and can also change seasonally with weather conditions. These peaks in activity are important to capture because they may have a strong influence on long-term average concentrations in an area. However, the current database for ambient lead concentrations at maximum impact sites at airports is severely limited and does not allow us to quantitatively evaluate the influence of this variability in activity on ambient lead concentrations.

We have identified no studies evaluating the potential contribution of piston-engine aircraft emissions on vegetation. We have identified only one study that reports soil concentrations on airport property where piston-engine aircraft are active. The air monitoring study conducted at the Toronto Buttonville airport in Ontario, Canada reported lead concentrations in soil samples collected at eight locations at the airport and two locations at the urban background site. Soil samples that were collected at the Toronto Buttonville airport had lead concentrations ranging from 22–46 μg/g which was not substantially higher than the lead concentrations in soil samples at the two urban background sites (29 and 31 μg/g). We are seeking comments on the potential for piston-engine aircraft emissions to impact local soil lead concentrations.

2. Summary of Airport Lead Modeling Studies

Lead emissions from piston-engine aircraft at 3,410 airports were included in the recently released 2002 National Air Toxics Assessment (NATA) as nonroad sources of lead.[152] Ambient lead concentrations and exposures to lead are modeled for area, point and nonroad sources. Nonroad sources include only lead emissions from piston-engine aircraft. Lead emission rates are based on the lead concentration in fuel and not direct emission measurements. For the NPRM we will summarize modeling results from the 2005 NATA which will incorporate all 20,000 airport facilities discussed in Section III of this ANPR.

As discussed in Section VI of this ANPR, the EPA has conducted a study to develop a modeling approach to evaluate the local-scale variability in ambient lead concentrations attributable to piston-engine activity at a case study airport. This project includes collection of air monitoring data for use in evaluating model performance. In the NPRM, we will describe the results of the modeling study with NATA results for this airport and previous modeling work.[153]

We are requesting comment on the availability of additional monitoring or modeling studies that evaluate the air quality impact of lead emissions from piston-engine aircraft as well as potential impacts on soil, house dust, surface water or other environmental media. We also request comment on the availability of studies that assess the potential public health and welfare impacts of lead emissions from piston-engine aircraft.

V. Exposure to Lead From Piston-Engine Aircraft and Potential for Impacts

The continued use of lead in avgas by piston-engine aircraft is a significant source of current lead emissions to the environment. Piston-engine aircraft emissions of lead occur at ground level as well as at flying altitude. Lead from this source is thus concentrated near airports and is also deposited over a large geographic area potentially contributing to higher ambient concentrations in many communities. Numerous groups within the population may be at risk of exposure to lead in fresh emissions from piston-engine aircraft, resuspended dust or other routes. Further, lead accumulates in the environment posing a potential risk to future generations

In this section we discuss a variety of exposure pathways and scenarios by which the general population and environment may experience an increase in lead exposure from emissions of lead by piston-engine aircraft. This section also describes the potential for public health and welfare effects from exposure to compounds associated with the continued use of tetraethyl lead in fuel, such as the contribution of lead to ambient particulate matter, emissions of ethylene dibromide and non-exhaust exposure to tetraethyl lead. We are seeking comments and information on these exposure scenarios as well as additional exposure pathways and scenarios.

A. Exposure to Lead Emissions From Piston-Engine Aircraft

Piston-engine aircraft emissions of lead occur at ground level as well as at altitudes, resulting in areas of more concentrated ambient air exposure, as discussed in Section IV, and can also be distributed over large geographic areas due to in-flight emissions. Lead particles can deposit to soil, water, vegetation and other surfaces or remain airborne for some time following emissions. In this section we discuss potentially exposed populations which include people living or attending schools near airports and pilots. Additional pathways by which people and animals could be exposed to lead emissions from piston-engine aircraft are those associated with agricultural applications of these aircraft and piston-engine activity at seaport and inland waterways.

Lead from aviation gasoline has been identified as a potential source of contamination for local communities.[154] As described below, many general aviation airports are located in densely populated areas. GA airport facilities were typically built in sparsely populated areas, many of which are now heavily populated or are experiencing increased residential development. This development includes dense residential neighborhoods, schools, businesses, and recreational facilities.

Airports can function as a center of many forms of activity in a community. In EPA's initial research, EPA has found that airports are often surrounded by a variety of land uses including recreational sport facilities (*e.g.,* baseball diamonds, soccer fields, golf courses, and swimming pools) and residential communities that take

[151] Murphy, D.M., Capps, S.L., Daniel, J.S., Frost, G.J., and White, W.H. (2008) Weekly patterns of aerosol in the United States. Atmos. Chem. Phys., 8, 2729–2739.

[152] U.S. Environmental Protection Agency (2009) 2002 National-Scale Air Toxics Assessment (NATA). Available online at: *http://www.epa.gov/ttn/atw/nata2002/tables.html.*

[153] Piazza, B for the Los Angeles Unified School District Environmental Health and Safety Branch (1999) Santa Monica Municipal Airport: A Report on the Generation and Downwind Extent of Emissions Generated from Aircraft and Ground Support Operations. Report Prepared for The Santa Monica Airport Working Group. Available online at: *http://yosemite.epa.gov/oar/CommunityAssessment.nsf/6ce396ab3fa98ee485256db0004acd94/$FILE/Santa_Monica.pdf.*

[154] Levin, R.; Brown, MJ; Kashtock, ME; Jacobs, DE; Whelan, EA; Rodman, J; Schock, MR; Padilla, A; Sinks, T. (2008) Lead Exposures in U.S. Children, 2008: Implications for Prevention. Environ. Health Perspec. 116:1285–1293.

advantage of the ease of transport and pilot training/recreation offered by quick access to an airport. Many airports offer on-site tours to the general public, educational classes, and recreational opportunities that can present near-source exposure scenarios. Airports are especially attractive to young children, and programs at some airports are focused on this population and provide outdoor observation facilities and picnic facilities for families to observe aircraft operations. Many general aviation airports offer instructional flying and/or clubs where children 14 years of age and older as well as adults can learn to fly in rental aircraft. Airport facilities also host community-friendly activities such as antique sales, fireworks displays, air shows and community meals. Many airport facilities provide activities which bring people from the general public in close proximity to lead emissions from piston-engine aircraft and piston-engine helicopters. EPA is requesting information regarding national databases that provide information regarding recreational fields and community gardens in close proximity to airports.

1. Population Residing Near Airports

To evaluate the number of people who might be exposed to elevated lead levels due to emissions from piston-engine aircraft, EPA calculated the number of people that live within one kilometer of the centroid of an airport.[155] The centroid of the airport is defined here as the latitude and longitude coordinate provided by airports to FAA.[156] These coordinates typically identify a location in the center of the runway or runway area. For some airports, nearby residences are outside the one kilometer distance from the airport centroid. This is the case for residences near airports that have runways that are longer than two kilometers and for residences near large airports such as those servicing primarily commercial aircraft activity. For airport facilities with one runway that is approximately one kilometer in length, this method will generally include people residing within approximately 500 meters from the ends of the runway and may include residences up to approximately 900 meters from the sides of the runway. The limited ambient lead monitoring data near airports presented in Section IV of this ANPR suggests that for some airports this analysis will underestimate the actual number of people potentially exposed to elevated levels of ambient lead from piston-engine powered aircraft. This is because the analysis will include very little of the nearby population for airports that have a large footprint. We plan to revise this analysis for the NPRM using a graphical interface system that will allow us to evaluate the number of people living within uniform distances of aircraft activity.

Using 2000 U.S. Census Data[157] at the block level, EPA estimates that 16 million people live within one kilometer of the centroid of the 19,896 airport facilities which includes airports, seaplane bases, heliports, stolports, ultralight facilities and glider ports. There are currently 5,567 heliports in this analysis, which can be in densely populated areas. Fourteen of the 16 million people living within one kilometer of the centroid of an airport facility live within one kilometer of a heliport. We currently have limited information regarding which heliport facilities have piston-engine activity and we are seeking comment on piston-engine activity at heliports.

There are several pathways by which people may be exposed to lead associated with the use of piston-engine aircraft. These include inhalation of ambient airborne lead as well as incidental ingestion of ambient lead through contact with indoor or outdoor surfaces to which ambient lead has deposited. Additionally, ambient lead deposited to outdoor soil can be tracked into interior spaces. There is also the potential for ingestion of lead emitted by piston engine aircraft emissions to deposit on edible plants and produce being cultivated in locations near airports. Consequently, there is the potential for exposure to lead emitted by piston-engine aircraft via ingestion for those consuming vegetables grown near airports that service piston-engine aircraft. In addition to personal gardens, community gardens are sometimes sited near airports as these areas can have undeveloped available land. We do not have information on the potential significance of this exposure pathway and we are seeking comment on information and analyses that could inform this issue.

In some cases, pilots and their families choose to live in close proximity to an airstrip. These communities intentionally placed near airports are known as airport communities, fly-in communities or residential airparks. Some residential airparks are private while others have public services and facilities. Some residential airparks are specifically designed as airport communities with driveways leading from aircraft hangars or tie-downs onto the airstrip, while other residential airparks allow apartments to be built in the airplane hangar. Other residential airparks are developed by the addition of a neighborhood immediately adjacent to a commercial airport. FAA terms this a "through-the-fence" operation.[158] Homes are required to be at least 45 meters from the runway centerline and can be built along one or both sides of the runway.[159] Some residential airparks provide taxiways for access to the runway, some provide streets separate from taxiways, and some share automobile and aircraft traffic on the same thoroughfares. A variety of resources list the location and services offered by residential airparks in the U.S. and estimates of the number of residential airparks range from 300 to 600.[160] [161]

In some cases, records are maintained only for those residential parks that have five or more homes or lots.

Exposure modeling at the EPA indicates that, for the 20 highest air emission sources, local emissions are significantly related to local blood lead levels.[162] We are aware of no studies evaluating blood lead levels among people who live in close proximity to airports with piston-engine activity or those for whom lead emissions from piston engines may elevate their exposure via other exposure pathways. As noted in Section II.B.2, the current evidence indicates that the slope for

[155] U.S. EPA (March 2010) Memorandum from Meredith Pedde to docket EPA–HQ–OAR–2007–0294, titled, "Evaluation of People Living Within 1 km of U.S Airport Facilities."

[156] Federal Aviation Administration. Airport Data (5010) & Contact Information, Airport Facilities Data. Retrieved on August 13, 2009 from: *http://www.faa.gov/airports/airport_safety/airportdata_5010/menu/index.cfm.*

[157] Obtained from: *http://www.epa.gov/ttn/fera/human_hem_censusandmet.html.*

[158] FAA officially defines "through-the-fence" as those activities permitted by an airport sponsor through an agreement that permits access to the public landing area by independent entities or operations offering an aeronautical activity or to owners of aircraft based on land adjacent to, but not part of, the airport property. The obligation to make an airport available for the use and benefit of the public does not impose any requirement for the airport sponsor to permit ground access by aircraft from adjacent property. (*http://www.aopa.org/whatsnew/region/airportOps0712.pdf*).

[159] ASTM International (2005) ASTM F2507–05 Standard Specification for Recreational Airpark Design

[160] *http://www.airparks.com* maintains a list of airparks that have five or more homes/lots. The list can be updated by the public and as of July 31, 2009, lists 326 residential airparks.

[161] *http://livingwithyourplane.com/about/* has a directory of over 600 residential airparks.

[162] U.S. Environmental Protection Agency (2007) Pilot Study of Targeting Elevated Blood Lead Levels in Children (Draft Final Report). Washington DC: U.S. EPA Office of Pollution Prevention and Toxics. *http://cfpub.epa.gov/si/si_public_record_report.cfm?dirEntryId=195303.*

lead effects on IQ is nonlinear and is steeper at lower blood lead levels, such that each μg/dL increase in blood lead may have a greater effect on IQ at lower blood lead levels (*e.g.,* below 10 μg/dL) than at higher levels (AQCD for Lead, Section 6.2.13; pp. 8–63 to 8–64; Figure 8–7). We are therefore seeking comment and information regarding blood lead concentrations in children living near airports and the extent to which these emissions cause or contribute to any increases in blood lead levels.

2. Children Attending School Near Airports

As noted in Section II.B.2 of this ANPR, while adults are susceptible to lead effects at lower blood lead levels than previously understood (*e.g.,* AQCD for Lead, p. 8–25), there is general consensus that the developing nervous system in children is among the, if not the, most sensitive health endpoints. Also, as noted in Section II.B.3, while children are considered to be at a period of maximum exposure around 18–27 months, the current evidence has found even stronger associations between blood lead levels at school age and IQ at school age. The evidence "supports the idea that lead exposure continues to be toxic to children as they reach school age, and [does] not lend support to the interpretation that all the damage is done by the time the child reaches 2 to 3 years of age" (AQCD for Lead, Section 6.2.12). Accordingly, school-age children are an at-risk population for lead exposures. This section discusses potential exposures of children at school to lead associated with piston-engine aircraft.

During the school year, students spend many hours a day at school, which usually includes time on school playgrounds and on school athletic fields. Those children attending schools in close proximity to piston-engine activity may have increased exposure to lead. Using data from the U.S. Department of Education's National Center for Education Statistics, EPA calculated that there are 8,637 schools located within one kilometer of the centroid of an airport in the U.S., at which over 3 million children are in attendance (Table 1).[163] [164] These children represent 6% of the total U.S. student population.

TABLE 1—NUMBERS OF PUBLIC AND PRIVATE SCHOOLS AND SCHOOL CHILDREN ATTENDING SCHOOLS LOCATED WITHIN ONE KILOMETER OF THE CENTROID OF AN AIRPORT SERVICING PISTON-ENGINE AIRCRAFT

	Number of schools within 1 km of an airport	Number of students who attend schools within 1 km of an airport
Private Schools	2,185	420,824
Public Schools	6,452	2,869,939
All Schools	8,637	3,290,763

Section II.B.1 notes that children in poverty and black, non-Hispanic children have notably higher blood lead levels than do economically well-off children and white children, in general. To evaluate potential ethnic and economic disparities among children attending schools close to airports compared with the general population, we used data from the Department of Education that provides this information. These data indicate that minorities are overrepresented at schools that are located within one kilometer from the centroid of an airport. For example, Hispanic students represent 23% of students at schools located within one kilometer of an airport, whereas Hispanic students represent 19% of students in all U.S. schools (Table 2). Black students represent 18% of students at schools located within one kilometer of an airport, whereas black students represent 16% of the student population in the U.S. (Table 2).

TABLE 2—RACIAL DISTRIBUTION AT SCHOOLS WITHIN ONE KILOMETER OF THE CENTROID OF AN AIRPORT AND THE RACIAL DISTRIBUTION AT ALL U.S. SCHOOLS

		American Indian/Alaskan Indian	Asian/Pacific Islander	Black, Non-Hispanic	Hispanic	White, Non-Hispanic	Total students*
All Schools within 1 km of an airport.	Number	46,861	154,408	597,223	764,704	1,646,882	3,290,763
	Percent	1%	5%	18%	23%	50%	
All U.S. Schools	Number	632,237	2,581,822	8,696,565	10,525,763	30,664,231	54,271,986
	Percent	1%	5%	16%	19%	57%	

*This table includes only those children that identify as one of the five races/ethnicities. A small fraction of students identify as mixed race or 'other' and they are not included here, therefore the percent of students does not total 100%.

In general, housing and income data suggest that people living in close proximity to major transportation sources (*i.e.,* major roadways, airports, ports, railyards) are likely to have lower income than the general population.[165] To evaluate the socioeconomic status of students who attend schools near airports, EPA evaluated the number of students who are eligible for the U.S. Department of Agriculture's free or reduced school lunch program. Children

[163] U.S. EPA (March 2010) Memorandum from Meredith Pedde to docket EPA–HQ–OAR–2007–0294, titled, "Identification of Schools Within 1 km of U.S Airport Facilities."

[164] Public School Data available for 2006–2007: *http://nces.ed.gov/ccd/bat/;* Private School Data available for 2007–2008: *http://nces.ed.gov/surveys/pss/pssdata.asp.*

[165] U.S. Environmental Protection Agency (2007) Regulatory Impact Analysis for the Regulation to Control Hazardous Air Pollutant Emissions from Mobile Sources. Chapter 3, p. 3–122.

from families with incomes at or below 130 percent of the poverty level are eligible for free meals. Those with incomes between 130 percent and 185 percent of the poverty level are eligible for reduced-price meals.[166] Free and reduced lunch eligibility is only tracked by the U.S. Department of Education's National Center for Education Statistics for students who attend public schools. At public schools that are located within one kilometer of the centroid of an airport, 47% of students are eligible for either free or reduced lunches, whereas nationally, 41% of students at public schools are eligible for either free or reduced lunches. As this analysis demonstrates, those living in the vicinity of airports are more likely to be low-income households and minority residents.

We are aware of no studies evaluating blood lead levels among children attending school in close proximity to airports with piston-engine activity. We are seeking comment and information regarding blood lead concentrations in children who attend schools in close proximity to airports and the extent to which these emissions cause or contribute to any increases in blood lead levels.

3. Agricultural Activities

Piston-engine aircraft are used in a variety of agricultural activities that may introduce lead into the human diet as well as contribute to lead in the environment. The FAA conducts the General Aviation and Air Taxi Activity (GAATA) Survey annually to obtain information on the general aviation and air taxi fleet, the number of hours flown, and the reasons people use general aviation and air taxi aircraft.[167] [168] According to the results of the 2007 GAATA Survey (the most recent), aerial application in agriculture and forestry represented 5% of all hours flown by general aviation aircraft in 2007. Of the total aerial application hours flown in 2007 (1.41 million hours), 60% of the hours were flown by piston-engine aircraft. Aerial application activity includes crop and timber production, which involve fertilizer and pesticide application and seeding cropland. The National Agricultural Aviation Association estimates that there are approximately 3,200 aerial application professional operators and pilots in the United States.[169]

As discussed in Section II.C.1, surface deposition of lead onto plants may represent a significant contribution to the total lead in and on the plant. Lead halides, the primary form of lead emitted by engines operating on leaded fuel, are slightly water soluble. They therefore may be more readily absorbed by plants than other forms of inorganic lead. Atmospheric deposition of lead also contributes to lead in vegetation as a result of contact with above-ground portions of the plant (AQCD for Lead, pp. 7–9 and AXZ7–39; USEPA, 1986, Sections 6.5.3 and 7.2.2.2.1). Livestock may subsequently be exposed to lead in vegetation (*e.g.,* grasses and silage) and in surface soils via incidental ingestion of soil while grazing (USEPA 1986, Section 7.2.2.2.2).[170] The lead concentration of plants ingested by animals is primarily a result of atmospheric deposition of lead particles onto plant surfaces rather than the uptake of soil lead through plant roots. Some of the highest levels of lead exposure among livestock have been attributed to grazing near major sources such as smelters (AQCD for Lead, Section 2.3.8). Atmospheric deposition is estimated to comprise a significant proportion of lead in food (AQCD for Lead, p. 3–48) and dietary intake may be a predominant source of lead exposure among adults (greater than consumption of water and beverages or inhalation (73 FR 66971)).

Depending on wind conditions, an aircraft involved in aerial application may fly only 4 inches to 12 feet above the crops.[171] [172] [173] The low flying height is needed to minimize the drift of the fertilizer and pesticide particles away from their intended target. An unintended consequence of this practice is that exhaust emissions of lead have a substantially increased potential for directly depositing on vegetation and surrounding soil. We have not identified any data or analyses regarding the contribution of piston-engine aircraft lead emissions to lead concentrations in or on plant tissues, in livestock or the dose that this might deliver to the human population. We are seeking comments on the potential significance of this exposure pathway.

4. Pilots, Student-Trainees, Passengers

Pilots, student-trainees, and passengers are all potentially exposed to lead emissions from piston-engine aircraft that use leaded avgas. General aviation passengers and pilots access their aircraft in areas that are typically in close proximity to runways. Therefore, these individuals walk near and breathe the air near locations where aircraft are idling, conducting run-up checks, taxiing, taking off, and landing.

In the U.S., general aviation aircraft fly over 27 million hours and carry 166 million passengers annually.[174] Approximately 36 percent of the hours flown by general aviation are for personal transportation, 19 percent are instructional flight hours, 11 percent are corporate flight hours, 11 percent are for business, eight percent are air taxi and air tours and the remainder include hours spent in other applications such as aerial observation and aerial application.[175] According to the 2008 General Aviation Statistical Databook & Industry Outlook report by the General Aviation Manufacturers Association (GAMA) there were 578,541 pilots in the United States in 2008.[176] Among the pilot population, 75,382 were student pilots, comprising 13% of the total pilot population. The majority of initial pilot training is conducted in piston-engine aircraft.[177] There is no age minimum for

[166] United States Department of Agriculture: Food and Nutrition Service, National School Lunch Program Fact Sheet. Obtained from: *http://www.fns.usda.gov/cnd/Lunch/AboutLunch/NSLPFactSheet.pdf,* August 3, 2009. For the period July 1, 2008, through June 30, 2009, 130 percent of the poverty level is $27,560 for a family of four; 185 percent is $39,220.

[167] The FAA GAATA is a database collected from surveys of pilots flying aircraft used for general aviation and air taxi activity. For more information on the GAATA, *see* Appendix A at *http://www.faa.gov/data_statistics/aviation_data_statistics/general_aviation/.*

[168] National Agricultural Aviation Association: "Help the Aerial Application Industry by completing the 2008 General Aviation Activity Survey." Retrieved from: *http://www.agaviation.org/2008%20GenAvnSurvey.htm* on August 13, 2009.

[169] National Agricultural Aviation Association: "History." Retrieved from: *http://www.agaviation.org/history.htm* on August 13, 2009.

[170] U.S. Environmental Protection Agency (1986) Air Quality Criteria for Lead. Research Triangle Park, NC: Office of Health and Environmental Assessment, Environmental Criteria and Assessment Office; EPA report no. EPA–600/8–83/028aF-dF. 4v. Available from: NTIS, Springfield, VA; PB87–142378.

[171] Xiong, Chao. (9–23–2007) "Future for Crop Dusters is up in the Air". The Star Tribune. Retrieved on August 12, 2009 from: *http://www.startribune.com/local/11606661.html.*

[172] Harpole, T. (3–1–2007) "That Old-Time Profession" Air & Space Magazine. Retrieved on August 12, 2009 from: *http://www.airspacemag.com/history-of-flight/old_time_profession.html.*

[173] Petersen, R. "So you want to be a spray pilot". AgAir Update. Retrieved on October 9, 2009 from: *http://www.agairupdate.com/aau/wannabe/pilot.html.*

[174] General Aviation Manufacturers Association (2008) General Aviation Statistical Databook and Industry Outlook. Available at: *http://www.gama.aero/files/2008_general_aviation_statistical_databook_indust_499b0dc37b.pdf.*

[175] General Accounting Office Report to Congressional Requesters (2001) General Aviation Status of the Industry, Related Infrastructure, and Safety Issues. GAO–01–916.

[176] GAMA 2008 General Aviation Statistical Databook & Industry Outlook report. Retrieved on August 17, 2009 from: *http://www.gama.aero/files/2008_general_aviation_statistical_databook_indust_499b0dc37b.pdf.*

[177] *See http://flighttraining.aopa.org/.*

pilots to begin taking flying lessons.[178] The minimum age for conducting a solo flight is 16 years and a pilot certificate cannot be issued until 17 years of age. According to the 2008 General Aviation Statistical Databook & Industry Outlook report by the GAMA, there are 190 student pilots in the 14–15 year old age group and 11,562 student pilots in the 16–19 years old age group. GAMA reports that in 2008 there are 3,846 private pilots in the 16–19 years old age group. According to the FAA there are more than 500 flight training schools.[179] [180] The requirement for a private pilot certificate is 40 hours in a non-approved school, and 35 hours in an approved school. However, most people obtain 60 to 75 hours of training before earning their pilot certificate.

The general public for whom flying is a recreational activity may be the most highly exposed population to lead emissions from piston-engine activity. In addition to their inhalation exposure to engine exhaust emissions, pilots can be exposed to evaporative emissions of TEL during aircraft fueling, and fuel sump checks during preflight inspections.

5. Bioaccumulation of Lead in Aquatic Organisms

As discussed in Section II.C.2 of this ANPR, lead bioaccumulates in the tissues of aquatic organisms through ingestion of food and water. Because of the potential for significant deposition of lead compounds to water bodies, EPA researches and reports on the atmospheric deposition of lead compounds to the Great Waters (the Great Waters include the Great Lakes, Lake Champlain, Chesapeake Bay and many U.S. coastal estuaries).[181] Alkyl lead, in particular, has been identified by EPA as a Level I Persistent, Bioaccumulative, and Toxic (PBT) pollutant. Level I substances are targeted for virtual elimination through pollution prevention and other incentive-based actions that phase out their use, generation or release in a cost-effective manner within the most expedient timeframe. In 2002, EPA issued the PBT National Action Plan for Alkyl-lead to promote further voluntary reductions of use and exposure to alkyl lead compounds, including leaded avgas.[182]

We are interested in the potential for lead emissions from piston-engine aircraft to be a source of lead pollution to aquatic organisms. Among the approximately 20,000 airport facilities in the United States there are 448 seaplane facilities. Landing and take-off activity by aircraft at these facilities provides a direct pathway for emission of organic and inorganic lead to the air near/above inland waters and ocean seaports where these aircraft operate. In addition to seaplane facilities, many airports and heliports are located very close to rivers, lakes and streams, which can provide a direct pathway for emission of organic and inorganic lead to the air near/above inland waters. Lead emissions from seaplane facilities as well as airports and heliports near water bodies can enter the aquatic ecosystem by either deposition from ambient air or runoff of lead deposited to surface soils. As noted in Section IV.A, lead halides (the primary form of lead emitted by engines operating on leaded fuel) are slightly water-soluble and may be more readily dissolved into water than other inorganic forms of lead.

The EPA Office of Water maintains a database of the National Listing of Fish Advisories (NLFA) which is made available on the Internet to provide information regarding locally-issued fish advisories and safe eating guidelines.[183] States, territories, and Tribes (collectively referred to here as "States") provide this information to EPA every year. The most recent year for which data are available is 2008. States provide information regarding contaminant levels of bioaccumulative toxins measured in fish including lead, mercury, polychlorinated biphenyls (PCBs) and dioxin. Based on these data states issue fish consumption advisories that provide information regarding water bodies for which fish tissue concentrations of these pollutants are found by the State criteria to be safe or unsafe for consumption. The EPA recommends that if fish are detected as having any measureable level of accumulated lead in their tissues that this is cause for concern for all consumers, but especially for children and pregnant or nursing women, and that issuing an advisory is prudent.

The 2008 NLFA database includes data on lead concentrations in over 23,000 fish from over 1,000 lakes and streams. Among these fish, lead concentrations were above the analytical detection limit in 1,000 fish samples [184] and among the fish in which measureable lead concentrations were reported, the concentrations of lead ranged from 5 ppb to 60,400 ppb.[185] States do not provide information regarding the source of contamination in water bodies where fish tissue concentrations of lead are above detection limits. Lead concentrations in fish tissue samples declined from mean concentrations of 0.28 ppm in 1976 to 0.11 ppm in 1984.[186] The decrease in mean lead concentrations was attributed primarily to reductions in the lead content of motor vehicle gasoline. Sources of contamination of lead to waterways frequently noted include lead gunshot, lead sinkers, and Superfund sites.[187] Lead emissions from piston-engine aircraft may contribute to fish tissue lead concentrations in water bodies that are in close proximity to piston-engine aircraft activity. In one case, a State reported lead contaminated fish in a lake on airport property. Piston-engine aircraft emissions of lead also have the potential to contribute to fish tissue lead concentrations at water bodies throughout the U.S. due to the emission of lead in-flight. These in-flight emissions are greatly dispersed in the environment and have been providing a source of lead to the environment for over 80 years.

The Fond du Lac Band of Lake Superior Chippewa, the Leech Lake Band of Ojibwe and the Mille Lacs Band of Ojibwe submitted comments to the Lead NAAQS docket noting the importance of fish consumption in their diet.[188] The Fond du Lac Band of Lake

[178] Federal Aviation Administration (FAA). "Become a Pilot—Student Pilot's Certificate Requirements." Retrieved on August 17, 2009 from: *http://www.faa.gov/pilots/become/student_cert/.*

[179] Federal Aviation Administration (FAA). "Types of Pilot Schools & Choosing a Pilot School". Retrieved on August 17, 2009 from: *http://www.faa.gov/training_testing/training/pilot_schools/.*

[180] Federal Aviation Administration (FAA). "Pilot Schools—Search". Retrieved on August 17, 2009 from: *http://av-info.faa.gov/PilotSchool.asp.*

[181] U.S. Environmental Protection Agency, "The Great Waters Program." Retrieved on August 17, 2009 from: *http://www.epa.gov/air/oaqps/gr8water/.*

[182] U.S. Environmental Protection Agency Persistent, Bioaccumulative, and Toxic Pollutants (PBT) Program (2002) PBT national action plan for alkyl-Pb. Washington, DC. Available online at: *http://www.epa.gov/pbt/pubs/Alkyl_lead_action_plan_final.pdf.*

[183] U.S. Environmental Protection Agency, "The National Listing of Fish Advisories." Retrieved on August 17, 2009 from: *http://www.epa.gov/waterscience/fish/advisories/.*

[184] In some instances States supply individual fish tissue sample results and in some instances States supply averages of multiple fish tissue sample results.

[185] State-specific fish advisories for lead can be downloaded from: *http://oaspub.epa.gov/nlfwa/nlfwa.bld_qry?p_type=advrpt&p_loc=on.*

[186] U.S. Environmental Protection Agency (2000) Guidance for Assessing Chemical Contaminant Data for Use in Fish Advisories. Volume 1: Fish Sampling and Analysis. EPA 823–B–00–007. p. 4–59. Available online at: *http://www.epa.gov/waterscience/fish/advice/volume1/index.html.*

[187] U.S. Environmental Protection Agency, "Lead Fishing.". Retrieved on August 17, 2009 from: *http://www.epa.gov/owow/fish/animals.html.*

[188] *See* Docket ID Number EPA–HQ–OAR–2006–0735. The Tribes that submitted comments were:

Continued

Superior Chippewa also noted in their comments, "As a reservation with a municipal airport within its exterior boundaries with two schools and Tribal housing in close proximity to the airport (one half mile), leaded aircraft fuel is a concern." The Leech Lake Band of Ojibwe noted in their comments, "Along with the concerns over the emission inventory, the Tribes have great concern regarding the amount of lead from "small" prop engine airports. On or very near the Leech Lake Reservation there are seven prop plane airports with many private air strips scattered throughout the area." EPA is requesting comment on any information regarding the potential impact of lead emissions from piston-engine aircraft on aquatic environments.

B. Related Exposures of Concern

While the subject of this ANPR is focused on the emissions of lead from piston-engine aircraft, the use of tetraethyl lead in fuel contributes to additional public health and welfare issues that are also of concern to the Agency. Among these issues are: (1) The contribution of lead emissions to ambient PM, especially in areas in nonattainment with the $PM_{2.5}$ NAAQS; (2) the emissions of ethylene dibromide to the environment; and (3) the evaporative emissions of tetraethyl lead.

1. Lead Contribution to Ambient Particulate Matter

As discussed in Section IV.A of this ANPR, lead emitted by piston engines is expected to be predominantly in the particle phase and will contribute to ambient PM. There are two U.S. National Ambient Air Quality Standards (NAAQS) for $PM_{2.5}$: an annual standard (15 $\mu g/m^3$) and a 24-hour standard (35 $\mu g/m^3$). As of March 4, 2009 there are 39 1997 $PM_{2.5}$ nonattainment areas. Area designations for the 2006 24-hour $PM_{2.5}$ NAAQS were promulgated in 2009 for 31 areas.[189] All of these nonattainment areas have at least one airport servicing aircraft using leaded avgas and most nonattainment areas have several airport facilities. The Los Angeles-South Coast Air Basin has 343 airport facilities which have a cumulative lead inventory of 15.0 tons. The contribution of PM-lead to these nonattainment areas ranges from 0.001 to 0.7% of the mobile source $PM_{2.5}$ inventory in these areas. In each of four areas designated as nonattainment with the $PM_{2.5}$ annual standard, there is at least one lead monitor at which design values for 2006–2008 are greater than the 2008 Lead NAAQS and two of these counties have $PM_{2.5}$ concentrations exceeding the 24-hour $PM_{2.5}$ NAAQS. Reductions in lead emissions in these counties would help bring the area into attainment.

2. Ethylene Dibromide

As noted in Section IV.A, ethylene dibromide (1,2-dibromoethane) is added to leaded avgas to scavenge lead in order to prevent the deposition of lead oxide to valves and spark plugs. Emissions of ethylene dibromide are a concern to the EPA. Ethylene dibromide is classified in EPA's Integrated Risk Information System database as likely to be carcinogenic to humans, and a number of chronic noncancer effects have been observed in animals and humans exposed to ethylene dibromide by inhalation and ingestion.[190] EPA developed an inhalation reference concentration, ingestion dose and cancer unit risk estimates for inhalation and ingestion of ethylene dibromide.[191] Evidence of nasal tumors, hemangiosarcomas and mesotheliomas in rodents was used by EPA to develop inhalation unit risk estimates (central tendency estimates and 95% upper bound estimates) of 3×10^{-4} to 6×10^{-4} per $\mu g/m^3$. Evidence of forestomach tumors, hemangiosarcomas, thyroid follicular cell adenomas or carcinomas was used by EPA to develop drinking water unit risk estimates (central tendency estimates and 95% upper bound estimates) of 3×10^{-5} to 6×10^{-5} per $\mu g/L$ assuming consumption of 2 L of water per day by a 70 kg human. EPA developed a reference concentration for chronic inhalation of 9 $\mu g/m^3$ based on the critical effect of nasal inflammation and a reference dose for chronic ingestion of 9 µg per kg per day based on the critical effects of testicular atrophy, liver peliosis, and adrenal cortical degeneration. The National Toxicology Program listed ethylene dibromide as "reasonably anticipated to be a human carcinogen" in the Eleventh Report on Carcinogens in 2005.[192] The International Agency for Research on Cancer (IARC) has classified ethylene dibromide as a Group 2A carcinogen: probably carcinogenic to humans. –

In the additive package used to dose fuel with lead, ethylene dibromide is added to achieve a lead-to-bromine atom ratio of 1:2 and a bromine-to-lead weight ratio of 1:2.[193] The concentration of ethylene dibromide in leaded avgas is listed as less than 4 milliliters per gallon (<9 grams per gallon).[194] Since ethylene dibromide was measured in the exhaust and evaporative emissions from light-duty vehicles in the U.S. when they were operated on leaded fuel containing ethylene dibromide we anticipate piston-engine aircraft are currently a source of ethylene dibromide to air.[195] Measurements of ethylene dibromide have not been made that would allow estimation of the exhaust and evaporative emissions from piston-engine aircraft as well as the emissions associated with refueling and pre-flight fuel checks.

In addition to contributing to ambient concentrations, ethylene dibromide may also enter underground aquifers via leaking underground storage tanks or fuel spills. Studies demonstrate that ethylene dibromide may persist for long periods of time in certain groundwater environments.[196] The EPA established a Maximum Concentration Level (MCL) of 0.05 µg/L for ethylene dibromide, which is 100-fold lower than the MCL for benzene and 300-fold lower than the MCL for lead. The MCL is the highest level of a contaminant that is allowed in drinking water and is an enforceable drinking water standard.[197]

The EPA Office of Underground Storage Tanks (OUST) and Office of Research and Development's National Risk Management Research Laboratory (NRMRL) in association with the Association of State and Territorial

The Bad River Band of Lake Superior Tribe of Chippewa Indians, The Quapaw Tribe of Oklahoma, The Leech Lake Band of Ojibwe, The Lone Pine Paiute-Shoshone Reservation, The Fond du Lac Band of Lake Superior Chippewa, and The Mille Lacs Band of Ojibwe.

[189] *http://www.epa.gov/pmdesignations/.*

[190] U.S. Environmental Protection Agency (2004) Integrated Risk Information System (IRIS), IRIS Summary for 1,2-dibromoethane CASRN 106–93–4. Available online at: *http://www.epa.gov/ncea/iris/subst/0361.htm.*

[191] U.S. Environmental Protection Agency (2004) Integrated Risk Information System (IRIS), Toxicological Review of 1,2-dibromoethane in support of summary information on the Integrated Risk Information System. Available online at: *http://www.epa.gov/ncea/iris/toxreviews/0361tr.pdf.*

[192] National Toxicology Program (NTP) (2005) 11th Report on Carcinogens. Public Health Service, U.S. Department of Health and Human Services, Research Triangle Park, NC. Available from: *http://ntp-server.niehs.nih.gov.*

[193] Thomas VM; Bedford JA; Cicerone RJ. (1997) Bromine emissions from leaded gasoline. Geophys Res Letters 24(11):1371–1374.

[194] Chevron Material Safety Data Sheet for aviation gasoline. Available online at: *http://www.chevronglobalaviation.com/docs/aviation_gas.doc.*

[195] Sigsby, J.E.; Dropkin, D.L.; Bradow, R.L.; Lang, J.M. (1982) Automotive Emissions of Ethylene Dibromide. SAE Technical Paper Series 820786.

[196] U.S. Environmental Protection Agency Office of Research and Development (2008) Natural Attenuation of the Lead Scavengers 1,2–Dibromoethan (EDB) and 1,2–Dichloroethane (1,2–DCA) at Motor Fuel Release Sites and Implications for Risk Management, Chapter 2. EPA 600/R–08/107. Available online at: *http://www.epa.gov/ada.*

[197] U.S. Environmental Protection Agency, "Drinking Water Contaminants" Available online at: *http://www.epa.gov/safewater/contaminants/index.html.*

Solid Waste Management Officials (ATSWMO) have formed a team to evaluate the potential for public health and welfare effects attributable to ethylene dibromide from past or present fuel leaks and spills.[198] Among the goals of the EPA/ATSWMO team is to develop information on the distribution of ethylene dibromide in groundwater at leaking underground storage tank sites in States that do not routinely monitor this contaminant. Water samples for this study were provided by State agencies to EPA between October 2005 and July 2007. Of the 802 groundwater samples provided from 102 sites, ethylene dibromide was detected in 54 samples, 43 of which had ethylene dibromide concentrations above the MCL.[199] These sites did not include analysis of groundwater at airports.

While not the focus of this ANPR, ethylene dibromide exposure from inhalation or ingestion pathways is an ongoing concern for EPA, and reduction in the use of leaded gasoline containing ethylene dibromide may reduce exposure and risk to public health and welfare from ethylene dibromide.

3. Non-Exhaust Exposure to Tetraethyl Lead

Tetraethyl lead is a volatile component of leaded avgas. The largest source of tetraethyl lead exposure is expected to originate from evaporative emissions associated with fuel production, fuel distribution, aircraft refueling, pre-flight fuel checks, accidental spills, and fuel tank venting. Pilots check fuel for contaminants by draining a small amount of fuel from each tank sump before flight and after refueling. This fuel is frequently deposited onto the tarmac after the fuel check. EPA is interested in data regarding this practice and any estimates of lead emitted to the air by evaporation of the alkyl lead in the fuel deposited on the tarmac. Alkyl lead becomes oxidized in the atmosphere by direct photolysis, reaction with ozone, and by reaction with hydroxyl compounds. Therefore, depending on ambient conditions, alkyl lead may exist in the atmosphere for hours to days.

Pilots, aviation fuel attendants and mechanics are likely to be among the most highly exposed population to alkyl lead. These populations are at risk due to both inhalation and possible dermal exposure. Absorption of inhaled alkyl lead into the bloodstream is higher than that for inorganic lead compounds which are generally in particulate form (AQCD for Lead, Section 4.2.1). In addition to exposure to lead in the exhaust emissions from piston-engine aircraft, the PBT National Action Plan for Alkyl-lead [200] noted that aviation fuel attendants and mechanics are potentially exposed to alkyl lead emissions due to inhalation of alkyl lead compounds released to the air during fueling, via evaporative emissions from spills, or via evaporative emissions from unused gasoline remaining in the engine or fuel tanks. Further, these populations are also at risk because of possible dermal absorption of gasoline containing alkyl lead compounds. Due to the lipophilic nature of alkyl lead and its ability to permeate biological membranes, alkyl lead is absorbed rapidly and extensively through the skin (AQCD for Lead, page 4–12). In addition to direct human exposure, runoff and deposition of alkyl lead to waterways would increase the amount of lead available for uptake by aquatic plants and animals (*see* Section V.A.7 of this ANPR for more information).

VI. Additional Information Available for the NPRM To Evaluate the Potential for Public Health and Welfare Impacts and Considerations Regarding Engine Emission Standards

As noted in the Overview section of this ANPR, in this action we are describing information currently available and information being collected that will be used by the Administrator to subsequently exercise her judgment regarding whether aircraft lead emissions from avgas use cause or contribute to air pollution which may reasonably be anticipated to endanger public health or welfare. These additional data will come from lead monitoring being planned to satisfy requirements of the Lead NAAQS, air quality modeling planned at EPA that is described below and any information submitted to EPA during the comment period for this ANPR.

A. The Lead NAAQS and Lead Emissions From Piston-Engine Aircraft

On November 12, 2008, when EPA promulgated revisions to the Lead NAAQS, EPA also adopted revisions to ambient air monitoring requirements for lead, described the approach for implementing the revised standards, and provided an implementation timeline. We describe each of these activities as well as more recent activities below. This section also discusses the most current information available regarding how implementation of the Lead NAAQS may provide additional data on the potential for lead emissions from piston-engine aircraft to cause or contribute to ambient air concentrations that exceed the 2008 Lead NAAQS.

Acknowledging that the existing monitoring network for lead is not sufficient to determine whether many areas of the country would meet the 2008 Lead NAAQS, the EPA re-designed the nation's lead monitoring network to allow assessment of compliance with the revised lead standard. Lead monitoring requirements promulgated in 2008 stipulate that, at a minimum, monitoring agencies must place monitors at maximum impact areas where lead emissions are greater than or equal to one ton or more per year. We refer to these monitors as source-oriented monitors. EPA Regional Administrators may waive the source-oriented monitoring requirements if the monitoring agency can demonstrate that emissions from the source will not contribute to maximum air lead concentrations greater than 50 percent of the revised standard, or 0.075 ug/m^3. EPA estimated that approximately 135 facilities emit lead at levels over the one ton emission threshold, making them subject to the lead monitoring requirements. Lead monitors are operating at a small number of these sources (described in Section VI.A.2 below). For the remainder, source-oriented monitors are to be operational by January 1, 2010.

EPA also required monitors to be operated in each of the 101 urban areas with populations greater than 500,000 in order to gather information on the general population's exposure to lead in air. We refer to these monitors as population-oriented monitors.

Following promulgation of the 2008 Lead NAAQS and monitoring requirements, the Natural Resources Defense Council, the Missouri Coalition for the Environment Foundation, Physicians for Social Responsibility, and the Coalition to End Childhood Lead Poisoning (Petitioners) petitioned

[198] U.S. Environmental Protection Agency Office of Research and Development (2008) Natural Attenuation of the Lead Scavengers 1,2–Dibromoethan (EDB) and 1,2–Dichloroethane (1,2–DCA) at Motor Fuel Release Sites and Implications for Risk Management. p.3. EPA 600/R–08/107. Available online at: *http://www.epa.gov/ada.*

[199] U.S. Environmental Protection Agency Office of Research and Development (2008) Natural Attenuation of the Lead Scavengers 1,2–Dibromoethan (EDB) and 1,2–Dichloroethane (1,2–DCA) at Motor Fuel Release Sites and Implications for Risk Management. p.4. EPA 600/R–08/107. Available online at: *http://www.epa.gov/ada.*

[200] U.S. Environmental Protection Agency Persistent, Bioaccumulative, and Toxic Pollutants (PBT) Program (2002) PBT national action plan for alkyl-Pb. Washington, DC. Page 14. Available online at: *http://www.epa.gov/pbt/pubs/Alkyl_lead_action_plan_final.pdf*

EPA for reconsideration of the lead emission rate at which we required monitoring (the "emission threshold," currently 1.0 tpy).[201] EPA granted the petition to reconsider aspects of the monitoring requirements and proposed revisions to lead ambient air monitoring requirements in December 2009 (74 FR 69050).

Also as part of promulgating the 2008 Lead NAAQS, EPA described the approach for implementing the revised standards and provided an implementation timeline. EPA will use county boundaries as the presumptive boundaries for nonattainment areas, and adjustments to boundaries will be made on case-by-case bases. States in which there is sufficient monitoring data made recommendations for areas to be designated attainment, nonattainment, or unclassifiable in October 2009. States update their recommendations to EPA in October 2010 using any additional monitoring data available from the increased source-oriented monitoring network described above. Final designations of all attainment, nonattainment and unclassifiable areas will be effective no later than January 2012. Where data are sufficient from the currently existing lead monitoring network, we expect that initial designations will be effective January 2011. States are directed to submit State Implementation Plans (SIPs) no later than eighteen months after designation, outlining how they will reduce pollution to meet the lead standards. States are required to attain the standards no later than five years after designation. Additional information regarding the lead standard implementation is available at *http://www.epa.gov/air/lead/actions.html* and in the 2008 Lead NAAQS (73 FR 67030–67043).

1. Monitoring Lead at Airports To Evaluate Ambient Concentrations to Which Lead Emissions From Piston-Engine Aircraft Contribute

Among the estimated 135 source-oriented lead monitoring sites, there are four airports where we expect lead monitoring to begin in January 2010. These airports are the Van Nuys Airport in Van Nuys, CA; the Phoenix Deer Valley Airport in Phoenix, AZ; the Centennial Airport in Englewood, CO; and the Daytona Beach International Airport in Daytona Beach, FL. In each of these areas, we will, as data becomes available, evaluate the impact of lead emissions from piston-engine aircraft on air quality.

2. Evaluating the Contribution of Lead Emissions From Piston-Engine Aircraft to Areas Approaching or Exceeding the Lead NAAQS

In this section we discuss available information and information that will become available in 2010 that can be used to evaluate the potential for lead emissions from piston-engine aircraft to contribute to ambient concentrations in areas exceeding the Lead NAAQS. This evaluation may include the following: (1) Areas currently out of attainment or designated as maintenance with the 1978 Lead NAAQS; (2) areas with current lead monitors that are out of attainment with the 2008 Lead NAAQS; and (3) locations that will have new lead monitors to meet the 2008 Lead NAAQS source-oriented monitoring requirements. In each of these areas, we will, as data become available, evaluate the contribution of lead emissions from piston-engine aircraft to lead inventories and air quality.

The EPA is retaining the 1978 Lead NAAQS until one year after designations for the 2008 Lead NAAQS, except in current nonattainment areas. In those areas, EPA will retain the 1978 standard until the area submits, and EPA approves, attainment and/or maintenance demonstrations for the new standards. Only two areas, East Helena, MT (including Lewis and Clark counties), and part of Jefferson County in Herculaneum, MO, are designated nonattainment with the 1978 Lead NAAQS. The industrial facility causing nonattainment with the Lead NAAQS in the East Helena area closed in 2001. Eleven areas are designated as maintenance areas, only three of which currently have lead monitors. These three locations (Iron County, MO, Dakota County MN, and Collin County, TX) have lead monitors with design value concentrations exceeding the 2008 Lead NAAQS. The design value is the highest "rolling" three month average over a three-year period that is relevant for comparison to the level of the 2008 Lead NAAQS.

Implementation of the 2008 Lead NAAQS is underway, and we have not yet designated areas under it. When EPA promulgated the 2008 Lead NAAQS, EPA provided a list of 18 counties with design values exceeding the 2008 lead standard of 0.15 $\mu g/m^3$. Using more recent data from EPA's Air Quality System, there are 14 sites at which design values exceed the 2008 Lead NAAQS (Table 3). Over 4.6 million people live in the counties where design values are greater than the 2008 Lead NAAQS. After EPA designates areas that currently have sufficient lead monitoring data, no later than October 15, 2010, we will evaluate the contribution of lead emissions from piston-engine aircraft to lead inventories in nonattainment, maintenance and in some cases, unclassifiable areas, depending on the presence of point sources of lead and the status of ambient lead monitoring in those areas.

TABLE 3—COUNTIES WITH MAXIMUM ROLLING QUARTERLY AVERAGE LEAD CONCENTRATIONS EXCEEDING THE 2008 LEAD NAAQS

County, state	EPA region	County population (2000 Census)	Design value, 2006–2008 ($\mu g/m^3$)
Jefferson, MO	7	198,099	2.89
Iron, MO	7	10,697	2.46
Delaware, IN	5	118,769	2.16
Hillsborough, FL	4	998,948	1.77
Collin, TX	6	491,675	1.26
Pike, AL	4	29,605	1.21
Dakota, MN	5	355,904	0.70
Fulton, OH	5	42,084	0.69
Berks, PA	3	373,638	0.36
Madison, IL	5	258,941	0.28
Logan, OH	5	46,005	0.27

[201] The petition is available at: *http://www.epa.gov/air/lead/pdfs/OAR.09.000.7687.pdf.*

TABLE 3—COUNTIES WITH MAXIMUM ROLLING QUARTERLY AVERAGE LEAD CONCENTRATIONS EXCEEDING THE 2008 LEAD NAAQS—Continued

County, state	EPA region	County population (2000 Census)	Design value, 2006–2008 (μg/m³)
Sullivan, TN	4	153,048	0.26
Beaver, PA	3	181,412	0.20
Cuyahoga, OH	5	1,393,978	0.17

Lead emissions from piston-engine aircraft operating at airports outside nonattainment areas can also contribute to lead measured in the nonattainment area. In addition, other sources of lead that do not, by themselves, exceed the lead emission monitoring threshold may be located near airports. For example, at some airports in the U.S., race track venues are located immediately adjacent to runways where piston-engine aircraft operate. We are seeking information regarding ambient concentrations of lead that can result from the combined emissions of leaded fuel used in some race vehicles, lead emissions from piston-engine aircraft and other sources of ambient lead.

The EPA intends to conduct modeling analyses to evaluate the contribution of these lead emissions to nonattainment areas and areas that may be approaching nonattainment concentrations. Lead emitted by piston-engine aircraft flying through nonattainment areas may also contribute to lead measured in the nonattainment area. These emissions would be potentially challenging to quantify, although a series of scoping analyses could be conducted. We seek comment on characterizing the contribution of lead emissions from piston-engine aircraft flying through areas that are not attaining the 2008 Lead NAAQS and the potential contribution of piston-engine lead emissions that may be transported into lead nonattainment areas.

As noted above, approximately 135 new lead monitors will begin collecting ambient lead samples starting in January 2010 in order to satisfy the source-oriented monitoring requirements of the 2008 Lead NAAQS. In the NPRM we will discuss the potential contribution of lead from piston-engine aircraft to these areas where the ambient data suggest lead concentrations are close to or exceeding the 2008 Lead NAAQS of 0.15 μg/m³.

B. Additional Information EPA Is Collecting To Evaluate Ambient Lead Concentrations Attributable to Emissions From Piston-Engine Aircraft

In 2008 EPA initiated a study to provide information regarding the local-scale gradient in lead concentrations on- and near airport facilities with piston-engine powered aircraft activity.[202] This study focused mainly on developing an approach for modeling lead emissions from piston-engine aircraft using the Meteorological Society (AMS)/EPA Regulatory Model (AERMOD), and evaluating it using air quality measurements. For purposes of local-scale dispersion modeling, AERMOD is EPA's preferred model.[203] The approach developed includes apportioning lead emitted during landing and take-off to different altitudes in order to characterize emissions during these modes of operation in a realistic manner. In addition, this modeling study includes analysis of the spatial and temporal emissions from piston-engine aircraft during the other modes of aircraft operation (*e.g.,* taxi, run-up check, take-off, landing). The modeling results include an evaluation of the relative contributions of all known sources of lead to the local ambient air, including piston-engine aircraft, local traffic, resuspended road dust, and industrial sources within 20 km of the airport selected for our case study. The EPA study at the Santa Monica Airport was recently completed.[204]

As part of this work, we collected air, soil and house dust samples for lead analysis in order to conduct a model-to-monitor evaluation, and to evaluate the potential for lead emissions from piston-engine aircraft to create a gradient in air, soil and house dust concentrations of lead in proximity to the airport activities.

We selected the Santa Monica municipal airport for this study because of the data available from the monitoring study conducted by the SCAQMD in 2005–2007 discussed in Section IV.B of this ANPR. In addition, there are no major point sources of lead in close proximity to the airport, simplifying the model development and interpretation of monitoring results.

EPA intends to use this modeling approach to evaluate potential for exceedance of the Lead NAAQS on airport property and surrounding areas, as well as providing an approach to characterize the contribution of lead emissions from piston-engine aircraft to areas with ambient lead concentrations currently exceeding the 2008 Lead NAAQS. This modeling approach will also allow us to quantify the changes in ambient lead concentrations following the implementation of different piston-engine control strategies. The application of this modeling approach to a case-study airport could also be used as input to conduct a risk assessment evaluating the potential contribution of lead from piston-engine emissions on blood lead levels and IQ deficits for those living near or attending school near general aviation activity.

We request comment on all information EPA is collecting to evaluate ambient lead concentrations attributable to emissions from piston-engine aircraft and risk posed by emissions of lead from piston-engine aircraft.

C. Considerations Regarding Engine Emission Standards

A positive endangerment and cause or contribute finding with respect to the emissions of lead from general aviation aircraft would trigger EPA's duty to set emission standards. In considering emission standards, EPA would consider controlling emissions from piston engines using aviation gasoline in aircraft. In cooperation with FAA, EPA would evaluate the technical feasibility of a possible phase-down or elimination of leaded aviation gasoline. One option to consider, for example, could be an emissions standard

[202] U.S. EPA (March 2010) Memorandum from Marion Hoyer to the docket EPA–HQ–OAR–2007–0294, titled, "Work Plan for Air Quality Modeling and Monitoring of Lead Emissions from Piston-Engine Powered Aircraft." Docket number EPA–HQ–OAR–2007–0294.

[203] The EPA provides modeling guidance for AERMOD at *http://www.epa.gov/ttn/scram/guidanceindex.htm* and *http://www.epa.gov/scram001/dispersion_prefree.htm#aermod.* A post-processor for AERMOD that reads model output and calculates rolling 3-month averages for the period modeled to provide lead concentrations that can be compared with the Lead NAAQS is available online at: *http://www.epa.gov/ttn/amtic/files/ambient/pb/leadpost.zip.*

[204] The report from this study is posted at *http://www.epa.gov/otaq/aviation.htm.*

(established under 40 CFR 87) that would require all newly-manufactured general aviation piston engines to be able to operate with appropriate reliability and durability on unleaded aviation gasoline by some future date. Such a standard might require that new engines used in aircraft would have to receive an FAA type certificate that reflects achievement of these requirements under FAA regulations set forth at 14 CFR parts 33/34.

Beyond this, EPA recognizes that there is a big challenge in dealing with the in-use fleet. Converting in-use aircraft/engines to operate on unleaded aviation gasoline would be a significant logistical challenge, and in some cases a technical challenge as well. In many cases, the implementation of this concept might depend upon efforts and actions of aircraft and engine manufacturers in identifying the necessary modifications and developing hardware as necessary. Depending on timing, these engines might need to be able to operate on either leaded or unleaded aviation gasoline, or a blend thereof. EPA recognizes that in many cases these modifications could trigger the need for FAA regulatory approval of the modifications for both the engines and airframes. Given the potentially large number of affected aircraft and the potential complexities involved, a program affecting in-use aircraft engines would need careful consideration by both EPA and FAA and the two agencies would need to work together in considering any potential program affecting the in-use fleet.

EPA requests comment on this outline of approaches for transitioning the fleet to unleaded aviation gasoline, as well as potential implementation dates, if EPA were to trigger the duty to set emission standards. Comment is also requested on how a program could be best structured to assure that conversions conducted by engine manufacturers (OEMs), independent shops, and in the field by certified power plant mechanics are performed to fully meet the intent of a possible program without compromising the safety of those aircraft and engines. EPA also asks for comment on potential problems with this approach including suggested modifications, improvements, or other approaches. EPA is requesting comment on potential implications for international import and export of piston engines and aviation fuel, as well as potential impacts on international transport. Finally, EPA requests comment on how market incentives might be developed to encourage modification to run on unleaded aviation gasoline as part of a regulatory requirement.

As part of the responses to the **Federal Register** notice EPA published in November 2007 entitled "Petition Requesting Rulemaking to Limit Lead Emissions from General Aviation Aircraft," EPA received a number of comments addressing both technology and fuel-based options as potential measures to reduce or eliminate lead in avgas.[205] In addition to these comments, EPA is aware of completed and ongoing work done under the auspices of the Coordinating Research Council and more recent viewpoints and efforts put forth by industry trade associations, airframe/engine manufacturers, specialty vendors, aviation user groups, and other innovators. The work and perspectives of these groups on technology and avgas fuel quality options are important, and EPA asks for further comment reflecting any new data on technology developments, fuel formulation approaches, or other technical viewpoints.

According to Department of Energy data, annual demand for aviation gasoline is very small in comparison to motor gasoline yet its use is as geographically widespread. This of course creates challenges for supply, distribution, and storage. EPA asks for comment on the avgas refining locations and practices, supply (including imports and exports, if any), details on distribution to terminals and airports, and storage practices for avgas at terminals and airports across the country. EPA is also interested in comments on progress and timeframes for developing alternatives to current leaded avgas and how these might be integrated into the fuel supply and distribution system.

[205] 72 FR 64570 (Nov. 16, 2007); EPA Docket EPA–HQ–OAR–2007–0294.

VII. Statutory and Executive Order Reviews

Under Executive Order 12866, entitled *Regulatory Planning and Review* (58 FR 51735, October 4, 1993), this is a "significant regulatory action" because of the cross-agency nature of this issue. Accordingly, EPA submitted this action to the Office of Management and Budget (OMB) for review under Executive Order 12866 and any changes made in response to OMB recommendations have been documented in the docket for this action. Because this action does not propose or impose any requirements, other statutory and Executive Order reviews that apply to rulemaking do not apply. Should EPA subsequently determine to pursue a rulemaking, EPA will address the statues and Executive Orders as applicable to that rulemaking.

Nevertheless, the Agency welcomes comments and/or information that would help the Agency to assess any of the following: Tribal implications pursuant to Executive Order 13175, entitled *Consultation and Coordination with Indian Tribal Governments* (65 FR 67249, November 6, 2000); environmental health or safety effects on children pursuant to Executive Order 13045, entitled *Protection of Children from Environmental Health Risks and Safety Risks* (62 FR 19885, April 23, 1997) and human health or environmental effects on minority or low-income populations pursuant to Executive Order 12898, entitled *Federal Actions to Address Environmental Justice in Minority Populations and Low-Income Populations* (59 FR 7629, February 16, 1994). The Agency will consider such comments during the development of any subsequent rulemaking.

Dated: April 20, 2010.

Lisa P. Jackson,

Administrator.

[FR Doc. 2010–9603 Filed 4–27–10; 8:45 am]

BILLING CODE 6560–50–P

Federal Register

Wednesday,
April 28, 2010

Part III

Environmental Protection Agency

40 CFR Parts 9 and 63

National Emission Standards for Hazardous Air Pollutants: Gold Mine Ore Processing and Production Area Source Category and Addition to Source Category List for Standards; Proposed Rule

ENVIRONMENTAL PROTECTION AGENCY

40 CFR Parts 9 and 63

[EPA–HQ–OAR–2010–0239; FRL–9140–7]

RIN 2060–AP48

National Emission Standards for Hazardous Air Pollutants: Gold Mine Ore Processing and Production Area Source Category and Addition to Source Category List for Standards

AGENCY: Environmental Protection Agency (EPA).

ACTION: Proposed rule.

SUMMARY: EPA is proposing to add the gold mine ore processing and production area source category to the list of source categories subject to regulation under the hazardous air pollutant section of the Clean Air Act (CAA) due to their mercury emissions. EPA is also proposing national mercury emission standards for this category based on the emissions level of the best performing facilities which are well controlled for mercury. EPA is soliciting comments on all aspects of this proposed rule.

DATES: Comments must be received on or before May 28, 2010 unless a public hearing is requested by May 10, 2010. If a hearing is requested on this proposed rule, written comments must be received by June 14, 2010. Under the Paperwork Reduction Act, comments on the information collection provisions must be received by the Office of Management and Budget (OMB) on or before May 28, 2010.

ADDRESSES: Submit your comments, identified by Docket ID No. EPA–HQ–OAR–2010–0239, by one of the following methods:

- Follow the on-line instructions for submitting comments at the following Web address: *http://www.regulations.gov.*
- *E-mail:* Comments may be sent by electronic mail (e-mail) to *a-and-r-Docket@epa.gov,* Attention Docket ID No. EPA–HQ–OAR–2010–0239.
- *Fax:* Fax your comments to: (202) 566–9744, Attention Docket ID No. EPA–HQ–OAR–2010–0239.
- *Mail:* Send your comments to: Air and Radiation Docket and Information Center, Environmental Protection Agency, Mailcode: 2822T, 1200 Pennsylvania Ave., NW., Washington, DC 20460, Attention: Docket ID No. EPA–HQ–OAR–2010–0239. Please include a total of two copies. In addition, please mail a copy of your comments on the information collection provisions to the Office of Information and Regulatory Affairs, Office of Management and Budget (OMB), Attn: Desk Officer for EPA, 725 17th St., NW., Washington, DC 20503.
- *Hand Delivery or Courier:* Deliver your comments to EPA Docket Center, Room 3334, 1301 Constitution Ave., NW., Washington, DC 20460. Such deliveries are only accepted during the Docket Center's normal hours of operation, and special arrangements should be made for deliveries of boxed information.

Instructions: Direct your comments to Docket ID No. EPA–HQ–OAR–2010–0239. EPA's policy is that all comments received will be included in the public docket without change and may be made available online at *http://www.regulations.gov,* including any personal information provided, unless the comment includes information claimed to be confidential business information (CBI) or other information whose disclosure is restricted by statute. Do not submit information that you consider to be CBI or otherwise protected through *http://www.regulations.gov* or e-mail. The *http://www.regulations.gov* Web site is an "anonymous access" system, which means that EPA will not know your identity or contact information unless you provide it in the body of your comment. If you send an e-mail comment directly to EPA without going through *http://www.regulations.gov,* your e-mail address will be automatically captured and included as part of the comment that is placed in the public docket and will be made available on the Internet. If you submit an electronic comment, EPA recommends that you include your name and other contact information in the body of your comment and with any disk or CD–ROM you submit. If EPA cannot read your comment due to technical difficulties and cannot contact you for clarification, EPA may not be able to consider your comment. Electronic files should avoid the use of special characters, any form of encryption, and be free of any defects or viruses.

Docket: All documents in the docket are listed in the *http://www.regulations.gov* index. Although listed in the index, some information is not publicly available (*e.g.,* CBI or other information whose disclosure is restricted by statute). Certain other material, such as copyrighted material, will be publicly available only in hard copy form. Publicly available docket materials are available either electronically in *http://www.regulations.gov* or in hard copy at the EPA Docket Center, Public Reading Room, EPA West, Room 3334, 1301 Constitution Ave., NW., Washington, DC. The Public Reading Room is open from 8:30 a.m. to 4:30 p.m., Monday through Friday, excluding legal holidays. The telephone number for the Public Reading Room is (202) 566–1744, and the telephone number for the Air Docket is (202) 566–1742.

FOR FURTHER INFORMATION CONTACT: For questions about these proposed standards for gold mine ore processing and production, contact Mr. Chuck French, Sector Policies and Program Division, Office of Air Quality Planning and Standards (D243–02), Environmental Protection Agency, Research Triangle Park, North Carolina 27711, telephone number (919) 541–7912; fax number (919) 541–3207, e-mail address: *french.chuck@epa.gov.*

SUPPLEMENTARY INFORMATION: The information presented in this preamble is organized as follows:

I. General Information
  A. Does this action apply to me?
  B. What should I consider as I prepare my comments to EPA?
  C. Where can I get a copy of this document?
  D. When would a public hearing occur?
II. Addition to Section 112(c)(6) Source Category List
III. Background Information
  A. What is the statutory authority and regulatory approach for the proposed standards?
  B. What source category is affected by the proposed NESHAP?
  C. What are the production operations, emission sources, and available controls?
IV. Summary of the Proposed Standards
  A. Do these proposed standards apply to my facility?
  B. When must I comply with the proposed standards?
  C. What are the proposed standards?
  D. What are the testing and monitoring requirements?
  E. What are the notification, recordkeeping, and reporting requirements?
  F. What are the title V permit requirements?
  G. Emissions of Non-Mercury HAPs
  H. Request for Comments
V. Rationale for the Proposed Standards
  A. How did we select the affected source?
  B. How did we determine MACT?
  C. How did we select the testing, monitoring, and electronic reporting requirements?
VI. Impacts of the Proposed Standards
  A. What are the emissions, cost, economic, and non-air environmental impacts?
  B. What are the health benefits of reducing mercury emissions?
VII. Statutory and Executive Order Reviews
  A. Executive Order 12866: Regulatory Planning and Review
  B. Paperwork Reduction Act
  C. Regulatory Flexibility Act
  D. Unfunded Mandates Reform Act

E. Executive Order 13132: Federalism
F. Executive Order 13175: Consultation and Coordination With Indian Tribal Governments
G. Executive Order 13045: Protection of Children From Environmental Health and Safety Risks
H. Executive Order 13211: Actions Concerning Regulations That Significantly Affect Energy Supply, Distribution, or Use
I. National Technology Transfer and Advancement Act
J. Executive Order 12898: Federal Actions To Address Environmental Justice in Minority Populations and Low-Income Populations

I. General Information

A. Does this action apply to me?

The regulated categories and entities potentially affected by the proposed standards include:

Category	NAICS Code [1]	Examples of regulated entities
Industry: Gold Ore Mining	212221	Establishments primarily engaged in developing the mine site, mining, and/or beneficiating (*i.e.,* preparing) ores valued chiefly for their gold content. Establishments primarily engaged in transformation of the gold into bullion or dore bar in combination with mining activities are included in this industry.

[1] North American Industry Classification System.

This table is not intended to be exhaustive, but rather provides a guide for readers regarding entities likely to be affected by this action. To determine whether your facility would be regulated by this action, you should examine the applicability criteria in 40 CFR 63.11640 of subpart EEEEEEE (National Emission Standards for Hazardous Air Pollutants: Gold Mine Ore Processing and Production Area Source Category). If you have any questions regarding the applicability of this action to a particular entity, consult either the air permit authority for the entity or your EPA Regional representative, as listed in 40 CFR 63.13 of subpart A (General Provisions).

B. What should I consider as I prepare my comments to EPA?

Do not submit CBI to EPA through *http://www.regulations.gov* or e-mail. Send or deliver information identified as CBI only to the following address: Roberto Morales, OAQPS Document Control Officer (C404–02), Office of Air Quality Planning and Standards, Environmental Protection Agency, Research Triangle Park, NC 27711, Attention: Docket ID No. EPA–HQ–OAR–2010–0239. Clearly mark the part or all of the information that you claim to be CBI. For CBI contained in a disk or CD–ROM that you mail to EPA, mark the outside of the disk or CD–ROM as CBI and then identify electronically within the disk or CD–ROM the specific information that is claimed as CBI. In addition to one complete version of the comment that includes information claimed as CBI, a copy of the comment that does not contain the information claimed as CBI must be submitted for inclusion in the public docket. Information so marked will not be disclosed except in accordance with procedures set forth in 40 CFR part 2.

C. Where can I get a copy of this document?

In addition to being available in the docket, an electronic copy of this proposed action will also be available on the Worldwide Web (WWW) through the Technology Transfer Network (TTN). Following signature, a copy of the proposed action will be posted on the TTN's policy and guidance page for newly proposed or promulgated rules at the following address: *http://www.epa.gov/ttn/oarpg/.* The TTN provides information and technology exchange in various areas of air pollution control.

D. When would a public hearing occur?

If anyone contacts EPA requesting to speak at a public hearing concerning this proposed rule by May 10, 2010, a public hearing will be held on May 13, 2010. If you are interested in attending the public hearing, contact Ms. Pamela Garrett, Metals and Minerals Group (D243–02), Sector Policies and Programs Division, U.S. EPA, Research Triangle Park, NC 27711, telephone (919) 541–7966 e-mail address: *garrett.pamela@epa.gov* to verify that a hearing will be held. If a public hearing is held, it will be held at EPA's campus located at 109 T.W. Alexander Drive in Research Triangle Park, NC, or an alternate site. If a hearing is requested by May 10, 2010, any persons interested in presenting oral testimony at that hearing should contact Ms. Pamela Garrett at least 2 days in advance of the date of the public hearing.

II. Addition to Section 112(c)(6) Source Category List

Section 112(c)(6) of the CAA requires that EPA list categories and subcategories of sources assuring that sources accounting for not less than 90 percent of the aggregate emissions of each of the seven specified Hazardous Air Pollutants (HAP) are subject to standards under section 112(d)(2) or (d)(4). The seven HAP specified in section 112(c)(6) are as follows: alkylated lead compounds, polycyclic organic matter, hexachlorobenzene, mercury, polychlorinated biphenyls, 2,3,7,9-tetrachlorodibenzofurans, and 2,3,7,8-tetrachloridibenzo-p-dioxin.

In 1998, EPA published a list of section 112(c)(6) categories (63 FR 17838, April 10, 1998). At that time, there was very little available information on mercury emissions from gold mine ore production and processing. Since the 1998 notice, a substantial amount of data and information have become available on mercury emissions from this source category. For example, in 2000, the first estimates of mercury emissions from this source category were published in the Toxics Release Inventory (TRI), largely because of the lower TRI reporting threshold for mercury that went into effect about that time. Following this, from 2001 to 2005, additional data and information were collected through the Voluntary Mercury Reduction Program (VMRP), which was a collaborative agreement between the State of Nevada Division of Environmental Protection (NDEP), EPA's Region 9 Office, and four gold mining companies. Then, in 2005–2006 the EPA's Office of Air Quality Planning and Standards (OAQPS) and the NDEP sent questionnaires to a number of companies seeking additional information and data on mercury emissions. Moreover, starting in 2007 the NDEP has been requiring all facilities in Nevada to conduct annual mercury emissions tests. Based on these data collected over the past several years, along with information about the industry processing and production levels and activities in the early 1990s, EPA has estimated that the gold mine ore processing and production emitted about 4.4 tons of mercury during the

baseline year (*i.e.,* in 1990). These estimated mercury emissions in the 1990 inventory for gold mine ore processing and production are based on emissions from the following thermal processes at gold mine ore processing and production facilities: roasters, autoclaves, carbon kilns, pregnant storage solution tanks ("preg tanks"), electrowinning, melt furnaces, and retorts. We have updated our 1990 baseline emission inventory for section 112(c)(6) to reflect this contribution of mercury from gold mine ore processing and production and determined that this area source category contributed to the 90 percent of the aggregate emissions of mercury in 1990. Consequently, we are adding the gold mine ore processing and production area source category to the list of source categories under section 112(c)(6) on the basis of mercury emissions.

III. Background Information

A. What is the statutory authority and regulatory approach for the proposed standards?

As mentioned above, CAA section 112(c)(6) requires that EPA set standards under section 112(d)(2) or (d)(4). The mercury standards for the gold mine ore processing and production area source category are being established under CAA section 112(d)(2), which requires MACT level of control. Under CAA section 112(d), the MACT standards for existing sources must be at least as stringent as the average emissions limitation achieved by the best performing 12 percent of existing sources (for which the administrator has emissions information) for source categories and subcategories with 30 or more sources, or the best performing 5 sources for categories and subcategories with fewer than 30 sources (CAA section 112(d)(3)(A) and (B)). This level of minimum stringency is called the MACT floor. For new sources, MACT standards must be at least as stringent as the emission control that is achieved in practice by the best controlled similar source (CAA section 112(d)(3)). EPA also must consider more stringent "beyond-the-floor" control options. When considering beyond-the-floor options, EPA must consider not only the maximum degree of reduction in emissions of HAP, but must take into account costs, energy, and nonair quality health and environmental impacts when doing so.

B. What source category is affected by the proposed NESHAP?

The gold mine ore processing and production area source category consists of facilities engaged in processing gold ore to recover gold using one or more of the following process units: roasters, autoclaves, carbon kilns, melt furnaces, mercury retorts, electrowinning, and/or pregnant solution tanks. There were approximately 21 gold mine ore processing and production facilities operating these processes in the United States (U.S.) in 2008. The majority and the largest of these facilities are located in Nevada. The other facilities currently operating are in Alaska, California, Colorado, Montana, and Washington. In 2007, the U.S. gold mine industry produced about 240 metric tons of gold, and the value of gold mine production was about $5.1 billion.

C. What are the production operations, mercury emission sources, and available controls?

All gold mine operations in the U.S. begin by mining ores, generally using large earth moving equipment. The ore is then subject to crushing operations. After crushing, some ore may be pre-treated by roasting or autoclaving. Subsequent to these operations the ore undergoes some type of leaching process using a dilute cyanide solution. The cyanide binds with the gold (and various impurities including mercury) to produce a "pregnant" solution. The pregnant solutions are further processed using various thermal processes (*e.g.,* electrowinning, retorts and furnaces) to recover gold. The gold mine ore processing and production area source category covers the thermal processes that occur after the crushing, including roasting operations (*i.e.,* ore dry grinding, ore preheating, roasting, and quenching), autoclaves, carbon kilns, electrowinning, preg tanks, retorts and furnaces. Further details of the gold production processes are described in section C.2 below.

1. Historical Background on Mercury Emissions

Mercury, which is naturally present in the ores in various concentrations, enters the gold recovery processes with the gold mine ore. Most of this mercury is recovered as a by-product in the form of liquid elemental mercury, or as a mercury precipitate, placed in closed containers, and stored or sold to commercial metal companies. In addition, a notable amount of mercury is currently captured by mercury emission control devices (*e.g.,* in carbon media) and is not recovered for sale. Nevertheless, some portion of the mercury in the ore is liberated to the air during the thermal processes resulting in mercury emissions to the atmosphere. Without emissions controls the potential for mercury emissions from these facilities would be quite high.

In May 2000, EPA published the first estimates of mercury emissions for gold mine ore processing and production facilities as part of the EPA's TRI for year 1998. Total mercury air emissions reported to the TRI in the 1998–2001 timeframe for this source category were about 14,000 pounds per year. However, EPA estimated (in the 1999 National Emissions Inventory) that total mercury emissions from this category were higher (about 23,000 pounds in 1999), and the mining industry reported emissions to be 21,000 pounds in 2001. Even at that time, some facilities had controls on processes to limit mercury emissions. Early efforts to reduce or limit mercury emissions were due in part to concerns about worker exposure to mercury. For example, for years facilities that were processing ores with higher levels of mercury have been using retorts to condense and capture the mercury in liquid elemental form. Moreover, two of the largest facilities have been using mercury specific emissions controls on their roasters since the mid-1990s. Also, a number of facilities had carbon adsorption beds to control mercury emissions on various thermal process units prior to 2001. We estimate that without these early controls the potential emissions would have been much higher than 23,000 pounds (at least 37,000 pounds).

Since 2001, mercury emissions from gold mine ore processing and production have been further reduced. The reductions achieved since 2001 were obtained through programs implemented by the NDEP, EPA, and industry. The first program for reducing mercury emissions from these facilities was the Voluntary Mercury Reduction Program (VMRP). The VMRP was a voluntary partnership between the NDEP, EPA Region 9, and four large gold mining companies. The main goal of the VMRP, which was officially adopted in June 2002, was to achieve significant, permanent and rapid reductions in mercury air emissions from precious metal processing operations. The VMRP focused on 5 large facilities in Nevada that accounted for most of the reported emissions in 2001. Some mercury emission reductions were quickly achieved by adding emission controls to some of the thermal units that emit mercury at these facilities.

To achieve further reductions in mercury emissions, the NDEP converted the VMRP into a regulatory program, called the Nevada Mercury Control Program (NMCP). As described on the NDEP Web site, the NMCP is a State

regulatory program that supersedes and replaces the VMRP and requires best available mercury emissions control technology on all thermal units located at all precious metal mines in Nevada. The NMCP was adopted March 8, 2006 and made effective May 4, 2006. The NMCP is a case-by-case permit program in 2 phases. The NMCP also had an early reduction program, which provided incentives for facilities to add controls within the first 2 years of the program (by mid-2008). A few facilities in Nevada took advantage of the early reduction program and added mercury specific controls (sulfur impregnated carbon filters) in 2007 on various thermal units.

In Phase 1 of the NMCP, which has recently been completed, permits were issued that require comprehensive work practice standards for the proper operation of existing mercury controls and the operations of the thermal units to minimize mercury emissions until specific controls are identified later under Phase 2 of the program. Phase 1 also required annual stack testing, site inspections and emissions reporting to collect data to assist in mercury emissions controls determinations in Phase 2. Emissions data collected in Phase 1 of the NMCP were used in the development of this proposed rule. Phase 2 has begun issuing permits and all permits are scheduled for issuance by the end of calendar year 2010. Implementation of controls will begin shortly after permit issuance. The Phase 2 permit process is a technology review and engineering analysis to determine the best available control technology and mercury emission limits. Controls and mercury emissions limits will be determined on a case-by-case analysis and will be unique to the individual unit (not universal for the unit type). The NMCP is a control-based program that will require thermal units in Nevada to have a best available mercury control technology installed. The NDEP and EPA have coordinated on the review and analyses of data on emissions, controls, and monitoring approaches for mercury emissions from this category, and collaborated to assure that the State program could co-exist and provide an additional level of control for facilities in Nevada while working in concert with the proposed National standards.

As described further below, several facilities already have effective mercury emissions controls in place on various thermal units. We expect that a number of other facilities will need to add mercury controls to comply with emissions limits set forth in this NESHAP, resulting in further emissions reductions from this category.

2. Description of Gold Mine Ore Processing and Production

The gold mine ore processing and production source category consists of the following processes: roasting operations, autoclaves, carbon regeneration kilns, electrowinning cells, pregnant solution tanks, mercury retorts, and melt furnaces. Each facility may not have every one of these processes because there are different production paths that can be taken to recover gold from mine ore. Mercury can be emitted from each of these thermal processes. Some of these processes are already well controlled for mercury emissions; however, there are some process units at several plants that are only partly controlled or uncontrolled for mercury.

The first step in gold mining is extracting the gold-containing ores from surface or undergrounds mines, generally by using large-scale earthmoving equipment. Samples of ore are examined to determine grade and metallurgical characteristics. Broken rock is marked by type for efficient processing. Based on its metallurgical makeup, the ore is delivered to the proper processing location. Low grade ore is roughly broken into small chunks, and high grade ore is delivered to a grinding mill, where the ore is pulverized to a powder (milled ore).

Depending on its metallurgical and other characteristics, the ore may be pretreated in a roaster or autoclave prior to leaching, or it may be sent directly to a leaching circuit without pretreatment. The two main types of ore are oxide ore and refractory ore. If the process of cyanide leaching can extract most of the gold contained in an ore with no pretreatment, the ore is referred to as oxide ore; otherwise, the ore is described as refractory ore. Oxide ore is sent directly to the leaching circuit where cyanide is used to liberate the gold. However, refractory ores contain organic carbon and/or sulfide mineral grains which inhibit the efficient recovery of gold during cyanide leaching. Roasters and autoclaves are used to oxidize the ore and remove these components. Refractory ore containing carbon and sulfur is roasted to over 1000 °F, burning off the sulfide and carbon. The product of this process, which is now basically an oxide ore, is routed to a leaching circuit. Sulfide refractory ore without carbon is oxidized in an autoclave to liberate the gold from sulfide minerals; then it is sent to a leaching circuit. At all facilities, the ores are eventually sent to some type of cyanide leaching process.

Lower grade oxide ores generally undergo a heap leaching process, whereby the ore is spread over large areas and dilute cyanide solution is slowly dripped through and collected on liners and channels. During the leaching process, cyanide binds with gold and other elements (including mercury) producing a “pregnant” cyanide solution. At most facilities that use this process, the next step involves pumping the pregnant cyanide-gold solution to tanks with activated carbon where the gold is adsorbed (collected) out of solution onto the activated carbon, and the remaining cyanide solution is largely recycled. This carbon adsorption step that follows the cyanide leaching is generally referred to as the “carbon-in-column” process.

Higher grade ores are generally milled. If the ore is a higher grade “oxide ore,” it is milled and then generally sent directly to carbon-in-leach processes where activated carbon is added along with the milled ore and cyanide solution in tanks where the cyanide-gold complexes adsorb onto activated carbon. In these units the leaching and carbon adsorption occur together. If the higher grade ore is a refractory ore, it is roasted or autoclaved first, then it is sent to carbon-in-leach processes.

However, a few facilities do not use carbon. Instead, these facilities use a different, zinc precipitate process, which is described later in this preamble.

At all the facilities that use a carbon adsorption process, the gold loaded carbon (which also contains mercury and other constituents) is moved into a vessel where the gold is chemically stripped from the carbon typically by using a concentrated caustic cyanide solution, producing a concentrated cyanide-gold solution. Gold (along with other metals and minerals) is drawn from this concentrated solution electrolytically (in electrowinning cells). The concentrate from the electrowinning cells is usually sent to a filter press to remove excess moisture and then to a retort followed by a melt furnace. However, some facilities do not have retorts. These facilities dry the concentrate and then feed it directly to the melt furnace. Either way, the gold is melted in furnaces into dore (pronounced “doh-rey”) bars containing up to 90 percent gold. Dore bars are subsequently sent to an external refinery to be refined to bars of 99.9 percent or more pure gold. The processing steps are discussed in more detail below. For processing steps that emit mercury, the

discussion below also describes the points of mercury emissions and available controls for such emissions.

3. Pretreatment of Refractory Ore

As mentioned above, refractory ores have to be pretreated by furnace oxidation (ore roasting) and/or pressure oxidation (autoclaving) before they can be ready for cyanide leaching.

Roasting Operations. The roasting operations that are sources of mercury emissions include ore dry grinding where the ore is ground and dried, preheating prior to roasting, roasting, and quenching. The roaster is by far the process unit with the greatest potential for mercury emissions because of the large quantity of ore processed and the high roasting temperatures, which readily volatilize available mercury from the ore. The mercury concentrations in the roasted ores are high enough that elemental mercury can be recovered from the roaster exhaust gas by condensation. The emission potential of the ancillary roasting operations (dry grinding, pre-heating and quenching) are much less than those from the roaster because they are operated at much lower temperatures. Dry grinding of the ore prior to roasting is primarily a source of particulate matter (PM) emissions; consequently, baghouses are used for PM emission control. Ore preheaters used to raise the ore temperature to facilitate roasting are typically equipped with baghouses or wet scrubbers, which control particulate and some oxidized mercury. Emissions from quenching (when the roasted ore is cooled) are controlled by wet scrubbers, which remove particulate and some oxidized mercury.

Ore roasting is a combustion process where the milled ore is oxidized in a fluidized bed roaster. During the combustion process, ore components that interfere with the cyanide leaching of gold are oxidized and therefore removed. As the ore exits the combustion chamber, it typically enters a quench process, where the temperature is reduced by contact with cooling water and the generation of steam. The steam from the quench process is used as a heat source in other processes at the mill, or may be sent directly to a cooling tower.

There are three gold mine ore processing and production facilities that have a total of six roasters. The mercury emissions generated during roasting are mainly in gaseous elemental or oxidized forms of mercury. A very small portion of the mercury emitted is in particulate or particulate-bound form. Each of these roasters has complex gas treatment systems to control not only these forms of mercury, but also to control PM, sulfur dioxide (SO_2), nitrogen oxides (NO_X), and carbon monoxide (CO). The PM control devices remove particulate mercury and some oxidized mercury. A significant amount of the elemental mercury is removed and recovered by condensation (either in a condenser or gas cooling device), and the three facilities with roasters use mercuric chloride scrubbers. These scrubbers use a mercuric chloride scrubber liquor to complex with mercury in the exhaust gas to precipitate a mercurous chloride byproduct (calomel). These scrubbers are also referred to as "calomel scrubbers." The calomel precipitate is subsequently removed and is either sent to electrowinning to recover the mercury, disposed of offsite as a waste material, or a portion may be chlorinated to create fresh mercuric chloride for the calomel scrubber liquor. An example of the emissions controls and gas treatment train for a roaster includes a hot gas electrostatic precipitator (ESP), wash tower, gas coolers, fluorine tower, wet ESP, calomel scrubber, acid plant (for removal of SO_2 and conversion to sulfuric acid product), peroxide scrubber (to control NO_X), and regenerative thermal oxidizer (for CO).

Autoclaves. Autoclaves are pressure oxidation vessels that are used to pretreat ores to increase gold recovery by cyanide leaching. The milled ore is mixed with water to form a slurry, and is then acidified with sulfuric acid. The acidified slurry is then pumped into the autoclave vessel, where oxygen is used to increase the vessel pressure to over 300 pounds per square inch, and the slurry is heated to 350 °F to 430 °F. The slurry is agitated in the reaction vessel and is then discharged to a pressure relief chamber. There the liquid content is flashed to steam, recovered, and returned to the pressurized segment of the vessel.

Most mercury is present in the gold ore as mercury sulfide, and during autoclaving, the mercury sulfide combines with oxygen to form mercury sulfate, which dissociates to some degree in the slurry. Consequently, the mercury present in gaseous emissions from the autoclave is mainly in the oxidized form.

Three facilities have a total of eight autoclaves. All of the autoclaves are equipped with wet venturi scrubbers, which remove most of the particulate mercury and a significant portion of the oxidized mercury present in the emissions. Venturi scrubbers have a specially designed "throat" that increases the gas speed through the throat and shears spray droplets to smaller sizes, which enhances mixing of the droplets and particles and increases coagulation and collection.

4. Leaching

As mentioned above, leaching generally takes place either directly after crushing or milling, or after roasting or autoclaving. In heap leaching, a dilute alkaline cyanide solution is distributed onto crushed ore. The solution percolates through the ore, and the gold reacts with free cyanide to form soluble gold-cyanide complexes. The complexes migrate with the solution to an impermeable liner and flow to a collection pond.

The solution containing the precious metals is called the "pregnant" cyanide solution. During this process, mercury, also present in the ore, may be leached into the gold-cyanide solution.

Refractory ores, which have been roasted or autoclaved, are generally leached in reaction vessels, referred to as vat leaching. Activated carbon adsorbent is usually added to the leach vessels to improve gold recovery. All five facilities in the U.S. that employ roasters and/or autoclaves add activated carbon to these leach vessels, where the leaching and carbon adsorption occur simultaneously in the tank. This is called the "carbon-in-leach" process.

5. Carbon Adsorption Process

As mentioned above, after leaching, the most common path for recovering gold from the cyanide solution is carbon adsorption, where the gold complexes in the pregnant solution are concentrated through adsorption onto activated carbon. If mercury is present in the gold-cyanide solution, it is also adsorbed onto the carbon. The gold-bearing solution may be extracted from the leaching process and subsequently introduced into a carbon adsorption column for concentration of the gold content (*i.e.,* the carbon-in-column process), or carbon may be added into the leach process concurrent with leaching from the ore (*i.e.,* the carbon-in-leach process). All of these carbon adsorption processes produce a "loaded" carbon, which contains gold and mercury (and some other metals such as copper) as adsorbed cyanide complexes.

6. Carbon Desorption Processes

The loaded carbon is then separated from the rest of the solution or slurry by physical separation processes (such as with a screen). The remaining cyanide solution is now considered "barren" and can either be recycled back to the barren pond for use in the heap leaching process, sent directly to the tailings impoundment (if the cyanide

concentrations are low), or sent to a cyanide destruction process and then to a tailings impoundment once the cyanide levels are sufficiently low.

The loaded carbon, which contains gold-cyanide complexes, mercury, and other metals, is stripped in a carbon strip tank to recover gold (and other metals) typically using a heated caustic cyanide solution. Adsorbed gold, as well as adsorbed silver, mercury, and other metals are stripped from the carbon through desorption under pressurized or atmospheric conditions, resulting in a more concentrated gold-containing solution.

7. Description of Thermal Units Used After Carbon Desorption

Carbon kilns. After gold has been removed from the activated carbon through the stripping process, the carbon is usually regenerated and then recycled back to the adsorption process. Regeneration is performed to regain the adsorption capacity of the carbon. Rotary kilns known as carbon kilns are used to regenerate the spent carbon. Because the carbon can be oxidized in the kiln if air is present in the heating chamber, steam is introduced to the kiln to prevent the infiltration of air. As the carbon moves through the carbon kiln, it is heated, and mercury and other remaining components are desorbed into the gas stream in the kiln. Regenerated carbon exits the kiln and is captured and quenched, and the gas stream is vented from the process, along with combustion gas from heating the kiln chamber. The off-gas, containing steam and mercury, is discharged to a pollution control device, such as a carbon adsorber. The potential for mercury emissions from carbon kilns is directly dependent on the mercury content of the stripped carbon and whether there is a carbon adsorber or other device to control mercury emissions.

There are approximately 16 facilities with 18 carbon kilns. Most of these carbon kilns have installed carbon adsorption units to control mercury emissions, and some other facilities in Nevada have proposed in their State permit applications under the NMCP to install carbon adsorbers on their carbon kilns. One facility uses a hypochlorite scrubber on its carbon kiln which oxidizes the elemental mercury to a more soluble form and removes it as mercuric chloride.

Pregnant storage solution tanks (“preg tanks”). The concentrated gold-containing solution that was stripped from the carbon is transferred to a preg tank, which serves as a storage and feed tank to the electrowinning process (discussed below). The concentrated solution also contains mercury, and mercury vapor can be emitted from the preg tank vent. Two facilities have installed carbon adsorbers on their preg tanks. In addition, five facilities in Nevada have proposed in their State permit applications under the NMCP to install carbon adsorbers on their preg tanks.

Electrowinning cells. Recovery of gold, along with co-precipitated metals such as silver and mercury, from concentrated carbon strip solutions is performed in one of two ways: Electrowinning (the most common process) or precipitation with zinc powder (discussed below). Separation of gold through electrowinning is achieved by using an electric potential to plate the gold (and other metals present) in solution onto a cathode; steel wool is typically used as the plating surface because of the large surface area it provides for gold deposition. The plated cathode, or sponge, is then either removed from the electrowinning cell, so that the gold-bearing sludge-like material can be removed from the plated cathode, or the plated cathode can be left in the electrowinning (EW) cell, but the current is turned off and the remaining solution is drained out, then the material is removed from the plated cathode. Either way, once the current has stopped, the gold-bearing sludge-like material (known as “EW concentrate”) is separated from the cathode by physical means (such as shaking). The gold-bearing EW concentrate is then ready for further processing. During electrowinning, elemental mercury can vaporize and escape from the cell with the other gases produced in the process; carbon adsorption filters are effective in controlling these mercury emissions.

There are approximately 17 electrowinning units located at 14 plants. Five facilities have installed carbon adsorbers to control mercury emissions from electrowinning. In addition, four facilities in Nevada have proposed in their State permit applications under the NMCP to install carbon adsorbers on their electrowinning units.

Retorts. The EW concentrate may contain up to sixty weight percent gold, depending on the mercury content of the cyanide solution, the presence of other metals and minerals in the material, and the configuration of the gold recovery process. EW concentrate with significant mercury content is treated in a retort to remove mercury moisture and other impurities. In this process, the EW concentrate is placed in a pot or tray that is loaded into a heated oven under vacuum pressure, usually for 12 to 24 hours at 600 °C to 700 °C to remove up to 99 percent of the mercury. The EW concentrate is heated, mercury is vaporized and then pulled through a condenser where it condenses forming liquid mercury. The liquid mercury is recovered and sent through a tube into a collection vessel. The remaining gold and silver at the end of the retorting process typically contains less than 1 percent mercury (*e.g.,* 1,000 to 8,000 mg/kg). The condenser allows some mercury to discharge in the off gas, and a loss of 0.4 to 0.7 percent of the mercury from the condenser has been reported. There are approximately 12 facilities that operate retorts, and all operate the retort with a condenser and a carbon adsorption filter. A properly designed and maintained carbon adsorption filter located downstream of the condenser is expected to capture about 95 percent of the mercury in the cooled gas.

Melt furnaces. Smelting is the last step in gold mine ore processing and production before the gold is sent to an off-site commercial gold refinery. Even after retorting, the retorted gold mixture still contains some impurities, including small concentrations of base and ferrous metals, and some residual mercury. During this last step, the retorted gold mixture (or EW concentrate for facilities that do not have retorts) is melted in a refinery melt furnace, along with a flux material that preferentially absorbs impurities, to produce a purified commercial mixture of gold known as dore. The furnace is heated to approximately 1500 °C. Most of the remaining mercury is volatilized in the melt furnace as elemental mercury or oxidized mercury. The dore melt is poured into bars, and any flux slag that hardens on the bars is removed with a mechanical chipper. The bars are then shipped to a commercial gold refinery, where they are further processed to produce gold bullion (99.9 percent pure gold).

There are approximately 24 melt furnaces at 17 gold mine ore processing and production facilities. All of the melt furnaces are equipped with either fabric filters, ESPs, wet scrubbers, or a combination thereof to control emissions of PM. The wet scrubbers also remove most of the oxidized mercury, but do not remove elemental mercury. Six facilities have installed carbon adsorbers to control both oxidized and elemental mercury emissions from their melt furnaces. In addition, three facilities in Nevada have proposed in their State permit applications under NMCP to install carbon adsorbers on their melt furnaces.

8. Non-Carbon Concentrate Process

After leaching, approximately four facilities recover the gold from the cyanide solution without using carbon by a process commonly known as the Merrill-Crowe (MC) method. The cyanide solution containing gold is separated from the ore by methods such as filtration and counter current decantation and clarified in special filters, usually coated with diatomaceous earth to produce a clarified solution. Zinc dust is then added to the clarified solution. Because zinc has a higher affinity for cyanide ions than does gold or other metals, zinc is dissolved and gold, silver, and mercury precipitate as a solid. The fine particulate metals are recovered by filtration processes. This process is performed in deoxygenated, enclosed reaction cells.

The precipitate (also known as MC concentrate) is processed in retorts and melt furnaces, which are described above. The retorts and melt furnaces are the sources of mercury emissions at facilities that use non-carbon concentrate processes, and these processes are equipped with carbon adsorbers or venturi scrubbers to control mercury emissions. These facilities do not have carbon kilns since they do not use carbon.

IV. Summary of the Proposed Standards

A. Do these proposed standards apply to my facility?

These proposed mercury standards would apply to gold mine ore processing and production facilities that are area sources that use any of the following thermal processes: Roasting operations, autoclaves, carbon kilns, preg tanks, electrowinning, retorts, and melt furnaces. Separate mercury standards are proposed for each of the following three affected sources: (1) Ore pretreatment processes (roasting operations and autoclaves), (2) carbon processes (carbon kilns, preg tanks, electrowinning, retorts, and melt furnaces at facilities that use carbon to recover the gold from the cyanide solution), and (3) non-carbon concentrate processes (retorts and melt furnaces at facilities that do not use carbon to recover gold).

We are proposing standards for both new and existing affected sources. An affected source is an existing source if construction or reconstruction commenced on or before April 28, 2010. An affected source is a new source if construction or reconstruction commenced after April 28, 2010.

B. When must I comply with the proposed standards?

We are proposing that the owner or operator of an existing affected source comply with the final rule no later than 2 years after publication of that rule in the **Federal Register**. The owner or operator of a new affected source is required to comply by the date of publication of the final rule in the **Federal Register** or upon startup of the affected source, whichever occurs later.

C. What are the proposed standards?

We are soliciting comments on all aspects of this proposed rule including, but not limited to, the data and calculations used to establish the emissions limits, the proposed testing and monitoring for emissions, and the parametric monitoring of control devices.

The proposed standards are summarized in Table 1 of this preamble and discussed in more detail below. These proposed standards establish mercury MACT emission limits for three affected sources. The proposed MACT standard for new and existing ore pretreatment processes is 149 pounds of mercury per million tons of ore processed (149 lb/million tons). The proposed MACT standard for existing carbon processes is 2.6 pounds of mercury per ton of concentrate processed (2.6 lb/ton of concentrate), and for new carbon processes is 0.14 pounds of mercury per ton of concentrate (0.14 lb/ton of concentrate). Concentrate is the gold-bearing sludge material that is processed in retorts. For facilities without retorts, concentrate is the quantity processed in melt furnaces before any drying. For new carbon processes, we are proposing a compliance alternative of 97 percent control efficiency. This alternative provides at least equivalent HAP reductions as the MACT floor.

TABLE 1—SUMMARY OF PROPOSED MERCURY EMISSION LIMITS

Affected source	Mercury emission limit	
	Existing source	New source
Ore pretreatment processes	149 lb/ton of ore	149 lb/ton of ore.
Carbon processes	2.6 lb/ton of concentrate	0.14 lb/ton of concentrate or 97 percent reduction in uncontrolled emissions.
Non-carbon concentrate processes	0.25 lb/ton of concentrate	0.20 lb/ton of concentrate.

The proposed MACT standard for existing non-carbon concentrate processes is 0.25 pounds of mercury per ton of concentrate processed (0.25 lb/ton of concentrate processed), and for new non-carbon concentrate processes is 0.20 lb/ton of concentrate processed.

D. What are the testing and monitoring requirements?

1. Testing for Compliance With Emission Limits

Any stack that is a discharge point for any thermal process at a gold mine ore processing and production facility would be tested for mercury emissions based on the average of a minimum of three runs per stack at least once annually (*i.e.,* once every four successive calendar quarters) using EPA Method 29 in Appendix A–8 to part 60, the Ontario Hydro Method (ASTM D6784–02, "Standard Test Method for Elemental, Oxidized, Particle-Bound and Total Mercury in Flue Gas Generated from Coal-Fired Stationary Sources"), EPA Method 30A, or EPA Method 30B, both in Appendix A–8 to part 60.

We are proposing that the initial compliance test for new sources be conducted within 180 days of the compliance date. The emissions for each process stack (in lb/hr) would be multiplied by the number of hours the process operated in the 6-month period following the compliance date to determine the total mercury emissions for the initial 6-month period. The process inputs used in the denominator of the emission limit, including ore and concentrate, would be measured and summed for each month to provide the total input (in tons) for the initial 6-

month period following the compliance date. The sum of the emissions (in lbs) for the 6-month period for all process units included in the affected source would be divided by the total input for the 6-month period to determine compliance with the emission limit. After the initial 6-month period, all the stacks for the thermal process units would be tested for mercury emissions annually.

We are proposing that existing sources also conduct their initial compliance test within 180 days of their compliance date. The emissions for each process stack (in lb/hr) would be multiplied by the number of hours the process operated in the 6-month period following the initial compliance date to determine the emissions for the 6-month period. The emissions for each process stack would be recorded in total pounds of mercury for the 6-month period. The total mercury emissions for the affected source for the 6 months would be determined by summing the emissions for each process stack included in the affected source. The total emissions for the 6-month period for the affected source would be divided by the process input (concentrate or ore) for the 6-month period to determine compliance with the emission limit.

After the initial 6-month period, all of the stacks for the thermal process units at new and existing sources would be tested for mercury emissions annually. The total mercury emissions and process inputs for each 12-month period would be calculated as described below to determine compliance with the emissions limit.

The process inputs used in the denominator of the emission limit, including ore and concentrate, would be measured and summed to provide the total input (in tons) for each month. For facilities with ore pretreatment processes, the daily quantity of ore (in tons) would be determined either by calibrated weigh scales or by measuring volumetric flow rate and density and multiplying the two measurements. The daily totals would be summed for each calendar month to provide a monthly total for ore input. For facilities with carbon and/or non-carbon processes affected sources, each batch of concentrate would be weighed by scales, and the total of all batches would be summed for each calendar month to produce monthly weights of concentrate.

Emissions in lb/million tons of ore for each affected source of ore pretreatment processes would be determined by summing the emissions for all units in the pre-treatment processes affected source for the appropriate time period (*e.g.,* a 6-month period initially for new and existing sources and the 12-month periods thereafter) and dividing this sum of the emissions by the sum of the total ore processed (expressed in millions tons) in all processes at the affected source for the appropriate time period (*i.e.,* 6 months or 12 months). Emissions in lb/ton of concentrate for each affected source of carbon processes would be determined by dividing the sum of the emissions from all carbon processes at the affected source for the appropriate time period by the sum of the tons of concentrate processed at the affected source for each time period. Emissions in lb/ton of concentrate for each non-carbon concentrate process affected source would be determined by dividing the sum of the emissions from all non-carbon concentrate process units at the affected source for each appropriate time period by the sum of the concentrate (expressed in tons) processed in all process units at the affected source for each time period.

Mercury testing at both the inlet and outlet of all mercury emissions control devices is proposed for new affected sources with carbon processes that choose to demonstrate a 97 percent reduction in emissions. The inlet and outlet of every process unit's control device would be sampled, and the mercury emissions before and after control (in lb/hr) would be multiplied by each process unit's operating hours for the appropriate time period to determine the mercury emissions for the time period. The initial tests would be done within 180 days of the compliance date. For the first 6 months of operation, the inlet emissions for all process units would be calculated and summed and compared to the sum of the calculated outlet emissions for the 6-month period. After the initial 6 months, annual tests would be conducted and the calculations would be based on each 12 month period to determine the percent reduction in mercury emissions.

We have also considered other procedures for calculating the mercury emission rate in pounds per ton of input to determine compliance for the ore pretreatment group and possibly for the carbon and non-carbon affected sources as well. For example, one approach for the ore pre-treatment processes would be to divide the measured emission rate (in pounds per hour) from the compliance test for each autoclave and roasting operation by the ore throughput (in tons per hour) for each autoclave and roasting operation as measured during the performance tests. The result would be emissions in pounds per ton of ore for each autoclave and roasting operation. Then the fraction of the total ore processed in the previous 12 months would be calculated for each roasting operation and autoclave, and the emissions from all autoclaves and roasting operations in the group would be calculated as the weighted average pounds per ton of ore to determine compliance (*i.e.,* the sum of fraction of total ore throughput times the pounds per ton for each roasting operation and autoclave). With this approach, it would not be necessary to monitor, record, and use the annual operating hours for each unit to calculate emissions. A similar approach could possibly also be used for the carbon and non-carbon groups. We are requesting comment and supporting information on the advantages and disadvantages of this possible alternative procedure and the proposed procedure for determining compliance from the ore pretreatment processes and the other process groups.

2. Monitoring Requirements

Roasters. We are proposing two options for monitoring roaster emissions: (1) Integrated sorbent trap mercury monitoring coupled with parametric monitoring of scrubbers and (2) monitoring using a continuous emission monitoring system (CEMS) for mercury. Both proposed monitoring options would require establishment of operating limits to detect and correct problems as soon as possible. An exceedance of an operating limit would trigger immediate corrective action and would require that the problem be corrected within 48 hours or that the feed of ore to the roaster be stopped.

The first option for monitoring emissions from roasters would be to use the EPA Performance Specification (PS) 12B for integrated sorbent trap mercury monitoring on a periodic basis coupled with parametric monitoring of mercury scrubbers. We propose that under this option the facility will sample and analyze weekly for mercury concentration according to PS 12B. To determine appropriate sampling duration, we propose that the owner or operator review the available data from previous stack tests to determine the upper 99th percentile of the range of mercury concentrations in the exit stack gas. Based on this upper end of expected concentrations, the facility would select an appropriate sampling duration that is likely to provide a valid sample and not result in breakthrough of the sampling tubes. If breakthrough of the sampling tubes occurs, the facility would re-sample using a shorter sampling duration.

We are proposing that the owner or operator of an affected source would establish an operating limit for mercury

concentration for PS 12B monitoring during the initial compliance test and maintain the mercury emissions below the established operating limit. The specific method and equation to be used to establish the operating limit are described in the proposed rule. If the operating limit is exceeded, the facility would report the exceedance as a deviation and take corrective actions within 48 hours to return the emissions control system back to proper operation.

In addition, we are proposing as part of this first monitoring option (*i.e.,* sorbent trap monitoring) that facilities with roasters and calomel-based mercury control systems (also referred to as "mercury scrubbers") also establish operating limits for various control parameters described below during their annual mercury compliance stack test. We are proposing that each mercury scrubber be equipped with devices to monitor the scrubber liquor flow rate, scrubber pressure drop, and inlet gas temperature. Minimum operating limits for the scrubber liquor flow rate and pressure drop would be established based on the lowest average value measured during any of the three runs of a compliant performance test. A maximum inlet temperature would be established based on the highest temperature measured during any of the three runs of the compliance test. In addition to the parameters described above, we are proposing that the facility must also monitor the mercuric ion concentration and the chloride ion concentration four times per day or continuously monitor the oxidation reduction potential and pH. These monitored parameters would be maintained within the range specified by the scrubber's manufacturer or within an alternative range approved by the permitting authority. If any of the parameters are outside the specified range or limit, corrective action would be taken to bring the parameters back to the operating range or limit or else the facility would commence shutdown of the roaster.

As mentioned above, we are including an alternative option for monitoring emissions from roasters, which is to install and operate a continuous emission monitoring system (CEMS) for mercury. Under this alternative option, facilities would not be required to do the parametric monitoring of the mercury scrubbers described above under the first option. A facility choosing the CEMS option would operate the mercury CEMS according to EPA Performance Specification (PS) 12A (except that calibration standards traceable to the National Institute of Standards and Technology (NIST) are not required). This exception is necessary because the mercury concentrations in the exhaust gases from roasters can be higher than the range of concentrations that are covered with the existing calibration standards traceable to NIST. The current calibration standards traceable to NIST do not apply to the full range of mercury concentrations that can be present in the exhaust gases from roasters. However, calibration standards are available from the manufacturers of mercury CEMS which can be used to calibrate these CEMS for monitoring of roasters.

In addition to following PS 12A, the facility would perform a data accuracy assessment of the CEMS according to section 5 of Appendix F in part 60. We are proposing that the owner or operator would establish an operating limit for mercury concentration for the CEMS during a compliance test for the roaster stack and monitor the daily average mercury concentration in the roaster stack exhaust gas with the CEMS. The specific method and equation to be used to establish the operating limit are described in the proposed rule. If any daily average concentration as measured with the CEMS exceeds the operating limit, the facility would report the exceedance as a deviation and take corrective actions within 48 hours to return the emission control system back to proper operation. Regardless of whether deviations occur, the owner or operator of any facility with a roaster would submit a monitoring plan that includes quality assurance and quality control (QA/QC) procedures sufficient to demonstrate the accuracy of the CEMS. At a minimum, the QA/QC procedures would include daily calibrations and an annual accuracy test for the CEMS.

For facilities that control roaster mercury emissions with mercury scrubbers, we are proposing not to require sorbent traps or mercury CEMs monitoring if a facility demonstrates that the mercury emissions from its roasters are consistently low and well controlled. Specifically, if a facility can demonstrate that mercury emissions from the roaster are less than 10 pounds of mercury per million tons of ore, then the facility would be allowed to discontinue the use of the sorbent trap or CEMS as described above. To demonstrate this, the facility would conduct three or more consecutive independent performance tests for mercury at least one month apart on the roaster exhaust stacks and show that emissions are less than 10 pounds per million tons of ore during normal operations for all tests. However, such a facility would be required to perform the parametric monitoring for mercury scrubbers and maintain parameters within the operating ranges established in accordance with the proposed rule. Also, the facility would continue to perform annual compliance tests of the roaster stack. Moreover, if there is an increase in the mercury concentration in the ore processed by the roaster that is higher than any concentration measured during the previous 12 months, then the facility would need to perform a compliance test within 30 days of the first day that the new ore is processed to determine whether the mercury emissions are still below 10 lbs per million tons of ore. If any subsequent performance compliance test indicates that the roaster is emitting more than 10 pounds of mercury per million tons of ore input, then the facility would be required to monitor the roaster emissions using the sorbent trap method or CEMS.

Carbon Adsorbers. For process units (such as furnaces, kilns, retorts, electrowinning, and autoclaves) that control mercury emissions with a carbon adsorber, we are proposing three emissions monitoring options. One proposed option involves monitoring the mercury concentration at the exit of the carbon bed. A second option is based on sampling the carbon bed for mercury. The third option is based on changing out the carbon bed after a fixed period of time determined based on historical operating experience.

For the first option (*i.e.,* the exit concentration monitoring option), the mercury concentration would be measured periodically using a sorbent trap according to EPA Method 30B. An operating limit would be established through sorbent trap measurements obtained during the initial compliance test. The mercury concentration would be measured during each annual performance compliance test of each of the stacks for the carbon processes using Method 30B. An operating limit would be calculated from the average mercury concentration measured during the compliance test multiplied by a factor. The factor is the MACT emission limit for carbon processes divided by the sum of results of the compliance test for all units within the carbon processes affected source. Thereafter, if the established operating limit is exceeded, the exceedance would be reported as a deviation and corrective action would be triggered (*e.g.,* replace the carbon in the bed). The specific equations to calculate the operating limit are described in the proposed rule. Initially, the facility would measure mercury concentration in the exit gas monthly using Method 30B. Once mercury

concentrations reach 50 percent of the operating limit, the facility would then need to perform weekly sampling and analysis using Method 30B. When the concentration reaches 90 percent of the operating limit, to prevent an exceedance, the owner or operator would be expected to replace the carbon in the control device within 30 days (or before the operating limit is actually exceeded).

The second proposed monitoring option, which is based on sampling the carbon bed for mercury, would require conducting an initial sampling of the carbon in the carbon bed 90 days after the replacement of the carbon to determine mercury loading. A representative sample would be collected from the carbon bed and analyzed using EPA Method 7471A, and the depth to which the sampler is inserted would be recorded. Based upon sample results, a carbon loading would be calculated for the system, and sampling would be performed quarterly thereafter. When the carbon loading reaches 50 percent of the design capacity of the carbon, monthly sampling would be performed until 90 percent of the carbon loading capacity is reached. The carbon would be removed and replaced with fresh carbon no later than 30 days after reaching 90 percent of capacity to ensure that the maximum mercury loading as recommended by the manufacturer is not exceeded.

The third proposed option would start with one of the two previous options. After collecting at least two years of data under one of the options described above, a facility would establish a change out time for the carbon based on the two years of monitoring and could implement this periodic change out instead of sampling and analysis after approval by the permitting authority. However, if there is any significant change in the process, input materials, or mercury control system (*e.g.,* an increase in operating rates or processing different ores with higher mercury levels) then sampling and analysis (according to the procedures in option 1 or option 2 described above) would be required within 30 days to re-establish the carbon change out time.

We are also proposing that the inlet stream to carbon adsorbers applied to autoclaves, carbon kilns, melt furnaces, and retorts be monitored for temperature and that the inlet temperature be maintained below the maximum temperature established during the compliance tests. If the maximum temperature is exceeded, the owner or operator would analyze the outlet concentration using Method 30B within 30 days as described above. If the concentration is below 90 percent of the operating limit, the owner or operator could set a new temperature operating limit 10 °F above the previous operating limit. On the other hand, if the concentration is more than 90 percent of the operating limit, the facility would take corrective action to reduce the temperature back down to below the maximum temperature recorded during compliance tests and then retest emissions using Method 30B. If the concentration is more than 90 percent of the operating limit based on this subsequent test, then the facility must replace the carbon.

Wet scrubbers. For each wet scrubber, we are proposing that pressure drop and water flow rate be maintained at a minimum level based on measurements during the initial or subsequent compliance test(s).

E. What are the notification, recordkeeping, and reporting requirements?

The owner or operator of an existing or new affected source would be required to comply with certain notification, recordkeeping, and reporting requirements of the NESHAP General Provisions (40 CFR part 63, subpart A), which are identified in Table 1 of this proposed rule. Each owner or operator of an affected source would submit an Initial Notification according to the requirements in 40 CFR 63.9(a) through (d) and a Notification of Compliance Status according to the requirements in 40 CFR 63.9(h).

Each owner or operator of an existing or new affected source would be required to keep records to document compliance with the mercury emission limits. Owners or operators of new and existing affected sources would maintain records of all monitoring data. Other records include monthly totals of ore quantity for ore pretreatment affected sources, monthly quantities of concentrate for all other affected sources, and monthly hours of operation for each process unit at each affected source.

If a deviation from this rule's requirements occurs, an affected source would be required to submit a compliance report for that reporting period. The proposed rule specifies the information requirements for such compliance reports.

We are also proposing to require electronic reporting of performance evaluation data collected using methods compatible with EPA's Electronic Reporting Tool (ERT). After December 31, 2011, within 60 days after the date of completing each performance evaluation conducted to demonstrate compliance, the owner or operator would submit the test data to EPA by entering the data electronically into EPA's WebFIRE database through EPA's Central Data Exchange. The owner or operator of an affected facility would enter the test data into EPA's database using the ERT or other compatible electronic spreadsheet. Only performance evaluation data collected using methods compatible with ERT would be subject to this requirement to be submitted electronically into EPA's WebFIRE database.

F. What are the title V permit requirements?

Under section 502(a) of the CAA, all major sources and certain other sources, including sources subject to section 112 standards, are required to operate in compliance with a title V permit. Today's proposal requires that gold mine ore processing and production area sources comply with the title V permitting requirements. However, section 502(a) of the CAA provides that the Administrator may exempt an area source category (in whole or in part) from title V if she/he determines that compliance with title V requirements is "impracticable, infeasible, or unnecessarily burdensome" on such category. We are therefore soliciting comment on whether such an exemption is appropriate under section 502(a) for any particular sources in this category. Commenters should provide supporting data and rationale to explain the bases for their comments.[1]

G. Emissions of Non-Mercury HAPs

EPA recently gathered data and evaluated emissions of other HAP, including cyanide and non-mercury metals. The data indicate that the gold mining processing and production category consists of only area sources (*i.e.,* facilities that emit less than ten tons per year of any one HAP and less than 25 tons per year of any combination of HAP). However, a few facilities are close to the major source threshold due to hydrogen cyanide (HCN). For example, the largest facility emits an estimated 5 to 9 tons of HCN per year. Emissions of all other HAPs, including mercury, are individually significantly lower than the 10 ton per year threshold for a single HAP and the 25 ton per year threshold for a

[1] For the factors that EPA considers in evaluating whether to exercise the Agency's discretion to exempt area sources from title V, please *see National Emission Standards for Hazardous Air Pollutants for Area Sources: Clay Ceramic Manufacturing, Glass Manufacturing, and Secondary Nonferrous Metal Processing; Proposed rule,* 72 FR 53838, 53849–53853 (September 20, 2007).

combination of HAP. However, depending on how facilities manage their cyanide processes, EPA believes that cyanide emissions could potentially change a facility's status from area source to major source. Although EPA would develop MACT standards if it ever identified any major sources of gold mine ore processing and production, the MACT standards in today's proposal apply only to area sources because those are the only gold mine ore processing and production sources EPA has identified.

In light of the above, we are considering including in today's NESHAP a provision under which sources may certify and demonstrate that they are area sources of gold mine ore processing and production. We would include in this area source NESHAP management practices for cyanide processes that we believe would effectively limit cyanide emissions and thus assure that sources maintain their area source status. To the extent sources were concerned about their HCN emissions, they could implement the management practices for cyanide processes specified in this rule and certify to the Agency that they had done so. Some management practices we are considering include: maintaining pH of cyanide leach solutions greater than nine; burying leach lines whenever practical and feasible; monitoring cyanide concentrations at the perimeter and in a downwind direction of main emission sources; not allowing puddles to form that are greater than 1 square meter on leach pads; and in locations that have the highest potential for concentrated emissions (*e.g.,* mixing tanks, CIL tanks, loading stations) maintain HCN air concentrations below a prescribed level (*e.g.,* 5 ppm).

We request comment on whether we should include the proposal described above or some modification of it. We also request comment on effective management practices to limit cyanide emissions, including the practices described above as well as other approaches to manage cyanide emissions.

H. Request for Comments

As mentioned previously, we are soliciting comments on all aspects of this proposed rule, including, but not limited to, the data and calculations used to establish the emissions limits for mercury, the proposed requirements and options for emissions testing and monitoring, the parametric monitoring options for control devices, title V permit requirements, and emissions of non-mercury HAPs.

V. Rationale for the Proposed Standards

A. How did we select the affected source?

We are proposing individual MACT standards for each of the following three affected sources in the gold mine ore processing and production source category: ore pretreatment processes, carbon processes, and non-carbon concentrate processes. These three affected sources reflect the three primary different types of processes used in this source category to produce gold. Moreover, many gold mine ore processing and production facilities combine the emissions from multiple process units within a single affected source and route them to a single mercury emission control system and stack. Because we cannot determine the mercury emissions from individual process units that share a stack, it is difficult to establish emission standards for each process unit within an affected source. Setting MACT standards for each of the three affected sources accommodates the various stack and control configurations for the process units within an affected source. Emissions from all process units in the affected source would be summed to determine compliance with the proposed MACT standard for that affected source.

As described above, the three affected sources differ in process operations, the sources of mercury entering the processes, and the nature of the emissions. Ore pretreatment processes include roasting operations (roasters, ore dryers, ore pre-heaters, and quenchers) and autoclaves that are used to pretreat refractory ore, which contains organic carbon and/or sulfide mineral grains that prevent the initial use of cyanide leaching to extract the gold effectively from the ore. Mercury enters these processes with the ore. The potential for mercury emissions from this affected source is directly related to the amount of ore processed in the autoclaves and roasters; the proposed standard for this affected source is therefore expressed in pounds of mercury emissions per million tons of ore processed (lb/million tons of ore).

Carbon processes include carbon kilns, electrowinning cells, melt furnaces, retorts, and preg tanks at facilities that use carbon to recover gold from pregnant cyanide solution. In developing a proposed format for the emission limit for carbon processes, we examined the use of loaded carbon, concentrate, and gold production in the denominator of a pound per ton format. In other NESHAPs, we have typically used the amount of feed throughput or the amount of product produced in the denominator of the emission limit. For example, in the proposed revisions to the Portland cement NESHAP (74 FR 21136, May 6, 2009), we analyzed the data and developed the MACT floor in terms of pounds per million tons of feed to the kiln and subsequently converted the emission limit to a format of pounds per million tons of clinker (*i.e.,* the product from the kiln). Although loaded carbon can be considered the "primary feed," we discovered there were potential issues with its measurements (*e.g.,* default values were used for density), we were unsure that the data from different facilities were comparable, and it was not a quantity that has been required to be reported under existing State regulatory programs. We rejected the use of gold produced because some facilities do not produce gold (they send the intermediate product to offsite refineries), some facilities produce more silver than gold, and the quantity of gold varies depending on the percent of gold in the product. The primary intermediate product that is common to all of the facilities with these carbon processes is the gold-bearing EW concentrate, which is the input to retorts or melt furnaces. Further, concentrate is closely related to the final product because it contains about 60 percent gold, and because of its value, it is carefully and accurately weighed and records of the quantities are kept. Concentrate is also required to be reported under the NDEP program, so we had comparable and reliable data from the different gold mine ore processing and production facilities. Consequently, we decided that the most appropriate format of the emission limit for the carbon processes is lb/ton of concentrate.

For the reasons discussed above, we are proposing the concentrate format. However, we also considered using the amount of loaded carbon for the denominator of the emission limit format for carbon processes instead of concentrate, and we believe there may be merit in using loaded carbon as the denominator. Therefore, we are soliciting comments on the merits of both formats. In particular, we seek comments on whether loaded carbon or concentrate would be the better format for compliance determinations (*e.g.,* accuracy and reliability of the measurements, availability of records) or for other reasons or factors, such as the processes present at a given plant, operating layout, or offsite shipments for processing. We are also requesting

comment on whether the quantity of concentrate should be determined on an "as fed" or dry basis, and if a dry basis, what methods could be used to determine dry weight accurately and reproducibly.

Non-carbon concentrate processes include retorts and melt furnaces at facilities that use the Merrill Crowe process to produce gold. These affected sources do not use carbon to recover gold and the only thermal process units used to recover gold ore are retorts and furnaces. As described above, during the non-carbon processes, zinc dust is added to the cyanide solution after leaching to precipitate gold and other metals (including mercury). The precipitate (or "MC concentrate") is then processed in retorts and metal furnaces, liberating mercury from the concentrate. The potential mercury emissions are therefore directly related to the amount of concentrate processed; consequently for this reason and the merits of using concentrate as discussed above, the proposed standard for this affected source is expressed in lb/ton of concentrate.

B. How did we determine MACT?

1. Selection of MACT Floors for Existing Sources for the Three Affected Sources

CAA section 112(d)(3)(B) requires that the MACT standards for existing sources be at least as stringent as the average emission limitation achieved by the best performing five sources (for which the Administrator has or could reasonably obtain emissions information) in a category with fewer than 30 sources. The gold mine ore processing and production source category consists of fewer than 30 sources. As mentioned above, we are proposing MACT standards for each of the following three affected sources: ore pretreatment processes, carbon processes, and non-carbon concentrate processes. We have mercury emissions data on ore pretreatment processes for all five facilities in the United States with ore pretreatment processes. We have mercury emissions data on carbon processes for 11 facilities and mercury emissions data on non-carbon concentrate processes for two facilities. Pursuant to section 112(d)(3), the MACT floor limits for existing ore pretreatment processes and carbon processes are based on the average emission limitation achieved by the best performing five facilities for each of these two affected sources, and the MACT floor limit for existing non-carbon concentrate processes are based on the average emission limitation achieved by the two facilities with such processes.

To calculate the MACT floor limit for each of the affected sources, we established and ranked sources' emissions from lowest to highest. The data on which we based the limits are expressed in terms of pounds of mercury emitted per ton of input, where the gold mine ore is the input for the ore pretreatment processes and concentrate is the input for the carbon processes and the non-carbon concentrate processes.

We used the emissions data for those best performing affected sources to determine the emission limits to be proposed, with an accounting for variability. EPA must exercise its judgment, based on an evaluation of the relevant factors and available data, to determine the level of emissions control that has been achieved by the best performing sources under variable conditions. The Court has recognized that EPA may consider variability in estimating the degree of emission reduction achieved by best-performing sources and in setting MACT floors. *See Mossville Envt'l Action Now* v. *EPA,* 370 F.3d 1232, 1241–42 (DC Cir 2004) (holding EPA may consider emission variability in estimating performance achieved by best-performing sources and may set the floor at a level that a best-performing source can expect to meet "every day and under all operating conditions").

To calculate the achieved emission limit, including variability, we used the equation: [2]

$$UPL = x_p + t * (v_T)^{0.5}$$

Where:

UPL = upper prediction limit (99 percent),
x_p = average of the best performing MACT pool sources,
t = Student's t-factor evaluated at 99 percent confidence, and
v_T = total variance determined as the sum of the within-source variance and the between-source variance.

The between-source variance is the variance of the average of the best performing source averages. The within-source variance is the variance of the MACT source average considering "m" number of future individual test runs used to make up the average to determine compliance. We are proposing that a compliance test would be based on the average of three runs; consequently, the value of "m" used in the statistical analysis is 3. This value of "m" is used to reduce the variability to account for the lower variability when averaging of individual runs is used to determine compliance in the future. For example, if the average of three test runs is used to determine compliance (m=3), the variability based on 3-run averages is lower than the variability of the single run measurements in the data base, which results in a lower UPL for the 3-run average.

Our MACT floor limit calculations are based primarily on mercury emissions data from annual testing that was required by NDEP for 2007 and 2008. However, we used data from 2006 for an autoclave at a Nevada facility that was not tested in 2007 and did not operate in 2008. We also used data from 2009 to replace 2008 test data at one Nevada facility that was invalidated due to not following the procedures in the State's testing protocol. In addition, we used 2010 test data for a Nevada facility that installed new mercury emission controls on its roasters and resumed operation in late 2009. The tests that generated the data described above generally consisted of three runs per test per process at each facility. There were cases where 2007 results represent emissions before a control device was installed, and 2008 test results were after a mercury emission control device had been installed. In those cases, we used only the 2008 (controlled) test results to determine the top performing facilities. Emissions from the tests (in lb/hr) were multiplied by the number of hours the process operated in the calendar year and then divided by the process input rate for the year (in tons) to calculate the facility's performance for an affected source (expressed as lbs of mercury emissions per ton of input material).

Source performance and the resulting MACT floor limits are summarized in Tables 2, 3, and 4, for ore pretreatment, carbon, and non-carbon concentrate processes, respectively.

TABLE 2—MACT FLOOR RESULTS FOR ORE PRETREATMENT

Facility	Average performance (lb/million tons ore)
A	62
B	64
C	69
E	90
D	211
Average of top 5	99
99% UPL existing (MACT Floor)	175
99% UPL new (MACT Floor)	163

[2] More details on the calculation of the MACT floor limits are given in the technical memo in the docket.

TABLE 3—MACT FLOOR RESULTS FOR CARBON PROCESSES

Facility	Average performance (lb/ton concentrate)
M	0.06
N	0.60
A	1.5
H	1.8
D	2.9
F	3.1
C	3.7
I	6.9
G	9.7
B	21
J	39
Average of top 5	1.4
99% UPL existing (MACT Floor)	2.6
99% UPL new (MACT Floor)	0.14

TABLE 4—MACT FLOOR RESULTS FOR NON-CARBON CONCENTRATE PROCESSES

Facility	Average performance (lb/ton concentrate)
K	0.07
L	0.11
Average of top 2	0.09
99% UPL existing	0.25
99% UPL new	0.20

The average emission rates for ore pretreatment and carbon processes from the top five facilities performing these processes are 99 lbs/million tons ore and 1.4 lb/ton of concentrate, respectively. The average emission rate for non-carbon concentrate processes from the top two facilities performing these processes is 0.09 lb/ton of concentrate. As previously discussed above, we account for variability in setting floors, not only because variability is an element of performance, but also because it is reasonable to assess best performance over time. Here, for example, we know that the 2 to 5 lowest emitting affected sources' emission estimates are averages and we expect that the actual emissions will vary over time. If we do not account for this variability, we would expect that even the sources that perform better than the floor on average would potentially exceed the floor emission levels part of the time.

For the lowest emitting sources (2 to 5 sources, depending on the affected source), we calculated an average emission rate using the data from multiple test runs for multiple processes. The results are shown in Tables 2, 3, and 4 and represent the average performance of each source from the sum of the average emissions from all process units within the affected source. We then calculated the average performance of the lowest emitting sources and the variances of the emission rates for each process unit, which is a direct measure of the variability of the data set. This variability includes the run-to-run and year-to-year variability in the total mercury input to each process unit and variability of the sampling and analysis methods over the testing period, and it includes the variability resulting from site-to-site differences for the lowest emitters. We calculated the MACT floor based on the UPL (upper 99th percent) as described earlier from the average performance of the lowest emitting sources, Students t-factor, and the total variability, which was adjusted to account for the lower variability when using 3-run averages to determine compliance. Our calculations yield the following MACT floor limits for existing sources: 175 lbs/million tons of ore for ore pretreatment processes, 2.6 lb/ton of concentrate for carbon processes, and 0.25 lbs/ton of concentrate for non-carbon concentrate processes.

The technologies for achieving the MACT floor for existing ore pretreatment processes include mercury scrubbers on roasters and venturi scrubbers on autoclaves and ancillary roaster operations. The roasters and autoclaves at Facilities A, B, C, and E shown in Table 2 above are already equipped with these controls. Our MACT floor analysis indicates that these facilities are achieving the MACT floor average of 99 lb/million tons of ore. The analysis also indicates that an emission reduction will be needed for Facility D to achieve the MACT floor. Currently Facility D also has venturi scrubbers on its autoclaves; however, the emission control performance of these scrubbers will need to be improved to achieve the MACT floor.

To achieve the MACT floor for existing carbon processes, we expect that facilities would need to install carbon adsorbers on all process units that do not already have them (*i.e.,* carbon adsorbers for carbon kilns, electrowinning, preg tanks, retorts, and melt furnaces). Our MACT floor analysis indicates that only Facilities M and N in Table 3 are achieving the MACT floor level of control; consequently, the other nine facilities in Table 3 are expected to have to install carbon adsorbers on all process units that do not already have them. The two top performing facilities (M and N) are fully equipped with carbon adsorbers (*i.e.,* all of their process units are controlled by carbon adsorbers). Facility M also processes ore which has significantly lower mercury concentrations compared to the ore processed at most other facilities. We believe the combination of processing ore with low mercury content and the use of state-of-the-art mercury emission controls result in emissions at Facility M that are considerably lower than the other facilities.

For the non-carbon concentrate processes, the MACT floor technology is the use of carbon adsorbers on retorts and melt furnaces. We expect that Facility L would probably need to install a carbon adsorber on their melt furnace to achieve the MACT floor.

2. Selection of New Source Floors for the Three Affected Sources

CAA section 112(d)(3) requires that the MACT floor limit for new sources not be less stringent than the emission control that is achieved in practice by the best controlled similar source. Table 2 above shows that Facility A has the lowest emission rate for ore pretreatment processes and is therefore considered the "best controlled similar source" for such processes. As previously mentioned, this facility is equipped with calomel scrubbers on roasters and venturi scrubbers on autoclaves. The emission rate for ore-pretreatment processes at Facility A is 62 lbs/million tons ore, not accounting for variability. Applying the UPL formula discussed earlier to account for variability based on the emission test runs for all affected process units at the best performing ore pretreatment affected source (Facility A), we calculated the 99th percentile of performance, which results in a new source MACT level of 163 lb/million tons of ore for ore pre-treatment processes.

Table 3 shows that Facility M has the lowest emission rate for carbon processes and is therefore considered the "best controlled similar source" for such processes. As previously mentioned, all carbon process units at Facility M are well controlled with carbon absorbers. The emission rate for carbon processes at Facility M is 0.06 lb/ton of concentrate. After applying the UPL formula as described above to account for variability, the new source floor for carbon processes based on the 99th percentile of performance is 0.14 lb/ton of concentrate.

For carbon processes at new sources, we are proposing a compliance alternative to provide flexibility in determining compliance because of the wide variety of process combinations and variations in input material that

may be present at future new carbon process sources. A well-established and conventional metric for expressing the degree of emission control is the percent control of the target pollutant. As mentioned above, Facility M is considered the "best controlled similar source" for carbon processes. Test data were available for 2007 for Facility M when the processes were uncontrolled, for 2008 when the controls were newly installed, and from 2009 after over one year of operation. The test results showed a 99.6 percent mercury emission reduction in 2008 and 93.5 percent reduction in 2009. Based on these results and considering variability over time, we are proposing a compliance alternative of 97 percent reduction in mercury emissions for new carbon processes. This compliance alternative was calculated based on the average reduction achieved by the best performing source in 2008 and 2009.

Table 4 shows that Facility K has the lowest emission rate for non-carbon concentrate processes and is therefore considered the "best controlled similar source" for such processes. The emission rate for non-carbon concentrate processes at Facility K is 0.07 lb/ton of concentrate (not accounting for variability). Again applying the UPL formula as described above to account for variability, the new source floor for non-carbon concentrate processes based on the 99th percentile of performance is 0.20 lb/ton of concentrate.

3. Beyond the Floor Determination

To evaluate opportunities for emission reductions beyond those provided by the MACT floor, we typically identify control techniques that have the ability to achieve an emissions limit more stringent than the MACT floor. As mentioned above, the facilities with ore pretreatment processes would have installed mercury scrubbers and venturi scrubbers on their roasters and autoclaves, respectively, to achieve the MACT floor for ore pretreatment processes. To achieve further reductions in mercury beyond what can be achieved using mercury scrubbers and venturi scrubbers, we identified as a beyond-the-floor option the installation of both a refrigeration unit (or condenser) and a carbon adsorber on autoclaves. This additional control system would follow the existing venturi scrubbers to further reduce mercury emission from autoclaves. Because the exhaust is saturated with water, a refrigeration unit or condenser would be needed to remove water that would otherwise adversely affect the adsorptive capacity of the carbon adsorber. With this additional control system, all facilities with ore pretreatment processes could achieve an average performance of 90 lb/million tons of ore or less. This is lower than the average emission rate of 99 lbs/million tons ore for ore pretreatment processes from the top five facilities performing these processes.

In determining whether to control emissions "beyond-the-floor," we must consider the costs, non-air quality health and environmental impacts, and energy requirements of such more stringent control. *See* CAA Section 112(d)(2). We estimate that the capital cost for the additional controls on the autoclaves would be $890,000 with a total annualized cost of $720,000/yr. Mercury emissions would be reduced by 543 lbs, resulting in an estimated cost effectiveness of $1,300/lb. Energy consumption would increase by about 730 megawatt-hours per year, primarily due to the refrigeration unit. Solid waste generation and disposal (spent carbon loaded with mercury) would increase by about 3 tons per year. (*See* Section VI.A for additional discussion of our consideration of emissions, cost, and non-air impacts in developing MACT standards for this source category.) After considering the costs and the above-mentioned impacts associated with the use of a refrigeration unit (or condenser) and a carbon adsorber on autoclaves, we believe that the emission reduction that can be achieved with this additional control system is justified under section 112(d) of the CAA. Applying the UPL formula discussed earlier to account for variability, the 99th percent UPL would be 149 lb/million tons of ore. We therefore propose that the beyond-the-floor performance level of 149 lb/million tons of ore is MACT for new and existing ore pretreatment processes.

For the carbon processes, we estimate that 9 of the 11 facilities for which we have data will need to improve control to meet the floor limits because these 9 plants have an average emission control performance that is above the MACT floor average performance. There are a few facilities in the middle of the rankings that will probably only need marginal improvements, but several facilities (especially those at the bottom of the ranking that average several times the floor average) will need significant improvements in mercury emission control. We estimate that the MACT floor limit for the carbon processes will reduce emissions by about 1,100 lbs per year, a reduction of 89 percent from current levels. Our estimates of impacts for the MACT floor indicate that most of the carbon processes currently have or will have carbon adsorbers installed to effectively control mercury emissions at the MACT floor level. Considering the very low mercury concentrations when the carbon processes are performing at the MACT level of control, it is difficult to identify a technology that can obtain efficient additional percent reductions from low concentration streams. For a beyond-the-floor analysis, we assumed that theoretically a second carbon adsorption system could be installed in series with the first one and would get an additional 90 percent reduction from the very low mercury concentrations that result from the MACT floor level of control. We acknowledge that there is uncertainty as to the additional percent reduction the second control system might achieve. Nevertheless, we estimate that the emission reduction would only be 12 lbs per year. The capital cost was estimated as $3.2 million with a total annualized cost of about $1.2 million/yr and a cost effectiveness of $100,000/lb. Considering the significant cost and the small additional reduction in emissions associated with a second carbon adsorption system and the uncertainty that even that small reduction might be achieved, we believe that the additional emission reduction from this beyond-the-floor control option is not warranted under section 112(d).

For the non-carbon concentrate processes, we expect that Facility L would probably need to add a carbon adsorber to its melt furnace to achieve the MACT floor level of control. For beyond the floor, we again assumed that the existing carbon adsorbers would be supplemented by adding a second control system of carbon adsorbers in series for all of the melt furnaces. We estimated the capital cost for the second set of control systems as $0.7 million and a total annualized cost of $306,000/year. Emissions would be reduced by 7 lb/year, which results in a cost effectiveness of $44,000/lb. Considering the very small emission reduction from a second carbon adsorber system, and its high capital and operating costs, we believe that the emission reduction associated with this additional control system is not warranted under section 112(d) of the CAA.

C. How did we select the testing, monitoring and electronic reporting requirements?

We are proposing testing and monitoring requirements to assure compliance with the emission standards set forth in this proposed rule. These compliance assurance provisions are based, in part, on requirements that have been applied to this source category in State operating permits, EPA

requirements applied to other industries that emit mercury, and an understanding of how control devices and processes perform and can be effectively monitored.

We are proposing initial compliance stack tests for mercury (using Method 29) within the first 180 days of the compliance date and annual compliance tests thereafter for all thermal process units to determine compliance with the proposed emission limits. The testing frequency and procedures would be essentially the same as the NDEP requirements for the facilities that are located in Nevada partly because the stack test data that we used to develop the proposed emission limits were based on the test methods applied in Nevada. To provide additional flexibility, we propose to allow the use of the Ontario Hydro Method, Method 30A, or Method 30B as alternatives to EPA Method 29.

We also propose the following monitoring requirements to assure compliance with the proposed MACT standards.

Roasters. In addition to the annual stack test, we are proposing two options for monitoring roaster emissions: (1) Integrated sorbent trap mercury monitoring coupled with parametric monitoring of scrubbers and (2) monitoring using a continuous emission monitoring system (CEMS) for mercury. Both proposed monitoring options would require establishment of operating limits to detect and correct problems as soon as possible. An exceedance of an operating limit for the sorbent trap or CEMS monitoring would trigger immediate corrective action and would require that the problem be corrected within 48 hours or that the feed of ore to the roaster be stopped.

As part of this first monitoring option (*i.e.,* sorbent trap monitoring), we are also proposing that facilities with roasters and mercury scrubbers establish operating limits for various parameters during their compliance test (*i.e.,* the annual stack test for mercury emissions). The proposed parametric monitoring provides additional compliance assurance by ensuring that the process and control devices are operating properly. The proposed parameters for monitoring mercury scrubbers are similar to those currently required to be monitored in the title V operating permits issued by NDEP for roasters. We are proposing that each mercury scrubber be equipped with devices to monitor the scrubber liquor flow rate, scrubber pressure drop, and inlet gas temperature. Minimum operating limits for the scrubber liquor flow rate and pressure drop would be established based on the lowest average value measured during any of the three runs of a compliant performance test. A maximum inlet temperature would be established based on the highest temperature measured during any of the three runs of the compliance test. In addition to the parameters described above, we are proposing that the facility would also monitor the mercuric ion concentration and the chloride ion concentration four times per day or continuously monitor the oxidation reduction potential and pH. These monitored parameters would be maintained within the range specified by the scrubber's manufacturer or within an alternative range approved by the permitting authority. If any of the parameters are outside the specified range or limit, corrective action would be taken to bring the parameters back within the operating range or the facility would commence shutdown of the roaster.

As mentioned above, we are including a mercury CEMS as an alternative for monitoring of mercury emissions from roasters. This monitoring option would not require parametric monitoring of the mercury scrubbers. Mercury CEMS have been applied at other industrial sources that emit mercury, such as coal-fired power plants and cement production plants, and these devices yield valuable information regarding continuous emissions performance. We realize that mercury CEMs have not yet been demonstrated on roasters at gold production facilities and that there are currently no calibration standards traceable to NIST within the range of mercury concentrations from roasters. However, calibration standards are available from the manufacturers of mercury CEMS. Based on the Agency's understanding and experience relative to continuous mercury monitoring at other industrial facilities, such as coal-fired power plants and cement plants, as well as research experience, EPA believes that the CEMS can be adequately calibrated with manufacturers' standards and be used as a valuable tool to monitor roasting operations to detect deviations in performance. We therefore believe that it is appropriate to propose the use of mercury CEMS as a monitoring option for roasters. However, we believe that it is appropriate to also propose an alternative monitoring approach based on frequent (weekly) monitoring using a sorbent trap method.

We request comments on the viability of using mercury CEMs, specifically for monitoring mercury emissions from roasters at gold ore processing and production facilities. We request comments on calibration methods, costs, reliability and other aspects of the CEMs. We also request similar comments on the sorbent trap method.

For facilities that control roaster mercury emissions with mercury scrubbers, we are proposing that if a facility demonstrates, in accordance with the demonstration requirements in the proposed rule, that mercury emissions from the roaster are less than 10 pounds of mercury per million tons of input ore, they can cease monitoring via either the sorbent trap or the mercury CEMS. Such a facility would be required to conduct the parametric monitoring for mercury scrubbers as described above (under option one) and maintain parameters within the operating ranges established in accordance with the proposed rule. Also, the facility would continue to perform annual compliance tests of the roaster stack to demonstrate emissions continue to be less than 10 pounds of mercury per million tons of input ore. We believe that for roasters that are effectively controlled with mercury scrubbers (*i.e.,* emitting less than 10 pounds per million tons of ore during normal operations), parametric monitoring of the scrubbers would be sufficient. This monitoring option provides additional incentive for facilities to reduce emissions from roasters. However, if any subsequent compliance tests indicate that the roaster is emitting more than 10 pounds of mercury per million tons of ore input, then the facility would be required to monitor the roaster emissions using a sorbent trap method or CEMS.

We are specifically requesting comments on the advantages and disadvantages of the two options for monitoring emissions from roasters along with any supporting data and documentation to support one or both of the options. We are also requesting comment on the proposed daily averaging time when using the mercury CEMS option and the frequency of sampling when using the sorbent trap option. In addition, we are requesting comments on the proposed monitoring approach for low-emitting roasters with mercury scrubbers, as described in the paragraph above, and possible alternatives to this approach. Moreover, we are requesting comments on the parametric monitoring methods.

Carbon Adsorbers. For process units (such as furnaces, kilns, retorts, electrowinning, and autoclaves) that control mercury emissions with a carbon adsorber, we are proposing three options. One option involves monitoring the mercury concentration at the exit of the carbon bed. A second

option, adopted from requirements in some NDEP permits, is based on sampling the carbon bed for mercury. The third option is based on changing out the carbon bed after a fixed period of time determined based on historical operating experience.

We believe that all three options could provide reasonable assurance that the carbon adsorber is operating properly on a continuing basis and that the carbon is replaced before breakthrough occurs. Our current preference among the three proposed monitoring options for carbon beds described above is the option of sampling the exit gas from the carbon bed using EPA Method 30B along with continuous temperature monitoring because this option provides a direct measurement of the amount of mercury exiting the control device. We are specifically requesting comments on the advantages and disadvantages of the three options along with any supporting data and documentation. Based on public comments, we intend to promulgate one or more of these options or a modified version as necessary.

We are also proposing that the inlet stream to carbon adsorbers applied to autoclaves, carbon kilns, melt furnaces, and retorts be monitored for temperature and that the inlet temperature be maintained below the maximum temperature established during the compliance tests. We believe the temperature monitoring is needed to detect any excursions in mercury emissions caused by excessively high temperatures. We are also considering a reduction in frequency of the sampling and analysis based on historical data on the life of a new carbon bed (*e.g.,* quarterly sampling when the carbon bed is fresh and monthly sampling after a specified period of time) and for processes that are very small sources of mercury emissions. We are requesting comments and supporting data on these options and others that may be appropriate for monitoring carbon beds.

Wet scrubbers. For each wet scrubber, we are proposing that pressure drop and water flow rate be maintained at a minimum level based on measurements during the initial or subsequent compliance test(s). These parameters are the typical monitoring parameters required by other MACT standards and by State operating permits for wet scrubbers at gold mine ore processing and production facilities. Monitoring these parameters ensures that wet scrubbers are operating properly.

Electronic reporting. The EPA must have performance test data to conduct effective reviews of CAA Section 112 and 129 standards, as well as for many other purposes including compliance determinations, emissions factor development, and annual emissions rate determinations. In conducting these required reviews, we have found it ineffective and time consuming not only for us but also for other regulatory agencies and source owners and operators to locate, collect, and submit emissions test data because of varied locations for data storage and varied data storage methods. One improvement that has occurred in recent years is the availability of stack test reports in electronic format as a replacement for cumbersome paper copies.

In this action, we are taking a step to improve data accessibility. Owners and operators of affected facilities would be required to submit to an EPA electronic database an electronic copy of reports of certain performance tests required under this rule. Data entry would be through an electronic emissions test report structure called the Electronic Reporting Tool (ERT) that will be used by the staff as part of the emissions testing project. The ERT was developed with input from stack testing companies who generally collect and compile performance test data electronically and offices within State and local agencies which perform field test assessments. The ERT is currently available, and access to direct data submittal to EPA's electronic emissions database (WebFIRE) will become available by December 31, 2011.

The requirement to submit source test data electronically to EPA would not require any additional performance testing and would apply to those performance tests conducted using test methods that are supported by ERT. The ERT contains a specific electronic data entry form for most of the commonly used EPA reference methods. The Web site listed below contains a listing of the pollutants and test methods supported by ERT. In addition, when a facility submits performance test data to WebFIRE, there would be no additional requirements for emissions test data compilation. Moreover, we believe industry would benefit from development of improved emissions factors, fewer follow-up information requests, and better regulation development as discussed below. The information to be reported is already required for the existing test methods and is necessary to evaluate the conformance to the test method.

One major advantage of submitting source test data through the ERT is that it provides a standardized method to compile and store much of the documentation required to be reported by this rule while clearly stating what testing information we require. Another important benefit of submitting these data to EPA at the time the source test is conducted is that it will substantially reduce the effort involved in data collection activities in the future. Specifically, because EPA would already have adequate source category data to conduct residual risk assessments or technology reviews, there would likely be fewer or less substantial data collection requests (*e.g.,* CAA Section 114 letters). This results in a reduced burden on both affected facilities (in terms of reduced manpower to respond to data collection requests) and EPA (in terms of preparing and distributing data collection requests).

State/local/Tribal agencies may also benefit in that their review may be more streamlined and accurate as the States will not have to re-enter the data to assess the calculations and verify the data entry. Finally, another benefit of submitting these data to WebFIRE electronically is that these data will improve greatly the overall quality of the existing and new emissions factors by supplementing the pool of emissions test data upon which the emissions factor is based and by ensuring that data are more representative of current industry operational procedures. A common complaint we hear from industry and regulators is that emissions factors are outdated or not representative of a particular source category. Receiving and incorporating data for most performance tests will ensure that emissions factors, when updated, represent accurately the most current operational practices. In summary, receiving test data already collected for other purposes and using them in the emissions factors development program will save industry, State/local/Tribal agencies, and EPA time and money and work to improve the quality of emissions inventories and related regulatory decisions.

As mentioned earlier, the electronic data base that will be used is EPA's WebFIRE, which is a Web site accessible through EPA's Technology Transfer Network (TTN). The WebFIRE Web site was constructed to store emissions test data for use in developing emissions factors. A description of the WebFIRE data base can be found at *http://cfpub.epa.gov/oarweb/index.cfm?action=fire.main.*

The ERT will be able to transmit the electronic report through EPA's Central Data Exchange (CDX) network for storage in the WebFIRE data base. Although ERT is not the only electronic interface that can be used to submit source test data to the CDX for entry

into WebFIRE, it makes submittal of data very straightforward and easy. A description of the ERT can be found at *http://www.epa.gov/ttn/chief/ert/ert_tool.html.*

VI. Impacts of the Proposed Standards

A. What are the emissions, cost, economic, and non-air environmental impacts?

We estimate the proposed MACT standard will reduce mercury emissions from gold mine ore processing and production by 1,650 lb/year from current emissions levels down to a level of 1,390 lb/year post-MACT. The annual emissions expected after MACT (of 1,390 lbs) represent a 73 percent reduction from 2007 emissions (5,000 pounds), more than 90 percent reduction from the emissions level in 2001 (about 23,000 pounds), and more than 96 percent reduction from uncontrolled emissions levels (more than 37,000 pounds). The capital cost of emission controls is estimated as $5 million with a total annualized cost of $2.3 million per year. The capital costs for monitoring, reporting, and recordkeeping are estimated as $1.0 to $1.3 million with a total annualized cost of $0.8 to $1.5 million per year, depending on the monitoring option that is chosen. The cost of compliance is estimated to be less than 0.3 percent of sales. We therefore believe that the economic impact on an affected company would be insignificant. Electricity consumption is expected to increase by about 2,100 megawatt-hours per year due to increased fan capacity for carbon adsorbers and the installation of refrigeration units or condensers on a few process units. Non-hazardous solid waste (spent carbon containing mercury that must be regenerated or disposed of) would increase by about 7 tons per year.

B. What are the health benefits of reducing mercury emissions?

Mercury is emitted to the air from various man-made and natural sources. These emissions transport through the atmosphere and eventually deposit to land or water bodies. This deposition can occur locally, regionally, or globally, depending on the form of mercury emitted and other factors such as the weather. The form of mercury emitted varies depending on source type and other factors. Available data indicate that the majority of air emissions from gold mine ore processing and production facilities are in the form of gaseous elemental mercury. This form of mercury can be transported very long distances, even globally, to regions far from the emissions source (becoming part of the global "pool") before deposition occurs. However, this source category also emits some gaseous inorganic ionic mercury forms (such as mercuric chloride), and smaller amounts of particulate bound mercury. These forms have a shorter atmospheric lifetime and can deposit to land or water bodies closer to the emissions source. Furthermore, elemental mercury in the atmosphere can undergo transformation into ionic mercury, providing a significant pathway for deposition of emitted elemental mercury.

As mentioned previously, the gold mine ore processing and production source category emitted about 2.5 tons of mercury to the air in 2007 in the U.S. Based on the EPA's National Emission Inventory, about 103 tons of mercury were emitted from all anthropogenic sources in the U.S. in 2005. Moreover, the United Nations has estimated that about 2100 tons were emitted worldwide by anthropogenic sources in 2005.[3] We believe that total mercury emissions in the U.S. and globally in 2007 were about the same magnitude as in 2005. Therefore, we estimate that in 2007 the gold mine ore processing and production source category emitted about 2.5 percent of the total anthropogenic mercury emissions in the U.S. and about 0.12 percent of the global emissions.

Potential exposure routes to mercury emissions include both direct inhalation, and consumption of fish containing methylmercury. The primary route of human exposure to mercury emissions from industrial sources is generally indirectly through the consumption of fish containing methylmercury. As described above, mercury that has been emitted to the air eventually settles into water bodies or onto land where it can either move directly or be leached into water bodies. Once deposited, certain microorganisms can change it into methylmercury, a highly toxic form that builds up in fish, shellfish and animals that eat fish. Consumption of fish and shellfish are the main sources of methylmercury exposure to humans. Methylmercury builds up more in some types of fish and shellfish than others. The levels of methylmercury in fish and shellfish vary widely depending on what they eat, how long they live and how high they are in the food chain. Most fish, including ocean species and local freshwater fish, contain some methylmercury. For example, in recent studies by EPA and the United States Geological Survey (USGS) of fish tissues, every fish sampled contained some methylmercury.[4, 5]

Research shows that most people's fish consumption does not cause a mercury-related health concern. However, certain sub-populations may be at higher risk because of their routinely high consumption of fish (*e.g.,* Tribal and other subsistence fishers and their families who rely heavily on fish for a substantial part of their diet). It has been demonstrated that high levels of methylmercury in the bloodstreams of unborn babies and young children may harm the developing nervous system, making the child less able to think and learn. Moreover, mercury exposure at high levels can harm the brain, heart, kidneys, lungs, and immune system of people of all ages.[6]

The majority of the fish consumed in the U.S. are ocean species. The methylmercury concentrations in ocean fish species are primarily influenced by the global mercury pool. However, the methylmercury found in local fish can be due, at least partly, to mercury emissions from local sources.

Overall, this regulation will reduce mercury emissions from the gold ore processing and production source category by about 1,650 pounds per year from current levels and, therefore, contribute to reductions in mercury exposures and health effects.

VII. Statutory and Executive Order Reviews

A. Executive Order 12866: Regulatory Planning and Review

This action is a "significant regulatory action" under the terms of Executive Order 12866 (58 FR 51735, October 4, 1993) because it may raise novel legal or policy issues. Accordingly, EPA submitted this action to the Office of Management and Budget (OMB) for review under Executive Order 12866, and any changes made in response to OMB recommendations have been

[3] United Nations Environment Programme/Arctic Monitoring and Assessment Program (UNEP/AMAP). *Study on mercury-emitting sources, including emissions trends and cost and effectiveness of alternative control measures: "UNEP Paragraph 29 study."* 2008. Available at: *http://www.chem.unep.ch/mercury/Paragraph29/Zero%20Draft%20Report%20March%208.doc.*

[4] *The National Study of Chemical Residues in Lake Fish Tissue.* U.S. Environmental Protection Agency Office of Water Office of Science and Technology September 2009. Available at: *http://www.epa.gov/waterscience/fish/study/index.htm.*

[5] Scudder, B., L. Chasar, D. Wentz, N. Bauch, M. Brigham, P. Moran, and D. Krabbenhoft. (United States Geological Survey). *Mercury in Fish, Bed Sediment, and Water from Streams Across the United States, 1998–2005.* 2009. Available at: *http://pubs.usgs.gov/sir/2009/5109/.*

[6] For more information *see http://www.epa.gov/mercury/about.htm.*

documented in the docket for this action.

B. Paperwork Reduction Act

The information collection requirements in this proposed rule have been submitted for approval to OMB under the Paperwork Reduction Act, 44 U.S.C. 3501 *et seq.* The Information Collection Request (ICR) document prepared by EPA has been assigned EPA ICR No. 2383.01.

The recordkeeping and reporting requirements in this proposed rule are based, in large part, on the information collection requirements in EPA's NESHAP General Provisions (40 CFR part 63, subpart A). The recordkeeping and reporting requirements in the General Provisions are specifically authorized by section 114 of the CAA (42 U.S.C. 7414). All information other than emissions data submitted to EPA pursuant to the information collection requirements for which a claim of confidentiality is made is safeguarded according to CAA section 114(c) and EPA's implementing regulations at 40 CFR part 2, subpart B.

This proposed NESHAP would require applicable one-time notifications according to the NESHAP General Provisions. In addition, owners or operators must submit annual notifications of compliance status and report any deviations in each semiannual reporting period. Records of all performance tests, measurements of feed input rates, monitoring data, and corrective actions would be required.

The average annual burden for this information collection averaged over the first 3 years of this ICR is estimated to total 4,225 labor hours per year at a cost of approximately $213,726 per year for the 21 facilities that would be subject to this proposed rule, or approximately 201 hours per year per facility. Capital costs are estimated as $1.3 million, operation and maintenance costs are estimated as $65,000 per year, and total annualized cost (including capital recovery) is estimated as $256,000 per year for this proposed rule's information collection requirements. No costs or burden hours are estimated for new sources because none is projected for the next 3 years. Burden is defined at 5 CFR 1320.3(b).

An agency may not conduct or sponsor, and a person is not required to respond to, a collection of information unless the collection displays a currently valid OMB control number. The OMB control numbers for EPA's regulations in 40 CFR part 63 are listed in 40 CFR part 9.

To comment on the Agency's need for this information, the accuracy of the provided burden estimates, and any suggested methods for minimizing respondent burden, EPA has established a public docket for this rule, which includes this ICR, under Docket ID number EPA–HQ–OAR–2010–0239.

Submit any comments related to the ICR to EPA and OMB. *See* **ADDRESSES** section at the beginning of this notice for where to submit comments to EPA. Send comments to OMB at the Office of Information and Regulatory Affairs, Office of Management and Budget, 725 17th Street, NW., Washington, DC 20503, Attention: Desk Office for EPA. Since OMB is required to make a decision concerning the ICR between 30 and 60 days after April 28, 2010, a comment to OMB is best assured of having its full effect if OMB receives it by May 28, 2010. The final rule will respond to any OMB or public comments on the information collection requirements contained in this proposal.

C. Regulatory Flexibility Act

The Regulatory Flexibility Act generally requires an agency to prepare a regulatory flexibility analysis of any rule subject to notice and comment rulemaking requirements under the Administrative Procedure Act or any other statute unless the agency certifies that this rule would not have a significant economic impact on a substantial number of small entities. Small entities include small businesses, small not-for-profit enterprises, and small governmental jurisdictions.

For the purposes of assessing the impacts of this proposed NESHAP on small entities, a small entity is defined as: (1) A small business whose parent company meets the Small Business Administration size standards for small businesses found at 13 CFR 121.201 (less than 500 employees for gold mine ore processing and production facilities—NAICS 212221); (2) a small governmental jurisdiction that is a government of a city, county, town, school district, or special district with a population of less than 50,000; and (3) a small organization that is any not-for-profit enterprise that is independently owned and operated and is not dominant in its field.

After considering the economic impacts of this proposed rule on small entities, I certify that this action will not have a significant economic impact on a substantial number of small entities. This proposed rule is estimated to impact about 21 gold mine ore processing and production facilities, none of which are owned by small entities. Thus, there are no impacts to small entities from this proposed rule. Although this proposed rule will contain requirements for new sources, EPA expects few, if any, new sources to be constructed in the next several years. Therefore, EPA did not estimate the impacts for new affected sources for this proposed rule.

Although this proposed rule will not have a significant economic impact on a substantial number of small entities, EPA nonetheless has tried to reduce the impact of this proposed rule on small and large entities. These standards establish emission limits that reflect practices and controls that are used throughout the industry and in many cases are already required by State operating permits. These standards also require only the essential monitoring, recordkeeping, and reporting needed to verify compliance. These proposed standards were developed based on information obtained from industry representatives in our surveys, consultation with business representatives and their trade association and other stakeholders. We continue to be interested in the potential impacts of this proposed rule on small entities and welcome comments on issues related to such impacts.

D. Unfunded Mandates Reform Act

This proposed rule does not contain a Federal mandate that may result in expenditures of $100 million or more for State, local, and Tribal governments, in the aggregate, or to the private sector in any one year. This proposed rule is not expected to impact State, local, or Tribal governments. The nationwide annualized cost of this proposed rule for affected industrial sources is $3.8 million/yr. Thus, this proposed rule is not subject to the requirements of sections 202 and 205 of the Unfunded Mandates Reform Act (UMRA).

This proposed rule is also not subject to the requirements of section 203 of UMRA because it contains no regulatory requirements that might significantly or uniquely affect small governments. This proposed rule will not apply to such governments and will not impose any obligations upon them.

E. Executive Order 13132: Federalism

This action does not have federalism implications. It will not have substantial direct effects on the States, on the relationship between the national government and the States, or on the distribution of power and responsibilities among the various levels of government, as specified in Executive Order 13132. This proposed rule does not impose any requirements on State and local governments. Thus,

Executive Order 13132 does not apply to this action.

In the spirit of Executive Order 13132, and consistent with EPA policy to promote communications between EPA and State and local governments, EPA specifically solicits comment on this proposed action from State and local officials.

F. Executive Order 13175: Consultation and Coordination With Indian Tribal Governments

This action does not have Tribal implications, as specified in Executive Order 13175 (65 FR 67249, November 9, 2000). This proposed rule imposes no requirements on Tribal governments; thus, Executive Order 13175 does not apply to this action. EPA specifically solicits additional comment on this proposed action from Tribal officials.

G. Executive Order 13045: Protection of Children From Environmental Health and Safety Risks

EPA interprets Executive Order 13045 (62 FR 19885, April 22, 1997) as applying only to those regulatory actions that are based on health or safety risks, such that the analysis required under section 5–501 of the Executive Order has the potential to influence the regulation. This action is not subject to Executive Order 13045 because it is based solely on technology performance.

H. Executive Order 13211: Actions Concerning Regulations That Significantly Affect Energy Supply, Distribution, or Use

This action is not a "significant energy action" as defined in Executive Order 13211 (66 FR 28355, May 22, 2001) because it is not likely to have a significant adverse effect on the supply, distribution, or use of energy. We have concluded that this proposed rule will not likely have any significant adverse energy effects because energy consumption would increase by only 2,100 megawatt-hours per year.

I. National Technology Transfer and Advancement Act

Section 12(d) of the National Technology Transfer and Advancement Act of 1995 ("NTTAA"), Public Law 104–113 (15 U.S.C. 272 note), directs EPA to use voluntary consensus standards (VCS) in its regulatory activities unless to do so would be inconsistent with applicable law or otherwise impractical. VCS are technical standards (*e.g.,* materials specifications, test methods, sampling procedures, business practices) that are developed or adopted by voluntary consensus standards bodies. NTTAA directs EPA to provide Congress, through OMB, explanations when the Agency decides not to use available and applicable VCS.

This proposed rulemaking involves technical standards. EPA proposes to use ASME PTC 19.10–1981, "Flue and Exhaust Gas Analyses," for its manual methods of measuring the oxygen or carbon dioxide content of the exhaust gas. These parts of ASME PTC 19.10–1981 are acceptable alternatives to EPA Method 3B. This standard is available from the American Society of Mechanical Engineers (ASME), Three Park Avenue, New York, NY 10016–5990.

Another VCS, ASTM D6784–02, "Standard Test Method for Elemental, Oxidized, Particle-Bound and Total Mercury in Flue Gas Generated From Coal-Fired Stationary Sources (Ontario Hydro Method)" is an acceptable alternative to EPA Method 29. This performance test method is available from ASTM International. *See http://www.astm.org/.*

EPA has also decided to use EPA Methods 1, 1A, 2, 2A, 2C, 2D, 2F, 2G, 3, 3A, 3B, 4, 29, 30A, 30B, Method 7471A, "Mercury in Solid or Semisolid Waste (Manual Cold-Vapor Technique)," and ASTM D6784–02, "Standard Test Method for Elemental, Oxidized, Particle-Bound and Total Mercury in Flue Gas Generated From Coal-Fired Stationary Sources," (incorporated by reference—*see* 63.14). Although the Agency has identified 14 VCS as being potentially applicable to these methods cited in this rule, we have decided not to use these standards in this proposed rulemaking. The use of these VCS would have been impractical because they do not meet the objectives of the standards cited in this rule. The search and review results are in the docket for this proposed rule.

EPA welcomes comments on this aspect of this proposed rulemaking and, specifically, invites the public to identify potentially applicable voluntary consensus standards and to explain why such standards should be used in this regulation.

Under section 63.7(f) and section 63.8(f) of Subpart A of the General Provisions, a source may apply to EPA for permission to use alternative test methods or alternative monitoring requirements in place of any required testing methods, performance specifications, or procedures in the proposed rule.

J. Executive Order 12898: Federal Actions To Address Environmental Justice in Minority Populations and Low-Income Populations

Executive Order 12898 (59 FR 7629, February 16, 1994) establishes Federal executive policy on environmental justice. Its main provision directs Federal agencies, to the greatest extent practicable and permitted by law, to make environmental justice part of their mission by identifying and addressing, as appropriate, disproportionately high and adverse human health or environmental effects of their programs, policies, and activities on minority populations and low-income populations in the United States.

EPA has determined that this proposed rule will not have disproportionately high and adverse human health or environmental effects on minority or low-income populations because it will increase the level of environmental protection for all affected populations without having any disproportionately high and adverse human health or environmental effects on any population, including any minority or low-income population. This proposed rule is expected to reduce mercury emissions from gold mine ore processing and production facilities and thus decrease the amount of such emissions to which all affected populations are exposed.

List of Subjects in 40 CFR Parts 9 and 63

Environmental protection, Air pollution control, Hazardous substances, Incorporations by reference, Reporting and recordkeeping requirements.

Dated: April 15, 2010.

Lisa P. Jackson,

Administrator.

For the reasons stated in the preamble, title 40, chapter I, of the Code of Federal Regulations is proposed to be amended as follows:

PART 9—[AMENDED]

1. The authority citation for part 9 continues to read as follows:

Authority: 7 U.S.C. 135, *et seq.,* 136–136y; 15 U.S.C. 2001, 2003, 2005, 2006, 2601–2671; 21 U.S.C. 331j, 346a, 348; 31 U.S.C. 9701; 33 U.S.C. 1251, *et seq.,* 1311, 1313d, 1314, 1318, 1321, 1326, 1330, 1342, 1344, 1345(d) and (e), 1361; E.O. 11735, 38 FR 21243, 3 CFR, 1971–1975 Comp. p. 973; 42 U.S.C. 241, 242b, 243, 246, 300f, 300g, 300g–1, 300g–2, 300g–3, 300g–4, 300g–5, 300g–6, 300j–1, 300j–2, 300j–3, 300j–4, 300j–9, 1857, *et seq.,* 6901–6992k, 7401–7671q, 7542, 9601–9657, 11023, 11048.

Subpart A—[Amended]

* * * * *

2. The table in § 9.1 is amended by adding an entry in numerical order for "63.11647–63.11648" under the heading "National Emission Standards for Hazardous Air Pollutants for Source Categories" to read as follows:

§ 9.1 OMB Approvals under the Paperwork Reduction Act.

* * * * *

40 CFR citation	OMB control No.
* * * * * * *	
National Emission Standards for Hazardous Air Pollutants for Source Categories[3]	
* * * * * * *	
63.11647–63.11648	2060–NEW
* * * * * * *	

* * * * * * *

[3] The ICRs referenced in this section of the table encompass the applicable general provisions contained in 40 CFR part 63, subpart A, which are not independent information collection requirements.

* * * * *

PART 63—[AMENDED]

3. The authority citation for part 63 continues to read as follows:

Authority: 42 U.S.C. 7401 *et seq.*

Subpart A—[Amended]

4. Section 63.14 is amended by revising paragraphs (b)(35) and (i)(1) and by adding paragraph (k)(1)(v) to read as follows:

§ 63.14 Incorporations by reference.

* * * * *

(b) * * *

(35) ASTM D6784–02, Standard Test Method for Elemental, Oxidized, Particle-Bound and Total Mercury in Flue Gas Generated from Coal-Fired Stationary Sources (Ontario Hydro Method), IBR approved for § 63.11646(a)(1)(v) and table 5 to subpart DDDDD of this part.

* * * * *

(i) * * *

(1) ANSI/ASME PTC 19.10–1981, "Flue and Exhaust Gas Analyses [Part 10, Instruments and Apparatus]," IBR approved for §§ 63.309(k)(1)(iii), 63.865(b), 63.3166(a)(3), 63.3360(e)(1)(iii), 63.3545(a)(3), 63.3555(a)(3), 63.4166(a)(3), 63.4362(a)(3), 63.4766(a)(3), 63.4965(a)(3), 63.5160(d)(1)(iii), 63.9307(c)(2), 63.9323(a)(3), 63.11148(e)(3)(iii), 63.11155(e)(3), 63.11162(f)(3)(iii) and (f)(4), 63.11163(g)(1)(iii) and (g)(2), 63.11410(j)(1)(iii), 63.11551(a)(2)(i)(C), 63.11646(a)(1)(iii), table 5 to subpart DDDDD of this part, and table 1 to subpart ZZZZZ of this part.

* * * * *

(k) * * *

(1) * * *

(v) Method 7471A, "Mercury in Solid or Semisolid Waste (Manual Cold-Vapor Technique)," IBR approved for § 63.11647(f)(2).

* * * * *

5. Part 63 is amended by adding subpart EEEEEEE to read as follows:

Subpart EEEEEEE—National Emission Standards for Hazardous Air Pollutants: Gold Mine Ore Processing and Production Area Source Category

Applicability and Compliance Dates

Sec.

63.11640 Am I subject to this subpart?
63.11641 What are my compliance dates?

Standards and Compliance Requirements

63.11645 What are my mercury emission standards?
63.11646 What are my compliance requirements?
63.11647 What are my monitoring requirements?
63.11648 What are my notification, reporting, and recordkeeping requirements?

Other Requirements and Information

63.11650 What General Provisions apply to this subpart?
63.11651 What definitions apply to this subpart?
63.11652 Who implements and enforces this subpart?
63.11653 [Reserved]

Tables to Subpart EEEEEEE of Part 63

Table 1 to Subpart EEEEEEE of Part 63—Applicability of General Provisions to Subpart EEEEEEE

Subpart EEEEEEE—National Emission Standards for Hazardous Air Pollutants: Gold Mine Ore Processing and Production Area Source Category

Applicability and Compliance Dates

§ 63.11640 Am I subject to this subpart?

(a) You are subject to this subpart if you own or operate a gold mine ore processing and production facility as defined in § 63.11651, that is an area source.

(b) This subpart applies to each new or existing affected source. The affected sources are each collection of "ore pretreatment processes" at a gold mine ore processing and production facility, each collection of "carbon processes" at a gold mine ore processing and production facility, and each collection of "non-carbon concentrate processes" at a gold mine ore processing and production facility, as defined in § 63.11651.

(1) An affected source is existing if you commenced construction or reconstruction of the affected source on or before April 28, 2010.

(2) An affected source is new if you commenced construction or reconstruction of the affected source after April 28, 2010.

(c) This subpart does not apply to research and development facilities, as defined in section 112(c)(7) of the Clean Air Act (CAA).

(d) If you own or operate a source subject to this subpart, you must have or you must obtain a permit under 40 CFR part 70 or 40 CFR part 71.

§ 63.11641 What are my compliance dates?

(a) If you own or operate an existing affected source, you must comply with the applicable provisions of this subpart

no later than 2 years after the date of publication of the final rule in the **Federal Register**.

(b) If you start up a new affected source on or before the date of publication of the final rule in the **Federal Register**, you must comply with the provisions of this subpart no later than the date of publication of the final rule in the **Federal Register**.

(c) If you start up a new affected source after the date of publication of the final rule in the **Federal Register**, you must comply with the provisions of this subpart upon startup of your affected source.

Standards and Compliance Requirements

§ 63.11645 What are my mercury emission standards?

(a) For existing ore pretreatment processes, you must emit no more than 149 pounds of mercury per million tons of ore processed.

(b) For existing carbon processes, you must emit no more than 2.6 pounds of mercury per ton of concentrate processed.

(c) For existing non-carbon concentrate processes, you must emit no more than 0.25 pounds of mercury per ton of concentrate processed.

(d) For new ore pretreatment processes, you must emit no more than 149 pounds of mercury per million tons of ore processed.

(e) For new carbon processes, you must either:

(1) Emit no more than 0.14 pounds of mercury per ton of concentrate processed, or

(2) Achieve a 97-percent reduction in mercury emissions as measured before and after the mercury emission control devices.

(f) For new non-carbon concentrate processes, you must emit no more than 0.2 pounds of mercury per ton of concentrate processed.

(g) The standards set forth in this section apply at all times.

§ 63.11646 What are my compliance requirements?

(a) Except as provided in paragraph (b) of this section, you must conduct a mercury compliance emission test within 180 days of the compliance date for all process units at new and existing affected sources according to the requirements in paragraphs (a)(1) through (13) of this section. This compliance testing must be repeated annually thereafter (*i.e.,* once every four successive calendar quarters).

(1) You must determine the concentration of mercury and the volumetric flow rate of the stack gas according to the following test methods and procedures:

(i) Method 1 or 1A (40 CFR part 60, appendix A–1) to select sampling port locations and the number of traverse points in each stack or duct. Sampling sites must be located at the outlet of the control device (or at the outlet of the emissions source if no control device is present) and prior to any releases to the atmosphere.

(ii) Method 2, 2A, 2C, 2D, 2F (40 CFR part 60, appendix A–1), or Method 2G (40 CFR part 60, appendix A–2) to determine the volumetric flow rate of the stack gas.

(iii) Method 3, 3A, or 3B (40 CFR part 60, appendix A–2) to determine the dry molecular weight of the stack gas. You may use ANSI/ASME PTC 19.10–1981, "Flue and Exhaust Gas Analyses" (incorporated by reference—*see* § 63.14) as an alternative to EPA Method 3B.

(iv) Method 4 (40 CFR part 60, appendix A–3) to determine the moisture content of the stack gas.

(v) Method 29 (40 CFR part 60, appendix A–8), ASTM D6784–02; "Standard Test Method for Elemental, Oxidized, Particle-Bound and Total Mercury in Flue Gas Generated from Coal-Fired Stationary Sources (Ontario Hydro Method)" (incorporated by reference—*see* § 63.14); Method 30A (40 CFR part 60, appendix A–8); or Method 30B (40 CFR part 60, appendix A–8) to determine the concentration of mercury. If you use Method 29, the acetone rinse procedures in Section 8.2.6 of the method must be followed and are not optional (*i.e.,* quantitative removal of particulate matter and any condensate from the sampling apparatus (probe nozzle, fitting, holder) and front half of the filter holder must be performed using acetone).

(vi) The absence of cyclonic flow must be determined prior to or during the test. For retorts and other narrow stacks where sampling is done at a single point with a standard pitot tube, a "null" check must be performed prior to sampling.

(2) A minimum of three test runs must be conducted for each performance test of each process unit. Each test run must be conducted for at least two hours and collect a minimum sample volume of 1.7 dry standard cubic meters (60 dry standard cubic feet).

(3) Tests must be conducted under operating conditions (including process or production throughputs) that are based on representative performance. Record and report the process throughput for each test run.

(4) Calculate the mercury emission rate for each process unit using Equation (1) of this section:

$$E = Cs * Qs * K \qquad \text{(Eq. 1)}$$

Where:

E = mercury emissions in lb/hr;

Cs = concentration of mercury in the stack gas, in milligrams per dry standard cubic meter (mg/dscm);

Qs = volumetric flow rate of the stack gas, in dry standard cubic feet per hour; and

K = conversion factor from mg/dscm to pounds per dry standard cubic foot, 6.23×10^{-8}.

(5) Monitor and record the number of hours each process unit operates during each month.

(6) For the initial compliance determination for both new and existing sources, determine the total mercury emissions for the 6-month period following the compliance date by multiplying the emission rate in lb/hr for each process unit by the number of hours each process unit operated during the 6-month period. After the initial 6 months following the compliance date, determine the annual mercury mass emissions in accordance with the procedures in paragraph (a)(7) of this section. Existing sources may use a previous emission test for their initial compliance determination in lieu of conducting a new test if the test was conducted within one year of the compliance date using the methods specified in paragraphs (a)(1) through (4) of this section, and the tests were representative of current operating processes and conditions.

(7) For compliance determinations following the initial compliance test for new and existing sources, determine the total mercury mass emissions for each process unit for the 12-month period preceding the performance test by multiplying the emission rate in lb/hr for each process unit by the number of hours each process unit operated during the 12-month period preceding the completion of the performance tests.

(8) You must install, calibrate, maintain and operate an appropriate weight measurement device or densitometers and volumetric flow

meters to measure ore throughput for each roasting operation and autoclave and calculate hourly, daily and monthly totals in tons of as fed ore.

(i) Measure the weight or the density and volumetric flow rate of the oxidized ore slurry as it exits the roaster oxidation circuit and before the carbon-in-leach tanks.

(ii) Measure the weight or the density and volumetric flow rate of the ore slurry as it is fed to the autoclave(s).

(9) Measure the weight of concentrate processed (by electrowinning, Merrill Crowe process, gravity feed, or other methods) using weigh scales for each batch prior to retorting. The concentrate must be weighed in the same State and condition as it is when fed to the retort. For facilities without retorts, the concentrate must be weighed prior to being fed to the melt furnace before drying in any ovens. For facilities that ship concentrate offsite, measure the weight of concentrate as shipped offsite. You must keep accurate records of the weights of each batch of concentrate processed and calculate and record the total weight of concentrate processed each month.

(10) You must maintain the systems for measuring density, volumetric flow rate, and weight within ±5 percent accuracy. You must describe the specific equipment used to make measurements at your facility and how that equipment is periodically calibrated. You must also explain, document, and maintain written procedures for determining the accuracy of the measurements and make these written procedures available to your permitting authority upon request. You must determine, record, and maintain a record of the accuracy of the measuring systems before the beginning of your initial compliance test and during each subsequent quarter of affected source operation.

(11) Record the weight in tons of ore for ore pretreatment processes and concentrate for carbon processes and for non-carbon concentrate processes on a daily and monthly basis.

(12) Calculate the emissions from each new and existing affected source for the 6-month period following the compliance date in pounds of mercury per ton of process input using the procedures in paragraphs (a)(12)(i) through (iii) of this section to determine initial compliance with the emission standards in § 63.11645. After the initial 6-month period, determine annual compliance using the procedures in paragraph (a)(13) of this section for existing sources.

(i) For ore pretreatment processes, divide the sum of mercury mass emissions from all roasting operations and autoclaves during the initial 6-month period following the compliance date by the sum of the total amount of gold mine ore processed in these process units during the 6-month period following the compliance date.

(ii) For carbon processes, divide the sum of mercury mass emissions from all carbon kilns, preg tanks, electrowinning, retorts, and melt furnaces during the initial 6-month period following the compliance date by the total amount of concentrate processed in these process units during the initial 6-month period following the compliance date.

(iii) For non-carbon concentrate processes, divide the sum of mercury mass emissions from retorts and melt furnaces during the initial 6-month period following the compliance date by the total amount of concentrate processed in these process units during the 6-month period following the compliance date.

(13) After the initial compliance test, calculate the emissions from each new and existing affected source for each 12-month period preceding each subsequent compliance test in pounds of mercury per ton of process input using the procedures in paragraphs (a)(13)(i) through (iii) of this section to determine compliance with the emission standards in § 63.11645.

(i) For ore pretreatment processes, divide the sum of mercury mass emissions from all roasting operations and autoclaves in the 12-month period preceding a compliance test by the sum of the total amount of gold mine ore processed in that 12-month period.

(ii) For carbon processes, divide the sum of mercury mass emissions from all carbon kilns, preg tanks, electrowinning, retorts, and melt furnaces in the 12-month period preceding a compliance test by the total amount of concentrate processed in these process units in that 12-month period.

(iii) For non-carbon concentrate processes, divide the sum of mercury mass emissions from retorts and melt furnaces in the 12-month period preceding a compliance test by the total amount of concentrate processed in these process units in that 12-month period.

(b) If you have a new carbon processes affected source and elect to comply with the percent reduction standard in § 63.11645(e)(2), you must perform annual tests of the inlet and outlet to each control device used in the new affected source and calculate emissions at the inlet and outlet using the methods and procedures in paragraphs (a)(1) through (7) of this section. The sampling and analysis of inlet emissions for retorts must be performed following the mercury condenser and before the carbon adsorber. Calculate the percent reduction in mercury emissions based on the difference in emission rates at the inlet and outlet to each control device. Perform a compliance determination for the initial 6-month period following the compliance date using the procedures in paragraph (a)(6) of this section. Perform compliance determinations annually following the initial 6-month period using the procedures in paragraph (a)(7) of this section.

(c) At all times, you must operate and maintain any affected source, including associated air pollution control equipment and monitoring equipment, in a manner consistent with safety and good air pollution control practices for minimizing emissions.

§ 63.11647 What are my monitoring requirements?

(a) Except as provided in paragraph (a)(4) of this section, you must monitor each roaster for mercury emissions using one of the procedures in paragraphs (a)(1) or (2) of this section and establish operating limits for mercury concentration as described in paragraph (a)(3) of this section.

(1) Perform sampling and analysis of the roaster's exhaust for mercury concentration using EPA Performance Specification 12B each week and maintain the daily average concentration below the operating limit established in paragraph (a)(3) of this section.

(i) To determine the appropriate sampling duration, you must review the available data from previous stack tests to determine the upper 99th percentile of the range of mercury concentrations in the exit stack gas. Based on this upper end of expected concentrations, select an appropriate sampling duration that is likely to provide a valid sample and not result in breakthrough of the sampling tubes. If breakthrough of the sampling tubes occurs, you must re-sample within 30 days using a shorter sampling duration.

(ii) If you measure a daily average concentration above the operating limit, you must take corrective action and correct the problem within 48 hours of the exceedance or stop the feed of ore to the roaster, and report the exceedance as a deviation.

(2) Install, operate, calibrate, and maintain a continuous emissions monitoring system (CEMS) to continuously measure the mercury concentration in the final exhaust stream from each roaster according to

the requirements of Performance Specification 12A (40 CFR part 60, appendix B) except that calibration standards traceable to the National Institute of Standards and Technology are not required. You must perform a data accuracy assessment of the CEMS according to section 5 of Appendix F in part 60 and follow the monitoring requirements in § 63.8.

(i) You must continuously monitor the daily average mercury concentration from the roaster and maintain the daily average concentration below the operating limit established in paragraph (a)(3) of this section. If you measure a daily average concentration above the operating limit, you must take corrective action and correct the problem within 48 hours of the exceedance or stop the feed of ore to the roaster, and report the exceedance as a deviation.

(ii) You must submit a monitoring plan that includes quality assurance and quality control (QA/QC) procedures sufficient to demonstrate the accuracy of the CEMS to your permitting authority for approval 180 days prior to your initial compliance test. At a minimum, the QA/QC procedures must include daily calibrations and an annual accuracy test for the CEMS.

(3) Use Equation (2) of this section to establish an upper operating limit for mercury concentration as determined by using the procedures in paragraphs (a)(1) or (2) of this section concurrently while you are also doing your annual compliance performance stack test according to the procedures in § 63.11646(a).

$$OLR = C_{test} * (149 / CT) \qquad \text{(Eq. 2)}$$

Where:

OLR = mercury concentration operating limit for the roaster (in micrograms per cubic meter);

C_{test} = average mercury concentration measured by the monitoring procedures (PS 12A or PS 12B) during the annual performance stack test (in micrograms per cubic meter);

149 = emission limit for ore pretreatment processes (in lb/million tons of ore);

CT = compliance test results for ore pretreatment processes (in lb/million tons of ore).

(4) For roasters that utilize calomel-based mercury control systems for emissions controls, you are not required to perform the monitoring for mercury emissions in paragraphs (a)(1) or (2) of this section if you demonstrate to the satisfaction of your permitting authority that mercury emissions from the roaster are less than 10 pounds of mercury per million tons of ore throughput. If you make this demonstration, you must conduct the parametric monitoring as described below in paragraphs (b) and (c) of this section.

(i) The initial demonstration must include three or more consecutive independent stack tests for mercury at least one month apart on the roaster exhaust stacks. Subsequent demonstrations may be based upon the single stack test required in paragraph (a) of section § 63.11646. The results of each of the tests must be less than 10 pounds of mercury per million tons of ore. The testing must be performed according to the procedures in § 63.11646(a)(1) through (4) to determine mercury emissions in pounds per hour.

(ii) Divide the mercury emission rate in pounds per hour by the ore throughput rate during the test expressed in millions of tons per hour to determine the emissions in pounds per million tons of ore.

(iii) You must continue to perform annual compliance tests of the roaster stack as required in § 63.11646(a). In addition, if the mercury concentration in the ore processed in the roaster increases to a level higher than any mercury concentration measured in the previous 12 months, you must perform a compliance test within 30 days of the first day that the ore with higher mercury levels is processed to determine whether the mercury emissions are still below 10 lbs per million tons of ore. If any subsequent compliance tests indicate that the roaster is emitting more than 10 pounds of mercury per million tons of ore input, then you must implement the monitoring required in paragraphs (a)(1) or (2) of this section within 30 days.

(b) For facilities with roasters and a calomel-based mercury control system that choose to monitor for mercury emissions using the procedures in paragraph (a)(1) of this section or that qualify for and choose to follow the requirements in paragraph (a)(4) of this section, you must establish operating parameters for scrubber liquor flow, scrubber pressure drop and scrubber inlet gas temperature and monitor these parameters. Monitor the scrubber liquor flow, scrubber pressure drop and scrubber inlet gas temperature during each run of your initial compliance test. The minimum operating rate for scrubber liquor flow and pressure drop are the lowest values during any run of the initial compliance test, and your maximum scrubber inlet temperature limit is the highest measured during any run of the initial compliance test. Subsequently, you must monitor the scrubber liquor flow, scrubber pressure drop and scrubber inlet gas temperature hourly and maintain the scrubber liquor flow and scrubber pressure drop at or above the operating parameters established during the initial compliance test and maintain the inlet gas temperature below the operating parameters established during the initial compliance test.

(c) For facilities with roasters and a calomel-based mercury control system that choose to monitor for mercury emissions using the procedures in paragraph (a)(1) of this section or that qualify for and follow the requirements in paragraph (a)(4) of this section, you must establish operating parameters for mercuric ion and chloride ion concentrations or for oxidation reduction potential and pH using the procedures in either paragraph (c)(1) or (2) of this section.

(1) Establish the mercuric ion concentration and chloride ion concentration range for each calomel-based mercury control system. The mercuric ion concentration and chloride ion concentration for each calomel-based mercury control system must be based on the manufacturer's specifications. Alternatively, the mercuric ion concentration and chloride ion concentration range for each calomel-based mercury control system may be approved by your permitting authority. Measure the mercuric ion concentration and chloride ion concentrations at least once during each run of your initial compliance test. The measurements must be within the established concentration range for mercuric ion concentration and chloride ion concentration. Subsequently, you must sample four times daily and maintain the mercuric ion concentration and chloride ion concentrations within their established range.

(2) Establish the oxidation reduction potential and pH range for each calomel-based mercury control system. The oxidation reduction potential and pH range for each calomel-based mercury control system must be based on the manufacturer's specifications.

Alternatively, the oxidation reduction potential and pH range for each calomel-based mercury control system may be approved by your permitting authority. Install monitoring equipment to continuously monitor the oxidation reduction potential and pH of the calomel-based mercury control system scrubber liquor. Measure the oxidation reduction potential and pH of the scrubber liquor during each run of your initial compliance test. The measurements must be within the established range for oxidation reduction potential and pH. Subsequently, you must monitor the oxidation reduction potential and pH of the scrubber liquor continuously and maintain it within the established operating range.

(d) If you have an exceedance of an operating limit or range in paragraphs (b) or (c) of this section, you must take corrective action and bring the system operations back into the specified operational range or limit within 45 minutes or commence shutdown of the roaster.

(e) You may submit a request to your permitting authority for approval to change the operating limits established under paragraph (a)(3) of this section for the monitoring required in paragraph (a)(1) or (2) of this section. In the request, you must demonstrate that the proposed change to the operating limit detects changes in levels of mercury emission control. An approved change to the operating limit under this paragraph only applies until a new operating limit is established during the next annual compliance test.

(f) You must monitor each process unit at each new and existing affected source that uses a carbon adsorber to control mercury emissions using the procedures in paragraphs (f)(1), (2), or (3) of this section.

(1) Continuously sample and analyze the exhaust stream from the carbon adsorber for mercury using Method 30B (40 CFR part 60, appendix A–8) for one week that includes the period of the annual performance test.

(i) Establish an upper operating limit for the process as determined using the mercury concentration measurements from the sorbent trap as calculated from Equation (3) of this section.

$$OLC = C_{trap} * (EL / CT) \qquad \text{(Eq. 3)}$$

Where:

OLC = mercury concentration operating limit for the process as measured using the sorbent trap, (micrograms per cubic meter);

C_{trap} = average mercury concentration measured using the sorbent trap during the week that includes the performance test, (micrograms per cubic meter);

EL = emission limit for the affected sources (lb/ton of concentrate);

CT = compliance test results for the affected sources (lb/ton of concentrate).

(ii) Sample and analyze the exhaust stream from the carbon adsorber for mercury at least monthly using Method 30B (40 CFR part 60, appendix A–8). When the mercury concentration reaches 50 percent of the operating limit, begin weekly sampling and analysis. When the mercury concentration reaches 90 percent of the operating limit, replace the carbon in the carbon adsorber within 30 days.

(2) Conduct an initial sampling of the carbon in the carbon bed for mercury 90 days after the replacement of the carbon. A representative sample must be collected from the top of the bed and the exit of the bed and analyzed using EPA Method 7471A (incorporated by reference—*see* § 63.14). The depth to which the sampler is inserted must be recorded. Calculate an average carbon loading from the two measurements. Sampling and analysis of the carbon bed for mercury must be performed quarterly thereafter. When the carbon loading reaches 50 percent of the design capacity of the carbon, monthly sampling must be performed until 90 percent of the carbon loading capacity is reached. The carbon must be removed and replaced with fresh carbon no later than 30 days after reaching 90 percent of capacity.

(3) Calculate the change out rate for the carbon in the carbon adsorber based on the carbon lifetime as determined from at least 2 years of data for the process unit from following the procedures in paragraphs (f)(1) or (2) of this section. You must submit supporting data and request approval from your permitting authority to periodically change out the carbon instead of monitoring. After approval from your permitting authority, change out the carbon in the carbon adsorber no less frequently than the established lifetime. If you change the process or inputs in such a manner that mercury emissions might increase (*e.g.,* increase throughput), you must re-establish the change out period based on two years of historical data as described in this paragraph.

(g) You must monitor gas stream temperature at the inlet to the carbon adsorber for each autoclave, carbon kiln, melt furnace, and retort equipped with a carbon adsorber during the annual performance test required in § 63.11646(a) and establish a maximum value for the inlet temperature. Establish the temperature operating limit based on either the highest reading during the test or at 10 °F higher than the average temperature measured during the performance test. Continuously monitor the inlet temperature thereafter. If an hourly average inlet temperature exceeds the temperature operating limit, you must follow the requirements for outlet concentration measurement in paragraph (f)(1) of this section. If the concentration is below 90 percent of the operating limit, you may set a new temperature operating limit 10 °F above the previous operating limit. If the concentration is above 90 percent of the operating limit, you must take corrective action to reduce the temperature back below the temperature operating limit and again measure the outlet concentration according to paragraph (f)(1) of this section. If the concentration is still above 90 percent of the operating limit, then you must change the carbon in the bed within 30 days.

(h) For each wet scrubber at each new and existing affected source, you must monitor the water flow rate and pressure drop during the performance test required in § 63.11646(a) and establish a minimum value as the operating limit based on either the lowest average value during any test run or as no lower than 10 percent of the average value measured during the test. You must continuously monitor the water flow rate and pressure drop and take corrective action within 24 hours if any daily average is less than the operating limit.

(i) You may conduct additional compliance tests according to the procedures in § 63.11646 and re-establish the operating limits required in paragraphs (a) through (c) and (f) through (h) of this section at any time.

§ 63.11648 What are my notification, reporting, and recordkeeping requirements?

(a) You must submit the Initial Notification required by § 63.9(b)(2) no later than 120 calendar days after the date of publication of the final rule in the **Federal Register** or within 120 days

after the source becomes subject to the standard. The Initial Notification must include the information specified in § 63.9(b)(2)(i) through (b)(2)(iv).

(b) You must submit an initial Notification of Compliance Status as required by § 63.9(h).

(c) If a deviation occurs during a semiannual reporting period, you must submit a deviation report to your permitting authority according to the requirements in paragraphs (c)(1) and (2) of this section.

(1) The first reporting period covers the period beginning on the compliance date specified in § 63.11641 and ending on June 30 or December 31, whichever date comes first after your compliance date. Each subsequent reporting period covers the semiannual period from January 1 through June 30 or from July 1 through December 31. Your deviation report must be postmarked or delivered no later than July 31 or January 31, whichever date comes first after the end of the semiannual reporting period.

(2) A deviation report must include the information in paragraphs (c)(2)(i) through (iv) of this section.

(i) Company name and address.

(ii) Statement by a responsible official, with the official's name, title, and signature, certifying the truth, accuracy and completeness of the content of the report.

(iii) Date of the report and beginning and ending dates of the reporting period.

(iv) Identification of the affected source, the pollutant being monitored, applicable requirement, description of deviation, and corrective action taken.

(d) If you had a malfunction during the reporting period, the compliance report must include the number, duration, and a brief description for each type of malfunction which occurred during the reporting period and which caused or may have caused any applicable emission limitation to be exceeded. The report must also include a description of actions taken by an owner or operator during a malfunction of an affected source to minimize emissions in accordance with § 63.11646(c), including actions taken to correct a malfunction.

(e) You must keep the records specified in paragraphs (e)(1) through (3) of this section.

(1) As required in § 63.10(b)(2)(xiv), you must keep a copy of each notification that you submitted to comply with this subpart and all documentation supporting any Initial Notification, Notification of Compliance Status, and semiannual compliance certifications that you submitted.

(2) You must keep the records of all performance tests, monitoring data, and corrective actions required by §§ 63.11646 and 63.11647, and the information identified in paragraphs (c)(2)(i) through (vi) of this section for each corrective action required by § 63.11647.

(i) The date, place, and time of the monitoring event requiring corrective action;

(ii) Technique or method used for monitoring;

(iv) Operating conditions during the activity;

(v) Results, including the date, time, and duration of the period from the time the monitoring indicated a problem (*e.g.,* VE) to the time that monitoring indicated proper operation; and

(vi) Maintenance or corrective action taken (if applicable).

(3) You must keep records of operating hours for each process as required by § 63.11646(a)(5) and records of the monthly quantity of ore and concentrate processed as required by § 63.11646(a)(10).

(f) Your records must be in a form suitable and readily available for expeditious review, according to § 63.10(b)(1). As specified in § 63.10(b)(1), you must keep each record for 5 years following the date of each recorded action. You must keep each record onsite for at least 2 years after the date of each recorded action according to § 63.10(b)(1). You may keep the records offsite for the remaining 3 years.

(g) After December 31, 2011, within 60 days after the date of completing each performance evaluation conducted to demonstrate compliance with this subpart, the owner or operator of the affected facility must submit the test data to EPA by entering the data electronically into EPA's WebFIRE data base through EPA's Central Data Exchange. The owner or operator of an affected facility shall enter the test data into EPA's data base using the Electronic Reporting Tool or other compatible electronic spreadsheet. Only performance evaluation data collected using methods compatible with ERT are subject to this requirement to be submitted electronically into EPA's WebFIRE database.

Other Requirements and Information

§ 63.11650 What General Provisions apply to this subpart?

Table 1 to this subpart shows which parts of the General Provisions in §§ 63.1 through 63.16 apply to you.

§ 63.11651 What definitions apply to this subpart?

Terms used in this subpart are defined in the Clean Air Act, in § 63.2, and in this section as follows:

Autoclave means a pressure oxidation vessel that is used to treat gold ores (primarily sulfide refractory ore) and involves pumping a slurry of milled ore into the vessel which is highly pressurized with oxygen and heated to temperatures of approximately 350 to 430°F.

Calomel-based mercury control system means a mercury emissions control system that uses scrubbers to remove mercury from the gas stream of a roaster or combination of roasters by complexing the mercury from the gas stream with mercuric chloride to form mercurous chloride (calomel). Sometimes these scrubbers are also referred to as "mercury scrubbers."

Carbon kiln means a kiln or furnace where carbon is regenerated by heating, usually in the presence of steam, after the gold has been stripped from the carbon.

Carbon processes means the affected source that includes carbon kilns, preg tanks, electrowinning cells, mercury retorts, and melt furnaces at gold mine ore processing and production facilities that use activated carbon to recover (adsorb) gold from the pregnant cyanide solution.

Concentrate means the sludge-like material that is loaded with gold along with various other metals (such as silver, copper, and mercury) and various other substances, that is produced by electrowinning, the Merrill-Crowe process, flotation and gravity separation processes. *Concentrate* is measured as the input to retorts, or for facilities without retorts, as the input to melt furnaces before any drying takes place. For facilities without retorts or melt furnaces, *concentrate* is measured as the quantity shipped.

Deviation means any instance where an affected source subject to this subpart, or an owner or operator of such a source:

(1) Fails to meet any requirement or obligation established by this subpart, including but not limited to any emissions limitation or work practice standard;

(2) Fails to meet any term or condition that is adopted to implement an applicable requirement in this subpart and that is included in the operating permit for any affected source required to obtain such a permit; or

(3) Exceeds any operating limit established under this subpart.

Electrowinning means a process that uses induced voltage on anode and

cathode plates to remove metals from the continuous flow of solution, where the gold in solution is plated onto the cathode. Steel wool is typically used as the plating surface.

Electrowinning Cells means a tank in which the electrowinning takes place.

Gold mine ore processing and production facility means any facility engaged in the processing of gold mine ore that uses any of the following processes: roasting operations, autoclaves, carbon kilns, preg tanks, electrowinning, retorts, or melt furnaces. A facility that produces primarily copper (where copper is 95 percent or more of the total metal production) that may also recover some gold as a byproduct is not a gold mine ore processing and production facility.

Melt furnace means a furnace (typically a crucible furnace) that is used for smelting the gold-bearing material recovered from retorting, or the gold-bearing material from electrowinning, the Merrill-Crowe process or other processes for facilities without retorts.

Merrill-Crowe process means a precipitation technique using zinc oxide for removing gold from a cyanide solution. Zinc dust is added to the solution, and gold is precipitated to produce a concentrate.

Non-carbon concentrate processes means the affected source that includes retorts and melt furnaces at gold mine ore processing and production facilities that use the Merrill-Crowe process or other processes and do not use carbon to recover (adsorb) gold from the pregnant cyanide solution.

Ore dry grinding means a process in which the gold ore is ground and heated (dried) prior to additional preheating or prior to entering the roaster.

Ore preheating means a process in which ground gold ore is preheated prior to entering the roaster.

Ore pretreatment processes means the affected source that includes roasting operations and autoclaves that are used to pre-treat gold mine ore at gold mine ore processing and production facilities prior to the cyanide leaching process.

Pregnant solution tank (or preg tank) means a storage tank for pregnant solution, which is the cyanide solution that contains gold-cyanide complexes that is generated from leaching gold ore with cyanide solution.

Pregnant cyanide solution means the cyanide solution that contains gold-cyanide complexes that are generated from leaching gold ore with a dilute cyanide solution.

Quenching means a process in which the hot calcined ore is cooled and quenched with water after it leaves the roaster.

Retort means a vessel that is operated under a partial vacuum at approximately 1,100 to 1,300 °F to remove mercury and moisture from the gold bearing sludge material that is recovered from electrowinning, the Merrill-Crowe process or other processes. Retorts are usually equipped with condensers that recover liquid mercury during the processing.

Roasting operation means a process that uses an industrial furnace in which milled ore is combusted across a fluidized bed to oxidize and remove organic carbon and sulfide mineral grains in refractory gold ore. The emissions points of the roasting operation subject to this subpart include ore dry grinding, ore preheating, the roaster stack, and quenching.

§ 63.11652 Who implements and enforces this subpart?

(a) This subpart can be implemented and enforced by the U.S. EPA or a delegated authority, such as your State, local, or Tribal agency. If the U.S. EPA Administrator has delegated authority to your State, local, or Tribal agency, then that agency has the authority to implement and enforce this subpart. You should contact your U.S. EPA Regional Office to find out if this subpart is delegated to your State, local, or Tribal agency.

(b) In delegating implementation and enforcement authority of this subpart to a State, local, or Tribal agency under 40 CFR part 63, subpart E, the authorities contained in paragraph (c) of this section are retained by the Administrator of the U.S. EPA and are not transferred to the State, local, or Tribal agency.

(c) The authorities that will not be delegated to State, local, or Tribal agencies are listed in paragraphs (c)(1) through (4) of this section.

(1) Approval of alternatives to the applicability requirements in § 63.11640, the compliance date requirements in § 63.11641, and the applicable standards in § 63.11645.

(2) Approval of an alternative nonopacity emissions standard under § 63.6(g).

(3) Approval of a major change to a test method under § 63.7(e)(2)(ii) and (f). A "major change to test method" is defined in § 63.90(a).

(4) Approval of a major change to monitoring under § 63.8(f). A "major change to monitoring" is defined in § 63.90(a).

(5) Approval of a waiver of recordkeeping or reporting requirements under § 63.10(f), or another major change to recordkeeping/reporting. A "major change to recordkeeping/reporting" is defined in § 63.90(a).

§ 63.11653 [Reserved]

Tables to Subpart EEEEEEE of Part 63

TABLE 1 TO SUBPART EEEEEEE OF PART 63—APPLICABILITY OF GENERAL PROVISIONS TO SUBPART EEEEEE

[As stated in § 63.11650, you must comply with the applicable General Provisions requirements according to the following table]

Citation	Subject	Applies to subpart EEEEEEE	Explanation
§ 63.1(a)(1), (a)(2), (a)(3), (a)(4), (a)(6), (a)(10)–(a)(12), (b)(1), (b)(3), (c)(1), (c)(2), (c)(5), (e).	Applicability	Yes.	
§ 63.1(a)(5), (a)(7)–(a)(9), (b)(2), (c)(3), (c)(4), (d).	Reserved	No.	
§ 63.2	Definitions	Yes.	
§ 63.3	Units and Abbreviations	Yes.	
§ 63.4	Prohibited Activities and Circumvention	Yes.	
§ 63.5	Preconstruction Review and Notification Requirements.	Yes.	
§ 63.6(a), (b)(1)–(b)(5), (b)(7), (c)(1), (c)(2), (c)(5), (e)(1)(iii), (f)(2), (f)(3), (g), (i), (j).	Compliance with Standards and Maintenance Requirements.	Yes.	
§ 63.6(e)(1)(i) and (ii), (e)(3), and (f)(1)	Startup, Shutdown and Malfunction Requirements (SSM).	No	Subpart EEEEEEE standards apply at all times.

TABLE 1 TO SUBPART EEEEEEE OF PART 63—APPLICABILITY OF GENERAL PROVISIONS TO SUBPART EEEEEE—Continued

[As stated in § 63.11650, you must comply with the applicable General Provisions requirements according to the following table]

Citation	Subject	Applies to subpart EEEEEEE	Explanation
§ 63.6(h)(1), (h)(2), (h)(4), (h)(5)(i), (ii), (iii) and (v), (h)(6)–(h)(9).	Compliance with Opacity and Visible Emission Limits.	No	Subpart EEEEEEE does not contain opacity or visible emission limits.
§ 63.6(b)(6), (c)(3), (c)(4), (d), (e)(2), (e)(3)(ii), (h)(3), (h)(5)(iv).	Reserved	No.	
§ 63.7, except (e)(1)	Applicability and Performance Test Dates	Yes.	
§ 63.7(e)(1)	Performance Testing Requirements Related to SSM.	No.	
§ 63.8(a)(1), (b)(1), (f)(1)–(5), (g)	Monitoring Requirements	Yes.	
§ 63.8(a)(2), (a)(4), (b)(2)–(3), (c), (d), (e), (f)(6), (g).	Continuous Monitoring Systems	Yes	Except cross references to SSM requirements in § 63.6(e)(1) and (3) do not apply.
§ 63.8(a)(3)	[Reserved]	No.	
§ 63.9(a), (b)(1), (b)(2)(i)–(v), (b)(4), (b)(5), (c), (d), (e), (g), (h)(1)–(h)(3), (h)(5), (h)(6), (i), (j).	Notification Requirements	Yes.	
§ 63.9(f)		No.	
§ 63.9(b)(3), (h)(4)	Reserved	No.	
§ 63.10(a), (b)(1), (b)(2)(vi)–(xiv), (b)(3), (c), (d)(1)–(4), (e), (f).	Recordkeeping and Reporting Requirements.	Yes.	
§ 63.10(b)(2)(i)–(v), (d)(5)	Recordkeeping/Reporting Associated with SSM.	No.	
§ 63.10(c)(2)–(c)(4), (c)(9)	Reserved	No.	
§ 63.11	Control Device Requirements	No.	
§ 63.12	State Authority and Delegations	Yes.	
§§ 63.13–63.16	Addresses, Incorporations by Reference, Availability of Information, Performance Track Provisions.	Yes.	

[FR Doc. 2010–9363 Filed 4–27–10; 8:45 am]

BILLING CODE 6560–50–P

Reader Aids

Federal Register

Vol. 75, No. 81

Wednesday, April 28, 2010

CUSTOMER SERVICE AND INFORMATION

Federal Register/Code of Federal Regulations
General Information, indexes and other finding aids **202–741–6000**
Laws **741–6000**

Presidential Documents
Executive orders and proclamations **741–6000**
The United States Government Manual **741–6000**

Other Services
Electronic and on-line services (voice) **741–6020**
Privacy Act Compilation **741–6064**
Public Laws Update Service (numbers, dates, etc.) **741–6043**
TTY for the deaf-and-hard-of-hearing **741–6086**

ELECTRONIC RESEARCH

World Wide Web

Full text of the daily Federal Register, CFR and other publications is located at: **http://www.gpoaccess.gov/nara/index.html**
Federal Register information and research tools, including Public Inspection List, indexes, and links to GPO Access are located at: **http://www.archives.gov/federal__register**

E-mail

FEDREGTOC-L (Federal Register Table of Contents LISTSERV) is an open e-mail service that provides subscribers with a digital form of the Federal Register Table of Contents. The digital form of the Federal Register Table of Contents includes HTML and PDF links to the full text of each document.
To join or leave, go to **http://listserv.access.gpo.gov** and select *Online mailing list archives, FEDREGTOC-L, Join or leave the list (or change settings);* then follow the instructions.
PENS (Public Law Electronic Notification Service) is an e-mail service that notifies subscribers of recently enacted laws.
To subscribe, go to **http://listserv.gsa.gov/archives/publaws-l.html** and select *Join or leave the list (or change settings);* then follow the instructions.
FEDREGTOC-L and **PENS** are mailing lists only. We cannot respond to specific inquiries.
Reference questions. Send questions and comments about the Federal Register system to: **fedreg.info@nara.gov**
The Federal Register staff cannot interpret specific documents or regulations.
Reminders. Effective January 1, 2009, the Reminders, including Rules Going Into Effect and Comments Due Next Week, no longer appear in the Reader Aids section of the Federal Register. This information can be found online at **http://www.regulations.gov.**
CFR Checklist. Effective January 1, 2009, the CFR Checklist no longer appears in the Federal Register. This information can be found online at **http://bookstore.gpo.gov/.**

FEDERAL REGISTER PAGES AND DATE, APRIL

16325–16640 1
16641–17024 2
17025–17280 5
17281–17554 6
17555–17846 7
17847–18046 8
18047–18376 9
18377–18746 12
18747–19180 13
19181–19532 14
19533–19872 15
19873–20236 16
20237–20510 19
20511–20770 20
20771–20894 21
20895–21154 22
21155–21498 23
21499–21972 26
21973–22202 27
22203–22496 28

CFR PARTS AFFECTED DURING APRIL

At the end of each month, the Office of the Federal Register publishes separately a List of CFR Sections Affected (LSA), which lists parts and sections affected by documents published since the revision date of each title.

2 CFR
2245 22205

3 CFR
Proclamations:
8485 18747
8487 17025
8488 17837
8489 17839
8490 17841
8491 17843
8492 17845
8493 17847
8494 18749
8495 19181
8496 19183
8497 19876
8498 20887
8499 20889
8500 20891
8501 20893
8502 21155
8503 21977
Executive Orders:
13536 19869
13537 20237
13538 20895
13539 21973
Administrative Orders:
Memorandums:
Memorandum of April 6, 2010 18045
Memorandum of April 7, 2010 19533
Memorandum of April 15, 2010 20511
Memorandum of April 16, 2010 20767
Memorandum of April 20, 2010 22203
Presidential Determinations:
No. 2010-05 of April 7, 2010 19537
No. 2010-06 of April 7, 2010 19535

4 CFR
Proposed Rules:
200 20298

5 CFR
894 20513
Proposed Rules:
532 17316
550 18133
831 20299
841 20299
890 20314
892 20314
Ch. LXXX 19909

7 CFR
1 17555
3 17555
91 17281
205 17555
226 16325
274 18377
319 ..... 17289, 22207
735 17555
760 19185
800 17555
900 17555
916 17027
917 17027
925 17031
929 ..... 18394, 20514
932 22211
944 17031
948 17034
989 20897
996 22213
1001 21157
1005 21157
1006 21157
1007 21157
1030 21157
1032 21157
1033 21157
1124 21157
1126 21157
1131 21157
1170 17555
1245 18396
1400 19185
1412 19185
1421 19185
1435 17555
3431 20239
Proposed Rules:
28 22026
210 20316
215 20316
220 20316
225 20316
226 20316
253 22027
916 17072
917 17072
956 18428
1245 18430
4279 20044
4287 20044
4288 ..... 20073, 20085, 21191

9 CFR
102 20771
103 20771
104 20771
108 20771
112 20771
113 20771
114 20771
116 20771

124.....20771
206.....16641
Proposed Rules:
94.....19915

10 CFR

1.....21979
20.....21979
30.....21979
40.....21979
51.....20248
55.....21979
70.....21979
73.....21979
140.....16645
430 .....20112, 21981, 22213
431.....17036
Proposed Rules:
51.....16360
430 .....16958, 17075, 19296
431 .....17078, 17079, 17080, 19297, 22031

11 CFR

8.....19873
111.....19873

12 CFR

4.....17849
205.....16580
370.....20257
611.....18726
613.....18726
615.....18726
619.....18726
620.....18726
918.....17037
1261.....17037
Proposed Rules:
701.....17083
708a.....17083
708b.....17083
1203.....17622
1705.....17622

13 CFR

Proposed Rules:
115.....21521

14 CFR

23.....20516, 20518
25.....18399
27.....17041
29.....17041
39 .....16646, 16648, 16651, 16655, 16657, 16660, 16662, 16664, 17295, 19193, 19196, 19199, 19201, 19203, 19207, 19209, 20265, 21161, 21499
61.....19877
63.....19877
65.....19877
67.....17047
71 .....16329, 16330, 16331, 16333, 16335, 16336, 17851, 17852, 18047, 18402, 18403, 19212, 20773, 20774
73.....17561
91.....17041
97 .....19539, 19541, 21981, 21983, 22215, 22217
121.....17041
125.....17041
135.....17041
234.....17050
Proposed Rules:
21.....18134
23.....16676
25.....16676
27.....16676
29.....16676
33.....21523
39 .....16361, 16683, 16685, 16689, 16696, 17084, 17086, 17630, 17632, 17879, 17882, 17884, 17887, 17889, 18446, 18774, 19564, 20787, 20790, 20792, 20931, 20933, 21528, 21530, 22043
71 .....17322, 17637, 17891, 17892, 20320, 20321, 20322, 20323, 20528, 20794, 21532, 22044, 22045

15 CFR

740.....17052
748.....17052
750.....17052
762.....17052
772.....20520
774.....20520
902.....18262
922.....17055
Proposed Rules:
922.....22047

16 CFR

1450.....21985
Proposed Rules:
312.....17089
1217.....22291
1218.....22303
1500.....20533

17 CFR

190.....17297
232.....17853
Proposed Rules:
240.....21456
242.....20738
249.....21456

18 CFR

1b.....21503
38.....20901
40.....16914
284.....16337
358.....20909
Proposed Rules:
35.....20796

20 CFR

618.....16988
Proposed Rules:
350.....20299
404.....20299
416.....20299

21 CFR

Ch. I.....16353
1.....20913
2.....19213
10.....16345
118.....18751
510.....20522, 20523
522.....20268
524.....16346
529.....21162
558.....20917
801.....20913
803.....20913
807.....20913
812.....20913
814.....16347, 20913
820.....20913
822.....20913
860.....20913
900.....20913
1002.....16351, 20913
1003.....16351
1004.....16351
1005.....16351
1010.....16351
1020.....16351
1030.....16351
1040.....16351, 20913
1050.....16351
Proposed Rules:
165.....16363
814.....16365
882.....17093
890.....17093

23 CFR

Proposed Rules:
655.....20935
1200.....22317
1300.....22317

24 CFR

202.....20718
570.....17303
1003.....20269
Proposed Rules:
577.....20541
1000.....19920

26 CFR

1.....17854
301.....17854
602.....17854
Proposed Rules:
1.....20941
54.....19297

27 CFR

17.....16666
19.....16666
20.....16666
22.....16666
24.....16666
25.....16666
26.....16666
27.....16666
28.....16666
31.....16666
40.....16666
44.....16666
46.....16666
70.....16666

28 CFR

20.....18751
540.....21163
Proposed Rules:
540.....17324

29 CFR

2203.....18403
2204.....18403
2700.....21987
4022.....19542
Proposed Rules:
2201.....22320
2590.....19297

30 CFR

18.....17512, 20918
50.....21990
74.....17512
75.....17512, 20918
100.....21990
250.....20271, 22219
936.....18048
Proposed Rules:
943.....21534

31 CFR

103.....19241
Proposed Rules:
212.....20299

32 CFR

199.....18051
279.....19878, 21505
2004.....17305
Proposed Rules:
108.....18138
655.....19302
1701.....16698

33 CFR

83.....19544
100.....20294
117 .....17561, 18055, 19245, 20775, 20776, 20918, 22228
147.....18404, 19880
165 .....18055, 18056, 18058, 18755, 19246, 19248, 19250, 19882, 20523, 20776, 20778, 20920, 21164, 21167, 21990, 21993, 22228, 22232, 22234
167.....17562
334.....19885
Proposed Rules:
100 .....16700, 17099, 17103, 21191, 21194
110.....22323
150.....16370
165 .....16370, 16374, 16703, 17106, 17329, 18449, 18451, 18776, 18778, 19304, 19307, 20799, 20802, 22330, 22333, 22336

34 CFR

Ch. II.....16668, 18407
280.....21506

36 CFR

1200.....19555
1253.....19555
1280.....19555
Proposed Rules:
1191.....18781
1193.....18781
1194.....18781
1206.....17638

37 CFR

41.....19558
201.....20526
Proposed Rules:
380.....16377

38 CFR

1.....17857
59.....17859
Proposed Rules:
1.....20299

17.....17641
51.....17644
59.....17641

39 CFR

111.....17861
3001.....22190
3005.....22190

40 CFR

9.....16670
50.....17004
51.....17004, 17254
52 .....16671, 17307, 17863, 17865, 17868, 18061, 18068, 18757, 19468, 19886, 20780, 20783, 20922, 21169
60.....19252
61.....19252
63.....19252
70.....17004
71.....17004
93.....17254
180 .....17564, 17566, 17571, 17573, 17579, 19261, 19268, 19272, 20785, 22240, 22245, 22252, 22256
272.....17309
721.....16670

Proposed Rules:

9.....22470
51.....19567
52 .....16387, 16388, 16706, 17894, 18142, 18143, 18782, 19567, 19920, 19921, 19923, 20805, 20942, 21197, 22047
60.....19310
61.....19310
63.....19310, 22470
81.....22047
87.....22470
98 .....17331, 18455, 18576, 18608, 18652
228.....19311
261.....20942
268.....20942
272.....17332
302.....20942
372.....17333, 19319
721.....16706
761.....17645

42 CFR

417.....19678
422.....19678
423.....19678
480.....19678
483.....21175

Proposed Rules:

84.....20546
416.....21207

44 CFR

64 .....18408, 19891, 22263
65 .....18070, 18072, 18073, 18076, 18079, 18082, 18084, 18086, 18088, 18090
67.....18091, 19895

Proposed Rules:

67.....19320, 19328

45 CFR

89.....18760
286.....17313
1609.....21506
1610.....21506
1642.....21506
2545.....22205

Proposed Rules:

146.....19297, 19335
148.....19297, 19335

46 CFR

393.....18095

Proposed Rules:

2.....21212

47 CFR

2.....19277
11.....19559
20.....22263
36.....17872
54.....17584, 17872
73.....17874, 19907
74.....17055
78.....17055
90.....19277
95.....19277

Proposed Rules:

1.....21536
20.....22338
27.....17349
36.....17109
73 .....19338, 19339, 19340
87.....22352
90.....19340
97.....20951

48 CFR

Ch. I.....19168, 19179
2.....19168
3.....21508
7.....19168
17.....19168
22.....19168
52.....19168
204.....18030
206.....18035
225.....18035
234.....18034
235.....18030, 18034
252.....18030, 18035
Ch. XIV 19828

Proposed Rules:

31.....19345
202.....20954
203.....20954
212.....20954
223.....18041
252.....18041, 20954

49 CFR

22.....19285
23.....16357
350.....17208
367.....21993
385.....17208
395.....17208
396.....17208
571 .....17590, 17604, 17605
580.....20925

Proposed Rules:

172.....17111
173.....17111
176.....17111
383.....16391
384.....16391
390.....16391
391.....16391
392.....16391
571.....21567
580.....20965
1244.....16712

50 CFR

17 .....17062, 17466, 18107, 18782, 21179, 21394, 22012
32.....18413
36.....16636
92.....18764
223.....21512, 22276
224.....22276
300.....18110
622.....18427, 21512
648 .....17618, 18113, 18262, 18356, 20786, 21189, 22025
665.....17070
679 .....16359, 17315, 19561, 19562, 20526

Proposed Rules:

17 .....16404, 17352, 17363, 17667, 18960, 19575, 19591, 19592, 19925, 20547, 20974, 21568, 22063
18.....21571
223.....16713
224.....16713
300.....22070
622.....20548
648 .....16716, 20550, 22073, 22087

LIST OF PUBLIC LAWS

This is a continuing list of public bills from the current session of Congress which have become Federal laws. It may be used in conjunction with ''P L U S'' (Public Laws Update Service) on 202–741–6043. This list is also available online at *http://www.archives.gov/federal-register/laws.html*.

The text of laws is not published in the **Federal Register** but may be ordered in ''slip law'' (individual pamphlet) form from the Superintendent of Documents, U.S. Government Printing Office, Washington, DC 20402 (phone, 202–512–1808). The text will also be made available on the Internet from GPO Access at *http://www.gpoaccess.gov/plaws/index.html*. Some laws may not yet be available.

H.R. 4573/P.L. 111–158

Haiti Debt Relief and Earthquake Recovery Act of 2010 (Apr. 26, 2010; 124 Stat. 1121)

H.R. 4887/P.L. 111–159

TRICARE Affirmation Act (Apr. 26, 2010; 124 Stat. 1123)

S.J. Res. 25/P.L. 111–160

Granting the consent and approval of Congress to amendments made by the State of Maryland, the Commonwealth of Virginia, and the District of Columbia to the Washington Metropolitan Area Transit Regulation Compact. (Apr. 26, 2010; 124 Stat. 1124)

Last List April 20, 2010

Public Laws Electronic Notification Service (PENS)

PENS is a free electronic mail notification service of newly enacted public laws. To subscribe, go to *http://listserv.gsa.gov/archives/publaws-l.html*

Note: This service is strictly for E-mail notification of new laws. The text of laws is not available through this service. **PENS** cannot respond to specific inquiries sent to this address.