AUTHENTICATED U.S. GOVERNMENT INFORMATION GPO

# Federal Register

3–9–10 Tuesday
Vol. 75 No. 45 Mar. 9, 2010

Pages 10631–10990

The **FEDERAL REGISTER** (ISSN 0097–6326) is published daily, Monday through Friday, except official holidays, by the Office of the Federal Register, National Archives and Records Administration, Washington, DC 20408, under the Federal Register Act (44 U.S.C. Ch. 15) and the regulations of the Administrative Committee of the Federal Register (1 CFR Ch. I). The Superintendent of Documents, U.S. Government Printing Office, Washington, DC 20402 is the exclusive distributor of the official edition. Periodicals postage is paid at Washington, DC.

The **FEDERAL REGISTER** provides a uniform system for making available to the public regulations and legal notices issued by Federal agencies. These include Presidential proclamations and Executive Orders, Federal agency documents having general applicability and legal effect, documents required to be published by act of Congress, and other Federal agency documents of public interest.

Documents are on file for public inspection in the Office of the Federal Register the day before they are published, unless the issuing agency requests earlier filing. For a list of documents currently on file for public inspection, see *www.federalregister.gov.*

**The seal of the National Archives and Records Administration authenticates the Federal Register** as the official serial publication established under the Federal Register Act. Under 44 U.S.C. 1507, the contents of the **Federal Register** shall be judicially noticed.

The **Federal Register** is published in paper and on 24x microfiche. It is also available online at no charge as one of the databases on GPO Access, a service of the U.S. Government Printing Office.

The online edition of the **Federal Register**, *www.gpoaccess.gov/nara,* available through GPO Access, is issued under the authority of the Administrative Committee of the Federal Register as the official legal equivalent of the paper and microfiche editions (44 U.S.C. 4101 and 1 CFR 5.10). It is updated by 6 a.m. each day the **Federal Register** is published and includes both text and graphics from Volume 59, Number 1 (January 2, 1994) forward.

For more information about GPO Access, contact the GPO Access User Support Team, call toll free 1-888-293-6498; DC area 202-512-1530; fax at 202-512-1262; or via e-mail at *gpoaccess@gpo.gov.* The Support Team is available between 7:00 a.m. and 9:00 p.m. Eastern Time, Monday–Friday, except official holidays.

The annual subscription price for the **Federal Register** paper edition is $749 plus postage, or $808, plus postage, for a combined **Federal Register, Federal Register** Index and List of CFR Sections Affected (LSA) subscription; the microfiche edition of the **Federal Register** including the **Federal Register** Index and LSA is $165, plus postage. Six month subscriptions are available for one-half the annual rate. The prevailing postal rates will be applied to orders according to the delivery method requested. The price of a single copy of the daily **Federal Register,** including postage, is based on the number of pages: $11 for an issue containing less than 200 pages; $22 for an issue containing 200 to 400 pages; and $33 for an issue containing more than 400 pages. Single issues of the microfiche edition may be purchased for $3 per copy, including postage. Remit check or money order, made payable to the Superintendent of Documents, or charge to your GPO Deposit Account, VISA, MasterCard, American Express, or Discover. Mail to: U.S. Government Printing Office—New Orders, P.O. Box 979050, St. Louis, MO 63197-9000; or call toll free 1-866-512-1800, DC area 202-512-1800; or go to the U.S. Government Online Bookstore site, see *bookstore.gpo.gov.*

There are no restrictions on the republication of material appearing in the **Federal Register.**

**How To Cite This Publication:** Use the volume number and the page number. Example: 75 FR 12345.

**Postmaster:** Send address changes to the Superintendent of Documents, Federal Register, U.S. Government Printing Office, Washington, DC 20402, along with the entire mailing label from the last issue received.

## SUBSCRIPTIONS AND COPIES

| | |
|---|---|
| **PUBLIC** | |
| **Subscriptions:** | |
| Paper or fiche | **202–512–1800** |
| Assistance with public subscriptions | **202–512–1806** |
| **General online information** | **202–512–1530; 1–888–293–6498** |
| **Single copies/back copies:** | |
| Paper or fiche | **202–512–1800** |
| Assistance with public single copies | **1–866–512–1800 (Toll-Free)** |
| **FEDERAL AGENCIES** | |
| **Subscriptions:** | |
| Paper or fiche | **202–741–6005** |
| Assistance with Federal agency subscriptions | **202–741–6005** |

Printed on recycled paper.

# Contents

**Federal Register**

Vol. 75, No. 45

Tuesday, March 9, 2010

**Agriculture Department**
*See* Animal and Plant Health Inspection Service
*See* Forest Service

**Animal and Plant Health Inspection Service**
**RULES**
Agricultural Inspection and AQI User Fees Along the U.S./Canada Border, 10634–10644
Voluntary Control Program and Payment of Indemnity:
Low Pathogenic Avian Influenza, 10645–10658

**Arts and Humanities, National Foundation**
*See* National Foundation on the Arts and the Humanities

**Blind or Severely Disabled, Committee for Purchase From People Who Are**
*See* Committee for Purchase From People Who Are Blind or Severely Disabled

**Census Bureau**
**NOTICES**
Meetings:
2010 Census Advisory Committee, 10760

**Centers for Disease Control and Prevention**
**NOTICES**
Agency Information Collection Activities; Proposals, Submissions, and Approvals, 10803–10805
Meetings:
Subcommittee on Procedures Reviews, Advisory Board on Radiation and Worker Health, National Institute for Occupational Safety and Health, 10807–10808

**Children and Families Administration**
**NOTICES**
Agency Information Collection Activities; Proposals, Submissions, and Approvals, 10805

**Civil Rights Commission**
**NOTICES**
Meetings:
Arkansas Advisory Committee, 10755
Mississippi Advisory Committee, 10755

**Coast Guard**
**RULES**
Regulated Navigation Areas:
Bars Along the Coasts of Oregon and Washington; Correction, 10687–10688

**Commerce Department**
*See* Census Bureau
*See* Economic Analysis Bureau
*See* International Trade Administration
*See* National Oceanic and Atmospheric Administration

**Committee for Purchase From People Who Are Blind or Severely Disabled**
**NOTICES**
Appointments to Performance Review Board for Senior Executive Service, 10789

**Defense Acquisition Regulations System**
**NOTICES**
Agency Information Collection Activities; Proposals, Submissions, and Approvals:
Defense Federal Acquisition Regulation Supplement; Notification Requirements for Critical Safety Items, 10790–10791

**Defense Department**
*See* Defense Acquisition Regulations System
**NOTICES**
Meetings:
Uniform Formulary Beneficiary Advisory Panel, 10789–10790

**Department of Transportation**
*See* Pipeline and Hazardous Materials Safety Administration

**Drug Enforcement Administration**
**RULES**
Changes to and Consolidation of DEA Mailing Addresses, 10671–10687

**Economic Analysis Bureau**
**PROPOSED RULES**
International Services Surveys:
Benchmark Survey of Financial Services Transactions between U.S. Financial Services Providers and Foreign Persons, 10704–10707

**Election Assistance Commission**
**NOTICES**
Meetings; Sunshine Act, 10791

**Employment and Training Administration**
**NOTICES**
Amended Certification Regarding Eligibility to Apply for Worker Adjustment Assistance:
FCI USA, LLC, Mount Union, PA, 10822

**Energy Department**
**RULES**
Energy Conservation Program for Certain Commercial and Industrial Equipment:
Test Procedure for Metal Halide Lamp Ballasts (Active and Standby Modes), 10950–10971
Energy Conservation Program:
Energy Conservation Standards for Small Electric Motors, 10874–10948
**NOTICES**
Agency Information Collection Activities; Proposals, Submissions, and Approvals:
Certification, Compliance, and Enforcement Requirements for Consumer Products and Certain Commercial and Industrial Equipment, 10972
Meetings:
Blue Ribbon Commission on America's Nuclear Future, 10791

**Environmental Protection Agency**
RULES
Revisions to the California State Implementation Plan:
San Joaquin Valley Air Pollution Control District, 10690–10692
NOTICES
Agency Information Collection Activities; Proposals, Submissions, and Approvals:
Questionnaire for Steam Electric Power Generating Effluent Guidelines, 10791–10793
FY 2010 Supplemental Funding for Brownfields Revolving Loan Fund Grantees, 10793–10794
Request for Nominations:
Clean Air Act Advisory Committee, 10794

**Executive Office of the President**
*See* Presidential Documents
*See* Science and Technology Policy Office

**Federal Aviation Administration**
RULES
Airworthiness Directives:
Boeing Co. Model 737–100, –200, –200C, –300, –400, and –500 Series Airplanes, 10658–10664
Boeing Co. Model 747–100, 747–200B, 747–300, and 747SR Series Airplanes, 10669–10671
Bombardier Model DHC–8–102, DHC–8–103, DHC–8–106, DHC–8–201, and DHC–8–202 Series Airplanes, 10664–10666
Bombardier, Inc. Model CL 600 2B19 (Regional Jet Series 100 & 440) Airplanes, 10667–10669
PROPOSED RULES
Airworthiness Directives:
AeroSpace Technologies of Australia Pty Ltd Models N22B, N22S, and N24A Airplanes, 10694–10696
BAE SYSTEMS (Operations) Limited Model BAe 146 Airplanes and Model Avro 146 RJ Airplanes, 10701–10704
Fokker Services B.V. Model F.28 Mark 0070 and 0100 Airplanes, 10696–10700

**Federal Communications Commission**
RULES
Maritime Communications; Correction, 10692–10693
Television Broadcasting Services:
Birmingham, AL, 10692

**Federal Mine Safety and Health Review Commission**
NOTICES
Meetings; Sunshine Act:, 10795

**Federal Reserve System**
NOTICES
Change in Bank Control Notices; Acquisition of Shares of Bank or Bank Holding Companies, 10795
Meetings; Sunshine Act, 10795

**Federal Retirement Thrift Investment Board**
NOTICES
Meetings; Sunshine Act, 10795

**Federal Trade Commission**
PROPOSED RULES
Mortgage Assistance Relief Services, 10707–10738
NOTICES
Analysis of Agreement Containing Consent Order to Aid Public Comment:
PepsiCo, Inc., 10795–10798
Analysis of Proposed Consent Order to Aid Public Comment:
Richard J. Stanton, 10798–10799
Analysis to Aid Public Comment:
Transitions Optical, Inc., 10799–10803

**Federal Transit Administration**
NOTICES
Preparation of an Alternatives Analysis and Environmental Impact Statement:
High Capacity Transit Improvements for the Indianapolis Northeast Corridor in the Indiana Counties of Marion and Hamilton, 10860–10862

**Fish and Wildlife Service**
NOTICES
Proposed Programmatic Safe Harbor Agreement:
Sacramento River Conservation Area Forum in Shasta, Tehama, Butte, Glenn, Colusa, Yolo, and Sutter Counties, CA, 10814–10815

**Food and Drug Administration**
NOTICES
Determination:
DOVONEX (Calcipotriene) Ointment, 0.005%, Was Not Withdrawn From Sale for Reasons of Safety or Effectiveness, 10805–10806
Information Available to Industry:
Training Program for Regulatory Project Managers, 10806–10807
Withdrawal of Color Additive Petitions:
CIBA Vision Corp., 10808–10809

**Forest Service**
NOTICES
Environmental Impact Statements; Availability, etc.:
Humboldt–Toiyabe National Forests; Santa Rosa Ranger District; Martin Basin Rangeland Management Project, 10754–10755

**Health and Human Services Department**
*See* Centers for Disease Control and Prevention
*See* Children and Families Administration
*See* Food and Drug Administration
*See* National Institutes of Health

**Homeland Security Department**
*See* Coast Guard
RULES
Privacy Act of 1974; Implementation of Exemptions:
Department of Homeland Security/U.S. Immigration and Customs Enforcement – 011 Removable Alien Records System of Records, 10633–10634
NOTICES
Agency Information Collection Activities; Proposals, Submissions, and Approvals:
United States Visitor and Immigrant Status Indicator Technology, 10809

**Interior Department**
*See* Fish and Wildlife Service
*See* Land Management Bureau
*See* National Park Service
*See* Special Trustee for American Indians Office
NOTICES
Renewal:
Outer Continental Shelf Scientific Committee, 10809–10810

**Internal Revenue Service**
NOTICES
Meetings:
Area 3 Taxpayer Advocacy Panel, 10865
Area 5 Taxpayer Advocacy Panel, 10864
Area 6 Taxpayer Advocacy Panel, 10865
Taxpayer Advocacy Panel Notice Improvement Project Committee, 10864–10865
Taxpayer Advocacy Panel Tax Forms and Publications/MLI Project Committee, 10865
Taxpayer Advocacy Panel Volunteer Income Tax Assistance Issue Committee, 10864

**International Trade Administration**
NOTICES
Initiation of Antidumping Duty and Countervailing Duty New Shipper Reviews:
Polyethylene Terephthalate Film, Sheet and Strip from India, 10758
Initiation of Anti–dumping Duty Changed-Circumstances Review:
Carbazole Violet Pigment 23 from India, 10759
Preliminary Affirmative Countervailing Duty Determination and Alignment of Final Countervailing Duty Determination, etc.:
Certain Coated Paper from Indonesia, 10761–10774
Certain Coated Paper Suitable for High-Quality Print Graphics Using Sheet-Fed Presses from the People's Republic of China, 10774–10789

**International Trade Commission**
NOTICES
Investigations:
Proposed Modifications to the Harmonized Tariff Schedule of the United States, 10818–10820

**Justice Department**
*See* Drug Enforcement Administration

**Labor Department**
*See* Employment and Training Administration
*See* Labor Statistics Bureau
*See* Occupational Safety and Health Administration
*See* Veterans Employment and Training Service

**Labor Statistics Bureau**
NOTICES
Agency Information Collection Activities; Proposals, Submissions, and Approvals, 10820–10821

**Land Management Bureau**
NOTICES
Application for Recordable Disclaimer of Interest in Lands, Gem County, ID, 10811
Intent to Prepare a Resource Management Plan Amendment, etc.:
Fort Stanton – Snowy River Cave National Conservation Area, New Mexico, 10811–10813
Meetings:
Southeast Oregon Resource Advisory Council, 10813–10814
Steens Mountain Advisory Council, 10813
Proposed Withdrawal Extension and Opportunity for Public Meeting:
Oregon, 10815–10816
Proposed Withdrawal Extension, In-Part, and Opportunity for Public Meeting:
Oregon, 10816–10817
Realty Action:
Recreation and Public Purposes Act Classification and Conveyance; Lake County, FL, 10817–10818
Resource Advisory Council Vacancies, 10818

**Millennium Challenge Corporation**
NOTICES
Meetings; Sunshine Act, 10822–10823

**Mine Safety and Health Federal Review Commission**
*See* Federal Mine Safety and Health Review Commission

**National Foundation on the Arts and the Humanities**
NOTICES
Meetings:
National Council on the Arts, 10823

**National Highway Traffic Safety Administration**
PROPOSED RULES
Safety Labeling:
New Car Assessment Program, 10740–10753

**National Institutes of Health**
NOTICES
Meetings:
National Institute on Alcohol Abuse and Alcoholism, 10807–10808
National Institute on Nursing Research, 10808

**National Oceanic and Atmospheric Administration**
RULES
Fisheries of the Caribbean, Gulf of Mexico, and South Atlantic:
Snapper–Grouper Resources of the South Atlantic; Trip Limit Reduction, 10693
NOTICES
Agency Information Collection Activities; Proposals, Submissions, and Approvals:
2010 NOAA Engagement Survey Tool, 10755–10756
Alaska Region Amendment 80 Permits and Reports, 10757
Amendment 80 Economic Data Report for the Catcher/Processor Non-AFA Trawl Sector, 10756–10757
Meetings:
Gulf of Mexico Fishery Management Council, 10760–10761
New England Fishery Management Council, 10759–10760

**National Park Service**
NOTICES
National Register of Historic Places:
Weekly Listing of Historic Properties, 10814

**Nuclear Regulatory Commission**
NOTICES
Applications and Amendments to Facility Operating Licenses Involving No Significant Hazards Considerations, 10823–10833
Demand for Information:
Entergy Nuclear Operation; Vermont Yankee Nuclear Power Station, 10833–10834
Environmental Assessment and Finding of No Significant Impact:
Columbia Generating Station, 10834–10835
Omaha Public Power District; Fort Calhoun Station (Unit 1), 10835–10836
Exemption:
FirstEnergy Nuclear Operating Co. et al.; Beaver Valley Power Station (Unit Nos. 1 and 2), 10836–10837

Pacific Gas and Electric Co.; Diablo Canyon Power Plant, 10838–10839
South Carolina Electric and Gas Co.; Virgil C. Summer Nuclear Station (Unit 1), 10839–10840
Meetings:
Advisory Committee on Reactor Safeguards, Subcommittee on Advanced Boiled Water Reactor, 10840–10841
Meetings; Sunshine Act, 10841–10842

**Occupational Safety and Health Administration**
**PROPOSED RULES**
Combustible Dust; Stakeholders Meetings, 10739–10740
Occupational Injury and Illness Recording and Reporting Requirements, 10738–10739

**Pipeline and Hazardous Materials Safety Administration**
**RULES**
Hazardous Materials:
Risk-Based Adjustment of Transportation Security Plan Requirements, 10974–10989

**Postal Regulatory Commission**
**NOTICES**
Post Office Closing, 10842–10843
Special Summer Postal Rate Program, 10843–10845

**Presidential Documents**
**PROCLAMATIONS**
Special Observances:
Women's History Month (Proc. 8481), 10631–10632

**Saint Lawrence Seaway Development Corporation**
**RULES**
Seaway Regulations and Rules:
Periodic Update, Various Categories, 10688–10690

**Science and Technology Policy Office**
**NOTICES**
Nominations for Interagency Working Group Participants:
Subcommittee on Forensic Science; Committee on Science; National Science and Technology Council, 10845–10846

**Securities and Exchange Commission**
**NOTICES**
Agency Information Collection Activities; Proposals, Submissions, and Approvals, 10846
Application:
Chile Fund, Inc., et al., 10846–10850
Meetings; Sunshine Act:, 10850–10851
Self-Regulatory Organizations; Proposed Rule Changes:
Chicago Board Options Exchange, 10853–10855
NASDAQ OMX PHLX, Inc., 10857–10858
New York Stock Exchange, LLC, 10855–10856
NYSE Amex LLC, 10851–10853, 10858–10860

**Small Business Administration**
**NOTICES**
Disaster Declaration:
Arkansas, 10845
North Dakota, 10845

**Special Trustee for American Indians Office**
**NOTICES**
Agency Information Collection Activities; Proposals, Submissions, and Approvals:
Trust Funds for Tribes and Individual Indians, 10810–10811

**State Department**
**NOTICES**
Meetings:
International Telecommunication Advisory Committee, 10860

**Tennessee Valley Authority**
**NOTICES**
Shoreline Management Initiative; Amendment to Record of Decision:
Reservoirs in Alabama, Georgia, Kentucky, Mississippi, North Carolina, Tennessee, and Virginia, 10865–10866

**Thrift Supervision Office**
**NOTICES**
Agency Information Collection Activities; Proposals, Submissions, and Approvals:
34 Disclosures, 10862–10863
Savings Association Holding Company Report (H–(b)11), 10863–10864

**Transportation Department**
*See* Federal Aviation Administration
*See* Federal Transit Administration
*See* National Highway Traffic Safety Administration
*See* Pipeline and Hazardous Materials Safety Administration
*See* Saint Lawrence Seaway Development Corporation

**Treasury Department**
*See* Internal Revenue Service
*See* Thrift Supervision Office

**Utah Reclamation Mitigation and Conservation Commission**
**NOTICES**
Project Waiver of Section 1605 (Buy American Requirement) of the American Recovery and Reinvestment Act (of 2009):
Utah Division of Wildlife Resources, 10866–10867

**Veterans Affairs Department**
**NOTICES**
Determinations Concerning Illnesses Discussed in Institute of Medicine Report:
Gulf War and Health: Updated Literature Review of Depleted Uranium, 10867–10871

**Veterans Employment and Training Service**
**NOTICES**
Agency Information Collection Activities; Proposals, Submissions, and Approvals:
Uniformed Services Employment and Reemployment Rights Act and Veteran's Preference, 10821–10822

---

**Separate Parts In This Issue**

**Part II**
Energy Department, 10874–10948

**Part III**
Energy Department, 10950–10972

**Part IV**
Transportation Department, Pipeline and Hazardous Materials Safety Administration, 10974–10989

**Reader Aids**

Consult the Reader Aids section at the end of this page for phone numbers, online resources, finding aids, reminders, and notice of recently enacted public laws.

To subscribe to the Federal Register Table of Contents LISTSERV electronic mailing list, go to http://listserv.access.gpo.gov and select Online mailing list archives, FEDREGTOC-L, Join or leave the list (or change settings); then follow the instructions.

## CFR PARTS AFFECTED IN THIS ISSUE

A cumulative list of the parts affected this month can be found in the Reader Aids section at the end of this issue.


**3 CFR**

**Proclamations:**

8481 ..... 10631

**6 CFR**

5 ..... 10633

**7 CFR**

354 ..... 10634

**9 CFR**

53 ..... 10645
56 ..... 10645
145 ..... 10645
146 ..... 10645
147 ..... 10645

**10 CFR**

431 (2 documents) ..... 10874, 10950

**14 CFR**

39 (4 documents) ..... 10658, 10664, 10667, 10669

**Proposed Rules:**

39 (3 documents) ..... 10694, 10696, 10701

**15 CFR**

**Proposed Rules:**

801 ..... 10704

**16 CFR**

**Proposed Rules:**

322 ..... 10707

**21 CFR**

1301 ..... 10671
1303 ..... 10671
1304 ..... 10671
1307 ..... 10671
1308 ..... 10671
1309 ..... 10671
1310 ..... 10671
1312 ..... 10671
1313 ..... 10671
1314 ..... 10671
1315 ..... 10671
1316 ..... 10671
1321 ..... 10671

**29 CFR**

**Proposed Rules:**

1904 ..... 10738
1910 ..... 10739

**33 CFR**

165 ..... 10687
401 ..... 10688

**40 CFR**

52 ..... 10690

**47 CFR**

73 ..... 10692
80 ..... 10692

**49 CFR**

172 ..... 10974

**Proposed Rules:**

575 ..... 10740

**50 CFR**

622 ..... 10693

Federal Register
Vol. 75, No. 45
Tuesday, March 9, 2010

# Presidential Documents

**Title 3—**

**The President**

**Proclamation 8481 of March 2, 2010**

## Women's History Month, 2010

**By the President of the United States of America**

**A Proclamation**

Countless women have steered the course of our history, and their stories are ones of steadfast determination. From reaching for the ballot box to breaking barriers on athletic fields and battlefields, American women have stood resolute in the face of adversity and overcome obstacles to realize their full measure of success. Women's History Month is an opportunity for us to recognize the contributions women have made to our Nation, and to honor those who blazed trails for women's empowerment and equality.

Women from all walks of life have improved their communities and our Nation. Sylvia Mendez and her family stood up for her right to an education and catalyzed the desegregation of our schools. Starting as a caseworker in city government, Dr. Dorothy Height has dedicated her life to building a more just society. One of our young heroes, Caroline Moore, contributed to advances in astronomy by discovering a supernova at age 14.

When women like these reach their potential, our country as a whole prospers. That is the duty of our Government—not to guarantee success, but to ensure all Americans can achieve it. My Administration is working to fulfill this promise with initiatives like the White House Council on Women and Girls, which promotes the importance of taking women and girls into account in Federal policies and programs. This council is committed to ensuring our Government does all it can to give our daughters the chance to achieve their dreams.

As we move forward, we must correct persisting inequalities. Women comprise over 50 percent of our population but hold fewer than 17 percent of our congressional seats. More than half our college students are female, yet when they graduate, their male classmates still receive higher pay on average for the same work. Women also hold disproportionately fewer science and engineering jobs. That is why my Administration launched our Educate to Innovate campaign, which will inspire young people from all backgrounds to drive America to the forefront of science, technology, engineering, and math. By increasing women's participation in these fields, we will foster a new generation of innovators to follow in the footsteps of the three American women selected as 2009 Nobel Laureates.

Our Nation's commitment to women's rights must not end at our own borders, and my Administration is making global women's empowerment a core pillar of our foreign policy. My Administration created the first Office for Global Women's Issues and appointed an Ambassador at Large to head it. We are working with the United Nations and other international institutions to support women's equality and to curtail violence against women and girls, especially in situations of war and conflict. We are partnering internationally to improve women's welfare through targeted investments in agriculture, nutrition, and health, as well as programs that empower women to contribute to economic and social progress in their communities. And we are following through on the commitments I made in Cairo to promote access to education, improve literacy, and expand employment opportunities for women and girls.

This month, let us carry forth the legacy of our mothers and grandmothers. As we honor the women who have shaped our Nation, we must remember that we are tasked with writing the next chapter of women's history. Only if we teach our daughters that no obstacle is too great for them, that no ceiling can block their ascent, will we inspire them to reach for their highest aspirations and achieve true equality.

NOW, THEREFORE, I, BARACK OBAMA, President of the United States of America, by virtue of the authority vested in me by the Constitution and the laws of the United States, do hereby proclaim March 2010 as Women's History Month. I call upon all our citizens to observe this month with appropriate programs, ceremonies, and activities that honor the history, accomplishments, and contributions of American women.

IN WITNESS WHEREOF, I have hereunto set my hand this second day of March, in the year of our Lord two thousand ten, and of the Independence of the United States of America the two hundred and thirty-fourth.

[FR Doc. 2010–5108
Filed 3–8–10; 8:45 am]
Billing code 3195–W0–P

# Rules and Regulations

Federal Register

Vol. 75, No. 45

Tuesday, March 9, 2010

This section of the FEDERAL REGISTER contains regulatory documents having general applicability and legal effect, most of which are keyed to and codified in the Code of Federal Regulations, which is published under 50 titles pursuant to 44 U.S.C. 1510.

The Code of Federal Regulations is sold by the Superintendent of Documents. Prices of new books are listed in the first FEDERAL REGISTER issue of each week.

## DEPARTMENT OF HOMELAND SECURITY

### Office of the Secretary

### 6 CFR Part 5

**[Docket No. DHS–2009–0415]**

## Privacy Act of 1974: Implementation of Exemptions; Department of Homeland Security United States Immigration and Customs Enforcement—011 Immigration and Enforcement Operational Records System of Records

**AGENCY:** Privacy Office, DHS.

**ACTION:** Final rule.

**SUMMARY:** The Department of Homeland Security is issuing a final rule to amend its regulations to exempt portions of a Department of Homeland Security/U.S. Immigration and Customs Enforcement system of records titled, "Department of Homeland Security/U.S. Immigration and Customs Enforcement—011 Removable Alien Records System of Records" renamed "Department of Homeland Security/U.S. Immigration and Customs Enforcement—011 Immigration and Enforcement Operational Records System of Records" from certain provisions of the Privacy Act. Specifically, the Department exempts portions of the Department of Homeland Security/U.S. Immigration and Customs Enforcement—011 Immigration and Enforcement Operational Records system from one or more provisions of the Privacy Act because of criminal, civil, and administrative enforcement requirements.

**DATES:** *Effective Date:* This final rule is effective March 9, 2010.

**FOR FURTHER INFORMATION CONTACT:** For general questions please contact: Lyn Rahilly (202–732–3300), Privacy Officer, U.S. Immigration and Customs Enforcement, 500 12th Street, SW., Washington, DC 20536; e-mail: *ICEPrivacy@dhs.gov.* For privacy issues please contact: Mary Ellen Callahan (703–235–0780), Chief Privacy Officer, Privacy Office, U.S. Department of Homeland Security, Washington, DC 20528.

**SUPPLEMENTARY INFORMATION:**

### Background

The Department of Homeland Security (DHS) published a notice of proposed rulemaking in the **Federal Register**, 74 FR 30240, June 25, 2009, proposing to exempt portions of the system of records from one or more provisions of the Privacy Act because of criminal, civil, and administrative enforcement requirements. The DHS/U.S. Immigration and Customs Enforcement (ICE)—011 Removable Alien Records system of records notice was published concurrently in the **Federal Register**, 74 FR 5665, January 30, 2009, and later updated in the **Federal Register** to add two new routine uses, 74 FR 20719, May 5, 2009. The system is being renamed DHS/ICE—011 Immigration and Enforcement Operational Records system of records. Comments were invited on both the notice of proposed rulemaking and system of records notice. Three comments were received on the notice of proposed rulemaking and system of records notice.

### Public Comments

The comment received on the notice of proposed rulemaking did not pertain to the notice of proposed rulemaking or system of records notice, but instead expressed the commenter's general views on immigration. DHS/ICE received two positive comments on the system of records notice expressing support for the two new routine uses added in the updated system of records notice. DHS will implement the rulemaking as proposed.

### List of Subjects in 6 CFR Part 5

Freedom of information; Privacy.

■ For the reasons stated in the preamble, DHS amends Chapter I of Title 6, Code of Federal Regulations, as follows:

## PART 5—DISCLOSURE OF RECORDS AND INFORMATION

■ 1. The authority citation for Part 5 continues to read as follows:

**Authority:** Pub. L. 107–296, 116 Stat. 2135, 6 U.S.C. 101 et seq.; 5 U.S.C. 301. Subpart A also issued under 5 U.S.C. 552. Subpart B also issued under 5 U.S.C. 552a.

■ 2. Add at the end of Appendix C to Part 5, the following new paragraph "48" to read as follows:

### Appendix C to Part 5—DHS Systems of Records Exempt From the Privacy Act

* * * * *

48. The DHS/ICE–011 Immigration and Enforcement Operational Records system of records consists of electronic and paper records and will be used by DHS and its components. The DHS/ICE–011 Immigration and Enforcement Operational Records system of records is a repository of information held by DHS in connection with its several and varied missions and functions, including, but not limited to: The enforcement of civil and criminal laws; investigations, inquiries, and proceedings there under; and national security and intelligence activities. The DHS/ICE–011 Immigration and Enforcement Operational Records system of records contains information that is collected by, on behalf of, in support of, or in cooperation with DHS and its components and may contain personally identifiable information collected by other federal, state, local, tribal, foreign, or international government agencies. The Secretary of Homeland Security has exempted this system from the following provisions of the Privacy Act, subject to the limitations set forth in 5 U.S.C. 552a(c)(3) and (4); (d); (e)(1), (e)(2), (e)(3), (e)(4)(G), (e)(4)(H), (e)(5), and (e)(8); (f); and (g) pursuant to 5 U.S.C. 552a(j)(2). Additionally, the Secretary of Homeland Security has exempted this system from the following provisions of the Privacy Act, subject to the limitations set forth in 5 U.S.C. 552a(c)(3); (d); (e)(1), (e)(4)(G), (e)(4)(H); and (f) pursuant to 5 U.S.C. 552a(k)(2). Exemptions from these particular subsections are justified, on a case-by-case basis to be determined at the time a request is made, for the following reasons:

(a) From subsection (c)(3) and (4) (Accounting for Disclosures) because release of the accounting of disclosures could alert the subject of an investigation of an actual or potential criminal, civil, or regulatory violation to the existence of the investigation, and reveal investigative interest on the part of DHS as well as the recipient agency. Disclosure of the accounting would therefore present a serious impediment to law enforcement efforts and/or efforts to preserve national security. Disclosure of the accounting would also permit the individual who is the subject of a record to impede the investigation, to tamper with witnesses or evidence, and to avoid detection or apprehension, which would undermine the entire investigative process.

(b) From subsection (d) (Access to Records) because access to the records contained in

this system of records could inform the subject of an investigation of an actual or potential criminal, civil, or regulatory violation, to the existence of the investigation, and reveal investigative interest on the part of DHS or another agency. Access to the records could permit the individual who is the subject of a record to impede the investigation, to tamper with witnesses or evidence, and to avoid detection or apprehension. Amendment of the records could interfere with ongoing investigations and law enforcement activities and would impose an impossible administrative burden by requiring investigations to be continuously reinvestigated. In addition, permitting access and amendment to such information could disclose security-sensitive information that could be detrimental to homeland security.

(c) From subsection (e)(1) (Relevancy and Necessity of Information) because in the course of investigations into potential violations of Federal law, the accuracy of information obtained or introduced occasionally may be unclear or the information may not be strictly relevant or necessary to a specific investigation. In the interests of effective law enforcement, it is appropriate to retain all information that may aid in establishing patterns of unlawful activity.

(d) From subsection (e)(2) (Collection of Information from Individuals) because requiring that information be collected from the subject of an investigation would alert the subject to the nature or existence of an investigation, thereby interfering with the related investigation and law enforcement activities.

(e) From subsection (e)(3) (Notice to Subjects) because providing such detailed information would impede law enforcement in that it could compromise investigations by: Revealing the existence of an otherwise confidential investigation and thereby provide an opportunity for the subject of an investigation to conceal evidence, alter patterns of behavior, or take other actions that could thwart investigative efforts; reveal the identity of witnesses in investigations, thereby providing an opportunity for the subjects of the investigations or others to harass, intimidate, or otherwise interfere with the collection of evidence or other information from such witnesses; or reveal the identity of confidential informants, which would negatively affect the informant's usefulness in any ongoing or future investigations and discourage members of the public from cooperating as confidential informants in any future investigations.

(f) From subsections (e)(4)(G) and (H) (Agency Requirements), and (f) (Agency Rules) because portions of this system are exempt from the individual access provisions of subsection (d) for the reasons noted above, and therefore DHS is not required to establish requirements, rules, or procedures with respect to such access. Providing notice to individuals with respect to existence of records pertaining to them in the system of records or otherwise setting up procedures pursuant to which individuals may access and view records pertaining to themselves in the system would undermine investigative efforts and reveal the identities of witnesses, and potential witnesses, and confidential informants.

(g) From subsection (e)(5) (Collection of Information) because in the collection of information for law enforcement purposes it is impossible to determine in advance what information is accurate, relevant, timely, and complete. Compliance with (e)(5) would preclude DHS agents from using their investigative training and exercise of good judgment to both conduct and report on investigations.

(h) From subsection (e)(8) (Notice on Individuals) because compliance would interfere with DHS' ability to obtain, serve, and issue subpoenas, warrants, and other law enforcement mechanisms that may be filed under seal, and could result in disclosure of investigative techniques, procedures, and evidence.

(i) From subsection (g) to the extent that the system is exempt from other specific subsections of the Privacy Act relating to individuals' rights to access and amend their records contained in the system. Therefore DHS is not required to establish rules or procedures pursuant to which individuals may seek a civil remedy for the agency's: Refusal to amend a record; refusal to comply with a request for access to records; failure to maintain accurate, relevant timely and complete records; or failure to otherwise comply with an individual's right to access or amend records.

Dated: February 5, 2010.

**Mary Ellen Callahan,**

*Chief Privacy Officer, Department of Homeland Security.*

[FR Doc. 2010–4900 Filed 3–8–10; 8:45 am]

**BILLING CODE 9111–28–P**

## DEPARTMENT OF AGRICULTURE

### Animal and Plant Health Inspection Service

### 7 CFR Part 354

**[Docket No. APHIS–2006–0096]**

**RIN 0579–AC06**

### Agricultural Inspection and AQI User Fees Along the U.S./Canada Border

**AGENCY:** Animal and Plant Health Inspection Service, USDA.

**ACTION:** Final rule.

**SUMMARY:** We are adopting as a final rule, with changes, an interim rule that amended the foreign quarantine and user fee regulations by removing the exemptions from inspection for imported fruits and vegetables grown in Canada and the exemptions from user fees for commercial vessels, commercial trucks, commercial railroad cars, commercial aircraft, and international air passengers entering the United States from Canada. The interim rule was necessary in part because we were not recovering the costs of the inspection activities we were engaged in at the U.S./Canada border. In addition, our data showed an increasing number of interceptions on the U.S./Canada border of prohibited material that originated in Canada and countries other than Canada that presents a high risk of introducing plant pests or animal diseases into the United States. These findings, combined with additional Canadian airport preclearance data on interceptions of ineligible agricultural products approaching the U.S. border from Canada, strongly indicated that we needed to expand and strengthen our pest exclusion and smuggling interdiction efforts at that border. As a result of the interim rule, all agricultural products imported from Canada are subject to inspection, and all commercial conveyances, with certain exceptions established by this final rule, as well as airline passengers arriving on flights from Canada, are subject to user fees.

**DATES:** *Effective Date:* March 9, 2010.

**FOR FURTHER INFORMATION CONTACT:** Ms. Cynthia Stahl, Senior Staff Officer, Quarantine Policy, Analysis and Support, PPQ, APHIS, 4700 River Road Unit 60, Riverdale, MD 20737; (301) 734–8415.

**SUPPLEMENTARY INFORMATION:**

### Background

The regulations in 7 CFR part 319 prohibit or restrict the importation of certain plants and plant products into the United States to prevent the introduction of plant pests. Similarly, the regulations in 9 CFR subchapter D prohibit or restrict the importation of certain animals and animal products into the United States to prevent the introduction of pests or diseases of livestock. The regulations in 7 CFR part 354 provide rates and requirements for overtime services relating to imports and exports and for user fees.

In an interim rule[1] effective November 24, 2006, and published in the **Federal Register** on August 25, 2006 (71 FR 50320–50328, Docket APHIS–2006–0096), we amended the foreign quarantine regulations in part 319 and the user fee regulations in part 354 by removing the exemptions from inspection for imported fruits and vegetables grown in Canada and the exemptions from user fees for commercial vessels, commercial trucks,

[1] To view the interim rule and the comments we received, go to *http://www.regulations.gov/fdmspublic/component/main?main=DocketDetail&d=APHIS-2006-0096.*

commercial railroad cars, commercial aircraft, and international air passengers entering the United States from Canada. As a result of the interim rule, all agricultural products imported from Canada are subject to inspection, and commercial conveyances, as well as airline passengers arriving on flights from Canada, are subject to inspection and user fees. We took that action in part because we were not recovering the costs of our inspection activities at the U.S./Canada border. In addition, our data showed an increasing number of interceptions on the U.S./Canada border of prohibited material that originated in Canada and countries other than Canada that presents a high risk of introducing plant pests or animal diseases into the United States. These findings, combined with additional Canadian airport preclearance data on interceptions of ineligible agricultural products approaching the U.S. border from Canada, strongly indicated that we needed to expand and strengthen our pest exclusion and smuggling interdiction efforts at that border.

On November 22, 2006, we published in the **Federal Register** (71 FR 67436) a notice delaying the effective date for the changes affecting user fees for international air passengers until January 1, 2007, and all other user fee-related provisions of the rule until March 1, 2007. We published a subsequent notice on February 26, 2007 (72 FR 8261), that further delayed the effective date for user fees for commercial trucks and loaded railroad cars entering the United States from Canada until June 1, 2007. These delays of effective date did not extend the comment period for the interim rule.

We solicited comments on the interim rule for 90 days ending November 24, 2006. We received 112 comments by that date. They were from private citizens; industry groups; representatives of the Canadian Government and Canadian State governments; individual shipping, manufacturing, and food processing companies; trade groups; representatives of trucking, airline, railroad, and vessel companies; State governments; and representatives of Federal and State agencies.

Eleven commenters supported the interim rule. The remaining commenters expressed concerns with the interim rule. The issues raised by those commenters are discussed below by topic.

*Border Delays*

Many commenters expressed concern that the interim rule would cause border delays due to congestion resulting from increased inspections, which in turn would heavily tax existing infrastructure. Delays were a particular concern for those entities shipping perishable items such as food products, and for express carriers and companies with strict shipping schedules. Some commenters stated that delays at the U.S./Canada border could have an effect on products shipped through the United States to Mexico or that they could lead to increased fuel costs or job losses. One commenter expressed concern regarding delays as a result of insufficient numbers of the Animal and Plant Health Inspection Service (APHIS) employees to conduct inspections.

Although APHIS retains the authority to establish and collect agricultural quarantine and inspection (AQI) user fees, the Homeland Security Act of 2002 (Pub. L. 107–296), which established the Department of Homeland Security (DHS), transferred the responsibility for inspecting imported agricultural products from APHIS to DHS' Bureau of Customs and Border Protection (CBP). Prior to the effective date of the interim rule, CBP was already conducting inspections of APHIS-regulated products at the U.S./Canada border with the exception of Canadian-origin fruits and vegetables; the interim rule did not create a new inspection function. Among other things, the collection of user fees at the Canadian border has already allowed CBP to hire additional inspectors to offset any potential staffing shortages as a result of the increased inspections of Canadian-grown fruits and vegetables required by the interim rule. Since implementation of the interim rule, we are not aware of any increase in delays at U.S./Canada border ports as a result of the rule.

Border delays can be affected by a variety of factors; in addition to the inspections of fruits and vegetables that are necessary as a result of the rule, the past 3 years have seen the implementation of new national security initiatives such as the passport requirement for all citizens reentering the United States from Canada and the commencement of infrastructure improvement projects at several land border crossings on the U.S./Canada border. While we cannot unequivocally state that there have been no additional delays that can be attributed to the interim rule, the fact that CBP was already conducting inspections of conveyances at the U.S./Canada border prior to the interim rule's implementation makes it unlikely that the interim rule has resulted in the delays or other issues cited by the commenters. CBP monitors the flow of traffic across the Canadian border through ports of entry and will take action to help alleviate future border delays.

Several commenters stated that requiring cash payments at border crossings would also increase border delays because rail and truck crossings are not set up to handle cash payments and because such payments would require having to make change. Many commenters also stated that requiring cash payments renders current programs designed to reduce wait times by allowing the use of pre-paid decals or other means useless.

Because CBP has been collecting customs user fees all along, the user fee collection infrastructure is already in place. AQI user fee payments for importers who move their products by rail are submitted directly to APHIS after-the-fact, therefore there are no user fee collections or resulting delays at rail crossings due to the need to handle cash payments. In addition, as stated in the interim rule, importers who frequently cross the border by truck will benefit from the purchase of a transponder that is good for a calendar year of unlimited border crossings. Over 80 percent of all importers who cross the border by truck are already benefitting from this provision. The remaining importers who must pay the per-entry user fees will be able to pay them at the same time they pay CBP fees. However, as noted previously, since implementation of the interim rule resulting in the collection of AQI user fees and the conducting of additional inspections, we are not aware of any delays at the U.S./Canada border.

Several commenters asked how the 136 new agricultural inspectors that we expected to be hired as a result of the interim rule would be able to manage all border crossings 7 days a week and all 3 shifts during the day. One of those commenters stated that as most CBP personnel work from 8 a.m. to 4:30 p.m. and most agricultural products arrive in the United States overnight, this suggests that trucks will have to sit and wait for inspectors to arrive at work.

Since most border crossings are staffed by CBP agriculture inspectors from 8:30 a.m. to 4:30 p.m. on weekdays, the additional inspectors would not be expected to manage all U.S./Canada border crossings 7 days a week and 24 hours a day. As noted by one of the commenters, trucks arriving after these hours will most likely have to wait until the following business day when inspections resume. However, most border port offices did not have agriculture inspectors available 7 days a week and 24 hours a day before the implementation of the interim rule. Therefore, waiting at the border already

occurred for trucks arriving before or after these hours. As stated previously, since implementation of the interim rule, we are not aware of any delays at the U.S./Canada border as a result of the interim rule, including any delays of this nature.

Two commenters asked over what timeframe the 136 inspectors would be hired. One commenter asked what will happen in the interim before full staffing is reached.

The staffing plan in the interim rule was developed in 2001 before the transfer of inspection duties from APHIS to CBP. CBP staffs all ports according to current and anticipated needs. We are in consultation with CBP regarding their staffing plan and are providing recommendations to them regarding staffing issues. Training for these inspectors commenced in November 2006 and classes continue to be conducted. As of August 1, 2009, there were 181 CBP agricultural inspectors on the U.S./Canada border. The deployment of inspectors has been and will continue to be as quick as possible. In the interim, the number of inspections conducted will be dependent on the resources available. Inspections will also be conducted randomly. As the number of additional staff increases, the number of inspections will increase accordingly.

One commenter cited delays of up to 24 hours due to waiting for plant samples to be identified and stated that money from user fee collection should go to training inspectors in pest identification or should be spent on technology to better help identify samples.

We are continually working to improve our efficiency and cut costs, while carrying out our mission to protect U.S. agriculture from pest and disease outbreaks. This includes funding new technologies that may help expedite pest identification and hiring and training knowledgeable staff to assist with pest identification.

*Conducting Inspections*

Several commenters asked how inspections would be carried out and where they would be conducted.

Selective inspections will be conducted at U.S. ports of entry by CBP agriculture inspectors. They will be the same type of agriculture inspections currently conducted at our other ports of entry. The specific means of commercial conveyance to be inspected and the type of inspection provided at a port of entry are determined by APHIS and CBP risk analyses to target conveyances or host material that may carry agricultural pests. Additionally, CBP will conduct random inspections. As pathways continue to change, random inspections become increasingly necessary to monitor the flow of imports to ensure that agricultural pests are not entering the country via previously unknown means. This dynamic approach to pest interdiction is critical to the success of our programs.

*Definition of Commercial Vehicle*

Two commenters asked what the definition of a commercial vehicle is in the context of the rule.

We do not consider the term "commercial vehicle" to have any specialized meaning beyond its commonly understood meaning. Definitions for *commercial aircraft, commercial truck,* and *commercial vessel* may be found in § 354.3 of the user fee regulations.

*Private Vehicle, Train, and Bus Passengers*

Several commenters asked how other pathways not addressed by the rule, such as private vehicles and train and bus passengers, would be inspected.

Although the interim rule does not directly address the risk from private vehicles or train and bus passengers, these pathways have been subject to inspection based upon risk. The full economic analysis for this final rule includes a discussion of the inspection of passenger vehicles. Those inspections are funded by appropriated funds.

*Private Property and Businesses on the Border*

One commenter asked how carriers coming from a place sitting exactly on the border between the United States and Canada would be treated. Examples given were a pulp or sawmill.

Our AQI program is in place at designated ports of entry along the U.S./Canada border and not private properties along the border. Therefore, a carrier coming from a place sitting exactly on the border, such as a pulp or sawmill, would be treated like any other carrier and could be directed to one of these ports.

*Empty Containers and Movement of Nonagricultural Goods*

Many of the commenters stated that particular products that are not agricultural goods or conveyances that are not involved in the movement of agricultural goods should be exempt from paying agricultural user fees because they do not present a risk of introducing plant pests into the United States. Other commenters pointed to the hazardous nature of some nonagricultural commodities or other difficulties inherent in inspecting certain nonagricultural commodities or conveyances. Several commenters asked how empty conveyances would be dealt with or stated that they should also be exempt from the user fees.

Risks to agricultural and natural resources can arise from shipments of nonagricultural goods and from conveyances moving nonagricultural goods. An example given in the interim rule was wood packaging material, such as wooden pallets, which is used to ship nonagricultural products such as electronic items. Wood packaging material can carry pests such as wood-boring insects. Noxious weed seeds, gypsy moths, and other hitchhiking pests that can attach themselves to nonagricultural items as well as the vehicle itself also pose a concern. In addition, prohibited soil may be attached to the articles in a shipment or to the conveyance itself. If the conveyance has traveled through, or if the conveyance or shipment has originated in, an area of Canada quarantined or regulated for plant pests such as nematodes, these agricultural pests may be carried into the United States in soil. Therefore, it is appropriate that all conveyances be subject to the requirements described in the interim rule except as otherwise noted. These same requirements have been in place along the U.S./Mexico border for the past 18 years. With the publication of the interim rule, conveyances entering the United States from all foreign countries are subject to the same AQI user fees.

*Commercial Trucks and Railroad Cars—Exempt Movement That Originates and Ends in Canada*

Several commenters stated that a railroad car or truck that originates and terminates in the United States and that does not load or unload cargo in Canada or that originates and terminates in Canada and that does not load or unload cargo in the United States should be exempt from paying the user fees.

The current regulations already exempt from AQI user fees those commercial railroad cars that are part of a train that originates and terminates in the United States and no passengers board or disembark and no cargo is loaded or unloaded while the train is in a foreign country. We recognize that there is a similar risk profile for commercial railroad cars that are part of a train that originates and terminates in Canada and no passengers board or disembark and no cargo is loaded or unloaded while the train is in the United States. Therefore, we have

amended the regulations in this final rule to state that such movements are also exempt from the AQI user fee. However, we do not agree that a similar exemption from the AQI user fee should be granted to trucks that originate and terminate in the United States and do not load or unload cargo in Canada or that originate and terminate in Canada and do not load or unload cargo in the United States. This is because, unlike railroad cars, trucks are not bound to a fixed track where stops and loading or unloading may only feasibly occur at designated stations. Therefore, the risk is high that cargo may be loaded or unloaded at any point.

*Vessels That Travel to Canada To Refuel*

One commenter stated that vessels that travel to Canada only to refuel should be exempt from paying an AQI user fee upon their return to the United States.

We agree with the commenter. Although U.S.-origin vessels that travel to Canada to take on fuel are not currently exempt from paying an AQI user fee when they return to the United States, we note that Canadian-origin vessels that travel to the United States solely to take on fuel are exempt from paying an AQI user fee. Because we recognize that there is a similar risk profile for U.S. vessels returning from Canada if they have only traveled to Canada to take on fuel, we have amended the regulations in this final rule to state that such movements are also exempt from the AQI user fee.

*Small Aircraft*

Several commenters stated that the user fee exemption should be extended to apply to aircraft that are not currently exempt due to their size or because they contain more than the maximum number of seats to qualify for a user fee exemption, because such planes carry little cargo.

Currently, all passenger aircraft, originating in any country, that have 64 or fewer seats and that are not carrying certain regulated articles specified in § 354.3(e)(2)(iv) are exempt from paying the aircraft AQI user fee. The interim rule and this final rule are focused on AQI user fees for conveyances and air passengers from Canada. Any new AQI user fee exemptions that could impact passengers or conveyances originating from countries around the world, such as the exemption suggested by the commenters, would have to be addressed in a separate rulemaking.

*Barges*

Several commenters stated that the user fee exemption should be extended to apply to barges that are not currently exempt due to their size, but that carry little cargo.

We note that ferries, which are not considered to be commercial vessels, and commercial vessels weighing less than 100 net tons are already exempt from paying AQI user fees. While we do not agree that additional exemptions should be given to barges because of their size, we do recognize that barges traveling solely between the United States and Canada are operating in a lower-risk environment: A limited range of waterways between and around the U.S./Canada border such as the Puget Sound and the Great Lakes, which means that such barges present a much lower risk of carrying cargo or hitchhiking pests from a third country. Because of the risk of ocean-going barges traveling to countries outside of the United States and Canada, we have restricted our definition of *barge* to a non self-propelled vessel that transports cargo that is not contained in shipping containers. This definition does not include integrated tug-barge combinations. Further, we are limiting the exemption to barges that carry bulk cargo that originates only in the United States or Canada and that do not carry any plants or plant products or animals or animal products, and that do not carry soil or quarry products from areas in Canada listed in § 319.77–3 as being infested with gypsy moth. Therefore, we are amending the regulations to exempt barges that meet the above conditions from paying the AQI user fee.

*Participation in Trade Security Systems*

Several commenters expressed concern that the interim rule removes the benefits of complying with systems such as the Customs-Trade Partnership against Terrorism (C–TPAT) and suggested that those in the trade community who participate in such programs should be waived from having to comply with the provisions of the interim rule.

C–TPAT does not have an agricultural component that specifically addresses sanitary or phytosanitary risks. C–TPAT members' shipments are subject to agricultural inspection regardless of the reduced inspection benefits granted by membership in the program. Therefore, we do not believe it is appropriate to exempt C–TPAT members from being required to pay the AQI user fee.

*Transition to Full Staffing and Inspection Levels*

Several commenters expressed concern that the collection of user fees does not mean any additional inspections will be conducted and therefore, stated the user fees are not justified. Some of the commenters expressed concern that the fees for one type of conveyance would be used to subsidize inspections on another type of conveyance because of what the commenters perceived as an apparent disparity in user fees charged between different conveyances or an apparent disparity in the inspection cost projections between different conveyances. Several commenters on the interim rule expressed concern regarding the cost projection for the initial staffing plan: 65 airport pre-clearance inspectors in Canada, costing $46 million, and 136 inspectors along the U.S./Canada border, costing $22.45 million.

As stated previously, the staffing plan in the interim rule was developed in 2001 before the transfer of inspection duties from APHIS to CBP. We are in consultation with CBP regarding their staffing plan and are providing recommendations to them regarding staffing issues. Inspections will be fewer and more random until the transition to full staffing occurs, but from then on will be conducted on a greater number of conveyances and agricultural products. The apparent disparity in user fees or the cost of inspections between different conveyance types is due to various factors, including the time and staff needed to conduct the inspections as well as the costs associated with staffing inspectors in Canada versus inspectors in the United States. Any excess of collections over costs remains available from year to year in a dedicated reserve account to be used only to fund agricultural quarantine inspection and related program costs. We take into account the balance in this reserve account, along with our current user fees, volumes, and collections before increasing or decreasing user fees.

*User Fee Costs*

The majority of commenters stated that the cost of the user fees is excessive. Several commenters expressed concern regarding how APHIS arrived at the current user fees. One commenter asked how APHIS could have set user fees in 2004 that will be in effect until 2010 when APHIS does not know what costs will be in 2010.

As stated previously, the interim rule was designed, in part, to recover the costs of our current inspection activities at the U.S./Canada border. APHIS has the authority to collect user fees to fund inspections. Until recently, APHIS had determined that increased inspections at the Canadian border were not necessary. However, due to evidence of increased pest risk, APHIS believes it is necessary to increase its inspection regime at the Canadian border and therefore must collect user fees to fund those inspections. Therefore, we are requiring that commercial conveyances from Canada and international airline passengers arriving on flights from Canada be subject to the same agricultural quarantine user fees that are already charged to commercial conveyances and international airline passengers arriving in the United States from all other foreign countries. To calculate the proposed user fees, we projected the direct costs of providing all AQI services in fiscal years (FY) 2004 through 2010 (and beyond) for international airline passengers and for each category of conveyance: Commercial vessels, commercial trucks, commercial railroad cars, and commercial aircraft. The cost of providing these services in prior FYs served as a basis for calculating our projected costs. We then projected our costs using economic factors provided to us in the economic schedules in the President's budget. In publishing our user fees in advance, we are acting on behalf of affected industries who suggested that they would be able to plan for the effects of fee changes more effectively if fees were set in advance. To the extent that costs of inspections and collections of user fees change, we retain the option of increasing or reducing any of the fees.

*Taxes Versus User Fees*

Some commenters expressed concern that the user fees will serve as a new tax on cross-border commerce or stated that Government funding should be obtained to hire additional permanent inspectors and acquire other needed resources rather than increasing user fees, or that appropriations have already addressed the need for additional inspectors.

A tax is money paid by the general public to support general Government operations. A user fee is money paid for a specific Government service by the beneficiary of that service and is designed to recover the costs of providing that service. The AQI user fees covered by the interim rule are intended to recover the costs of providing AQI services for commercial vessels, commercial trucks, loaded commercial railroad cars, commercial aircraft, and international airline passengers and are paid by commercial vessel companies, commercial truck drivers, commercial railroad companies, commercial airlines, and international airline passengers. As such, our AQI user fees are user fees and not taxes. We have congressional authority to collect these fees. The Food, Agriculture, Conservation, and Trade (FACT) Act of 1990, as amended, authorizes the Secretary of Agriculture to prescribe and collect fees to cover the cost of providing the AQI services covered by the interim rule. Although appropriations may be used to partially fund certain related aspects of the AQI program, the FACT Act mandates that the majority of the cost must be borne by the beneficiaries of the program's services.

*Canadian Costs and Fees*

Two commenters expressed concern that the interim rule would cause Canada to retaliate by imposing user fees on all conveyances crossing the border into Canada regardless of whether inspections will be carried out.

Although we understand the commenter's concern, Canada's actions are not under our control. The interim rule was implemented to address the increased pest risk presented by agricultural shipments and conveyances from Canada and to provide for full cost recovery of our AQI program. The conveyances entering the United States from Canada are not only Canadian-owned; all conveyances, including U.S.-owned conveyances, are impacted by this rule. Also, we note that the user fees have been in effect since 2007. Since that time, there have been no signs of retaliation by Canada.

*Inspection Costs*

Several commenters stated that APHIS does not know what the costs of performing inspections are and, therefore, asked how APHIS can comply with the statutory mandate in 21 U.S.C. 136a(a)(2) that fees must be commensurate with the costs of inspections. One commenter expressed concern that the interim rule did not contain provisions for the adjustment of fees if necessary.

The user fees implemented at the U.S./Canada border as a result of the interim rule are the same as those already in place at our other border ports. Those user fees were determined by dividing the sum of the costs of providing each service by the projected number of users subject to inspection, thereby arriving at "raw" fees. We then rounded the raw fees up to determine the user fees. We consider this approach adequate in our identification of the costs of inspection and related pest identification and mitigation activities. As APHIS assesses its user fees, volumes, collections, and ongoing reserve balances, it will initiate rulemaking to increase or decrease the fees as necessary. We review our fees on a biennial basis to ensure that the fees charged are commensurate with the costs of inspection and inspection-related activities and, if necessary, undertake rulemaking to amend them. We will adjust a fee up or down, as appropriate, depending on the actual cost of providing services. In most cases, we propose user fee increases so that the fees will keep up with inflationary costs as well as any new costs that must be paid. However, we have adjusted user fees downward in the past. In a final rule published in the **Federal Register** on January 19, 1996, (61 FR 2660–2665 Docket No. 94–074–2) and effective on March 1, 1996, we decreased our AQI user fee for commercial aircraft by 13.1 percent after our cost analysis revealed that this fee was too high.

*Decals*

Several commenters expressed concern regarding the provision for annual decals. One commenter stated that if the option to purchase an annual decal is available for trucks that it should also be extended to all other conveyances. Two commenters questioned the economic feasibility of an annual decal for some importers because they do not cross the border enough times to justify the cost of the decal or because the decal is vehicle-specific.

Although currently there is not an option to purchase an annual decal for loaded railroad car and commercial vessel border crossings, the regulations do contain maximum charge provisions. For commercial vessels, the maximum user fee is 15 times the AQI user fee per arrival. For loaded railroad cars, the maximum user fee is 20 times the AQI user fee per arrival. The maximum charge provisions provide the same benefits to users as a decal in instances where issuing a decal may not be feasible due to difficulty in electronically reading the decal on a particular type of conveyance or how user fees are collected for a particular conveyance.

*Air Industry—Two AQI User Fees*

One commenter asked why air transport is subject to two fees (cargo and passenger) when other modes of transport are only subject to cargo fees. The commenter also asked why all

aircraft are subject to the same aircraft fee, regardless of whether they are cargo or passenger aircraft.

Except as otherwise noted, the fees charged to commercial conveyances from Canada and international airline passengers arriving on flights from Canada are the same fees already charged to commercial conveyances and international airline passengers arriving in the United States from all other foreign countries. As mentioned previously, all passenger aircraft originating in any country with 64 or fewer seats and that do not carry certain regulated articles are already exempt from paying the aircraft AQI user fee. The passenger fee pays the costs of inspecting passengers and passenger baggage, the aircraft galley including garbage, the passenger compartment and the baggage hold, while the commercial aircraft fee pays the costs of inspecting the aircraft, excluding the areas covered under the passenger fee, and the crew and cargo.

*Legality*

Many commenters stated that the interim rule is contrary to bilateral efforts and political commitments between the United States and Canada or broader international agreements and serves to undermine them.

APHIS has been in discussions with Canadian officials for many years regarding agricultural risk from agricultural products, commercial conveyances, and air passengers arriving in the United States from Canada. We have also established workgroups with Canada to discuss enhancements within their agricultural programs to complement the U.S. pest interdiction and prevention programs. When the original user fee rules were implemented and the exemption for Canadian conveyances made, we considered commercial conveyances and agricultural shipments from Canada to have a risk profile similar to that of products and conveyances from the United States.[2] As a result of this assumption, few inspections were conducted at the Canadian border, However, recent trends have shown that this assumption about risk is no longer true and inspections have increased accordingly. Therefore, in order to recover the costs of the existing inspection program and to implement an expanded inspection program, we determined the removal of the inspection and user fee exemption was necessary.

[2] See the rule published in the **Federal Register** (56 FR 8148–8156) on February 27, 1991.

*Basis of the Rule*

Several commenters questioned the basis of the rule, asking for risk assessments, pest survey data, or other information to support the rulemaking.

Our decision to implement the interim rule was based on the fact that we were conducting inspections on the U.S./Canada border during which we were detecting exotic and dangerous pests, and were not recovering the costs of these inspections. For example, U.S. inspectors have intercepted fruit flies on mangoes from Mexico and Morocco, longans and litchis from various Asian countries, citrus from Spain, *Spondia* spp. from Mexico, *Acanthocereus* spp. from China, and *Musa* spp. from India that were shipped from those countries to the United States via Canada. In each case, the material was from a country other than Canada and was re-labeled as a product of Canada and then shipped to the United States to take advantage of the exemption from AQI user fees for Canadian fruits and vegetables. Therefore, we determined that the inspection exemption for fruits and vegetables from Canada needed to be removed to allow for regular inspections at the border and that AQI user fees were needed to recover the costs of our ongoing inspection activities. We provide more examples/data in our Final Regulatory Flexibility Analysis that illustrate the risks associated with material imported from Canada that originated in Canada and countries other than Canada. We reiterate that the interim rule merely subjected users entering the United States from Canada to the same user fees that are already being charged to users entering from all other countries.

*Emergency Rulemaking*

Many commenters expressed concerns regarding the use of emergency rulemaking rather than engaging in talks with interested entities and that the interim rule's comment period ended on the same day as its implementation. Several commenters stated that the delay in implementing the rule illustrates that the rule was not justified as an emergency action.

APHIS has been in discussions with Canadian officials for many years regarding the risk from agricultural shipments and commercial conveyances from Canada. We value our relationship with our Canadian partners, and we continue to communicate with our partners regarding how best to improve mitigation activities as well as to determine where harmonization of regulatory actions between the United States and Canada may be appropriate. Because the interim rule removed the inspection exemption for imported fruits and vegetables grown in Canada and commercial conveyances from Canada in order to prevent the introduction of plant pests and animal diseases into the United States and removed the user fee exemption for Canada in order to recover the costs of the needed inspections, we found good cause to publish the rule without a prior proposal. However, affected industries and the general public did have an opportunity to comment on the interim rule following its publication. The effective date of the interim rule was delayed in response to strong industry requests for more time to prepare for the implementation of the AQI user fees and to allow time to coordinate the additional inspections and collection of fees with CBP.

One of the difficulties in mitigating the risk of plant pests entering the United States is ensuring that loaded or unloaded railroad cars and trucks that previously carried shipments of non-Canadian origin (i.e., third country origin) cargo are not infested with pests at the time they enter the United States. After the interim rule was published, APHIS met on several occasions with individual companies and industry groups that operate across the land border to discuss agricultural risks associated with rail and truck supply systems. In particular, we hoped to obtain further information regarding the use of containers which previously hauled high risk non-Canadian products. However, we were unable to obtain such information.

*Miscellaneous Comments*

One commenter stated that it is impermissible for the Department of Agriculture to charge user fees on behalf of another agency since CBP conducts the inspections rather than the Department of Agriculture. Another commenter stated that collection of user fees adds an additional clerical function on border officers and that not only is it time-consuming, but that it requires additional recordkeeping and financial controls.

While the Homeland Security Act of 2002 transferred certain AQI activities from APHIS to CBP, including conducting inspections, the management of the AQI user fee account, setting fees, and monitoring inspection related expenses and collections continues to be APHIS' responsibility. Since CBP is currently collecting customs fees, the collection of AQI user fees does not present an additional clerical function because the AQI user fees are collected at the same

time as CBP customs fees. In addition, as had been the case prior to the interim rule, CBP continues to conduct inspections and collect AQI user fees at the Mexican border without any collection-related delays. Likewise, we are not aware of any collection-related delays at the Canadian border since implementation of the interim rule.

*Comments Regarding the Economic Analysis*

Several commenters expressed concerns regarding the economic analysis for the rule, particularly the accuracy of user fee collection and cost estimates, and asked for a detailed cost-benefit analysis. Several commenters stated that because we did not provide a quantitative comparison of expected benefits and costs of the rule, APHIS failed to satisfy the requirements of Executive Order 12866. One commenter cited the information we presented indicating that most motor carriers qualify as small businesses and stated that, because of this, APHIS should reevaluate the effect of the user fees.

Our economic analysis included a cost-benefit analysis and evaluated the economic impacts on small entities with the best information available at that time. In this final rule, we have provided an updated final economic analysis. The commenters are correct in that we are unable to quantitatively project the benefits that will be attributable to the November 2006 interim rule and this final rule in terms of the reduced risk of animal and plant pests and diseases entering from Canada. It is difficult to determine the animal and plant pests and diseases that may be present in Canada or that may travel through Canada destined for the United States. It is also difficult to trace infestations already established in the United States back to their point of origin. However, we do know that these risks are genuine. U.S. agriculture and other sectors of the economy are unfortunately well acquainted with the costs of pest or disease introductions when interception fails, given the large public and private expenditures devoted to ongoing animal and plant pest control and eradication programs.

Although we are not able to quantify the benefits of this rule, we are confident that the benefits of this rule (costs forgone because the resources made available will help prevent pest and disease entry from Canada) will outweigh its costs. This conclusion satisfies a principal requirement of Executive Order 12866. In addition, Executive Order 12866 does not require that benefits and costs be quantified, only that they be evaluated as completely as possible.

*Alternatives Suggested by Commenters*

Many commenters suggested alternatives to the interim rule. One of these suggestions was to require permits and phytosanitary certificates for agricultural goods from Canada that are imported into the United States. Another suggestion was to utilize preclearance systems to inform CBP about shipment information before arrival at the border in order to target inspections toward shipments of presumed greater risk. A third suggestion was to conduct inspections closer to the third-country source, such as at the production facility, because third-country products seem to hold the most risk.

While permits, phytosanitary certificates, and preinspection systems are valuable ways to gain information about shipments before arrival, they do not prevent plant pest hitchhikers from attaching themselves to vehicles or shipments, or prevent importers from falsifying information or adding additional items to shipments before crossing the border. Therefore, inspection at the border would still be necessary to ensure that any such systems are working as intended. In addition, because pathways change, it is necessary to continue to monitor the flow of imports to ensure that agricultural pests are not entering the country via previously unknown means. Therefore, inspections at the border would still be necessary to mitigate risk. APHIS is continually working with Canadian officials to explore ways to lower and control pest risk.

Therefore, for the reasons given in the interim rule and in this document, we are adopting the interim rule as a final rule with the changes discussed in this document.

**Effective Date**

We are making final, with certain changes, an interim rule published in the **Federal Register** on August 25, 2006, that amended the foreign quarantine and user fee regulations by removing the exemption from inspection for imported fruits and vegetables grown in Canada and the exemptions from user fees for commercial vessels, commercial trucks, commercial railroad cars, commercial aircraft, and international air passengers entering the United States from Canada. Certain provisions of the interim rule became effective on January 1, 2007, and on March 1, 2007, with the remainder becoming effective on June 1, 2007. The changes in this final rule include user fee exemptions for railroad cars that are part of a train that originates and terminates in Canada where no passengers embark or disembark and no cargo is loaded or unloaded while in the United States and vessels traveling to Canada only to refuel. In addition, this final rule exempts from user fees barges that carry non-containerized cargo that originates only in the United States or Canada and that does not carry any plants or plant products, animals or animal products, or soil or quarry products from areas in Canada regulated for gypsy moth. Because this final rule provides specified exemptions from user fees and thus relieves restrictions, the Administrator has determined that this rule can be made effective less than 30 days after publication in the **Federal Register.**

**Executive Order 12866 and Regulatory Flexibility Act**

This rule has been determined to be significant for the purposes of Executive Order 12866 and, therefore, has been reviewed by the Office of Management and Budget.

We have prepared an economic analysis for this final rule. It provides a cost-benefit analysis as required by Executive Order 12866, as well as a final regulatory flexibility analysis that considers the potential economic effects of this final rule on small entities, as required by the Regulatory Flexibility Act. The economic analysis is summarized below. Copies of the full analysis are available on the Regulations.gov Web site (see footnote 1 in this document for a link to Regulations.gov) or by contacting the person listed under **FOR FURTHER INFORMATION CONTACT**.

We are adopting as a final rule, with the changes discussed in this document, an interim rule that amended the foreign quarantine and user fee regulations by removing the exemptions from inspection for certain agricultural products imported from Canada and the exemptions from user fees for commercial vessels, commercial trucks, commercial railroad cars, commercial aircraft, and international air passengers entering the United States from Canada. As a result of that action, all agricultural products imported from Canada are subject to inspection, and commercial conveyances, except as otherwise noted, as well as airline passengers arriving on flights from Canada, are subject to user fees.

*Expected Benefits*

The objectives of the amended regulations were to expand and

strengthen our pest exclusion and smuggling interdiction efforts at the Canadian border by subjecting all agricultural products and all commercial conveyances, with certain exceptions established by this rule, to inspection and to enable the Federal Government to recover the cost of those inspections through user fees. In 1991, APHIS established AQI user fees for inspections of commercial conveyances and international air passengers arriving in the United States from all foreign countries except Canada. The exemption of Canada from the AQI user fees was based on our understanding that conveyances and passengers from Canada posed little risk of introducing plant or animal pests or diseases into the United States. Since 1991, the nominal value of U.S. agricultural imports from Canada has increased over fourfold, from $3.3 billion in 1991 to $15.2 billion in 2007. In addition, with the globalization of trade, shipments of re-exported agricultural products that originate in countries other than Canada but enter from Canada into the United States have increased significantly. For example, total exports of fruits and vegetables to the United States from Canada increased by 167 percent over the 10-year period between 1998 and 2007, while Canada's re-export of fruits and vegetables to the United States increased by 738 percent during this same period. In addition to the growing volume of legitimate re-exports, there is incentive to commingle third-country goods with Canadian-produced goods because of lower U.S. tariffs for goods for Canadian origin. Opportunities to smuggle goods across the border also have increased as the volume of commercial traffic and number of air passengers have grown.

Emergency Action Notifications (EANs) issued illustrate the increasing risks associated with the agricultural products entering from Canada. An EAN is an APHIS form used by CBP to communicate to importers the sanitary or phytosanitary reasons for an emergency action and what the action entails, such as treatment, re-export, or destruction of the goods. The EAN records indicate an increasing number of emergency actions related to agricultural goods entering from Canada. For example, during FY 2007, a total of 1,193 EANs were issued for products shipped from Canada to the United States. Nine hundred thirty-three of these EANs (or 78 percent) were issued for Canadian products and 260 (22 percent) were issued for products of non-Canadian origin. As 22 percent is substantially higher than the 5 percent of Canada's fruit and vegetable shipments to the United States in 2007 that were re-exports, this represents a disproportionately high quantity of EANs for re-exports in comparison to the total number of EANs issued for shipments from Canada.

Among EANs issued for re-exported products, 126 EANs were for products that originated in Asia and 62 EANs were for products that originated in regions south of the United States, i.e., Mexico, Central America, and South America. In FY 2007, 55 countries other than Canada were reported as countries of origin on EANs for products entering from Canada. Altogether, over 100 pest species were intercepted in FY 2007 and FY 2008. Examples of intercepted pests are the Mexican fruit fly (*Anastrepha ludens* Loew (Tephritidae)), found in containers that originated in Mexico, and the gypsy moth (*Lymantria dispar* Linnaeus (Lymantriidae)), found in shipments of firewood of Canadian origin.

Data generated by the Agricultural Quarantine Inspection Monitoring (AQIM) program also illustrate a greater sanitary and phytosanitary risk associated with agricultural products that enter the United States from Canada than anticipated when we first established AQI user fees and exempted Canada from those fees. Under the AQIM program, CBP agricultural inspectors conduct random inspections within each major pathway to assess their relative risk, and APHIS–PPQ monitors the collected data. AQIM keeps track of Quarantine Material Interceptions (QMIs), which are regulated agricultural materials seized because of prohibition, permit denial, pest risk, or abandonment. Approach rates, defined as the number of QMIs as a percentage of the number of conveyances inspected, for commercial trucks at the U.S./Canada border show a substantial 1-year increase in interceptions, from 0.68 percent of trucks sampled in FY 2006 to 1.73 percent of trucks sampled in FY 2007. This increase cannot be explained by an increase in the rate of inspection for FY 2007 over FY 2006. Applying the FY 2007 approach rate of 1.73 percent to the 6.6 million trucks that CBP reports as having entered the United States from Canada that year, implies that over 100,000 of the trucks may have been carrying quarantine material.

As an example of the risk of foreign pest introduction, plum pox is a disease that was introduced into the United States. It is a devastating viral disease of stone fruit, such as peaches, apricots, plums, nectarines, almonds, and cherries. It is transmitted within an orchard by aphids and over long distances through the movement of infected nursery stock, propagative material, and fruit. The plum pox virus first appeared in the United States in Pennsylvania in October 1999. In 2006, it was detected in New York and Michigan. APHIS established an eradication program to prevent the spread of plum pox to noninfested areas of the United States. Since 2000, APHIS has set aside $50.7 million to address plum pox disease. We do not have evidence that plum pox was introduced from Canada, where it is also known to exist. However, the expenses incurred because of this disease exemplify the types of costs that may be avoided or reduced by removing the inspection exemption and providing additional resources for AQI inspections at the U.S./Canada border.

We are unable to quantify either the risk that existed prior to implementation of the interim rule, nor the reduction in risk following its implementation. Our knowledge of the disease and pest threats posed by goods entering from Canada and the extent to which the AQI inspection activities mitigate those threats is currently imperfect. Rarely are we able to precisely trace an established infestation by an invasive species to its country of origin. However, we do know that these risks are genuine. The disproportionately large number of EANs issued for shipments of third-country origin and the approach rates shown in the AQIM program point to significant and growing risks of disease and pest introduction. The intentional or unintentional commingling of products of third-country origin with goods of Canadian origin heightens these risks. Outright smuggling of goods across the U.S./Canada border is also a growing threat due to the increasing volume of commodities and number of travelers that cross the border into the United States each year. U.S. agriculture and other sectors of the economy are unfortunately well acquainted with the costs associated with pest and disease introductions when interception fails. Large public and private expenditures have been devoted to animal and plant pest and disease control and eradication programs, as exemplified by the costs of plum pox. This rulemaking will enable us to increase our inspections and targeting activities at the U.S./Canada border. The inspections will help safeguard against the risk of pest and disease introductions and, therefore, reduce agricultural losses and expenditures for pest and disease control and eradication. The regulations

will also allow us to recover the costs of these activities.

*Costs of the Rule*

The amended regulations impose a direct fee on all commercial conveyances crossing the U.S./Canada border, except in three instances: (i) Barges operating solely between U.S. and Canadian ports that carry only bulk cargo that does not originate outside of the United States or Canada and that do not carry any plants or plant products or animal or animal products, and that do not carry soil or quarry products from areas in Canada listed in § 319.77–3 as being infested with gypsy moth; (ii) railroad cars that are part of a train that originates and terminates in Canada and that does not load or unload passengers or cargo while in the United States; [3] and (iii) vessels returning to the United States after traveling to Canada solely to take on fuel.

In the preliminary economic analysis for the interim rule, we noted the possibility of shipping delays because of the AQI inspections. Additional cost that might arise due to shipping delays was one of the most frequently raised concerns among our stakeholders. CBP inspectors are required to inspect commercial trucks while maintaining a steady traffic flow. CBP performs inspections based on risk profiles and available resources, as well as randomly.

**User Fees**

Four modes of conveyance—trucks, railroad cars, maritime vessels, and aircraft—and international air passengers are assessed AQI user fees, as shown in Table 1.

TABLE 1—AQI USER FEES FOR CONVEYANCES AND AIR PASSENGERS ENTERING THE UNITED STATES, FISCAL YEARS 2007, 2008, AND 2009

| | FY 2007 | FY 2008 | FY 2009 |
|---|---|---|---|
| Maritime vessels | $490 per crossing (max 15 payments per year). | $492 per crossing (max 15 payments per year). | $494 per crossing (max 15 payments per year). |
| Trucks [1] | $5.25 per crossing or $105 per year | $5.25 per crossing or $105 per year | $5.25 per crossing or $105 per year. |
| Railroad cars [2] | $7.75 crossing | $7.75 per crossing | $7.75 per crossing. |
| Aircraft | $70.50 per arrival | $70.50 per arrival | $70.75 per arrival. |
| Air passengers | $5 per passenger | $5 per passenger | $5 per passenger. |

[1] Truck operators have the choice of paying per crossing or purchasing a yearly decal. The cost of the yearly decal ($105) is 20 times the fee for an individual crossing ($5.25).

[2] If the AQI user fee is prepaid for all arrivals of a commercial railroad car during a calendar year, the AQI user fee is an amount 20 times the AQI user fee for each arrival.

*Surface conveyances.* All trucks and trains transporting goods to the United States are subject to inspection. A user fee of $5.25 per crossing, or $105 per year, is charged for each truck, and a fee of $7.75 per crossing is charged for each loaded railroad car, other than for railroad cars in transit, as described above.

Trucks, trains, and all other commercial surface conveyances transported goods valued at approximately $511 billion across the U.S./Canada border in 2007, with $285 billion in imports into the United States from Canada and $226 billion in exports from the United States to Canada.[4] Trucks remain the dominant commercial mode of transportation, carrying $150 billion in U.S. imports and $174 billion in U.S. exports across the U.S./Canada border in 2007. That same year, railroads transported $66 billion in U.S. imports and $25 billion in U.S. exports across the U.S./Canada border. While agricultural shipments are generally the focus of AQI inspections, all commercial surface conveyances crossing the border are subject to inspection.

For commercial trucking, the Small Business Administration (SBA) defines a small entity as one having not more than $25.5 million in annual receipts. According to the 2002 Economic Census, there were 29,220 general long-distance freight trucking firms in the United States (North American Industry Classification System [NAICS] code 484121). A total of 371 of these firms, or less than 2 percent, had annual receipts of $25 million or more, the largest revenue category identified. Thus, not less than 98 percent of trucking firms in the United States are small entities. We do not know the number or size of trucking firms that transport products across the border from Canada, but can reasonably assume that they are also mostly small entities.

For commercial railroad transportation, the SBA defines a small entity as one having not more than 1,500 employees for long-haul railroads (NAICS code 482111) and not more than 500 employees for short-line railroads (NAICS code 482112). Of the 571 firms operating as railroad transportation companies in the United States, 18 firms employed more than 500 workers. Therefore, approximately 97 percent of commercial railroad companies in the United States are considered small entities. We can reasonably assume that this percentage applies to railroad companies that transport products into the United States from Canada.

*Waterborne conveyances.* Commercial vessels transporting goods to the United States (100 net tons or more) are subject to inspection. Beginning March 1, 2007, waterborne conveyances were charged a user fee of $490 per crossing in FY 2007. In FY 2008, the fee was $492 per crossing, and increased to $494 per crossing in FY 2009. Total waterborne trade with Canada was valued at $18 billion in 2005, $14 billion in U.S. imports and $4 billion in U.S. exports.[5] Commodities transported by waterborne conveyances comprised 26 percent of total tonnage crossing the U.S./Canada border in 2005, with this mode of conveyance especially suitable for heavy bulk products such as grain and crude petroleum. As with the surface conveyances, we expect the focus of inspections of waterborne conveyances to be shipments of agricultural commodities.

For commercial water transportation, the SBA defines a small entity as one

[3] The railroad cars are required to be part of the same train when they return to Canada. The current AQI user fee regulations (7 CFR 354.3) provide a similar exemption for all U.S. railroad cars that transit Canada or Mexico and return to the United States. Sanitary and phytosanitary risks are minimal for these types of shipments.

[4] Bureau of Transportation Statistics, TransBorder Surface Freight dataset, *http://www.bts.gov/transborder/.*

[5] Bureau of Transportation Statistics, North American Freight Transportation, June 2006.

having not more than 500 employees. According to the 2002 U.S. Economic Census for Transportation and Warehousing, 724 firms operated in the United States providing "deep sea, coastal, and Great Lakes water transportation" (NAICS codes 483111 and 483113). Nine of these firms employed 500 to 999 employees and 5 firms employed 1,000 or more employees. Thus, over 98 percent of water transportation firms in the United States employed fewer than 500 workers and can be considered small. Approximately 1,895 vessels were used to move cargo from Canada to the United States in 2005. We can assume that most if not all of the firms owning these vessels are small entities.

*Aircraft and air passengers.* All air cargo and conveyances arriving in the United States are subject to inspection. Commercial aircraft were charged a user fee of $70.50 per arrival in FY 2008, and the user fee was increased to $70.75 in FY 2009. The modal share of air cargo as a percentage of total U.S. imports from Canada steadily declined to 4.1 percent in 2006, from a peak of 6.6 percent in 2000. Preliminary data for 2007 indicate a slight increase in air cargo's modal share, to 4.4 percent.[6]

All air passengers arriving in the United States are charged a user fee of $5. In FY 2007, the total number of air passengers traveling from Canada to the United States was 11.9 million, an increase over the previous year and a return to pre-9/11 levels for the first time.[7]

For commercial air transportation, the SBA defines a small entity as one having not more than 1,500 employees. According to the 2002 U.S. Economic Census for Transportation and Warehousing, there were 513 firms in the United States classified under "scheduled freight air transportation" (NAICS code 48111), of which only 12 firms employed more than 1,000 employees. Thus, about 98 percent of all air transportation firms in the United States are small.

Clearly, most of the surface, waterborne, and air conveyance entities that are directly affected by the rule are small, although we do not have precise estimates of their numbers.

**Estimated User Fee Collection and Federal Expenditures**

Table 2 shows FY 2008 estimated user fee collections and expenditures for the inspection of conveyances and air passengers arriving from Canada. Expected AQI expenditures for the U.S./Canada border set forth in this final rule differ from those presented in the preliminary economic analysis for the interim rule. We projected Federal expenditures for a single year for the interim rule that totaled about $74.8 million, with about $68.5 million for additional CBP staffing and direct support, and about $6.3 million for indirect support (agency, departmental, and other administrative costs). In Table 2, we explicitly acknowledge the complementary roles that CBP and APHIS play in fulfilling the AQI mission at the U.S./Canada border by estimating FY 2008 expenditures separately for the two agencies. Broadly speaking, CBP is responsible for AQI inspection activities, while APHIS is responsible for setting policy, providing training, and establishing and collecting user fees to pay for the CBP inspections.

As shown in table 2, we estimated FY 2008 AQI user fee collection to total about $89.3 million and Federal expenditures for the AQI activities for conveyances and air passengers from Canada to total about $98.7 million (about $78.6 million to fund the CBP program and about $20.1 million to fund the APHIS program). The CBP expenditures are based on the estimated volume of inbound border crossings from Canada for the various modes of conveyance covered by the rule and for airline passengers.[8] Although our estimated figures show a deficit of about $9.4 million, a reserve fund is maintained to carry on with AQI activities in cases of bad debt, carrier insolvency, or fluctuations in activity volumes.

APHIS performs a number of functions in support of AQI activities at the U.S./Canada border that can be categorized within the following areas: Port operations and policy, science and technical support, training for CBP agriculture inspectors, import analysis and risk management, pest and disease identification, and regulatory enforcement and anti-smuggling programs. The overall cost for APHIS is composed of expenditures on these various functions. Expenditures for both APHIS and CBP also include administrative and other overhead costs.

TABLE 2—ESTIMATED USER FEE COLLECTION AND FEDERAL EXPENDITURES FOR THE U.S./CANADA BORDER AQI SERVICES, FY 2008 (MILLION DOLLARS)

| | |
|---|---|
| AQI user fee collection | $89.3 |
| CBP expenditure | 78.6 |
| APHIS expenditure | 20.1 |
| Total Federal expenditures | 98.7 |

Sources: APHIS–Financial Management Division, CBP–Budget Cost Management Division, APHIS–PPQ and APHIS–Budget & Program Analysis.

**Alternatives**

Four possible alternatives to the interim rule were identified, none of which would accomplish the objectives of the rule or minimize effects for small entities.

One alternative would have been to make no changes to the current regulations. However, inspections along the U.S./Canada border have resulted in an increasing number of interceptions of prohibited material that originated from countries other than Canada. The growth in imports and in the number of air passengers arriving from Canada has placed increased demands on CBP staff at U.S./Canada border ports and airports. This rule is necessary in order to strengthen our AQI activities and lessen the risk of introduction of plant and animal pests and diseases. Removing the Canadian exemption from AQI user fees is necessary to recover the costs of our existing inspection activities and to implement an expanded inspection program.

Another alternative to the interim rule would have been to limit our inspections to commercial conveyances and not include international passengers entering the United States from Canada in the AQI inspection program. However, results of AQI preclearance activities at Canadian airports have demonstrated that air passengers from Canada represent an important pest pathway. As stated in the full economic analysis, data gathered at four airports (Calgary, Toronto, Vancouver, and Montréal) over a four-year period (FY 2001–FY 2004) showed that over 6 percent of all U.S.-bound passengers (Canadian and non-Canadian origin) carried prohibited agricultural products. Most of these passengers were taking flights to States such as California, Florida, Arizona, and Texas, where the prohibited products could place major agricultural industries at

[6] Transport Canada, Transportation in Canada 2007 *http://www.tc.gc.ca/policy/report/aca/anre2007/pdf/add2007-e.pdf.* Exports to the U.S. include re-exports and domestic exports.

[7] CBP. The data include air passengers and crews.

[8] CBP uses an Activity Based Costing (ABC) methodology, whereby data are collected from various CBP sources and compiled for a cost-of-operations perspective of the organization. ABC is a means of operationally analyzing how an organization consumes its resources (direct and indirect). The focus is on activities performed within given processes.

risk.[9] Air passengers from all foreign countries, not just Canada, are considered important pest pathways due to the fact they may travel to multiple destinations in one trip and travel great distances over a relatively short amount of time. Therefore, it is necessary for all air passengers, including Canadian air passengers to be subject to AQI user fees. In addition, in surveys and inspection blitzes conducted on passenger baggage at destination airports in the United States, significant amounts of prohibited agricultural materials were found, such as tropical and exotic fruits and vegetables purchased at Canadian markets, as well as prohibited animal products. We would not be able to prevent or control the movement of such regulated articles into the United States if we did not increase our passenger inspection activities at Canadian airports, along with our conveyance inspection activities, at the U.S/Canada border. We could not recover the costs of passenger inspections if we did not charge passengers AQI user fees.

A third alternative would have been to only charge AQI user fees for inspections of commercial conveyances transporting agricultural goods. This alternative would eliminate impacts on conveyances that do not transport agricultural goods by eliminating the need for them to pay user fees. However, animal and plant pests may be found on or in conveyances even if they are not carrying agricultural products and even if they are empty. For example, solid wood packing material, estimated to be present in some 70 percent of all Canadian rail containers, can be a pathway for the Asian and citrus longhorned beetles, pine shoot beetle, emerald ash borer, and other pests. In addition, restricted nonagricultural products, such as Italian tile shipments that could be carrying hitchhiking snails, seat cushions stuffed with restricted grasses, or wooden handicrafts that could be harboring wood-boring insects pose a risk to American agriculture if they enter the United States. Therefore, APHIS employees familiar with the risks presented by the conveyances themselves and by containers importing nonagricultural products determined that it is necessary for all conveyances from Canada to be inspected. In order to recover the costs of these inspections, AQI user fees would still be necessary, except as otherwise noted.

A fourth alternative would have been to develop new user fees specific to Canada that would be different from the user fees charged to all other countries. However, we concluded that it was not a valid alternative as our intention in the interim rule was to harmonize the inspection requirements and the AQI user fees charged for conveyances entering the United States from Canada with the inspections and AQI user fees for conveyances entering the United States from all other countries in the world. In addition, we have determined that charging different user fees specific to Canada would result in potential delays and increased expenses as a new collection system would have to be developed and implemented to collect those fees.

**Executive Order 12988**

This rule has been reviewed under Executive Order 12988, Civil Justice Reform. This rule: (1) has no retroactive effect and (2) does not require administrative proceedings before parties may file suit in court challenging this rule.

**Paperwork Reduction Act**

This final rule contains no information collection or recordkeeping requirements under the Paperwork Reduction Act of 1995 (44 U.S.C. 3501 *et seq.*).

**List of Subjects in 7 CFR Part 354**

Animal diseases, Exports, Government employees, Imports, Plant diseases and pests, Quarantine, Reporting and recordkeeping requirements, Travel and transportation expenses.

■ Accordingly, the interim rule amending 7 CFR parts 319 and 354 that was published at 71 FR 50320 on August 25, 2006, is adopted as a final rule with the following changes:

## PART 354—OVERTIME SERVICES RELATING TO IMPORTS AND EXPORTS; AND USER FEES

■ 1. The authority citation for part 354 continues to read as follows:

**Authority:** 7 U.S.C. 7701–7772, 7781–7786, and 8301–8317; 21 U.S.C. 136 and 136a; 49 U.S.C. 80503; 7 CFR 2.22, 2.80, and 371.3.

■ 2. Section 354.3 is amended as follows:

■ a. In paragraph (a), by adding a definition for *barge* to read as set forth below.

■ b. In paragraph (b)(2)(iv), by removing the word "bunkers" and adding the word "fuel" in its place.

■ c. By adding new paragraphs (b)(2)(vi), (b)(2)(vii), and (d)(2)(i) to read as set forth below.

**§ 354.3 User fees for certain international services.**

(a) * * *

*Barge.* A non-self-propelled commercial vessel that transports cargo that is not contained in shipping containers. This does not include integrated tug barge combinations.

* * * * *

(b) * * *

(2) * * *

(vi) Barges traveling solely between the United States and Canada that do not carry cargo originating from countries other than the United States or Canada and do not carry plants or plant products, or animals or animal products, and that do not carry soil or quarry products from areas in Canada listed in § 319.77–3 of this chapter as being infested with gypsy moth.

(vii) Vessels returning to the United States after traveling to Canada solely to take on fuel.

* * * * *

(d) * * *

(2) * * *

(i) Any commercial railroad car that is part of a train whose journey originates and terminates in Canada if—

(A) The commercial railroad car is part of the train when the train departs Canada; and

(B) No passengers board or disembark from the commercial railroad car, and no cargo is loaded or unloaded from the commercial railroad car, while the train is within the United States.

* * * * *

Done in Washington, DC, this 3rd day of March 2010.

**Edward Avalos,**

*Under Secretary for Marketing and Regulatory Programs.*

[FR Doc. 2010–4949 Filed 3–8–10; 8:45 am]

BILLING CODE 3410–34–P

[9] APHIS–PPQ, AQI Monitoring (AQIM) program. For the AQIM program, CBP agricultural inspectors conduct random inspections within each major pathway to assess their relative risk, and APHIS–PPQ monitors the collected data. PPQ and CBP use the AQIM data to evaluate the effectiveness of port-of-entry operations, set goals, and compare performance after making operational changes. The AQIM program was instituted to assist with the mandate of the Government Performance and Results Act (GPRA) of 1993. Source: APHIS AQIM Handbook.

**DEPARTMENT OF AGRICULTURE**

**Animal and Plant Health Inspection Service**

**9 CFR Parts 53, 56, 145, 146, and 147**

**[Docket No. APHIS-2005-0109]**

**RIN 0579-AB99**

# Low Pathogenic Avian Influenza; Voluntary Control Program and Payment of Indemnity

**AGENCY:** Animal and Plant Health Inspection Service, USDA.

**ACTION:** Final rule.

**SUMMARY:** We are adopting as a final rule, with changes, an interim rule that amended the regulations by establishing, under the auspices of the National Poultry Improvement Plan, a voluntary program for the control of the H5/H7 subtypes of low pathogenic avian influenza in commercial poultry. As amended by this document, the rule provides that the amount of indemnity for which contract growers are eligible will be reduced by any payment they have already received on their contracts when poultry in their care are destroyed, clarifies the roles of cooperating State agencies with respect to H5/H7 low pathogenic avian influenza outbreaks, provides that consistency with humane euthanasia guidelines will be considered when selecting a method for the destruction of poultry, and provides additional guidance for cleaning and disinfecting an affected premises. The control program and indemnity provisions established by the interim rule are necessary to help ensure that the H5/H7 subtypes of low pathogenic avian influenza are detected and eradicated when they occur within the United States.

**EFFECTIVE DATE:** March 9, 2010.

**FOR FURTHER INFORMATION CONTACT:** Mr. Andrew R. Rhorer, Senior Coordinator, Poultry Improvement Staff, National Poultry Improvement Plan, Veterinary Services, APHIS, USDA, 1498 Klondike Road, Suite 101, Conyers, GA 30094-5104; (770) 922-3496.

**SUPPLEMENTARY INFORMATION:**

## Background

The National Poultry Improvement Plan (NPIP, also referred to below as "the Plan") is a cooperative Federal-State-industry mechanism for controlling certain poultry diseases. The Plan consists of a variety of programs intended to prevent and control poultry diseases. Participation in all Plan programs is voluntary, but breeding flocks, hatcheries, and dealers must first qualify as "U.S. Pullorum-Typhoid Clean" as a condition for participating in the other Plan programs.

The Plan identifies States, flocks, hatcheries, dealers, and slaughter plants that meet certain disease control standards specified in the Plan's various programs. As a result, customers can buy poultry that has tested clean of certain diseases or that has been produced under disease-prevention conditions. The regulations in 9 CFR parts 145, 146, and 147 (referred to below as the regulations) contain the provisions of the Plan.

In an interim rule[1] effective and published in the **Federal Register** on September 26, 2006 (71 FR 53601-56333, Docket No. APHIS-2005-0109), we amended the regulations to establish a voluntary control program for the H5/H7 subtypes of low pathogenic avian influenza (H5/H7 LPAI) in commercial poultry—specifically, in table-egg layers, meat-type chickens, and meat-type turkeys. The provisions of this program were established in a new part 146. The interim rule also established a new part 56, titled "Control of H5/H7 Low Pathogenic Avian Influenza," in 9 CFR chapter I, subchapter B, to provide for the payment of indemnity for costs associated with the eradication of H5/H7 LPAI.

We solicited comments on the interim rule for 60 days ending November 27, 2006. We received 11 comments by the due date. They were from State governments, industry associations, advocacy groups, and private citizens. We have carefully considered all of the comments we received. They are discussed below by topic.

*General Comments*

One commenter stated that the conditions under which commercial poultry are produced cause disease, and that the U.S. Department of Agriculture (USDA) should prohibit current poultry production practices.

We do not agree with the commenter's recommendation and do not believe it is necessary or appropriate to consider such regulation of poultry production practices in this rulemaking. H5/H7 LPAI is caused by a virus. The interim rule provided for surveillance programs and emergency response provisions to detect and eradicate the virus.

The "Background" section of the interim rule stated that there are 15 recognized hemagglutinin (H) subtypes of avian influenza (AI). One commenter stated that there are 16 such subtypes.

The commenter is correct. Since the regulations do not refer to the number of hemagglutinin subtypes, no change in the regulations established by the interim rule is necessary.

The "Background" section also stated the following: "Diagnostic surveillance [for AI in the United States] is conducted through industry, State, and university diagnostic laboratories. These laboratories routinely test for AI, both serologically and by virus isolation, whenever birds are submitted from a flock with clinical signs compatible with HPAI or LPAI." One commenter suggested that this statement should refer to testing for AI by serology, antigen detection, and/or virus isolation, because serology cannot be performed on dead birds.

We agree with the commenter. Diagnostic surveillance laboratories in the United States use whatever means are appropriate to test poultry for AI. This comment does not necessitate a change in the regulations established by the interim rule.

On the subject of surveillance for AI, the interim rule stated that Texas established a surveillance program for commercial poultry flocks near the Mexican border following the Mexican HPAI outbreak in 1994-95. One commenter suggested deleting the words "near the Mexican border" from this statement.

We agree; the program in Texas was Statewide. This comment does not necessitate a change in the regulations established by the interim rule.

The interim rule established the new part 146 for table-egg layers, meat-type chickens, and meat-type turkeys as the NPIP regulations for commercial poultry. One commenter suggested that we amend the NPIP regulations for breeding poultry in 9 CFR part 145 to refer to "commercial breeding flocks" and "commercial breeding poultry."

We have determined that such a change would be inappropriate. The regulations established by the interim rule use the term "commercial" to refer to large-scale operations producing poultry for meat or eggs for consumption. The commenter apparently intends that the term "commercial" be used to refer to any large-scale operation. This could create confusion, since the poultry regulated in 9 CFR part 146 would not be clearly distinct from the poultry regulated in part 145. In addition, using the term "commercial" to refer to the poultry covered by 9 CFR part 145 would be inaccurate, as the breeders who participate in the Plan under subpart E

[1] To view the interim rule and the comments we received, go to (*http://www.regulations.gov/fdmspublic/component/main?main=DocketDetail&d=APHIS-2005-0109*).

of part 145, which covers waterfowl, exhibition poultry, and game bird breeding flocks and products, typically are hobbyist breeders rather than large-scale breeders. We are making no changes in response to this comment.

*Auditing*

In the regulations established by the interim rule, § 146.11 provides for inspection of participating flocks and slaughter plants. Paragraph (a) of § 146.11 requires each participating slaughter plant to be audited at least once annually or a sufficient number of times each year to satisfy the Official State Agency that the participating slaughter plant is in compliance with the provisions of 9 CFR part 146.

One commenter stated that this language implies but does not specifically state that the Official State Agency will both audit and determine compliance. If we do not envision any potential conflict of interest and the inference is correct, the commenter recommended amending the text to clarify. The commenter suggested using the following text: "Each participating slaughter plant shall be audited at least once annually by the head of the Official State Agency or a sufficient number of times each year to satisfy him/her self that the participating slaughter plant is in compliance with the provisions of this part."

Our intention in § 146.11(a) was to refer to audits of records of testing, and the results of that testing, that are kept by the slaughter plant, rather than to any audit of the slaughter plant facility itself. Audits by the Official State Agency of testing records should not create any conflict of interest; this process is also used in the NPIP regulations in 9 CFR part 145.

In a final rule published in the **Federal Register** on April 1, 2009 (74 FR 14710-14719, Docket No. APHIS-2007-0042), and effective on May 1, 2009, we amended § 146.11 so that it refers specifically to auditing testing records and provides additional detail about the auditing process. We believe these changes addressed the commenter's concerns, and we are making no further changes to the auditing provisions in § 146.11 in this final rule.

*Testing*

In the regulations established by the interim rule, § 146.13 sets out requirements for testing Plan flocks for AI. Paragraph (b)(1) of § 146.13 provides that any samples that are found to be positive by the agar gel immunodiffusion test must be further tested and subtyped by Federal Reference Laboratories using the hemagglutination inhibition test.

One commenter asked that we include a list in the regulations of laboratories that are Federal Reference Laboratories.

The regulations for testing for AI in breeding poultry, in § 145.14(d), also refer to further testing and subtyping by Federal Reference Laboratories. Currently, the only Federal Reference Laboratory for AI is the National Veterinary Services Laboratories (NVSL) in Ames, IA. In response to this comment, we will post a list of Federal Reference Laboratories on the NPIP Web site, at (*http://www.aphis.usda.gov/animal_health/animal_dis_spec/poultry/index.shtml*).

*Diagnostic Surveillance Program*

In the regulations established by the interim rule, § 146.14 requires all States participating in the Plan for commercial poultry to develop a diagnostic surveillance program for all poultry, not just commercial poultry, in that State. The diagnostic surveillance program is one of the three components that were identified as key to the H5/H7 LPAI program at a meeting APHIS organized with State and industry representatives that took place in May 2002 in San Antonio, TX.

The exact provisions of the program are at the discretion of the States, but under the program, AI must be a disease reportable to the responsible State authority (State veterinarian, etc.) by all licensed veterinarians. To accomplish this, all laboratories (private, State, and university laboratories) that perform diagnostic procedures on poultry must examine all submitted cases of unexplained respiratory disease, egg production drops, and mortality for AI by both an approved serological test and an approved antigen detection test.

Memoranda of understanding or other means must be used to establish testing and reporting criteria (including criteria that provide for reporting H5 and H7 LPAI directly to the Service) and approved testing methods. In addition, States should conduct outreach to poultry producers, especially owners of smaller flocks, regarding the importance of prompt reporting of clinical symptoms consistent with AI.

One commenter had a specific concern with requiring all laboratories (private, State, and university laboratories) that perform diagnostic procedures on poultry to examine all submitted cases of unexplained respiratory disease, egg production drops, and mortality for AI by both an approved serological test and an approved antigen detection test. The commenter stated that this requirement should apply only to commercial poultry. Such a change is necessary, the commenter stated, because owner consent is critical for diagnostic laboratories and, in the commenter's State, laboratories that perform tests must also charge fees.

It is true that some poultry owners may have to bear the burden of additional testing costs associated with the diagnostic surveillance program's testing requirements. Although some States do not impose charges for such testing, many States do. However, producers smaller than the size standards established in 9 CFR part 146 are only required to participate in the diagnostic surveillance program, which means testing for AI is only required for submitted cases of unexplained respiratory disease, egg production drops, and mortality.

The diagnostic surveillance program is a key component of the H5/H7 LPAI program because it allows surveillance to reach all sectors of the poultry industry. In addition, the index case in an outbreak will likely be detected through the diagnostic surveillance program, since it focuses on sick poultry. Detecting H5/H7 LPAI quickly will expedite the response and control or eradication of H5/H7 LPAI before they have the chance to mutate to highly pathogenic strains of AI. Therefore, it is crucial to the success of the H5/H7 LPAI program to have the diagnostic surveillance program apply to all poultry. We are making no changes to the regulations established by the interim rule in response to this comment.

*Surveillance of Live Bird Markets and Pet Birds*

As noted earlier, the voluntary control program established by the interim rule requires diagnostic surveillance for all poultry in participating States. It also requires active surveillance for participating commercial flocks and slaughter plants over certain size thresholds, but does not include requirements for active surveillance for other flocks and slaughter plants. In the "Background" section of the interim rule, we briefly discussed the active surveillance that we carry out in live bird markets, noting that APHIS has entered into cooperative agreements with States that have live bird market activities, as well as Official State Agencies and NPIP authorized laboratories participating in the NPIP LPAI program.

One commenter stated that, while increased surveillance activities at live bird markets lower the risk of AI transmission, continued outbreaks of

the disease indicate that this approach is inadequate. The commenter encouraged APHIS to take a further step and permanently prohibit the sale and slaughter of birds at public markets. In the commenter's view, this action would not only provide for disease control but would benefit animal welfare, as the commenter stated that animals in these markets are frequently held and killed in an inhumane manner.

If the sale of live birds at public markets is not to be prohibited, the commenter recommended that: 1) Surveillance be increased, 2) housing and welfare conditions be included in the auditing of markets, and 3) no producers be compensated in any way for birds killed for disease control purposes at these high-risk venues.

We are confident that the surveillance mechanisms we have developed in cooperation with States are sufficient to detect any H5/H7 LPAI present in the markets and to allow us to address the disease expeditiously. We do not believe it is necessary to prohibit the sale of poultry at live bird markets where there are appropriate surveillance mechanisms and related disease safeguards available.

With regard to the commenter's recommendations, we have determined that current levels of surveillance are adequate to detect outbreaks of H5/H7 LPAI in live bird markets. While our audits of markets relate only to the prevention of the introduction or spread of disease, live bird markets must comply with all laws and regulations applicable to their operation, including any applicable State animal welfare laws and regulations; we would report circumstances that we know to be violations of such laws and regulations to State authorities. Finally, if a person has complied with all applicable regulations and agreements pertaining to surveillance and biosecurity for H5/H7 LPAI at a live bird market, it would be inappropriate to declare that person ineligible for indemnity, as that person would have incurred costs eligible for indemnity while complying with the regulations. In addition, denying indemnity as the commenter suggests would establish a negative incentive for reporting potential H5/H7 LPAI infection, thus potentially leading to late reporting of H5/H7 LPAI outbreaks and hampering our surveillance efforts. We are making no changes in response to this comment.

This commenter also asked us to regulate the sale of birds in the retail pet industry. At pet stores, the commenter stated, exotic birds from many different geographical locations are mixed together and are often housed in close proximity to domestic fowl in retail pet shops. The commenter believes there are inadequate licensing, regulatory oversight, and recordkeeping requirements to track birds sold in pet shops, and, as a result, APHIS is missing the chance to detect disease early, and control, if not prevent, its spread.

We expect that, under the regulations in 9 CFR parts 56 and 146, any outbreaks of H5/H7 LPAI in commercial poultry would be confined to the premises on which they occur. Our regulations governing the importation of pet birds in 9 CFR part 93 are sufficient to prevent the introduction of LPAI via the importation of pet birds. If H5/H7 LPAI were to spread to pet birds, these birds would be considered infected with or exposed to H5/H7 LPAI under the regulations in 9 CFR part 56 and thus would be subject to the requirements of the relevant State's initial response and containment plan for H5/H7 LPAI. These restrictions on the interstate movement of pet birds are sufficient to prevent the spread of H5/H7 LPAI.

*State H5/H7 Avian Influenza Monitored Classifications*

In the regulations established by the interim rule, subparts B through D of 9 CFR part 146 provide special conditions for participation in the Plan by commercial table-egg layer flocks, commercial meat-type chicken slaughter plants, and commercial meat-type turkey slaughter plants, respectively. Within subparts B and D, §§ 146.24 and 146.44 provide for U.S. H5/H7 Avian Influenza Monitored State classifications for table-egg layers and meat-type turkey slaughter plants; there is no U.S. H5/H7 Avian Influenza Monitored State classification for meat-type chicken slaughter plants in subpart C.

One commenter stated that it seems incongruous not to have a U.S. H5/H7 Avian Influenza Monitored State status for meat-type chickens if it is rational to have such a status for meat-type turkeys.

As we stated in the interim rule, in consultation with our State and industry cooperators, we have determined that it is not necessary to provide for a U.S. H5/H7 Avian Influenza Monitored State classification for meat-type chickens at this time. The regulations for meat-type chicken slaughter plants provide the same level of surveillance as occurs at table-egg layer premises and meat-type turkey slaughter plants, the diagnostic surveillance program required by the regulations covers all poultry in the State, and the regulations in 9 CFR part 56, including the requirement for an initial State response and containment plan for H5/H7 LPAI infections, are sufficient to ensure that H5/H7 LPAI infections in meat-type chickens are handled appropriately. We will continue to examine the issue, and if we determine at some point in the future that it is useful to be able to designate States as U.S. H5/H7 Avian Influenza Monitored, we will implement such a classification.

In the regulations established by the interim rule, § 56.10(b) provides that if a State is designated a U.S. Avian Influenza Monitored State, Layers under § 146.24(a) or a U.S. Avian Influenza Monitored State, Turkeys under § 146.44(a), it will lose that status during any outbreak of H5/H7 LPAI and for 90 days after the destruction and disposal of all infected or exposed birds and cleaning and disinfection of all affected premises are completed.

One commenter asked us to clarify what is meant by an outbreak, and specifically whether the discovery of H5/H7 LPAI in a live bird market would constitute an outbreak that would result in a State losing its U.S. H5/H7 Avian Influenza Monitored State status.

Consistent with the World Organization on Animal Health (OIE) guidelines for AI,[2] we consider any outbreak of H5/H7 LPAI in domesticated poultry to be an outbreak for the purposes of § 56.10(b). This includes live bird markets. However, as indicated in §§ 146.24(a)(2) and 146.44(a)(2), a State will maintain its U.S. H5/H7 Avian Influenza Monitored State status after a single outbreak of H5/H7 LPAI as long as long as the State responds to the outbreak in accordance with 9 CFR part 56, there are not repeated outbreaks, and the outbreak does not spread beyond the originating premises. If any of those circumstances did not occur, APHIS would have grounds to revoke the State status, although APHIS would have to make a thorough investigation and give the State an opportunity for a hearing before doing so.

*Definition of H5/H7 LPAI Virus Infection (Infected)*

The regulations established by the interim rule in §§ 56.1 and 146.1 define *H5/H7 LPAI virus infection (infected)* by stating that poultry will be considered to be infected with H5/H7 LPAI for the purposes of parts 56 and 146 if:

- H5/H7 LPAI virus has been isolated and identified as such from poultry; or
- Viral antigen or viral RNA specific to the H5 or H7 subtype of AI virus has been detected in poultry; or

[2] As found in the Terrestrial Animal Health Code. The guidelines are available on the Internet at (*http://www.oie.int/eng/normes/mcode/en_chapitre_1.10.4.htm*).

• Antibodies to the H5 or H7 subtype of the AI virus that are not a consequence of vaccination have been detected in poultry. If vaccine is used, methods should be used to distinguish vaccinated birds from birds that are both vaccinated and infected. In the case of isolated serological positive results, H5/H7 LPAI infection may be ruled out on the basis of a thorough epidemiological investigation that does not demonstrate further evidence of H5/H7 LPAI infection.

One commenter expressed concern about the last sentence of this definition, which discusses using an epidemiological investigation to determine that no further evidence of H5/H7 LPAI infection exists. The commenter stated that this statement indicates that certain LPAI events that leave evidence of prior infection (seropositivity) can be discounted and may not require any response actions. If this is not the intent of the definition, the commenter stated, we should remove this statement from the regulations. If the statement is not removed, the commenter recommended that comprehensible descriptions of the criteria that must be met in order to discount serological evidence of infection be added to the regulations. The commenter also recommended that the entity responsible for making such determinations be specified.

Our definition in §§ 56.1 and 146.1 is based on the definition provided in the OIE guidelines for AI referred to in this document. We believe it is appropriate to include the provision that allows for ruling out H5/H7 LPAI infection on the basis of a thorough epidemiological investigation. It would be impractical to specify criteria for ruling out H5/H7 LPAI infection on the basis of a thorough epidemiological investigation, as the factors allowing us to make such a determination may vary among outbreaks and among States. Additionally, the OIE guidelines do not specify criteria for making such a determination.

We do, however, agree with the commenter that the entity responsible for making this determination should be specified. We have amended the definitions of *H5/H7 LPAI virus infection (infected)* in §§ 56.1 and 146.1 in this final rule to indicate that APHIS is responsible for making this determination. We believe it will be better to define the criteria for an epidemiological investigation of isolated serological results through APHIS communication with the Official State Agencies and Cooperating State Agencies.

We are making one other change to the definition of *H5/H7 LPAI virus infection (infected)* in this final rule. We are adding a sentence indicating that NVSL makes the final determination that H5/H7 LPAI virus has been isolated and identified, viral antigen or viral RNA specific to the H5 or H7 subtype of AI virus has been detected, or antibodies to the H5 or H7 subtype of AI virus have been detected. This change is intended to clarify for readers who makes an official diagnosis related to the *H5/H7 LPAI virus infection (infected)* definition.

*Official State Agency and Cooperating State Agency Roles in Emergency Response*

The regulations in 9 CFR part 56, which were established by the interim rule, provide for cooperation among APHIS, Official State Agencies, and Cooperating State Agencies in response to disease outbreaks.

The term *Official State Agency* is defined in §§ 146.1 and 56.1 (as well as § 145.1) as the State authority recognized by the Department to cooperate in the administration of the Plan. The term *Cooperating State Agency* is defined in § 56.1 as any State authority recognized by the Department to cooperate in the administration of the provisions of 9 CFR part 56. Such cooperation requires the Cooperating State Agency to have the authority to restrict intrastate movement, conduct cleaning and disinfection, and quarantine premises, among other things. The Cooperating State Agency is typically the State animal health authority.

In some States, the Official State Agency is also the State animal health authority; in some States, the Official State Agency includes representation from, but is not identical to, the State animal health authority. For example, the Official State Agency may include representatives from the poultry industry and from agricultural extension universities in addition to representatives from the State animal health authority. While the expertise of the nongovernmental participants is invaluable in determining how best to respond to an LPAI outbreak, only the State animal health authority has the authority to perform the functions described above in response to an outbreak in accordance with the provisions of part 56. In addition, the regulations in 9 CFR part 56 contains provisions that apply to all poultry, not just the breeding and commercial poultry included in the NPIP programs administered by the Official State Agencies. For poultry not included in those programs, we cooperate with the State animal health authority to eradicate an H5/H7 LPAI outbreak and pay indemnity under part 56. These circumstances necessitated the additional definition of "Cooperating State Agency."

One commenter stated that in several sections of the interim rule relating to activities described in 9 CFR part 56, the regulations should reflect and clearly recognize that in some jurisdictions the Official State Agency is not the responder to or manager of disease events; rather, the Cooperating State Agency is the entity authorized by State law to manage animal diseases of regulatory significance such as AI. Therefore, the commenter stated, disease management actions such as hold orders, quarantined flock management plans, movement restrictions on animals, equipment or supplies, and cleaning and disinfection procedures will be under the direction and control of the Cooperating State Agency.

In the regulations, functions that are analogous to functions carried out by the Official State Agency under the Plan regulations in 9 CFR part 145 have been assigned to the Official State Agency in parts 56 and 146. However, in States where the Cooperating State Agency is different from the Official State Agency, the Cooperating State Agency is the appropriate entity to take on some specific functions for disease control, as the commenter suggests.

The commenter suggested several specific places in which a responsibility or function given to the Official State Agency in the regulations established by the interim rule should be instead assigned to the Cooperating State Agency.

• Paragraphs §§ 146.2(f) and 56.2(c) have stated that States will be responsible for making the determination to request Federal assistance in the event of an outbreak of H5/H7 LPAI. (The "Background" section of the rule erroneously referred to the Official State Agency, but the rule text refers only to "States.") The commenter stated that we should clarify that the Cooperating State Agency, rather than Official State Agency, should make this request for assistance. We agree, and we are making that change to clarify the regulations in this final rule. (This change necessitates adding the definition of *Cooperating State Agency* to § 146.1.)

• Section 56.10 describes the initial State response and containment plans that must be developed for a State and poultry in that State to be eligible for 100 percent indemnity for costs related

to an H5/H7 LPAI outbreak. Paragraph (a) of § 56.10 has stated that the initial State response and containment plan must be developed by the Official State Agency and administered by the Cooperating State Agency of the relevant State. The commenter suggested that the regulations should require that the plan be developed jointly by the Official State Agency and the Cooperating State Agency and implemented by the Cooperating State Agency. The commenter stated that giving the responsibility of developing the plan solely to the Official State Agency is undesirable and might become the root of significant difficulty when the Official State Agency is independent from the Cooperating State Agency, which would create a situation where one entity creates the plan without the authority, resources, or responsibility for executing the plan, after which another agency executes the plan. The commenter stated that involving the responding agency in the development of the response plan should be expected to develop a superior plan to one developed without input from the responders. We agree, and we have amended § 56.10(a) in this final rule. That paragraph now states that the initial State response and containment plan must be developed by the Official State Agency and further provides that, in states where the Official State Agency is different than the Cooperating State Agency, the Cooperating State Agency must also participate in the development of the plan. In addition, we have corrected references to the initial State response and containment plan in paragraphs (a)(2) and (a)(3) of § 56.2 that indicated that the Official State Agency was the sole developer of the initial State response and containment plan.

- The definition of *commercial meat-type flock* in §§ 56.1 and 146.1 allows any group of poultry which is segregated from another group in a manner sufficient to prevent the transmission of H5/H7 LPAI and has been so segregated for a period of at least 21 days to be considered as a separate flock, at the discretion of the Official State Agency. The commenter stated that this discretion should be given to the Cooperating State Agency, due to the emergency response responsibilities of the Cooperating State Agency. We assigned this responsibility to the Official State Agency because it is a type of task that the Official State Agency has typically been responsible for in other NPIP activities, and the definition applies to activities conducted under the NPIP regulations in 9 CFR part 146 as well as in 9 CFR part 56. We are making no changes in response to this comment.
- The regulations established by the interim rule in § 56.1 defined *flock plan* as: "A written flock management agreement developed by APHIS and the Official State Agency with input from the flock owner and other affected parties. A flock plan sets out the steps to be taken to eradicate H5/H7 LPAI from a positive flock, or to prevent introduction of H5/H7 LPAI into another flock. A flock plan shall include, but is not necessarily limited to, poultry and poultry product movement and geographically appropriate infected and control/monitoring zones. Control measures in the flock plan should include detailed plans for safe handling of conveyances, containers, and other associated materials that could serve as fomites; disposal of flocks; cleaning and disinfection; downtime; and repopulation." The commenter stated that the responsibilities discussed in this definition are more properly assigned to the Cooperating State Agency. Again, we assigned this responsibility to the Official State Agency because it is a task that the Official State Agency has typically been responsible for in NPIP activities. We are making no changes in response to this comment.
- The "Background" section of the interim rule stated that, while the provisions of 9 CFR part 146 are APHIS requirements for participation in the Plan, and protocols for sampling, testing, and other surveillance activities must be approved by APHIS, the active and diagnostic surveillance undertaken under part 146 is run by the Official State Agencies in cooperation with poultry producers; the costs of the surveillance are borne by the Official State Agencies as well. The commenter stated that the costs of surveillance are borne by Cooperating State Agencies rather than Official State Agencies. However, the commenter is incorrect. The cost of the routine, active surveillance described in 9 CFR part 146 is, in fact, borne by Official State Agencies and industry when they cooperate to participate in the Plan.

*Vaccination*

In the regulations established by the interim rule, paragraphs (a)(2) and (b)(2) of § 56.2 set out conditions for the transfer of vaccine for H5/H7 LPAI to Cooperating State Agencies, provided that the use of vaccine is included in the initial State response and containment plan, as described in § 56.10(a)(12).

We received one comment that addressed vaccination in general. The commenter strongly supported the use of vaccination as an emergency response for table-egg layer flocks. The commenter recommended that APHIS undertake outreach efforts to remind States that their initial State response and containment plans should request authority to use vaccination in advance, rather than waiting for an outbreak. The commenter also recommended that APHIS notify States that, if they have already submitted initial State response and containment plans that did not include provisions for vaccination, they may amend those plans to include such provisions.

We agree that vaccination has the potential to be a cost-effective method of eradicating H5/H7 LPAI, especially for table-egg layer flocks. Under the regulations, the Official State Agency and Cooperating State Agency for a State will determine whether vaccination is part of the State's initial response and containment plan. APHIS will approve the use of vaccination if the initial State response and containment plan contains appropriate provisions for its use. We encourage States to include provisions allowing for the use of vaccination in their initial State response and containment plans, especially States in which table-egg layer premises are located. We also encourage States to submit updated initial State response and containment plans for APHIS approval if they have new ideas about effective response to and containment of H5/H7 LPAI in their States.

*Payment of Indemnity*

In the regulations established by the interim rule, § 56.3 sets out provisions for payment of indemnity.

One commenter asked generally whether indemnity would be provided if the H5/H7 LPAI virus entered a flock due to illegal activity on the part of the flock owners or manager.

In § 56.9, "Claims not allowed," paragraph (c) prohibits the payment of indemnity for any poultry that become or have become infected with or exposed to H5/H7 LPAI because of a violation of 9 CFR part 56. This provision addresses the commenter's concern.

Paragraph (a) of § 56.3 describes the activities for which the Administrator may pay indemnity. These are:

- Destruction and disposal of poultry that were infected with or exposed to H5/H7 LPAI;
- Destruction of any eggs destroyed during testing of poultry for H5/H7

LPAI during an outbreak of H5/H7 LPAI; and

- Cleaning and disinfection of premises, conveyances, and materials that came into contact with poultry that were infected with or exposed to H5/H7 LPAI or, in the case of materials, if the cost of cleaning and disinfection would exceed the value of the materials or cleaning and disinfection would be impracticable for any reason, the destruction and disposal of the materials.

One commenter recommended that APHIS consider indemnifying any vaccination-related costs that are borne by producers in cases in which vaccination is used as a response to an outbreak of H5/H7 LPAI. The commenter cited possible costs including, but not limited to, labor required both for vaccination and for ongoing surveillance, ultimate disposal costs, and expenses incurred in controlled marketing, such as the need to purchase more packaging materials than normal.

The regulations as established by the interim rule cover the cost of disposal of poultry that were infected with or exposed to H5/H7 LPAI and have been destroyed. The regulations in § 56.2 provide for APHIS to transfer payment to the Cooperating State Agency for administering vaccine and conducting surveillance related to an outbreak of H5/H7 LPAI. APHIS does not believe it is appropriate to provide indemnity for business costs such as the packaging costs cited by the commenter. We are making no changes to the regulations in response to this comment.

One commenter expressed concern that egg producers in the commenter's State might not be able to fulfill the testing requirements necessary to be eligible for 100 percent indemnity.

Under § 56.3(b) of the interim rule, if a table-egg layer premises has 75,000 or more birds, it must participate in the U.S. H5/H7 Avian Influenza Monitored program in § 146.23(a) in order for the poultry on that premises to be eligible for 100 percent indemnity. Table-egg layers on smaller premises are eligible for 100 percent indemnity if the State in which the table-egg layers are located participates in the diagnostic surveillance program as described in § 146.14, and has an initial State response and containment plan that is approved by APHIS under § 56.10. The commenter stated elsewhere that the average commercial layer flock in the commenter's State ranges from 10,000 to 50,000 table-egg layers per farm. Thus, it appears that most table-egg layer premises in that State would not have to participate in the U.S. H5/H7 Avian Influenza Monitored program in § 146.23(a) in order to be eligible for 100 percent indemnity, as long as the State has in place a diagnostic surveillance program and an initial State response and containment plan.

Paragraph (b) of § 56.3 generally provides that establishments above certain size standards must participate in an NPIP AI surveillance program in order to be eligible to receive 100 percent indemnity; otherwise, they are only eligible to receive 25 percent indemnity. However, in the "Background" section of the interim rule, we asked whether it would be appropriate to provide an indemnity incentive for owners of smaller poultry flocks to participate in a State program that has testing requirements equivalent to those in part 146, similar to the incentive we provide for larger flocks to participate in the programs in part 146. Such an incentive, we stated, could encourage owners of smaller flocks to participate in the State AI testing programs designed for those flocks. For example, the regulations could include provisions for APHIS to recognize the testing requirements of State active surveillance programs as equivalent to the testing requirements for the H5/H7 LPAI surveillance programs in part 146. We could then provide that if infected or exposed poultry are eligible to participate in an equivalent active surveillance program, but do not participate in that program, we would pay indemnity for less than 100 percent of costs related to an H5/H7 LPAI outbreak in those poultry

We invited public comment on:

- Whether we should recognize State AI surveillance programs for smaller poultry flocks or other types of poultry as equivalent to the NPIP surveillance programs in part 146;
- If so, which programs we should recognize; and
- What changes in the regulations may be appropriate to provide poultry owners with an incentive to participate in State AI surveillance programs.

One commenter, from a State department of agriculture, stated that its surveillance program would likely be considered equivalent to the requirements in part 146 and that recognizing equivalent programs for indemnity purposes would encourage many backyard flocks to participate in such State surveillance programs. The commenter stated that any program that encourages bird owners to monitor for AI is valuable not only for the surveillance information it provides, but also as another opportunity to educate individuals engaged in backyard and other alternative production methods about biosecurity and good management practices.

We appreciate the commenter addressing the issues we raised in the interim rule. After considering the possible implications of recognizing State surveillance plans as equivalent for the purposes of establishing an indemnity incentive, however, we have decided not to do so in this final rule. While the NPIP active surveillance plans are appropriate for any flock or slaughter plant that is larger than the size standards promulgated in the interim rule, it is less clear that it would be possible to design an active surveillance program that was appropriate for flocks that are smaller than those same size standards. Indeed, in practice, State programs for flocks and slaughter plants smaller than the size standards in the interim rule typically focus on diagnostic surveillance, such as testing birds that have clinical symptoms consistent with AI, rather than actively testing a certain number of birds from each participating flock for AI. Diagnostic surveillance activities in State surveillance programs are typically in line with the diagnostic surveillance program required for participating States under § 146.14.

Rather than establish an indemnity incentive for flocks and slaughter plants that are smaller than the size standards in part 146 to participate in State surveillance programs, we prefer to conduct outreach to owners of such flocks and slaughter plants to encourage them to practice appropriate biosecurity and to promptly report clinical symptoms consistent with AI. We would also encourage owners of flocks or slaughter plants that are smaller than the size standards to participate in any State AI surveillance programs that are available to them. (As noted earlier, commercial table-egg laying premises with fewer than 75,000 birds, meat-type chicken slaughter plants that slaughter fewer than 200,000 meat-type chickens in an operating week, and meat-type turkey slaughter plants that slaughter fewer than 2 million meat-type turkeys in a 12-month period are not required to participate in the active surveillance programs in subparts B, C, and D of 9 CFR part 146 in order to receive 100 percent indemnity.)

We are making changes to paragraph (b)(7) in § 56.3 in this final rule. This paragraph has stated that poultry will be eligible for 25 percent indemnity if they are associated with a flock or slaughter plant that participates in the Plan, but they are located in a State that does not participate in the NPIP diagnostic surveillance program for H5/H7 LPAI, as described in § 146.14 of this chapter,

or that does not have an initial State response and containment plan for H5/H7 LPAI that is approved by APHIS. They may be eligible for 100 percent indemnity, however, if they participate in the Plan with another State that does participate in the NPIP diagnostic surveillance program for H5/H7 LPAI, as described in § 146.14 of this chapter, and has an initial State response and containment plan for H5/H7 LPAI that is approved by APHIS.

It is important to note that, under § 56.3(b)(7), poultry that do not participate in the Plan and do not meet the size standards in paragraphs (b)(4) through (b)(6) of § 56.3 have been eligible for 100 percent indemnity even if the State in which they are located does not have a diagnostic surveillance program or an initial State response and containment plan. Since the publication of the interim rule, we have reviewed this provision and found that its inclusion is inconsistent with the rationale we gave in the interim rule for providing for the payment of 100 percent indemnity in certain circumstances.

In the "Background" section of the interim rule, we stated that providing for the payment of 100 percent of eligible costs is appropriate because participants in the H5/H7 LPAI control program established by the interim rule assume an economic burden in complying with the requirements of the control program. The requirements of the control program make it more likely that an outbreak of H5/H7 LPAI will be quickly detected and contained; this would tend to lower the amount of indemnity APHIS may have to pay, but the cost of participating in the program is mostly borne by producers and Official State Agencies.

However, States that do not have a diagnostic surveillance program and an initial State response and containment plan have not assumed the economic burden of participation in the control program. Because they have not set up an infrastructure by which producers can participate in the control program, the producers in those States do not assume costs related to the control program either, unless they participate in the Plan with another State that has the required diagnostic surveillance program and initial State response and containment plan. We did not intend to provide that producers in States without diagnostic surveillance programs or without initial State response and containment plans would be eligible for 100 percent indemnity. Accordingly, we are amending paragraph (b)(7) in § 56.3 to indicate that the Administrator is authorized to pay indemnity for only 25 percent of the costs associated with any infected or exposed poultry located in a State without a diagnostic surveillance program or an initial State response and containment plan, unless they participate with another State as described earlier.

We are also amending § 56.3(b)(7) to refer simply to a diagnostic surveillance program, rather than a "National Poultry Improvement Plan diagnostic surveillance program," as the regulations in § 146.14 require that the diagnostic surveillance program encompass all poultry, not just NPIP flocks.

Paragraph (c) of § 56.3 states that if the recipient of indemnity for any of the activities listed in paragraphs (a)(1) through (a)(3) of § 56.3 also receives payment for any of those activities from a State or from other sources, the indemnity provided under this part will be reduced by the total amount of payment received from the State or other sources.

One commenter stated that some States have producer or government-funded programs that provide funds to be made available in the case of an AI infection. Most of these types of programs, the commenter stated, include a provision requiring the local monies to be returned to the local source if Federal or other funds are later available to indemnify the affected parties. The purpose of these local funds is to provide a much quicker response than possible under the Federal program. The commenter recommended that the Federal program acknowledge that such funds exist and provide that the recipients of these funds will not have their Federal indemnity reduced as long as the local indemnity funds are ultimately returned to the local source.

We may provide the full indemnity for which the poultry are eligible to poultry owners who have received indemnity from State or industry sources, as long as the owner provides us with proof that the indemnity received from those sources has been returned to its source. A receipt from the payer of the indemnity that was previously received would be one such proof. It is not necessary to amend the regulations to accommodate this process, as if the indemnity funds received have been returned, the provision in § 56.3(c) no longer applies.

*Determination of Indemnity Amounts and Appraisals*

In the regulations established by the interim rule, § 56.4 described the process by which indemnity amounts would be determined, including the appraisal process. We received several comments on the appraisal process.

One commenter stated that a complicated appraisal process should never be allowed to interfere with the prompt eradication of disease. As the regulations are written, the commenter stated, no depopulation could occur until the official appraiser has completed the paperwork and signed off on the appropriate form with the owners' and mortgagees' (if necessary) signatures. However, the commenter stated, in reality there are very few USDA appraisers; if the State's appraisal system is not permitted to be used, then actions to control the H5/H7 LPAI outbreak could be delayed. The commenter noted that this could have a negative effect on poultry production in the entire State in which the outbreak occurred, as the 90 days that must elapse before U.S. Avian Influenza Monitored State status can be restored does not begin until the birds are depopulated and the premises are cleaned and disinfected.

The commenter had two suggestions for how to address the problem. One was to have pre-approved State and Federal appraisers in every State. Another suggestion was to have a prescribed list of information that must be collected concerning each flock prior to depopulation which the USDA appraiser could use after the fact to calculate an exact dollar amount.

We appreciate the commenter's concerns and share a desire to ensure that the appraisal process does not hinder response efforts for a disease outbreak. The regulations established by the interim rule in § 56.4(a) and (b) include statements that appraisals of poultry or eggs must be signed by the owners of the poultry prior to the destruction of the poultry or eggs, unless the owners, APHIS, and the Cooperating State Agency agree that the poultry may be destroyed immediately. (The interim rule neglected to include a similar statement in § 56.4(c)(2) regarding the appraisal process for materials for which the cost of cleaning and disinfection would exceed the value of the materials or cleaning and disinfection would be impracticable for any reason. We are correcting that omission in this final rule.) We believe this provision addresses the commenter's concern.

We agree that having a list of pre-approved appraisers would be useful, and we are working to develop one to improve our response efforts for all diseases, not just H5/H7 LPAI.

With regard to the commenter's second suggestion, we typically conduct appraisals for poultry by reviewing

documentation regarding their production, rather than by visual inspection. The appraisal estimate is based on the cost of inputs used during the production process (e.g., feed, shelter, labor) and the current market price of the relevant poultry or outputs. A more detailed discussion can be found in the full economic analysis that accompanied the interim rule, which is available on Regulations.gov (see footnote 1 in this document for a link to the economic analysis on Regulations.gov).

One commenter stated that if a flock owner voluntarily destroys a flock prior to confirmation of infection, there should be a means for a Cooperating State Agency to verify the number and type of poultry and eggs destroyed, so that indemnity may be paid after the infection has been confirmed and an appraisal made.

Only poultry that have been infected with or exposed to H5/H7 LPAI are eligible for indemnity under 9 CFR part 56. Under the definition of *H5/H7 LPAI exposed*, poultry can be determined to be exposed to H5/H7 LPAI if there is a reason to believe that association has occurred with H5/H7 LPAI or vectors of the virus by the Cooperating State Agency and confirmed by APHIS. Absent our determination that poultry were infected with or exposed to H5/H7 LPAI, we will not authorize the payment of indemnity for the destruction and disposal of that poultry.

As noted earlier, for poultry that are infected with or exposed to H5/H7 LPAI, we will use records of production to determine how much indemnity should be paid.

In § 56.4, paragraph (a)(1) states that, for laying hens, the appraised value should include the hen's projected future egg production. One commenter agreed with this provision but recommended that the appraisal should also take into account whether the hen would have undergone a molt had she not been euthanized. The commenter stated that not all flocks are molted, but those that are have a longer productive life — typically 110-115 weeks rather than approximately 80 weeks.

The commenter is correct that molted hens have a longer productive life than hens that are not molted. However, there would be considerable difficulties in determining whether a hen would have been molted and properly valuing the hen based on that information.

Based on industry figures for hen values, the appraised value of a hen starts out low for a day-old chick, increases as the bird grows, and reaches a maximum soon after egg laying begins. As eggs are laid, the hen's value declines. When molting takes place, the hen's value increases during the molting phase, followed by a decline in value as eggs are laid. The process repeats itself for a second molt.

If we were to adopt the commenter's recommendation, our appraisal model would not increase the value of a hen in its molting phase, but would have to assign that increase in value to the initial lay. This would result in no increase in value for hens in the molting phase, which would mean that our appraisal values of a hen in the molting phase would not reflect the fair market value of the hen. In addition, if we made the change suggested by the commenter, we would have to take the owner's word for whether the hen was to be molted, meaning the owner would have a strong incentive to state that the hen would be molted, thus increasing the hen's value, regardless of the actual plans for molting. We have determined that our present valuation model for hens more accurately determines their fair market value, as required by the Animal Health Protection Act. We are making no changes in response to this comment.

In § 56.4, paragraph (a)(2) sets out the conditions for determining the amount of indemnity paid for disposal of poultry. The conditions include a requirement that any disposal of poultry infected with or exposed to H5/H7 LPAI for which indemnity is requested must be performed under a compliance agreement between the claimant, the Cooperating State Agency, and APHIS.[3] Paragraph (c)(1) sets out the conditions under which the amount of indemnity paid for cleaning and disinfection will be determined; similarly, the conditions include a requirement that any cleaning and disinfection of premises, conveyances, and materials for which indemnity is requested must be performed under a compliance agreement between the claimant, the Cooperating State Agency, and APHIS.

One commenter stated that requiring that completed, signed appraisal documents and a written compliance agreement be in place prior to disposal of infected poultry would severely hamper efforts to quickly and effectively deal with the infection. The commenter recommended that we recognize as adequate any disposal activities undertaken under the approved initial State response and containment plan. The commenter also stated that cleaning and disinfection should be allowed to commence without a compliance agreement as long as a Cooperating State Agency oversees and directs the work and documentation of expenses is provided. In the event of a disputed claim, the commenter stated, a process for resolving differences should be provided.

The regulations require that the destruction and disposal of the indemnified poultry be conducted in accordance with the initial State response and containment plan for H5/H7 LPAI. Similarly, the regulations indicate that APHIS will review claims for indemnity for cleaning and disinfection to ensure that all expenditures relate directly to activities described in § 56.5 and in the initial State response and containment plan described in § 56.10.

Allowing disposal of infected poultry or cleaning and disinfection to begin without a compliance agreement in place, but promising to pay indemnity for expenses related to these activities, would amount to approving expenditures on APHIS' behalf without having a mechanism in place by which APHIS can provide oversight. This could create disputes regarding the payment of indemnity. Our oversight of activities for which we pay indemnity is essential to the responsible use of funds made available to APHIS for indemnity.

Based on previous disease response efforts, including the effort to eradicate exotic Newcastle disease outbreaks in 2002-2003, we are confident that we can conclude compliance agreements with States and flock owners with sufficient timeliness to ensure an effective disease response.

One commenter had two comments about how the provisions in § 56.9, "Claims not allowed," relate to the provisions in § 56.4.

Paragraph (a) of § 56.9 states that the USDA will not allow claims arising out of the destruction of poultry unless the poultry have been appraised as prescribed in part 56 and the owners have signed the appraisal form indicating agreement with the appraisal amount as required by § 56.4(a)(1). The commenter asked whether the poultry could be appraised after they are destroyed based on the information collected by the Cooperating State Agency prior to their destruction.

We expect to use a process in which birds are destroyed and appraisal is performed after destruction in some cases, regardless of whether the Cooperating State Agency or APHIS collects the necessary information for the appraisal. This is why the regulations in § 56.4(a)(1) provide that poultry may be destroyed before the owners of the poultry sign their

[3] Two sentences in § 56.4(a)(2) as it was established by the interim rule incorrectly referred to "compensation" rather than "indemnity." We are correcting the error in this final rule.

appraisals if the owners, APHIS, and the Cooperating State Agency agree that the poultry may be destroyed immediately.

Paragraph (b) of § 56.9 states that the USDA will not allow claims arising out of the destruction of poultry unless the owners have signed a written agreement with APHIS in which they agree that if they maintain poultry in the future on the premises used for poultry for which indemnity is paid, they will maintain the poultry in accordance with a plan set forth by the Cooperating State Agency and will not introduce poultry onto the premises until after the date specified by the Cooperating State Agency.

The commenter stated that this requirement was inconsistent with the provisions in § 56.4 that require a compliance agreement to be in place for the disposal of poultry and for cleaning and disinfection, and that both paragraphs should simply require an agreement rather than a compliance agreement.

The two requirements refer to two different agreements. The requirement in § 56.9(b) refers to an agreement for maintenance and repopulation of the flock, while the requirements in § 56.4 refer to a compliance agreement under which APHIS will pay for cleaning and disinfection work that APHIS does not perform. As stated earlier, we are confident that we can conclude the necessary compliance agreements promptly under disease emergency conditions, based on past experience.

*Destruction and Disposal of Poultry and Cleaning and Disinfection of Premises, Conveyances, and Materials*

In the regulations established by the interim rule, § 56.5 sets out provisions relating to the destruction and disposal of poultry and cleaning and disinfection of premises, conveyances, and materials. Paragraph (a) of § 56.5 sets out the factors on which the Cooperating State Agency and APHIS will base their selection of a method of destruction for poultry. These factors include:

- The species, size, and number of the poultry to be destroyed;
- The environment in which the poultry are maintained;
- The risk to human health or safety of the method used;
- Whether the method requires specialized equipment or training;
- The risk that the method poses of spreading the H5/H7 LPAI virus;
- Any hazard the method could pose to the environment;
- The degree of bird control and restraint required to administer the destruction method; and
- The speed with which destruction must be conducted.

Three commenters stated that the welfare of the poultry to be destroyed should be a consideration in our selection of methods for the destruction of poultry. Two note that the OIE has recently published animal welfare guidelines that recommend that, when "animals are killed for disease control purposes, methods used should result in immediate death or immediate loss of consciousness lasting until death; when loss of consciousness is not immediate, induction of unconsciousness should be non-aversive and should not cause anxiety, pain, distress or suffering in the animals." These commenters recommended that we adopt the OIE guidelines on this issue in the regulations.

One of these commenters stated that the USDA has made efforts to include animal welfare issues in its highly pathogenic avian influenza (HPAI) response plan, including permitting only methods approved by the American Veterinary Medical Association and holding discussions with scientists and animal protection organizations to consider the suffering inflicted by various destruction methods. The commenter expressed surprise that we did not address these issues in the same manner in the LPAI regulations, especially since unlike HPAI, which has not struck the United States in many years, LPAI outbreaks are regularly detected, and each outbreak typically requires the destruction of entire flocks of birds, which can number in the tens of thousands. The commenter stated that the sheer magnitude of the number of animals involved makes it ethically incumbent upon responsible authorities to minimize their suffering.

The commenters also made recommendations regarding destruction methods that could minimize the pain and suffering of the destroyed poultry. One commenter attached a paper addressing the topic. Another recommended the use of inert gases, particularly in cases where sheds cannot be sealed properly (for example, with table-egg layers or breeding poultry), discussed conditions that should apply to the use of carbon dioxide, and recommended that other methods not be used. A third commenter agreed on the suitability of inert gases and specifically recommended that we not use foam to destroy poultry.

We agree with the commenters that it is appropriate to take the humaneness of a destruction method into account when determining what destruction method to use. Accordingly, this final rule adds "Consistency of the method with humane euthanasia guidelines" as an additional factor to be considered when selecting the destruction method in § 56.5(a).

We appreciate the information the commenters supplied on specific destruction methods, and we will take it into consideration when determining what destruction method to use during an LPAI outbreak.

Paragraph (c) of § 56.5 sets out conditions under which controlled marketing may occur. The interstate movement of poultry that has been infected with or exposed to H5/H7 LPAI for controlled marketing may occur only at the discretion of the Cooperating State Agency and APHIS and only if the initial State response and containment plan described in § 56.10 provides for it. In addition, controlled marketing may only occur in accordance with the following requirements:

- Poultry infected with or exposed to H5/H7 LPAI must not be transported to a market for controlled marketing until 21 days after the acute phase of the infection has concluded, as determined by the Cooperating State Agency in accordance with the initial State response and containment plan described in § 56.10; and
- Within 7 days prior to slaughter, each flock to be moved for controlled marketing must be tested for H5/H7 LPAI using a test approved by the Cooperating State Agency and found to be free of the virus.

These restrictions ensure that poultry that are moved for controlled marketing do not pose a risk of spreading H5/H7 LPAI.

One commenter asked whether the requirements in this paragraph refer only to poultry flocks that participate in the Plan or to any poultry. Specifically, the commenter asked whether a State could allow poultry from an H5/H7 LPAI positive live bird market to be sold for several days prior to depopulation and cleaning and disinfection, a process known as "selldown."

Poultry that have been moved to a live bird market for sale have already reached the end of the marketing cycle, and thus would not need to be moved for controlled marketing; they are already at a market and being sold directly to consumers. Therefore, the controlled marketing requirements do not apply to the sale of poultry at live bird markets. However, the movement of these infected or exposed birds would be restricted under the initial State response and containment plan.

Paragraph (c)(2) of § 56.5 indicates that poultry moved for controlled marketing will not be eligible for

indemnity under § 56.3. Since the publication of the interim rule, outbreaks of H5/H7 LPAI have occurred in which producers sold infected or exposed birds through controlled marketing. Indemnity was not paid for the poultry themselves, but the regulations were unclear on whether we would pay indemnity for costs related to cleaning and disinfection of premises, conveyances, and materials that came into contact with poultry that are moved for controlled marketing.

Although producers who move infected or exposed poultry interstate for controlled marketing are able to recoup the cost of production of the poultry through their sale, they still incur costs relating to cleaning and disinfection, which after an H5/H7 LPAI outbreak must be more thorough than typical cleaning and disinfection. Therefore, in this final rule, we are adding a provision to this paragraph indicating that costs related to cleaning and disinfection of premises, conveyances, and materials that came into contact with poultry that are moved for controlled marketing will be eligible for indemnity. This provision is intended to provide additional clarity.

Paragraph (d) in § 56.5 sets out guidelines for the development of a cleaning and disinfection plan for a premises and for the materials and conveyances on that premises. Cleaning and disinfection must be performed in accordance with the initial State response and containment plan described in § 56.10, which must be approved by APHIS. One commenter had several comments on paragraph (d).

Paragraph (d)(1)(i) of § 56.5 provides guidance to secure and remove all feathers that might blow around outside the house in which the infected or exposed poultry were held by raking them together and burning the pile.

The commenter stated that this action may be in violation of applicable environmental regulations.

In response to this comment, we are including a general statement at the beginning of paragraph (d) that indicates that all cleaning and disinfection activities must comply with Federal, State, and local environmental regulations.

It is important to note that paragraph (d) is intended to provide guidelines for the development of a cleaning and disinfection plan; if some aspect of the guidelines in paragraph (d) is not applicable to a specific State or locality, or to the poultry operations affected by an LPAI outbreak, a State has the option to address cleaning and disinfection differently in its initial State response and containment plan.

The commenter also noted that there is no alternate feather disposal option presented, e.g., composting, burial in approved locations, onsite treatment, or secure transport to offsite landfill or treatment.

As stated in the regulations, paragraph (d) of § 56.5 provides guidelines for the development of a cleaning and disinfection plan for a premises and for the materials and conveyances on that premises. The feather disposal method provided in the regulations is not the only possible effective method, and other methods may be appropriate in certain situations. In the event of an H5/H7 LPAI outbreak, APHIS reserves the option to approve another disposal method if a State requests it and we determine the disposal method to be effective. It is not necessary to set out all potentially appropriate feather disposal methods in the guidelines in paragraph (d).

Paragraph (d)(1)(iii) of § 56.5 provides guidance to close the house (except for allowing enough ventilation to remove moisture) for a minimum of 21 days following application of insecticides and rodenticides to allow as much H5/H7 LPAI virus as possible to die a natural death. The commenter stated that there is no mention made of concurrent in-house composting or whether there is initial raising of the in-house temperature and that allowing the house sit for 21 days in a cold, moist environment may do little to reduce the LPAI virus titer in the house.

We had intended for composting to be performed during the 21-day period after the closing of the poultry house. We have amended paragraph (d)(1)(iii) to reflect that. We are also amending paragraph (d)(1)(iii) to indicate that the house should be heated to 100 °F before beginning in-house composting.

Paragraph (d)(1)(iv) of § 56.5 provides guidance to heat the house to 100 °F for 72 hours prior to cleaning and disinfection. The commenter stated that it appears that this temperature raising occurs after the 21-day downtime and prior to litter removal or in-house composting. It is unclear, the commenter stated, whether this temperature recommendation is based on acceptable field test data specific for the LPAI virus. If raising the temperature occurs prior to removal or composting of litter, the litter might act as a blanket to protect the virus from the heat. The commenter stated that raising the temperature to the indicated level at the start of composting rather than at the end will accelerate the in-house composting process and will aid in the natural die-off of the LPAI virus in the poultry house during the 21-day downtime.

These comments are addressed by the change discussed previously.

The commenter also stated that there is no guidance provided as to how to deal with a house with open sides in a cold environment.

The guidelines in paragraph (d) are intended to address the most common situations associated with commercial poultry production. Houses with open sides are typically not used in commercial poultry production, as open sides put the poultry within at risk of infection by wild birds. In the event of an H5/H7 LPAI outbreak, APHIS reserves the option to approve another composting method if a State requests it and we determine the disposal method to be effective; a composting method approved in this manner would also be an approved activity for indemnity payment purposes, as would any other cleaning and disinfection provision used to deal with an unusual situation. It is not necessary to set out all potentially appropriate composting methods in the guidelines in paragraph (d).

Paragraph (d)(2)(i) of § 56.5 provides guidance to clean up or compost all manure, debris, and feed in the house if possible before cleaning and disinfection. The commenter stated that it is not clear whether this composting should occur at the start of the 21-day pre-cleaning and disinfection period.

Under these guidelines, all material in the house would be composted during the 21-day pre-cleaning and disinfection period, after which any manure, debris, and feed would undergo an additional composting.

Paragraph (d)(2)(i) also indicates that equipment should be washed and disinfected. The commenter stated that the regulations should more appropriately provide guidance to clean and disinfect equipment.

We agree, and we have made this change in the final rule.

Paragraph (d)(2)(ii) of § 56.5 provides guidance to spray contaminated surfaces with soap and water. The commenter stated that it may have been more appropriate to indicate instead spraying with detergent (rather than soap) and water. Also, the commenter stated, the guidance should indicate that detergent should be rinsed with fresh water to prevent a potentially negative interaction between the detergent and the successively applied disinfectant.

We agree with the commenter, and we have made the suggested changes.

Paragraph (d)(2)(iii) of § 56.5 provides guidance to use disinfectants authorized by 9 CFR 71.10(a). The commenter

stated that this reference to 9 CFR 71.10(a) may be inappropriate as cresylic disinfectants, liquefied phenol, chlorinated lime, and sodium hydroxide are not present as active ingredients on the labels of any current registered AI virus disinfectant, nor is there any exemption present to use Environmental Protection Agency (EPA)-registered tuberculocidal disinfectants against AI virus. The commenter stated further that there is no recommendation to use any of the approximately 100 EPA-registered AI virus disinfectants as per label instructions or a disinfectant approved by the EPA for use under a Federal Insecticide, Rodenticide, and Fungicide Act (FIFRA) section 18 exemption.

We agree with the commenter, and we have amended the regulations to refer to a disinfectant registered with the EPA for AI virus per label instructions or a disinfectant approved by the EPA for use under a FIFRA section 18 exemption, instead of referring to a disinfectant authorized by § 71.10(a).

The commenter also stated that there is no guidance on how to disinfect surfaces that are prevalent in poultry houses but are not considered as nonporous, e.g., cement, concrete, wood, clay, etc., as there are no EPA-registered disinfectants and there is no authorization from EPA to treat surfaces that are not considered nonporous with disinfectant.

We would not use a disinfectant on any surface on which its use is not authorized by its EPA label. We have added text to paragraph (d)(2)(iii) of § 56.5 to clarify this issue. Given the diversity of construction in commercial poultry houses, disinfection of surfaces considered to be nonporous will need to be addressed in each individual State's initial State response and containment plan, rather than in the guidelines in paragraph (d).

*Conditions For Payment to Contractors*

In the regulations established by the interim rule, § 56.8 provides that when poultry or eggs have been destroyed pursuant to part 56, the Administrator may pay claims to any party with which the owner of the poultry or eggs has entered into a contract for the growing or care of the poultry or eggs. Section 56.8 also sets out a formula for calculating the proportion of indemnity paid to the owner of poultry or eggs destroyed under part 56 that may be paid to the contract grower:

- The value of the contract the owner of the poultry or eggs entered into with another party for the growing or care of the poultry or eggs in dollars is divided by the duration of the contract as it was signed prior to the H5/H7 LPAI outbreak in days.
- This figure is multiplied by the time in days between the date the other party began to provide services relating to the destroyed poultry or eggs under the contract and the date the birds were destroyed due to H5/H7 LPAI.

If compensation is paid to a grower under § 56.8, the owner of the poultry or eggs will be eligible to receive the difference between the indemnity paid to the growers and the total amount of indemnity that may be paid for the poultry or eggs.

These regulations work well for the contract grower model prevalent in the meat-type poultry industry, where contract growers are typically paid on delivery of the poultry and in which the poultry increase in value over time until they are ready for sale in the market. However, since the publication of the interim rule, we reviewed these provisions and found that they are less suitable for contract growers maintaining egg-laying birds (table-egg layers and breeding poultry). Such growers are typically compensated at set intervals during the contract (either weekly or monthly). Under the regulations as established by the interim rule, growers could receive payment for their labor both from the owner and from APHIS if poultry in their care were destroyed due to infection with or exposure to H5/H7 LPAI after growers had already received a payment from the poultry owner.

Therefore, in this final rule, we are adding a provision to the regulations in § 56.8 indicating that if a contract grower receiving indemnity under § 56.8 has received any payment under his or her contract from the owner of the poultry at the time the poultry are destroyed, the amount of indemnity for which the contract grower is eligible will be reduced by the amount of the payment the contract grower has already received.

*Miscellaneous Changes*

The interim rule stated that the information collection and recordkeeping requirements included in the interim rule had been submitted for emergency approval to the Office of Management and Budget (OMB). Since the publication of the interim rule, we received approval for those information collection and recordkeeping requirements, as well as a paperwork control number for those requirements. The OMB control number for the information collection associated with this rule is 0579-0007. In this final rule, we are adding the paperwork control number to the sections of the regulations established by the interim rule that contain information collection and recordkeeping requirements. These sections are §§ 56.4, 56.6, 56.7, 56.9, 146.4, 146.11, 146.13, 146.14, 146.24, and 146.44.

We are also making minor, nonsubstantive corrections and changes.

Therefore, for the reasons given in the interim rule and in this document, we are adopting the interim rule as a final rule, with the changes discussed in this document.

This final rule also affirms the information contained in the interim rule concerning Executive Order 12372.

**Effective Date**

Pursuant to the administrative procedure provisions in 5 U.S.C. 553, we find good cause for making this rule effective less than 30 days after publication in the **Federal Register**. The interim rule adopted as final by this rule became effective on September 26, 2006. This rule amends the interim rule to provide that the amount of indemnity for which contract growers are eligible will be reduced by any payment they have already received on their contracts when poultry in their care are destroyed, to clarify the roles of cooperating State agencies with respect to H5/H7 low pathogenic avian influenza outbreaks, to provide that the welfare of poultry to be destroyed will be considered when selecting a method for the destruction of poultry, and to provide additional guidance for cleaning and disinfecting an affected premises in the interim rule. Immediate action is necessary to make these changes in order to help ensure that the H5/H7 subtypes of low pathogenic avian influenza are detected and eradicated when they occur within the United States. Therefore, the Administrator of the Animal and Plant Health Inspection Service has determined that this rule should be effective upon publication in the **Federal Register**.

**Executive Order 12866 and Regulatory Flexibility Act**

This final rule has been determined to be significant for the purposes of Executive Order 12866 and, therefore, has been reviewed by the Office of Management and Budget.

In accordance with 5 U.S.C. 604, we have performed a final regulatory flexibility analysis, which is summarized below, regarding the economic effects of this rule on small entities. Copies of the full analysis are available on the Regulations.gov Web site (see footnote 1 in this document for a link to Regulations.gov) or by

contacting the person listed under **FOR FURTHER INFORMATION CONTACT**.

Under the interim rule, the USDA established a voluntary control program for H5/H7 LPAI. As part of the program, participating owners and growers are indemnified for losses arising from depopulation of birds affected with H5/H7 LPAI.

In general, benefits of containing the spread of a livestock or poultry disease fall into three categories: 1) Avoided producer losses from disease morbidity and mortality; 2) avoided consumer losses due to price increases resulting from decreased supplies (net of avoided gains to producers attributable to the price increases); and 3) avoided reduced demand if markets are closed to affected commodities. LPAI is rarely fatal to infected birds. However, the longer an outbreak is not controlled, with more birds becoming infected with H5/H7 LPAI, the more likely it is that the virus may mutate into a highly pathogenic form. The more timely and well-planned the response to an LPAI occurrence, the less likely it will result in harmful price and trade effects. This final rule has the objectives of reducing the risk of H5/H7 LPAI outbreaks and improving responsiveness and eradication measures at the grower, industry, and State levels when the disease does occur.

The groups who enjoy the primary benefit of a disease eradication campaign are consumers and those owners/growers whose flocks have remained healthy. Owners and growers of the depopulated flocks bear the primary burden of an eradication effort, if not indemnified. In addition to the value of lost production, the owners/growers of affected birds may also bear costs of cleanup, disinfection, transportation, forgone income, and other financial hardships. The benefits of a voluntary avian influenza control program derive from disease prevention and from cost minimization when an outbreak does occur. Evidence of the types of benefits gained from control of avian influenza is found in a USDA-Economic Research Service study of a 1983-84 outbreak.[4] A 2002 outbreak in Virginia also exemplifies the types of costs incurred due to an avian influenza incident. While these occurrences show that the costs of an avian influenza outbreak can be substantial, recent outbreaks have typically been smaller in scale. An ongoing surveillance program contributes to our ability to detect outbreaks early and limit their effects.

To the extent that the final rule contributes to the elimination of AI, all affected entities should benefit over the long term. The program that APHIS is establishing is a voluntary program; producers are not required to participate. The benefits of this rule, from preventing LPAI outbreaks and minimizing losses should an outbreak occur, are expected to exceed costs to producers and States of participating in the program's disease prevention efforts.

Under the rule, producers will be required to keep flocks and facilities clean, slaughter plants will be required to conduct sampling, and States will be required to conduct annual inspections and develop response and containment plans. APHIS will provide full indemnities for specific costs to participating producers and States should an outbreak occur.

The final rule explicitly provides indemnity for cleaning and disinfection in the case of birds moved for controlled marketing. Since the interim rule was implemented, APHIS has paid these costs on a few occasions. These costs vary widely. The variations may be attributed to factors such as the type of production, where the operation is located, the size of the operation, the company involved in the cleaning and disinfection, as well as other factors.

**Executive Order 12988**

This final rule has been reviewed under Executive Order 12988, Civil Justice Reform. This rule: (1) Has no retroactive effect; and (2) does not require administrative proceedings before parties may file suit in court challenging this rule.

**Paperwork Reduction Act**

In accordance with the Paperwork Reduction Act of 1995 (44 U.S.C. 3501 *et seq.*), the information collection or recordkeeping requirements included in the interim rule have been approved by the Office of Management and Budget (OMB) under OMB control number 0579–0007.

**E-Government Act Compliance**

The Animal and Plant Health Inspection Service is committed to compliance with the E–Government Act to promote the use of the Internet and other information technologies, to provide increased opportunities for citizen access to Government information and services, and for other purposes. For information pertinent to E-Government Act compliance related to this rule, please contact Mrs. Celeste Sickles, APHIS' Information Collection Coordinator, at (301) 851-2908.

**List of Subjects**

*9 CFR Part 56*

Animal diseases, Indemnity payments, Low pathogenic avian influenza, Poultry.

*9 CFR Part 146*

Animal diseases, Poultry and poultry products, Reporting and recordkeeping requirements.

■ Accordingly, the interim rule amending 9 CFR parts 53, 56, 145, 146, and 147 that was published at 71 FR 53601-56333 on September 26, 2006, is adopted as a final rule with the following changes:

## PART 56—CONTROL OF H5/H7 LOW PATHOGENIC AVIAN INFLUENZA

■ 1. The authority citation for part 56 continues to read as follows:

**Authority:** 7 U.S.C. 8301-8317; 7 CFR 2.22, 2.80, and 371.4.

■ 2. Section 56.1 is amended by revising the definition of *H5/H7 LPAI virus infection (infected)* to read as follows:

**§ 56.1 Definitions.**

* * * * *

*H5/H7 LPAI virus infection (infected).* (1) Poultry will be considered to be infected with H5/H7 LPAI for the purposes of this part if:

(i) H5/H7 LPAI virus has been isolated and identified as such from poultry; or

(ii) Viral antigen or viral RNA specific to the H5 or H7 subtype of AI virus has been detected in poultry; or

(iii) Antibodies to the H5 or H7 subtype of the AI virus that are not a consequence of vaccination have been detected in poultry. If vaccine is used, methods should be used to distinguish vaccinated birds from birds that are both vaccinated and infected. In the case of isolated serological positive results, H5/H7 LPAI infection may be ruled out on the basis of a thorough epidemiological investigation that does not demonstrate further evidence of H5/H7 LPAI infection, as determined by APHIS.

(2) The official determination that H5/H7 LPAI virus has been isolated and identified, viral antigen or viral RNA specific to the H5 or H7 subtype of AI virus has been detected, or antibodies to the H5 or H7 subtype of AI virus have been detected may only be made by the National Veterinary Services Laboratories.

* * * * *

**§ 56.2 [Amended]**

■ 3. Section 56.2 is amended as follows:

[4] Lasley, F. A., Short, S. D., and Henson, W. L. 1985. Economic Assessment of the 1983-84 Avian Influenza Eradication Program. USDA, ERS, National Economics Division.

■ a. In paragraphs (a)(2) and (a)(3), by removing the words "developed by the Official State Agency and" each time they occur.
■ b. In paragraph (a)(3), by adding a period at the end of the paragraph.
■ c. In paragraph (c), by removing the word "States" and adding the words "Cooperating State Agencies" in its place.

■ 4. Section 56.3 is amended by revising paragraph (b)(7) to read as follows:

**§ 56.3 Payment of indemnity.**

* * * * *

(b) * * *

(7) The poultry are located in a State that does not participate in the diagnostic surveillance program for H5/H7 LPAI, as described in § 146.14 of this chapter, or that does not have an initial State response and containment plan for H5/H7 LPAI that is approved by APHIS under § 56.10, unless such poultry participate in the Plan with another State that does participate in the diagnostic surveillance program for H5/H7 LPAI, as described in § 146.14 of this chapter, and has an initial State response and containment plan for H5/H7 LPAI that is approved by APHIS under § 56.10.

* * * * *

■ 5. Section 56.4 is amended as follows:
■ a. In paragraph (a)(2), in the second and third sentences, by removing the word "compensation" and adding the word "indemnity" in its place.
■ b. In paragraph (c)(2), by adding two new sentences after the third sentence to read as set forth below.
■ c. By adding the OMB citation "(Approved by the Office of Management and Budget under control number 0579-0007)" at the end of the section.

**§ 56.4 Determination of indemnity amounts.**

* * * * *

(c) * * *

(2) * * *Appraisals of materials must be reported on forms furnished by APHIS and signed by the appraisers and must be signed by the owners of the materials to indicate agreement with the appraisal amount. Appraisals of materials must be signed prior to the destruction of the materials, unless the owners, APHIS, and the Cooperating State Agency agree that the materials may be destroyed immediately. * * *

■ 6. Section 56.5 is amended as follows:
■ a. In paragraph (a)(7), by removing the word "and" at the end of the paragraph.
■ b. In paragraph (a)(8), by removing the period and adding the word "; and" in its place.
■ c. By adding a new paragraph (a)(9) to read as set forth below.
■ d. By revising paragraph (c)(2) to read as set forth below.
■ e. In the introductory text of paragraph (d), by adding a new sentence before the last sentence to read as set forth below.
■ f. By revising paragraphs (d)(1)(iii), (d)(2)(ii), and (d)(2)(iii) to read as set forth below.
■ g. In paragraph (d)(2)(i), by removing the word "washed" each time it occurs and adding the word "cleaned" in its place.

**§ 56.5 Destruction and disposal of poultry and cleaning and disinfection of premises, conveyances, and materials.**

(a) * * *

(9) Consistency of the method with humane euthanasia guidelines.

* * * * *

(c) * * *

(2) Poultry moved for controlled marketing will not be eligible for indemnity under § 56.3. However, any costs related to cleaning and disinfection of premises, conveyances, and materials that came into contact with poultry that are moved for controlled marketing will be eligible for indemnity under § 56.3.

(d) * * *Cleaning and disinfection must also be performed in accordance with any applicable State and local environmental regulations. * * *

(1) * * *

(iii) Close the house in which the poultry were held, maintaining just enough ventilation to remove moisture. Heat the house to 100 °F and begin in-house composting. Leave the house undisturbed for a minimum of 21 days and for as long as possible thereafter, in order to allow as much H5/H7 LPAI virus as possible to die a natural death.

* * * * *

(2) * * *

(ii) *Cleaning of premises and materials.* Cleaning and washing should be thorough to ensure that all materials or substances contaminated with H5/H7 LPAI virus, especially manure, dried blood, and other organic materials, are removed from all surfaces. Spray all contaminated surfaces above the floor with detergent and water to knock dust down to the floor, using no more water than necessary. Wash equipment and houses with detergent and water. Disassemble equipment as required to clean all contaminated surfaces. Special attention should be given to automatic feeders and other closed areas to ensure adequate cleaning. Inspect houses and equipment to ensure that cleaning has removed all contaminated materials or substances. Rinse with fresh water and let houses and equipment dry completely before applying disinfectant.

(iii) *Disinfection of premises and materials.* When cleaning has been completed and all surfaces are dry, all interior surfaces of the structure should be saturated with a disinfectant registered with the U.S. Environmental Protection Agency (EPA) for AI virus per label instructions or a disinfectant approved by the EPA for use under a Federal Insecticide, Rodenticide, and Fungicide Act section 18 exemption. A power spray unit should be used to spray the disinfectant on all surfaces that may be treated with the disinfectant according to its EPA label, making sure that the disinfectant gets into cracks and crevices. Special attention should be given to automatic feeders and other closed areas to ensure adequate disinfection.

* * * * *

**§ 56.6 [Amended]**

■ 7. Section 56.6 is amended by adding the OMB citation "(Approved by the Office of Management and Budget under control number 0579-0007)" at the end of the section.

**§ 56.7 [Amended]**

■ 8. Section 56.7 is amended by adding the OMB citation "(Approved by the Office of Management and Budget under control number 0579-0007)" at the end of the section.

■ 9. Section 56.8 is amended as follows:
■ a. In paragraph (a)(2), by removing the word "birds" and adding the words "poultry or eggs" in its place.
■ b. By redesignating paragraphs (c) and (d) as paragraphs (d) and (e), respectively, and adding a new paragraph (c) to read as set forth below.

**§ 56.8 Conditions for payment.**

* * * * *

(c) If a contractor receiving indemnity under this section has received any payment under his or her contract from the owner of the poultry or eggs at the time the poultry or eggs are destroyed, the amount of indemnity for which the contract grower is eligible will be reduced by the amount of the payment the contract grower has already received.

* * * * *

**§ 56.9 [Amended]**

■ 10. Section 56.9 is amended by adding the OMB citation "(Approved by the Office of Management and Budget under control number 0579-0007)" at the end of the section.

■ 11. In § 56.10, the introductory text of paragraph (a) is revised to read as follows:

**§ 56.10 Initial State response and containment plan.**

(a) In order for poultry owners within a State to be eligible for indemnity for 100 percent of eligible costs under § 56.3(b), the State in which the poultry participate in the Plan must have in place an initial State response and containment plan that has been approved by APHIS. The initial State response and containment plan must be developed by the Official State Agency. In States where the Official State Agency is different than the Cooperating State Agency, the Cooperating State Agency must also participate in the development of the plan. The plan must be administered by the Cooperating State Agency of the relevant State. This plan must include:

* * * * *

## PART 146—NATIONAL POULTRY IMPROVEMENT PLAN FOR COMMERCIAL POULTRY

■ 12. The authority citation for part 146 continues to read as follows:

**Authority:** 7 U.S.C. 8301-8317; 7 CFR 2.22, 2.80, and 371.4.

■ 13. In § 146.1, a new definition of *Cooperating State Agency* is added and the definition of *H5/H7 LPAI virus infection (infected)* is revised to read as follows:

**§ 146.1 Definitions.**

* * * * *

*Cooperating State Agency.* Any State authority recognized by the Department to cooperate in the administration of the provisions of part 56 of this chapter. This may include the State animal health authority or the Official State Agency.

* * * * *

*H5/H7 LPAI virus infection (infected).* (1) Poultry will be considered to be infected with H5/H7 LPAI for the purposes of this part if:

(i) H5/H7 LPAI virus has been isolated and identified as such from poultry; or

(ii) Viral antigen or viral RNA specific to the H5 or H7 subtype of AI virus has been detected in poultry; or

(iii) Antibodies to the H5 or H7 subtype of the AI virus that are not a consequence of vaccination have been detected in poultry. If vaccine is used, methods should be used to distinguish vaccinated birds from birds that are both vaccinated and infected. In the case of isolated serological positive results, H5/H7 LPAI infection may be ruled out on the basis of a thorough epidemiological investigation that does not demonstrate further evidence of H5/H7 LPAI infection, as determined by APHIS.

(2) The official determination that H5/H7 LPAI virus has been isolated and identified, viral antigen or viral RNA specific to the H5 or H7 subtype of AI virus has been detected, or antibodies to the H5 or H7 subtype of AI virus have been detected may only be made by the National Veterinary Services Laboratories.

* * * * *

**§ 146.2 [Amended]**

■ 14. In § 146.2, paragraph (f) is amended by removing the word "States" and adding the words "Cooperating State Agencies" in its place.

**§ 146.4 [Amended]**

■ 15. Section 146.4 is amended by adding the OMB citation "(Approved by the Office of Management and Budget under control number 0579-0007)" at the end of the section.

**§ 146.11 [Amended]**

■ 16. Section 146.11 is amended by adding the OMB citation "(Approved by the Office of Management and Budget under control number 0579-0007)" at the end of the section.

**§ 146.13 [Amended]**

■ 17. Section 146.13 is amended by adding the OMB citation "(Approved by the Office of Management and Budget under control number 0579-0007)" at the end of the section.

**§ 146.14 [Amended]**

■ 18. Section 146.14 is amended by adding the OMB citation "(Approved by the Office of Management and Budget under control number 0579-0007)" at the end of the section.

**§ 146.24 [Amended]**

■ 19. Section 146.24 is amended by adding the OMB citation "(Approved by the Office of Management and Budget under control number 0579-0007)" at the end of the section.

**§ 146.44 [Amended]**

■ 20. Section 146.44 is amended by adding the OMB citation "(Approved by the Office of Management and Budget under control number 0579-0007)" at the end of the section.

Done in Washington, DC, this 1st day of March 2010.

**John Ferrell,**

*Deputy Under Secretary for Marketing and Regulatory Programs.*

[FR Doc. 2010–4874 Filed 3–8–10; 8:45 am]

BILLING CODE 3410–34–S

## DEPARTMENT OF TRANSPORTATION

### Federal Aviation Administration

### 14 CFR Part 39

**[Docket No. FAA–2009–0452; Directorate Identifier 2007–NM–326–AD; Amendment 39–16223; AD 2010–05–13]**

**RIN 2120–AA64**

## Airworthiness Directives; The Boeing Company Model 737–100, –200, –200C, –300, –400, and –500 Series Airplanes

**AGENCY:** Federal Aviation Administration (FAA), Department of Transportation (DOT).

**ACTION:** Final rule.

**SUMMARY:** The FAA is superseding an existing airworthiness directive (AD) that applies to all Model 737–100, –200, –200C, –300, –400, and –500 series airplanes. That AD currently requires a one-time inspection for scribe lines and cracks in the fuselage skin at certain lap joints, butt joints, external repair doublers, and other areas; and related investigative/corrective actions if necessary. This new AD expands the area to be inspected and, for certain airplanes, requires earlier inspections for certain inspection zones. This AD results from additional detailed analysis of fuselage skin cracks adjacent to the skin lap joints on airplanes that had scribe lines. The analysis resulted in different inspection zones, thresholds and repetitive intervals, and airplane groupings. We are issuing this AD to prevent rapid decompression of the airplane due to fatigue cracks resulting from scribe lines on pressurized fuselage structure.

**DATES:** This AD becomes effective April 13, 2010.

The Director of the Federal Register approved the incorporation by reference of a certain publication listed in the AD as of April 13, 2010.

**ADDRESSES:** For service information identified in this AD, contact Boeing Commercial Airplanes, Attention: Data & Services Management, P.O. Box 3707, MC 2H–65, Seattle, Washington 98124–2207; telephone 206–544–5000, extension 1; fax 206–766–5680; e-mail *me.boecom@boeing.com;* Internet *https://www.myboeingfleet.com.*

**Examining the AD Docket**

You may examine the AD docket on the Internet at *http://www.regulations.gov;* or in person at the Docket Management Facility between 9 a.m. and 5 p.m., Monday through Friday, except Federal holidays. The AD docket contains this AD, the regulatory evaluation, any comments received, and other information. The address for the Docket Office (telephone 800–647–5527) is the Document Management Facility, U.S. Department of Transportation, Docket Operations, M–30, West Building Ground Floor, Room W12–140, 1200 New Jersey Avenue, SE., Washington, DC 20590.

**FOR FURTHER INFORMATION CONTACT:**

Wayne Lockett, Aerospace Engineer, Airframe Branch, ANM–120S, FAA, Seattle Aircraft Certification Office (ACO), 1601 Lind Avenue, SW., Renton, Washington 98057–3356; telephone (425) 917–6447; fax (425) 917–6590.

**SUPPLEMENTARY INFORMATION:**

**Discussion**

The FAA issued a notice of proposed rulemaking (NPRM) to amend 14 CFR part 39 to include an AD that supersedes AD 2006–07–12, Amendment 39–14539 (71 FR 16211, March 31, 2006). The existing AD applies to all Model 737–100, –200, –200C, –300, –400, and –500 series airplanes. That NPRM was published in the **Federal Register** on May 20, 2009 (74 FR 23664). That NPRM proposed to expand the area to be inspected and, for certain airplanes, require earlier inspections for certain inspection zones.

**Comments**

We provided the public the opportunity to participate in the development of this AD. We have considered the comments that have been received on the NPRM.

**Support for the NPRM**

Air Transport Association (ATA), on behalf of its members Alaska Airlines and United Airlines (United), agrees with the assessment and states that those two members will comply with the requirements of the NPRM.

**Request To Change Reference in Paragraph (g)(2) of the NPRM**

Boeing requests that we change paragraph (g)(2) of the NPRM to refer to paragraph (i) of the NPRM instead of paragraph (h) of the NPRM. Boeing notes that this section is in the Restatement of Requirements of AD 2006–07–12, and making this change matches the original AD requirements.

We agree to change the reference from paragraph (h) to paragraph (i) of this AD for the reasons stated previously.

**Request To Clarify Area of Inspection in Paragraph (r) of the NPRM**

Boeing requests that we remove the parenthetical phrase "(adjacent to lap joints on skin panels that do not have bonded doublers)" from paragraph (r) of the NPRM. Boeing states that this statement is not true in all cases. Boeing notes that in some cases the skins under the lap joints in Zones 4 and 5 are bonded, but they are closed pockets that are not chem-milled all the way through the thickness.

We agree to remove the parenthetical phrase from paragraph (r) of this AD for the reasons stated previously.

**Request To Clarify Instructions for Inspections Under the Edge of Hinges on the Main Cargo Door**

Boeing requests that we clarify the instructions for inspections under the edge of hinges on the main cargo door. Boeing notes that Boeing Alert Service Bulletin 737–53A1262, Revision 3, dated October 16, 2008, does not give specific instructions for inspections of scribe lines found under the edge of the hinge on the main cargo door. Boeing requests that we add a statement to provide instructions for inspections in this area. Boeing states that the lap joint inspection method specified in Boeing Alert Service Bulletin 737–53A1262, Revision 3, dated October 16, 2008, applies to the hinge detail.

We agree that additional clarification is necessary. We have added paragraph (s)(4)(iv) to the AD to provide additional instructions for inspections along the lower edge of the main cargo door for the reasons that the commenter provided. We also determined that this change does not increase the economic burden on any operator or increase the scope of the AD.

**Request To Revise Paragraph (t) of the NPRM**

Lufthansa requests that we revise paragraph (t) of the NPRM. Lufthansa requests that we clarify whether Zones 4 and 5 are derived from the former Zones 1, 2, and 3 as identified in the initial release of Boeing Alert Service Bulletin 737–53A1262, dated December 9, 2004. Lufthansa requests that we accept inspections performed in Zones 1, 2, and 3 in accordance with Boeing Alert Service Bulletin 737–53A1262, dated December 9, 2004, as acceptable for compliance with the requirements of paragraphs (q) and (r) of the NPRM.

We agree. The new zones were created by moving specific areas from the existing Zones 1, 2, and 3, and have been inspected as required by AD 2006–07–12. We have revised paragraph (t) of this AD to give credit for inspections accomplished before the effective date of this AD as acceptable for compliance for the requirements of paragraphs (q) and (r) of this AD.

**Request To Provide an Additional Grace Period**

Lufthansa requests that we provide an additional grace period. Lufthansa notes that areas that were shifted to a more critical zone must be inspected within 4,500 flight cycles after the effective date of the AD or before reaching the applicable zonal inspection threshold, whichever occurs later. For any of the new critical zones that are inspected in accordance with the requirements of the full Limited Return to Service (LRTS) program because of previous scribe line findings in the adjacent zone on the same lap splice between two butt joints, Lufthansa requests that we extend the grace period to reach the next heavy maintenance event to do the inspection. Lufthansa states that this may be valid only for airplanes and areas where the requirements of the full LRTS are applied.

We disagree with the request to extend the grace period. The 4,500-flight-cycle grace period applies only to the initial scribe line inspections and does not apply to airplanes with scribe lines that are currently being monitored in the LRTS program. Operators may request an alternative method of compliance (AMOC) in accordance with the requirements of paragraph (y) of this AD. We have not changed the AD in regard to this issue.

**Request To Clarify Procedures for Scribe Lines Outside Structural Repair Manual (SRM) Limits**

Lufthansa requests that we clarify procedures for areas with scribe lines that have become "no zone" (*i.e.,* areas on the fuselage where scribe line inspections are not required) and are inspected in accordance with the LRTS program described in Boeing Alert Service Bulletin 737–53A1262, Revision 3, dated October 16, 2008. Lufthansa notes that the scribe damage in the "no zone" may be out of the SRM limits and may need to be repaired before further flight because the LRTS is no longer applicable.

We disagree that additional procedures are necessary. Note 5 in paragraph 3.A. in the Accomplishment Instructions of Boeing Alert Service Bulletin 737–53A1262, Revision 3, dated October 16, 2008, provides instructions on how to proceed with

scribe lines in any area that is not shown in Zone 1, 2, 3, 4, or 5. We have not changed the AD in regard to this issue.

**Request To Verify Inspection Threshold**

ATA, on behalf of its member United, requests that we verify the inspection threshold. United notes that the inspection threshold specified in FAA Approval Letter 120S–06–141 is the accumulation of 40,000 to 50,000 flight cycles. United states that neither the AMOC nor Boeing Alert Service Bulletin 737–53A1262, Revision 3, dated October 16, 2008, requires this terminating inspection to be accomplished after the accumulation of 40,000 flight cycles. United requests that we verify that this inspection cannot be performed before the accumulation of 40,000 flight cycles.

We agree that clarification may be necessary, and we agree to verify the threshold. This inspection cannot be performed for credit before the accumulation of 40,000 total flight cycles. After reviewing the scribe line damage adjacent to the lap joints, we determined that the terminating inspection performed in accordance with Boeing Service Bulletin 737–53–1179, Revision 2, dated October 25, 2006, mandated by AD 2003–14–06, Amendment 39–13225 (68 FR 42956, July 21, 2003), should be accomplished again in accordance with AD 2003–14–06 in the areas of known scribe lines after the accumulation of 40,000 total flight cycles. This inspection is designed to ensure that the underlying substructure is intact and would have no effect on the LRTS program. We have not changed the AD regarding this issue.

**Request To Clarify Whether Inspection is Required**

ATA, on behalf of its member United, asks that we clarify whether the inspection required by paragraph (g) of the NPRM is required if operators have accomplished the terminating action in accordance with AMOC 120S–06–209 for AD 2003–14–06.

We agree that clarification is necessary. We have approved the inspection methods specified in FAA Approval Letter 120S–06–209, dated April 13, 2006, as an AMOC to the terminating action requirements of paragraph (b) of AD 2003–14–06. Paragraph 12.a.(2), of Part 12 of the Accomplishment Instructions of Boeing Service Bulletin 737–53A1262, Revision 1, dated March 1, 2007; Revision 2, dated September 20, 2007; and Revision 3, dated October 16, 2008; specify internal inspections in accordance with Boeing Service Bulletin 737–53–1179, Revision 2, dated October 25, 2001, except for airplanes inspected internally in accordance with paragraph (b) of AD 2003–14–06. Inspections accomplished in accordance with FAA Approval Letter 120S–06–209, dated April 13, 2006, are approved as an acceptable alternative method of compliance to the internal inspections specified in Paragraph 12.a.(2) of Part 12 of the Accomplishment Instructions of Boeing Service Bulletin 737–53A1262, Revision 1, dated March 1, 2007; Revision 2, dated September 20, 2007; and Revision 3, dated October 16, 2008; and required by paragraph (b) of AD 2003–14–06. We have added a reference to previously approved AMOCs in paragraph (x) of this AD.

**Request To Clarify Butt-to-Butt Inspection Requirements**

ATA, on behalf of its member United, requests that we clarify that the butt-to-butt inspection is only for areas where a scribe line is found within 0.063 inches of the upper skin areas in a zone.

We agree that clarification may be necessary. Figure 128 of Boeing Alert Service Bulletin 737–53A1262, Revision 3, dated October 16, 2008, indicates that butt-to-butt inspections are required for all scribe lines within 0.10 inch of the lap joint upper skin. We have not changed the AD regarding this issue.

**Request To Issue Similar Rulemaking**

The National Transportation Safety Board (NTSB) notes that while the NPRM addresses scribe-type damage on Model 737 airplanes, it is concerned that this type of damage is not limited to Model 737 airplanes. The NTSB urges that we conduct similar analyses and issue similar rulemaking for other makes and models of airplanes.

We acknowledge the NTSB's concerns. This issue is a long-term durability issue that is not limited to any particular airplane model. We are currently working to address scribe line issues on other airplanes. The effect on each airplane model varies with each model's design characteristics and the conditions under which they have been operated. We have been in contact with other governing regulatory agencies and manufacturers, and we may consider further rulemaking as a result of these efforts. We have not changed the AD in regard to this issue.

**Explanation of Change Made to This AD**

Boeing Commercial Airplanes has received an Organization Designation Authorization (ODA), which replaces their previous designation as a Delegation Option Authorization (DOA) holder. We have revised paragraph (y)(3) of this AD to delegate the authority to approve an alternative method of compliance for any repair required by this AD to the Boeing Commercial Airplanes ODA.

**Conclusion**

We have carefully reviewed the available data, including the comments that have been received, and determined that air safety and the public interest require adopting the AD with the changes described previously. We have determined that these changes will neither increase the economic burden on any operator nor increase the scope of the AD.

**Explanation of Change to Costs of Compliance**

Since issuance of the NPRM, we have increased the labor rate used in the Costs of Compliance from $80 per work-hour to $85 per work-hour. The Costs of Compliance information, below, reflects this increase in the specified hourly labor rate.

**Costs of Compliance**

There are about 2,685 airplanes of the affected design in the worldwide fleet. The following table provides the estimated costs, including the costs for the new inspection areas in Zones 4 and 5, for U.S. operators to comply with this AD.

ESTIMATED COSTS REQUIRED BY AD 2006–07–12

| Zone | Action | Work hours | Average labor rate per hour | Cost per airplane | Number of U.S.-registered airplanes | Fleet cost |
|---|---|---|---|---|---|---|
| 1 | Sealant removal | 66 | $85 | $5,610 | 787 | $4,415,070 |
| | Inspection | 4 | 85 | 340 | 87 | 267,580 |
| 2 | Sealant removal | 38 | 85 | 3,230 | 787 | 2,542,010 |
| | Inspection | 29 | 85 | 2,465 | 787 | 1,939,955 |

ESTIMATED COSTS REQUIRED BY AD 2006–07–12—Continued

| Zone | Action | Work hours | Average labor rate per hour | Cost per airplane | Number of U.S.-registered airplanes | Fleet cost |
|---|---|---|---|---|---|---|
| 3 | Sealant removal | 88 | 85 | 7,480 | 787 | 5,886,760 |
| | Inspection | 38 | 85 | 3,230 | 787 | 2,542,010 |

ESTIMATED COSTS REQUIRED BY NEW ACTIONS OF THIS AD

| Zone | Action | Work hours | Average labor rate per hour | Cost per airplane | Number of U.S.-registered airplanes | Fleet cost |
|---|---|---|---|---|---|---|
| 4 | Sealant removal | 15 | $85 | $1,275 | 787 | $ 1,003,425 |
| | Inspection | 1 | 85 | 85 | 787 | 66,895 |
| 5 | Sealant removal | 31 | 85 | 2,635 | 787 | 2,073,745 |
| | Inspection | 2 | 85 | 170 | 787 | 133,790 |

## Authority for This Rulemaking

Title 49 of the United States Code specifies the FAA's authority to issue rules on aviation safety. Subtitle I, Section 106, describes the authority of the FAA Administrator. Subtitle VII, Aviation Programs, describes in more detail the scope of the Agency's authority.

We are issuing this rulemaking under the authority described in Subtitle VII, Part A, Subpart III, Section 44701, "General requirements." Under that section, Congress charges the FAA with promoting safe flight of civil aircraft in air commerce by prescribing regulations for practices, methods, and procedures the Administrator finds necessary for safety in air commerce. This regulation is within the scope of that authority because it addresses an unsafe condition that is likely to exist or develop on products identified in this rulemaking action.

## Regulatory Findings

We have determined that this AD will not have federalism implications under Executive Order 13132. This AD will not have a substantial direct effect on the States, on the relationship between the national government and the States, or on the distribution of power and responsibilities among the various levels of government.

For the reasons discussed above, I certify that this AD:

(1) Is not a "significant regulatory action" under Executive Order 12866;

(2) Is not a "significant rule" under DOT Regulatory Policies and Procedures (44 FR 11034, February 26, 1979); and

(3) Will not have a significant economic impact, positive or negative, on a substantial number of small entities under the criteria of the Regulatory Flexibility Act.

We prepared a regulatory evaluation of the estimated costs to comply with this AD and placed it in the AD docket. See the **ADDRESSES** section for a location to examine the regulatory evaluation.

## List of Subjects in 14 CFR Part 39

Air transportation, Aircraft, Aviation safety, Incorporation by reference, Safety.

## Adoption of the Amendment

Accordingly, under the authority delegated to me by the Administrator, the FAA amends 14 CFR part 39 as follows:

## PART 39—AIRWORTHINESS DIRECTIVES

■ 1. The authority citation for part 39 continues to read as follows:

**Authority:** 49 U.S.C. 106(g), 40113, 44701.

### § 39.13 [Amended]

■ 2. The Federal Aviation Administration (FAA) amends § 39.13 by removing amendment 39–14539 (71 FR 16211, March 31, 2006) and by adding the following new airworthiness directive (AD):

**2010–05–13 The Boeing Company**: Amendment 39–16223. Docket No. FAA–2009–0452; Directorate Identifier 2007–NM–326–AD.

**Effective Date**

(a) This AD becomes effective April 13, 2010.

**Affected ADs**

(b) This AD supersedes AD 2006–07–12, Amendment 39–14539.

**Applicability**

(c) This AD applies to all The Boeing Company Model 737–100, –200, –200C, –300, –400, and –500 series airplanes, certificated in any category.

**Subject**

(d) Air Transport Association (ATA) of America Code 53: Fuselage.

**Unsafe Condition**

(e) This AD results from reports of fuselage skin cracks adjacent to the skin lap joints on airplanes that had scribe lines. Scribe line damage can also occur at many other locations, including butt joints, external doublers, door scuff plates, the wing-to-body fairing, and areas of the fuselage where decals have been applied or removed. We are issuing this AD to prevent rapid decompression of the airplane due to fatigue cracks resulting from scribe lines on pressurized fuselage structure.

**Compliance**

(f) You are responsible for having the actions required by this AD performed within the compliance times specified, unless the actions have already been done.

**Restatement of Requirements of AD 2006–07–12**

*Inspection*

(g) Do a detailed inspection for scribe lines and cracks in the fuselage skin at certain lap joints, butt joints, external repair doublers, and other areas, in accordance with the Accomplishment Instructions of Boeing Alert Service Bulletin 737–53A1262, dated December 9, 2004, except as provided by paragraphs (h), (k), (l), (m), (n), and (o) of this AD. Except as required by paragraph (q) of this AD, do the actions at the time specified in paragraph 1.E., "Compliance," of Boeing Alert Service Bulletin 737–53A1262, dated December 9, 2004, except as required by paragraph (j) of this AD. Acceptable inspection exemptions are described in paragraph 1.E.1. of Boeing Alert Service Bulletin 737–53A1262, dated December 9, 2004.

(1) If no scribe line is found, no further work is required by this paragraph.

(2) If any scribe line is found: Do all applicable investigative and corrective actions at the time specified in paragraph 1.E. of Boeing Alert Service Bulletin 737–53A1262, dated December 9, 2004, by doing all applicable actions specified in Boeing

Alert Service Bulletin 737–53A1262, dated December 9, 2004, except as required by paragraph (i) of this AD.

**Note 1:** A detailed inspection is defined in Note 10 of Boeing Alert Service Bulletin 737–53A1262, dated December 9, 2004, under paragraph 3.A., "General Information." Specific magnification requirements may be specified in the steps of the Work Instructions.

*Exceptions to and Clarification of Service Bulletin 737–53A1262 Procedures*

(h) Paragraph (g) of this AD requires accomplishment of Parts 1 through 11 of Boeing Alert Service Bulletin 737–53A1262, dated December 9, 2004. Parts 12 and 13 of Boeing Alert Service Bulletin 737–53A1262, dated December 9, 2004, may be accomplished, if applicable, to allow temporary return to service. This AD does not require accomplishment of Part 14 of Boeing Alert Service Bulletin 737–53A1262, dated December 9, 2004, although the FAA-approved procedures described in Part 14 are acceptable for continued operation with scribe lines found before the applicable compliance time.

(i) If any scribe line or crack is found during any inspection required by paragraph (g) of this AD, and Boeing Alert Service Bulletin 737–53A1262, dated December 9, 2004, specifies to contact Boeing for appropriate action: Before further flight, inspect or repair scribe lines and repair cracks using a method approved in accordance with the procedures specified in paragraph (y) of this AD.

(j) Where Boeing Alert Service Bulletin 737–53A1262, dated December 9, 2004, specifies a compliance time after the issuance of that service bulletin, this AD requires compliance within the specified compliance time after May 5, 2006 (the effective date of AD 2006–07–12).

(k) Certain figures are incorrectly identified in Boeing Alert Service Bulletin 737–53A1262, dated December 9, 2004. The figure cited in Part 8, step 3, should be Figure 39, not Figure 38. The figure cited in Part 9, step 4, should be Figure 38, not Figure 39.

(l) If the operator's records show that the airplane has never been stripped and repainted under the dorsal fin fairing since delivery from The Boeing Company, then this AD does not require inspections of the butt joint, lap joint, and repair, as specified in paragraph (g) of this AD, in the areas under the dorsal fin fairing.

(m) Figure 37 of Boeing Alert Service Bulletin 737–53A1262, dated December 9, 2004, defines "Restricted Zones" at door cutouts as the only affected structure. Paragraph (g) of this AD considers this area to also include Zone 1B.

(n) In Figure 1, sheets 2 and 3, of Boeing Alert Service Bulletin 737–53A1262, dated December 9, 2004, the first condition for the initial compliance threshold for Areas B, C, and E is for areas where the cutout modification shown in Boeing Service Bulletin 737–53A1177 was accomplished. Paragraph (g) of this AD considers this condition to also include Zone 1B.

(o) In Figure 1, sheets 2 and 3, of Boeing Alert Service Bulletin 737–53A1262, dated December 9, 2004, the second condition for the initial compliance threshold for Areas B, C, and E is for areas where the cutout modification shown in Boeing Service Bulletin 737–53A1177 was not accomplished. Paragraph (g) of this AD considers this condition to apply only to Zone 1A.

*Reporting Requirement*

(p) For airplanes on which inspections have been done in accordance with Boeing Alert Service Bulletin 737–53A1262, dated December 9, 2004: At the applicable time specified in paragraph (p)(1) or (p)(2) of this AD, submit a report of positive findings of cracks found during the inspection required by paragraph (g) of this AD to the Boeing Commercial Airplane Group, P.O. Box 3707, Seattle, Washington 98124–2207. Alternatively, operators may submit reports to their Boeing Company field service representatives. The report shall contain, as a minimum, the following information: Airplane serial number, flight cycles at time of discovery, location(s) and extent of positive crack findings. Under the provisions of the Paperwork Reduction Act of 1980 (44 U.S.C. 3501 *et seq.*), the Office of Management and Budget (OMB) has approved the information collection requirements contained in this AD and has assigned OMB Control Number 2120–0056.

(1) If the inspection was done before May 5, 2006: Send the report within 30 days after May 5, 2006.

(2) If the inspection was done after May 5, 2006: Send the report within 30 days after the inspection is done.

**New Requirements of This AD**

*Inspection*

(q) As of the effective date of this AD, the actions for Zones 1, 2, and 3, as specified in paragraph (g) of this AD, must be done in accordance with the Accomplishment Instructions of Boeing Alert Service Bulletin 737–53A1262, Revision 3, dated October 16, 2008, and at the applicable times specified in paragraph 1.E., "Compliance," of Boeing Alert Service Bulletin 737–53A1262, Revision 3, dated October 16, 2008, except as specified in paragraph (s) of this AD.

**Note 2:** Paragraph 1.E.5. of Boeing Alert Service Bulletin 737–53A1262, Revision 3, dated October 16, 2008, provides a grace period for airplanes that have exceeded the revised thresholds.

*Inspection of Zones 4 and 5*

(r) Do a detailed inspection for scribe lines and cracks in Zones 4 and 5, as specified in Boeing Alert Service Bulletin 737–53A1262, Revision 3, dated October 16, 2008. Except as provided by paragraph (s) of this AD, do the actions in accordance with the Accomplishment Instructions of Boeing Alert Service Bulletin 737–53A1262, Revision 3, dated October 16, 2008, and at the applicable time specified in paragraph 1.E., "Compliance," of Boeing Alert Service Bulletin 737–53A1262, Revision 3, dated October 16, 2008, or within 4,500 flight cycles after the effective date of this AD, whichever occurs later.

(1) If no scribe line or crack is found: No further work is required by this paragraph.

(2) If any scribe line or crack is found: Do all applicable investigative and corrective actions at the time specified in paragraph 1.E. of Boeing Alert Service Bulletin 737–53A1262, Revision 3, dated October 16, 2008, by doing all applicable actions specified in the Accomplishment Instructions of Boeing Alert Service Bulletin 737–53A1262, Revision 3, dated October 16, 2008, except as required by paragraph (s)(1) of this AD.

*Exceptions to Specifications of Boeing Alert Service Bulletin 737–53A1262, Revision 3, dated October 16, 2008*

(s) The following exceptions to Boeing Alert Service Bulletin 737–53A1262, Revision 3, dated October 16, 2008, apply to this AD:

(1) If any scribe line or crack is found during any inspection required by this AD, and Boeing Alert Service Bulletin 737–53A1262, Revision 3, dated October 16, 2008, specifies to contact The Boeing Company for appropriate action: Before further flight, inspect or repair scribe lines and repair cracks using a method approved in accordance with the procedures specified in paragraph (y) of this AD.

(2) Where Boeing Alert Service Bulletin 737–53A1262, Revision 3, dated October 16, 2008, specifies a compliance time after the issuance of that service bulletin, this AD requires compliance within the specified compliance time after the effective date of this AD.

(3) If the operator's records show that the airplane has never been stripped and repainted under the dorsal fin fairing since delivery from The Boeing Company, then this AD does not require inspections of the butt joint, lap joint, and repair, as specified in paragraphs (g), (q), and (r) of this AD, in the areas under the dorsal fin fairing.

(4) For airplanes in Groups 3 and 29, as identified in Boeing Alert Service Bulletin 737–53A1262, Revision 3, dated October 16, 2008: At the applicable times specified in paragraphs (s)(4)(i), (s)(4)(ii), and (s)(4)(iii) of this AD, perform a detailed inspection for scribe lines and cracks on the main cargo door along the lower edge of the upper hinge, around external repairs, and around decals, in accordance with the Accomplishment Instructions of Boeing Alert Service Bulletin 737–53A1262, Revision 3, dated October 16, 2008, except as provided by paragraph (s)(4)(iv) of this AD, or using a method approved in accordance with the procedures specified in paragraph (y) of this AD. If no scribe line or crack is found, no further work is required by this paragraph. If any scribe line or crack is found, do all applicable related investigative and corrective actions at the time specified in paragraph 1.E. of Boeing Alert Service Bulletin 737–53A1262, Revision 3, dated October 16, 2008, by doing all applicable actions specified in the Accomplishment Instructions of Boeing Alert Service Bulletin 737–53A1262, Revision 3, dated October 16, 2008, except as required by paragraphs (s)(1), (s)(2), and (s)(3) of this AD.

(i) For areas along the lower edge of the door hinge from body station (BS) 360 to BS 500, the initial compliance threshold is to be determined using Zone 1B.

(ii) For external repairs, the initial compliance threshold is to be determined using Zone 1B.

(iii) For decals, the initial compliance threshold is to be determined using Zone 2.

(iv) When accomplishing scribe line inspections along the lower edge of the main cargo door hinge, consider the hinge-to-skin detail inspection to be equivalent to a lap joint detail inspection and use the lap joint inspection methods in accordance with Boeing Alert Service Bulletin 737–53A1262, Revision 3, dated October 16, 2008.

(5) For Group 11 airplanes, as specified in Boeing Alert Service Bulletin 737–53A1262, Revision 3, dated October 16, 2008: Stringer 20R between BS 727C and BS 727D+10 is in Zone 1B.

*Actions Accomplished in Accordance With Previous Service Information*

(t)(1) Actions accomplished before the effective date of this AD in accordance with Boeing Alert Service Bulletin 737–53A1262, dated December 9, 2004, are acceptable for compliance with the corresponding requirements of paragraphs (q) and (r) of this AD.

(2) Actions accomplished before the effective date of this AD in accordance with Boeing Service Bulletin 737–53A1262, Revision 1, dated March 1, 2007; or Revision 2, dated September 20, 2007; are acceptable for compliance with the corresponding requirements of paragraphs (g), (q), and (r) of this AD.

*Clarification of Procedures in the Service Bulletin*

(u) For airplanes on which inspections are done as of the effective date of this AD: This AD requires accomplishment of Parts 1 through 11, 15, and 16 of the Accomplishment Instructions of Boeing Alert Service Bulletin 737–53A1262, Revision 3, dated October 16, 2008. Parts 12 and 13 of the Accomplishment Instructions of Boeing Alert Service Bulletin 737–53A1262, Revision 3, dated October 16, 2008, may be accomplished, if applicable, to allow temporary return to service. This AD does not require accomplishment of Part 14 of the Accomplishment Instructions of Boeing Alert Service Bulletin 737–53A1262, Revision 3, dated October 16, 2008, although the FAA-approved procedures described in Part 14 are acceptable for continued operation with scribe lines found before the applicable compliance time.

*Report*

(v) For airplanes on which inspections are done in accordance with the service information identified in Table 1 of this AD: At the applicable time specified in paragraph (v)(1) or (v)(2) of this AD, submit a report of positive findings of cracks found during the inspections required by paragraphs (q), (r), and (s)(4) of this AD to the Boeing Commercial Airplane Group, P.O. Box 3707, Seattle, Washington 98124–2207. Alternatively, operators may submit reports to their Boeing Company field service representatives. The report must contain, as a minimum, the following information: airplane serial number, flight cycles at time of discovery, location(s) and extent of positive crack findings. Under the provisions of the Paperwork Reduction Act (44 U.S.C. 3501 *et seq.*), the Office of Management and Budget (OMB) has approved the information collection requirements contained in this AD and has assigned OMB Control Number 2120–0056.

(1) For an inspection done before the effective date of this AD: Send the report within 30 days after the effective date of this AD.

(2) For an inspection done after the effective date of this AD: Send the report within 30 days after the inspection is done.

TABLE 1—SERVICE INFORMATION

| Boeing Service Information | Revision | Date |
|---|---|---|
| Boeing Alert Service Bulletin 737–53A1262 | 3 | October 16, 2008. |
| Boeing Service Bulletin 737–53A1262 | 1 | March 1, 2007. |
| Boeing Service Bulletin 737–53A1262 | 2 | September 20, 2007. |

*Repair Plan in Lieu of Required Inspections*

(w) A repair plan approved by a Boeing Company Authorized Representative or Designated Engineering Representative before the effective date of this AD is acceptable for compliance with the requirements of paragraphs (g)(2), (i), (q), (r), (s)(1), and (s)(4) of this AD, provided the approval was documented via FAA Form 8110–3 or 8100–9, and scribe line damage identified in the title of the form.

*Exceptions and Clarification*

(x) Paragraph 12.a.(2) of Part 12 of the Accomplishment Instructions of Boeing Service Bulletin 737–53A1262, Revision 1, dated March 1, 2007; Revision 2, dated September 20, 2007; and Boeing Alert Service Bulletin 737–53A1262, Revision 3, dated October 16, 2008; specifies internal inspections in accordance with Boeing Service Bulletin 737–53–1179, Revision 2, dated October 25, 2001, except for airplanes inspected internally in accordance with paragraph (b) of AD 2003–14–06, Amendment 39–13225. Inspections accomplished in accordance with AMOCs previously approved to paragraph (b) of AD 2003–14–06, are approved as an acceptable alternative method of compliance to the internal inspections specified in Part 12 of Boeing Alert Service Bulletin 737–53A1262, Revision 1, dated March 1, 2007; Revision 2, dated September 20, 2007; and Revision 3, dated October 16, 2008.

*Alternative Methods of Compliance (AMOCs)*

(y)(1) The Manager, Seattle Aircraft Certification Office (ACO), FAA, has the authority to approve AMOCs for this AD, if requested in accordance with the procedures found in 14 CFR 39.19. Send information to ATTN: Wayne Lockett, Aerospace Engineer, Airframe Branch, ANM–120S, FAA, Seattle ACO, 1601 Lind Avenue, SW., Renton, Washington 98057–3356; telephone (425) 917–6447; fax (425) 917–6590. Or, e-mail information to *9-ANM-Seattle-ACO-AMOC-Requests@faa.gov.*

(2) To request a different method of compliance or a different compliance time for this AD, follow the procedures in 14 CFR 39.19. Before using any approved AMOC on any airplane to which the AMOC applies, notify your principal maintenance inspector (PMI) or principal avionics inspector (PAI), as appropriate, or lacking a principal inspector, your local Flight Standards District Office. The AMOC approval letter must specifically reference this AD.

(3) An AMOC that provides an acceptable level of safety may be used for any repair required by this AD, if it is approved by the Boeing Commercial Airplanes Organization Designation Authorization (ODA) that has been authorized by the Manager, Seattle ACO, to make those findings. For a repair method to be approved, the repair must meet the certification basis of the airplane, and the approval must specifically refer to this AD.

*Material Incorporated by Reference*

(z) You must use Boeing Alert Service Bulletin 737–53A1262, Revision 3, dated October 16, 2008; to do the actions required by this AD, unless the AD specifies otherwise.

(1) The Director of the Federal Register approved the incorporation by reference of Boeing Alert Service Bulletin 737–53A1262, Revision 3, dated October 16, 2008, under 5 U.S.C. 552(a) and 1 CFR part 51.

(2) For service information identified in this AD, contact Boeing Commercial Airplanes, Attention: Data & Services Management, P.O. Box 3707, MC 2H–65, Seattle, Washington 98124–2207; telephone 206–544–5000, extension 1; fax 206–766–5680; e-mail *me.boecom@boeing.com;* Internet *https://www.myboeingfleet.com.*

(3) You may review copies of the service information at the FAA, Transport Airplane Directorate, 1601 Lind Avenue, SW., Renton, Washington. For information on the availability of this material at the FAA, call 425–227–1221 or 425–227–1152.

(4) You may also review copies of the service information that is incorporated by reference at the National Archives and Records Administration (NARA). For information on the availability of this

material at NARA, call 202–741–6030, or go to: *http://www.archives.gov/federal_register/code_of_federal_regulations/ibr_locations.html.*

Issued in Renton, Washington, on February 24, 2010.

**Jeffrey E. Duven,**

*Acting Manager, Transport Airplane Directorate, Aircraft Certification Service.*

[FR Doc. 2010–4511 Filed 3–8–10; 8:45 am]

**BILLING CODE 4910–13–P**

---

## DEPARTMENT OF TRANSPORTATION

## Federal Aviation Administration

## 14 CFR Part 39

**[Docket No. FAA–2009–0609; Directorate Identifier 2009–NM–037–AD; Amendment 39–16222; AD 2010–05–12]**

**RIN 2120–AA64**

## Airworthiness Directives; Bombardier Model DHC–8–102, DHC–8–103, DHC–8–106, DHC–8–201, and DHC–8–202 Series Airplanes

**AGENCY:** Federal Aviation Administration (FAA), Department of Transportation (DOT).

**ACTION:** Final rule.

**SUMMARY:** We are adopting a new airworthiness directive (AD) for the products listed above. This AD results from mandatory continuing airworthiness information (MCAI) originated by an aviation authority of another country to identify and correct an unsafe condition on an aviation product. The MCAI describes the unsafe condition as:

> During a puncture voltage test of the aluminum-loaded paint on an in-service DHC–8 aircraft, conducted to validate an SFAR 88 [Special Federal Aviation Regulation No. 88] related task, Bombardier Aerospace (BA) discovered that the top wing fuel tank skin between Yw171.20 and Yw261.00 was painted with a non-aluminized enamel coating * * *.
>
> With this type of paint application, it is possible that, in the worst case scenario, a lightning strike could puncture the wing skin and create an ignition source in the fuel tank.

Ignition sources inside fuel tanks, in combination with flammable fuel vapors, could result in fuel tank explosions and consequent loss of the airplane. We are issuing this AD to require actions to correct the unsafe condition on these products.

**DATES:** This AD becomes effective April 13, 2010.

The Director of the Federal Register approved the incorporation by reference of a certain publication listed in this AD as of April 13, 2010.

**ADDRESSES:** You may examine the AD docket on the Internet at *http://www.regulations.gov* or in person at the U.S. Department of Transportation, Docket Operations, M–30, West Building Ground Floor, Room W12–140, 1200 New Jersey Avenue, SE., Washington, DC.

**FOR FURTHER INFORMATION CONTACT:** Kyle Williams, Aerospace Engineer, Avionics and Flight Test Branch, ANE–172, FAA, New York Aircraft Certification Office, 1600 Stewart Avenue, Suite 410, Westbury, New York 11590; telephone (516) 228–7347; fax (516) 794–5531.

**SUPPLEMENTARY INFORMATION:**

### Discussion

We issued a notice of proposed rulemaking (NPRM) to amend 14 CFR part 39 to include an AD that would apply to the specified products. That NPRM was published in the **Federal Register** on July 6, 2009 (74 FR 31891). That NPRM proposed to correct an unsafe condition for the specified products. The MCAI states:

> During a puncture voltage test of the aluminum-loaded paint on an in-service DHC–8 aircraft, conducted to validate an SFAR 88 [Special Federal Aviation Regulation No. 88] related task, Bombardier Aerospace (BA) discovered that the top wing fuel tank skin between Yw171.20 and Yw261.00 was painted with a non-aluminized enamel coating due to a misinterpretation of the painting instructions in the Structural Repair Manual (SRM).
>
> With this type of paint application, it is possible that, in the worst case scenario, a lightning strike could puncture the wing skin and create an ignition source in the fuel tank.

Ignition sources inside fuel tanks, in combination with flammable fuel vapors, could result in fuel tank explosions and consequent loss of the airplane. Required actions include performing a functional check of the dielectric properties of the fuel tank skin for aluminum-loaded primer and aluminum-loaded enamel coating. For airplanes on which the aluminum-loaded primer and aluminum-loaded enamel coating have been properly applied, the required actions include restoring the protective finish on the areas where the surface finish was removed. For airplanes on which the aluminum-loaded primer and aluminum-loaded enamel coating have not been applied or have not been properly applied, the required actions include stripping the affected wing skin surfaces to bare metal and applying alodine coating to those areas, performing a detailed visual inspection of the stripped areas for any sign of corrosion or deterioration of the protective alodine coating and re-applying the protective alodine coating, and painting the affected wing skin surfaces with aluminum-loaded primer and aluminum-loaded enamel coating. You may obtain further information by examining the MCAI in the AD docket.

### Comments

We gave the public the opportunity to participate in developing this AD. We considered the comment received.

### Request To Extend Compliance Time

Mesa Airlines asks that the compliance time in the NPRM be extended to correspond with certain compliance times specified in related AD 2008–13–09, Amendment 39–15572 (73 FR 47029, August 13, 2008), which requires revising the Airworthiness Limitations Section (ALS) of the Instructions for Continued Airworthiness to incorporate certain fuel system limitations.

Mesa Airlines states that the compliance time for fuel systems limitations (FSL) Task FSL–07 (a functional check of the aluminum loaded primer and enamel on the wing skin) is 18,000 flight hours or 108 months, with a repetitive interval not to exceed 18,000 flight hours. Mesa Airlines notes that AD 2008–13–09 set the initial inspections for that task at 6,000 flight hours or 36 months, with a repetitive interval not to exceed 18,000 flight hours, which corresponds with its heavy maintenance checks. Mesa Airlines adds that the NPRM makes no mention of the related AD or compliance times in that AD, and the compliance time specified in the NPRM is within 18 months after the effective date of the AD.

Mesa Airlines states that the proposed compliance time constraint will require it to do massive rescheduling to move its current inspections forward approximately 254 days, and adds that this will cause an undue burden. Mesa Airlines adds that the NPRM is to be accomplished in accordance with Bombardier Service Bulletin 8–57–46, Revision A, dated February 6, 2009, which states that it contains a procedure that is a fuel tank safety-critical item and is classified as a Critical Design Configuration Control Limitations (CDCCL); that CDCCL is FSL–07, which was added by AD 2008–13–09.

We do not agree that the compliance time should be extended. AD 2008–13–09 was issued to mandate the FSL tasks identified as part of the fuel system safety assessment. Task FSL–07 was identified as necessary to ensure that the aluminum-loaded primer and enamel is protecting the fuel tank skin from burn-through during lightning

strikes. Since no in-service deterioration or non-compliance of the coating was identified at that time, an appropriate compliance time and phase-in schedule was mandated to align the FSL task with major maintenance checks. Further investigation revealed that unclear instructions and misinterpretation of the structural repair manual led to a newly painted airplane having coating that was lacking in aluminum powder and thus failed to meet the requirement of Task FSL–07. In light of this, Transport Canada Civil Aviation (TCCA) determined that the compliance time for correcting this unsafe condition should be reduced and issued Canadian AD CF–2009–05 (referred to in the 'Related Information' section of the NPRM) as a result. In addition, comparison of the calendar-based compliance time in AD 2008–13–09 and the NPRM show that higher-time airplanes will need to perform the functional test of the dielectric properties five-and-a-half months earlier versus the 254 days asserted by Mesa Airlines. Therefore, this AD requires accomplishing Task FSL–07 at an earlier compliance time than the compliance time required by AD 2008–13–09. We have made no change to the AD in this regard.

We have added a new paragraph (f)(6) to this AD to give credit for accomplishing the corresponding actions in AD 2008–13–09, which meets the compliance requirements specified in this AD.

### Explanation of Change Made to This AD

We have revised the "Alternative Methods of Compliance (AMOCs)" paragraph in this AD to clarify the point of contact as the Program Manager, Continuing Operational Safety, New York Aircraft Certification Office.

### Conclusion

We reviewed the relevant data, considered the comment received, and determined that air safety and the public interest require adopting the AD with the change described previously. We also determined that this change will not increase the economic burden on any operator or increase the scope of the AD.

### Differences Between This AD and the MCAI or Service Information

We have reviewed the MCAI and related service information and, in general, agree with their substance. But we might have found it necessary to use different words from those in the MCAI to ensure the AD is clear for U.S. operators and is enforceable. In making these changes, we do not intend to differ substantively from the information provided in the MCAI and related service information.

We might also have required different actions in this AD from those in the MCAI in order to follow our FAA policies. Any such differences are highlighted in a NOTE within the AD.

### Costs of Compliance

We estimate that this AD will affect 22 products of U.S. registry. We also estimate that it will take about 24 work-hours per product to comply with the basic requirements of this AD. The average labor rate is $80 per work-hour. Based on these figures, we estimate the cost of this AD to the U.S. operators to be $42,240, or $1,920 per product.

### Authority for This Rulemaking

Title 49 of the United States Code specifies the FAA's authority to issue rules on aviation safety. Subtitle I, section 106, describes the authority of the FAA Administrator. "Subtitle VII: Aviation Programs," describes in more detail the scope of the Agency's authority.

We are issuing this rulemaking under the authority described in "Subtitle VII, Part A, Subpart III, Section 44701: General requirements." Under that section, Congress charges the FAA with promoting safe flight of civil aircraft in air commerce by prescribing regulations for practices, methods, and procedures the Administrator finds necessary for safety in air commerce. This regulation is within the scope of that authority because it addresses an unsafe condition that is likely to exist or develop on products identified in this rulemaking action.

### Regulatory Findings

We determined that this AD will not have federalism implications under Executive Order 13132. This AD will not have a substantial direct effect on the States, on the relationship between the national government and the States, or on the distribution of power and responsibilities among the various levels of government.

For the reasons discussed above, I certify this AD:

1. Is not a "significant regulatory action" under Executive Order 12866;

2. Is not a "significant rule" under the DOT Regulatory Policies and Procedures (44 FR 11034, February 26, 1979); and

3. Will not have a significant economic impact, positive or negative, on a substantial number of small entities under the criteria of the Regulatory Flexibility Act.

We prepared a regulatory evaluation of the estimated costs to comply with this AD and placed it in the AD docket.

### Examining the AD Docket

You may examine the AD docket on the Internet at *http://www.regulations.gov;* or in person at the Docket Operations office between 9 a.m. and 5 p.m., Monday through Friday, except Federal holidays. The AD docket contains the NPRM, the regulatory evaluation, any comments received, and other information. The street address for the Docket Operations office (telephone (800) 647–5527) is in the **ADDRESSES** section. Comments will be available in the AD docket shortly after receipt.

### List of Subjects in 14 CFR Part 39

Air transportation, Aircraft, Aviation safety, Incorporation by reference, Safety.

### Adoption of the Amendment

Accordingly, under the authority delegated to me by the Administrator, the FAA amends 14 CFR part 39 as follows:

## PART 39—AIRWORTHINESS DIRECTIVES

■ 1. The authority citation for part 39 continues to read as follows:

**Authority:** 49 U.S.C. 106(g), 40113, 44701.

### § 39.13 [Amended]

■ 2. The FAA amends § 39.13 by adding the following new AD:

**2010–05–12 Bombardier, Inc. (Formerly de Havilland, Inc.)**: Amendment 39–16222. Docket No. FAA–2009–0609; Directorate Identifier 2009–NM–037–AD.

#### Effective Date

(a) This airworthiness directive (AD) becomes effective April 13, 2010.

#### Affected ADs

(b) None.

#### Applicability

(c) This AD applies to Bombardier Model DHC–8–102, DHC–8–103, DHC–8–106, DHC–8–201, and DHC–8–202 series airplanes; certificated in any category; serial numbers 003 through 663 inclusive.

#### Subject

(d) Air Transport Association (ATA) of America Code 57: Wings.

#### Reason

(e) The mandatory continuing airworthiness information (MCAI) states:

During a puncture voltage test of the aluminum-loaded paint on an in-service DHC–8 aircraft, conducted to validate an SFAR 88 [Special Federal Aviation Regulation No. 88] related task, Bombardier Aerospace (BA) discovered that the top wing

fuel tank skin between Yw171.20 and Yw261.00 was painted with a non-aluminized enamel coating due to a misinterpretation of the painting instructions in the Structural Repair Manual (SRM).

With this type of paint application, it is possible that, in the worst case scenario, a lightning strike could puncture the wing skin and create an ignition source in the fuel tank. Ignition sources inside fuel tanks, in combination with flammable fuel vapors, could result in fuel tank explosions and consequent loss of the airplane. Required actions include performing a functional check of the dielectric properties of the fuel tank skin for aluminum-loaded primer and aluminum-loaded enamel coating. For airplanes on which the aluminum-loaded primer and aluminum-loaded enamel coating have been properly applied, the required actions include restoring the protective finish on the areas where the surface finish was removed. For airplanes on which the aluminum-loaded primer and aluminum-loaded enamel coating have not been applied or have not been properly applied, the required actions include stripping the affected wing skin surfaces to bare metal and applying alodine coating to those areas, performing a detailed visual inspection of the stripped areas for any sign of corrosion or deterioration of the protective alodine coating and re-applying the protective alodine coating, and painting the affected wing skin surfaces with aluminum-loaded primer and aluminum-loaded enamel coating.

**Actions and Compliance**

(f) Unless already done, do the following actions.

(1) For airplanes on which Bombardier Modification 8/0024 has not been done: Within 18 months after the effective date of this AD, perform a functional check of the dielectric properties of the fuel tank skin between Yw171.20 and Yw261.00 of the upper and lower wing for aluminum-loaded primer and aluminum-loaded enamel coating, in accordance with the Accomplishment Instructions of Bombardier Service Bulletin 8–57–46, Revision A, dated February 6, 2009.

(2) For airplanes on which Bombardier Modification 8/0024 has been done: Within 18 months after the effective date of this AD, perform a functional check of the dielectric properties of the fuel tank skin between Yw171.20 and Yw261.00 of the upper wing for aluminum-loaded primer and aluminum-loaded enamel coating, in accordance with the Accomplishment Instructions of Bombardier Service Bulletin 8–57–46, Revision A, dated February 6, 2009.

(3) If the functional check required by paragraph (f)(1) or (f)(2) of this AD indicates that the aluminum-loaded primer and aluminum-loaded enamel coating have been properly applied, as defined in the Accomplishment Instructions of Bombardier Service Bulletin 8–57–46, Revision A, dated February 6, 2009: Before further flight, restore the protective finish on the areas where the surface finish was removed for the functional check, in accordance with the Accomplishment Instructions of Bombardier Service Bulletin 8–57–46, Revision A, dated February 6, 2009.

(4) If the functional check required by paragraph (f)(1) or (f)(2) of this AD indicates that the aluminum-loaded primer and aluminum-loaded enamel coating have not been applied or have not been properly applied, as defined in the Accomplishment Instructions of Bombardier Service Bulletin 8–57–46, Revision A, dated February 6, 2009: Perform the actions required by paragraphs (f)(4)(i), (f)(4)(ii), and (f)(4)(iii) of this AD, in accordance with the Accomplishment Instructions of Bombardier Service Bulletin 8–57–46, Revision A, dated February 6, 2009.

(i) Before further flight, strip the affected wing skin surfaces to bare metal and apply alodine coating to those areas, in accordance with Bombardier Service Bulletin 8–57–46, Revision A, dated February 6, 2009.

(ii) Within 90 flight hours after performing the actions required by paragraph (f)(4)(i) of this AD, and thereafter at intervals not to exceed 90 flight hours: Perform a detailed visual inspection of the stripped areas for any sign of corrosion or deterioration of the protective alodine coating, and re-apply the protective alodine coating, in accordance with Bombardier Service Bulletin 8–57–46, Revision A, dated February 6, 2009.

(iii) Within 3 months after performing the actions required by paragraph (f)(1) or (f)(2) of this AD, as applicable: Paint the affected wing skin surfaces with aluminum-loaded primer and aluminum-loaded enamel coating, in accordance with Bombardier Service Bulletin 8–57–46, Revision A, dated February 6, 2009.

(5) Accomplishment of the actions required by paragraph (f)(1) or (f)(2) of this AD, as applicable, before the effective date of this AD, in accordance with Bombardier Service Bulletin 8–57–46, dated September 29, 2008, is acceptable for compliance with the corresponding requirements of this AD.

(6) Accomplishment of the actions required by paragraph (f)(1) or (f)(2) of this AD, as applicable, in accordance with AD 2008–13–09, Amendment 39–15572, is acceptable for compliance with the corresponding requirements of this AD, provided the actions are done within the applicable compliance times specified in this AD.

**FAA AD Differences**

**Note 1:** This AD differs from the MCAI and/or service information as follows: No differences.

**Other FAA AD Provisions**

(g) The following provisions also apply to this AD:

(1) *Alternative Methods of Compliance (AMOCs):* The Manager, New York Aircraft Certification Office, ANE–170, FAA, has the authority to approve AMOCs for this AD, if requested using the procedures found in 14 CFR 39.19. Send information to ATTN: Program Manager, Continuing Operational Safety, FAA, New York ACO, 1600 Stewart Avenue, Suite 410, Westbury, New York 11590; telephone 516–228–7300; fax 516–794–5531. Before using any approved AMOC on any airplane to which the AMOC applies, notify your principal maintenance inspector (PMI) or principal avionics inspector (PAI), as appropriate, or lacking a principal inspector, your local Flight Standards District Office. The AMOC approval letter must specifically reference this AD.

(2) *Airworthy Product:* For any requirement in this AD to obtain corrective actions from a manufacturer or other source, use these actions if they are FAA-approved. Corrective actions are considered FAA-approved if they are approved by the State of Design Authority (or their delegated agent). You are required to assure the product is airworthy before it is returned to service.

(3) *Reporting Requirements:* For any reporting requirement in this AD, under the provisions of the Paperwork Reduction Act (44 U.S.C. 3501 *et seq.*), the Office of Management and Budget (OMB) has approved the information collection requirements and has assigned OMB Control Number 2120–0056.

**Related Information**

(h) Refer to Canadian Airworthiness Directive CF–2009–05, dated January 29, 2009; and Bombardier Service Bulletin 8–57–46, Revision A, dated February 6, 2009; for related information.

**Material Incorporated by Reference**

(i) You must use Bombardier Service Bulletin 8–57–46, Revision A, dated February 6, 2009, to do the actions required by this AD, unless the AD specifies otherwise.

(1) The Director of the Federal Register approved the incorporation by reference of this service information under 5 U.S.C. 552(a) and 1 CFR part 51.

(2) For service information identified in this AD, contact Bombardier, Inc., 400 Côte-Vertu Road West, Dorval, Québec H4S 1Y9, Canada; telephone 514–855–5000; fax 514–855–7401; e-mail *thd.qseries@aero.bombardier.com;* Internet *http://www.bombardier.com.*

(3) You may review copies of the service information at the FAA, Transport Airplane Directorate, 1601 Lind Avenue, SW., Renton, Washington. For information on the availability of this material at the FAA, call 425–227–1221 or 425–227–1152.

(4) You may also review copies of the service information that is incorporated by reference at the National Archives and Records Administration (NARA). For information on the availability of this material at NARA, call 202–741–6030, or go to: *http://www.archives.gov/federal_register/code_of_federal_regulations/ibr_locations.html.*

Issued in Renton, Washington, on February 24, 2010.

**Jeffrey E. Duven,**

*Acting Manager, Transport Airplane Directorate, Aircraft Certification Service.*

[FR Doc. 2010–4652 Filed 3–8–10; 8:45 am]

**BILLING CODE 4910–13–P**

**DEPARTMENT OF TRANSPORTATION**

**Federal Aviation Administration**

**14 CFR Part 39**

**[Docket No. FAA–2010–0178; Directorate Identifier 2010–NM–039–AD; Amendment 39–16224; AD 2010–05–14]**

**RIN 2120–AA64**

## Airworthiness Directives; Bombardier, Inc. Model CL–600–2B19 (Regional Jet Series 100 & 440) Airplanes

**AGENCY:** Federal Aviation Administration (FAA), Department of Transportation (DOT).

**ACTION:** Final rule; request for comments.

**SUMMARY:** We are adopting a new airworthiness directive (AD) for the products listed above. This AD results from mandatory continuing airworthiness information (MCAI) originated by an aviation authority of another country to identify and correct an unsafe condition on an aviation product. The MCAI describes the unsafe condition as:

The manufacturer has informed Transport Canada that a certain number of the resolver stators, which were installed in the AOA [angle of attack] transducers, were not cleaned correctly. This condition can degrade the AOA transducer performance at low temperatures resulting in freezing of the AOA transducer resolver, which may provide inaccurate AOA data to the Stall Protection System (SPS). If not corrected, this condition can result in early or late activation of the stick shaker and/or stick pusher.

The unsafe condition is early or late activation of the stick shaker or stick pusher, which can lead to loss of control of the airplane. This AD requires actions that are intended to address the unsafe condition described in the MCAI.

**DATES:** This AD becomes effective March 24, 2010.

The Director of the Federal Register approved the incorporation by reference of a certain publication listed in the AD as of March 24, 2010.

We must receive comments on this AD by April 23, 2010.

**ADDRESSES:** You may send comments by any of the following methods:

- *Federal eRulemaking Portal:* Go to *http://www.regulations.gov.* Follow the instructions for submitting comments.
- *Fax:* (202) 493–2251.
- *Mail:* U.S. Department of Transportation, Docket Operations, M–30, West Building Ground Floor, Room W12–140, 1200 New Jersey Avenue, SE., Washington, DC 20590.
- *Hand Delivery:* U.S. Department of Transportation, Docket Operations, M–30, West Building Ground Floor, Room W12–40, 1200 New Jersey Avenue, SE., Washington, DC, between 9 a.m. and 5 p.m., Monday through Friday, except Federal holidays.

### Examining the AD Docket

You may examine the AD docket on the Internet at *http://www.regulations.gov;* or in person at the Docket Operations office between 9 a.m. and 5 p.m., Monday through Friday, except Federal holidays. The AD docket contains this AD, the regulatory evaluation, any comments received, and other information. The street address for the Docket Operations office (telephone (800) 647–5527) is in the **ADDRESSES** section. Comments will be available in the AD docket shortly after receipt.

**FOR FURTHER INFORMATION CONTACT:** Wing Chan, Aerospace Engineer, Avionics and Flight Test Branch, ANE–172, FAA, New York Aircraft Certification Office (ACO), 1600 Stewart Avenue, Suite 410, Westbury, New York 11590; telephone (516) 228–7311; fax (516) 794–5531.

**SUPPLEMENTARY INFORMATION:**

### Discussion

Transport Canada Civil Aviation, which is the aviation authority for Canada, has issued Canadian Airworthiness Directive CF–2010–04, dated January 27, 2010 (referred to after this as "the MCAI"), to correct an unsafe condition for the specified products. The MCAI states:

The manufacturer has informed Transport Canada that a certain number of the resolver stators, which were installed in the AOA [angle of attack] transducers, were not cleaned correctly. This condition can degrade the AOA transducer performance at low temperatures resulting in freezing of the AOA transducer resolver, which may provide inaccurate AOA data to the Stall Protection System (SPS). If not corrected, this condition can result in early or late activation of the stick shaker and/or stick pusher.

The unsafe condition is early or late activation of the stick shaker or stick pusher, which can lead to loss of control of the airplane. The required actions include inspecting to determine if certain AOA transducers are installed, and replacement if necessary. You may obtain further information by examining the MCAI in the AD docket.

### Relevant Service Information

Bombardier has issued Alert Service Bulletin A601R–27–157, Revision A, dated January 18, 2010. The actions described in this service information are intended to correct the unsafe condition identified in the MCAI.

### FAA's Determination and Requirements of This AD

This product has been approved by the aviation authority of another country, and is approved for operation in the United States. Pursuant to our bilateral agreement with the State of Design Authority, we have been notified of the unsafe condition described in the MCAI and service information referenced above. We are issuing this AD because we evaluated all pertinent information and determined the unsafe condition exists and is likely to exist or develop on other products of the same type design.

### Differences Between the AD and the MCAI or Service Information

We have reviewed the MCAI and related service information and, in general, agree with their substance. But we might have found it necessary to use different words from those in the MCAI to ensure the AD is clear for U.S. operators and is enforceable. In making these changes, we do not intend to differ substantively from the information provided in the MCAI and related service information.

We might also have required different actions in this AD from those in the MCAI in order to follow FAA policies. Any such differences are highlighted in a NOTE within the AD.

### FAA's Determination of the Effective Date

An unsafe condition exists that requires the immediate adoption of this AD. The FAA has found that the risk to the flying public justifies waiving notice and comment prior to adoption of this rule because a certain number of the resolver stators, which were installed in the AOA transducers, were not cleaned correctly. This condition can degrade the AOA transducer performance at low temperatures, resulting in freezing of the AOA transducer resolver, which may provide inaccurate AOA data to the SPS. If not corrected, this condition can result in early or late activation of the stick shaker and/or stick pusher. Therefore, we determined that notice and opportunity for public comment before issuing this AD are impracticable and that good cause exists for making this amendment effective in fewer than 30 days.

### Comments Invited

This AD is a final rule that involves requirements affecting flight safety, and we did not precede it by notice and opportunity for public comment. We invite you to send any written relevant data, views, or arguments about this AD. Send your comments to an address

listed under the **ADDRESSES** section. Include "Docket No. FAA–2010–0178; Directorate Identifier 2010–NM–039–AD" at the beginning of your comments. We specifically invite comments on the overall regulatory, economic, environmental, and energy aspects of this AD. We will consider all comments received by the closing date and may amend this AD because of those comments.

We will post all comments we receive, without change, to *http://www.regulations.gov,* including any personal information you provide. We will also post a report summarizing each substantive verbal contact we receive about this AD.

## Authority for This Rulemaking

Title 49 of the United States Code specifies the FAA's authority to issue rules on aviation safety. Subtitle I, section 106, describes the authority of the FAA Administrator. "Subtitle VII: Aviation Programs," describes in more detail the scope of the Agency's authority.

We are issuing this rulemaking under the authority described in "Subtitle VII, Part A, Subpart III, Section 44701: General requirements." Under that section, Congress charges the FAA with promoting safe flight of civil aircraft in air commerce by prescribing regulations for practices, methods, and procedures the Administrator finds necessary for safety in air commerce. This regulation is within the scope of that authority because it addresses an unsafe condition that is likely to exist or develop on products identified in this rulemaking action.

## Regulatory Findings

We determined that this AD will not have federalism implications under Executive Order 13132. This AD will not have a substantial direct effect on the States, on the relationship between the national government and the States, or on the distribution of power and responsibilities among the various levels of government.

For the reasons discussed above, I certify this AD:

1. Is not a "significant regulatory action" under Executive Order 12866;

2. Is not a "significant rule" under the DOT Regulatory Policies and Procedures (44 FR 11034, February 26, 1979); and

3. Will not have a significant economic impact, positive or negative, on a substantial number of small entities under the criteria of the Regulatory Flexibility Act.

We prepared a regulatory evaluation of the estimated costs to comply with this AD and placed it in the AD docket.

## List of Subjects in 14 CFR Part 39

Air transportation, Aircraft, Aviation safety, Incorporation by reference, Safety.

## Adoption of the Amendment

■ Accordingly, under the authority delegated to me by the Administrator, the FAA amends 14 CFR part 39 as follows:

## PART 39—AIRWORTHINESS DIRECTIVES

■ 1. The authority citation for part 39 continues to read as follows:

**Authority:** 49 U.S.C. 106(g), 40113, 44701.

### § 39.13 [Amended]

■ 2. The FAA amends § 39.13 by adding the following new AD:

**2010–05–14 Bombardier, Inc.:** Amendment 39–16224. Docket No. FAA–2010–0178; Directorate Identifier 2010–NM–039–AD.

**Effective Date**

(a) This airworthiness directive (AD) becomes effective March 24, 2010.

**Affected ADs**

(b) None.

**Applicability**

(c) This AD applies to Bombardier, Inc. Model CL–600–2B19 (Regional Jet Series 100 & 440) airplanes, certificated in any category, serial numbers (S/Ns) 7003 and subsequent equipped with Thales angle of attack (AOA) transducers having part number (P/N) 45150340 or P/N C16258AA.

**Subject**

(d) Air Transport Association (ATA) of America Code 27: Flight Controls.

**Reason**

(e) The mandatory continued airworthiness information (MCAI) states:

"The manufacturer has informed Transport Canada that a certain number of the resolver stators, which were installed in the AOA transducers, were not cleaned correctly. This condition can degrade the AOA transducer performance at low temperatures resulting in freezing of the AOA transducer resolver, which may provide inaccurate AOA data to the Stall Protection System (SPS). If not corrected, this condition can result in early or late activation of the stick shaker and/or stick pusher."

The unsafe condition is early or late activation of the stick shaker or stick pusher, which can lead to loss of control of the airplane. The required actions include inspecting to determine if certain AOA transducers are installed, and replacement if necessary.

**Compliance**

(f) You are responsible for having the actions required by this AD performed within the compliance times specified, unless the actions have already been done.

**Actions**

(g) Do the following actions.

(1) Within 250 flight hours after the effective date of this AD, inspect to determine if the serial number of each AOA transducer having P/N 45150340 or P/N C16258AA is listed in paragraph 1.A. of Bombardier Alert Service Bulletin A601R–27–157, Revision A, dated January 18, 2010. A review of airplane maintenance records is acceptable in lieu of this inspection if the serial number of the AOA transducer can be conclusively determined from that review.

(i) If the serial number is not listed in paragraph 1.A. of Bombardier Alert Service Bulletin A601R–27–157, Revision A, dated January 18, 2010, no further action is required other than compliance with paragraph (g)(2) of this AD.

(ii) If the serial number is listed in paragraph 1.A. of Bombardier Alert Service Bulletin A601R–27–157, Revision A, dated January 18, 2010, and the serial number has the letter "C", no further action is required other than compliance with paragraph (g)(2) of this AD.

(iii) If the serial number is listed in paragraph 1.A. of Bombardier Alert Service Bulletin A601R–27–157, Revision A, dated January 18, 2010, and the serial number does not have the letter "C": Before further flight, replace the AOA transducer with an AOA transducer that is either outside the affected serial numbers identified in paragraph 1.A. of Bombardier Alert Service Bulletin A601R–27–157, Revision A, dated January 18, 2010, or that has the letter "C" after the serial number, in accordance with paragraph 2., Part C, of the Accomplishment Instructions of Bombardier Alert Service Bulletin A601R–27–157, Revision A, dated January 18, 2010.

(2) As of the effective date of this AD, do not install any replacement AOA transducer having P/N 45150340 or P/N C16258AA, having a serial number listed in paragraph 1.A. of Bombardier Alert Service Bulletin A601R–27–157, Revision A, dated January 18, 2010, on any airplane, unless the transducer has been inspected by the manufacturer and has the letter "C" after the serial number.

**FAA AD Differences**

**Note 1:** This AD differs from the MCAI and/or service information as follows: No differences.

**Other FAA AD Provisions**

(h) The following provisions also apply to this AD:

(1) *Alternative Methods of Compliance (AMOCs):* The Manager, New York Aircraft Certification Office (ACO), ANE–170, FAA, has the authority to approve AMOCs for this AD, if requested using the procedures found in 14 CFR 39.19. Send information to ATTN: Program Manager, Continuing Operational Safety, FAA, New York ACO, 1600 Stewart Avenue, Suite 410, Westbury, New York 11590; telephone 516–228–7300; fax 516–794–5531. Before using any approved AMOC on any airplane to which the AMOC applies, notify your principal maintenance inspector (PMI) or principal avionics inspector (PAI), as appropriate, or lacking a principal inspector, your local Flight Standards District

Office. The AMOC approval letter must specifically reference this AD.

(2) *Airworthy Product:* For any requirement in this AD to obtain corrective actions from a manufacturer or other source, use these actions if they are FAA-approved. Corrective actions are considered FAA-approved if they are approved by the State of Design Authority (or their delegated agent). You are required to assure the product is airworthy before it is returned to service.

(3) *Reporting Requirements:* For any reporting requirement in this AD, under the provisions of the Paperwork Reduction Act (44 U.S.C. 3501 *et seq.*), the Office of Management and Budget (OMB) has approved the information collection requirements and has assigned OMB Control Number 2120–0056.

**Related Information**

(i) Refer to MCAI Canadian Airworthiness Directive CF–2010–04, dated January 27, 2010; and Bombardier Alert Service Bulletin A601R–27–157, Revision A, dated January 18, 2010; for related information.

**Material Incorporated by Reference**

(j) You must use Bombardier Alert Service Bulletin A601R–27–157, Revision A, dated January 18, 2010, to do the actions required by this AD, unless the AD specifies otherwise.

(1) The Director of the Federal Register approved the incorporation by reference of this service information under 5 U.S.C. 552(a) and 1 CFR part 51.

(2) For service information identified in this AD, contact Bombardier, Inc., 400 Côte-Vertu Road West, Dorval, Québec H4S 1Y9, Canada; telephone 514–855–5000; fax 514–855–7401; e-mail *thd.crj@aero.bombardier.com;* Internet *http://www.bombardier.com.*

(3) You may review copies of the service information at the FAA, Transport Airplane Directorate, 1601 Lind Avenue, SW., Renton, Washington. For information on the availability of this material at the FAA, call 425–227–1221 or 425–227–1152.

(4) You may also review copies of the service information that is incorporated by reference at the National Archives and Records Administration (NARA). For information on the availability of this material at NARA, call 202–741–6030, or go to: *http://www.archives.gov/federal_register/code_of_federal_regulations/ibr_locations.html.*

Issued in Renton, Washington, on February 24, 2010.

**Jeffrey E. Duven,**

*Acting Manager, Transport Airplane Directorate, Aircraft Certification Service.*

[FR Doc. 2010–4712 Filed 3–8–10; 8:45 am]

BILLING CODE 4910–13–P

## DEPARTMENT OF TRANSPORTATION

## Federal Aviation Administration

## 14 CFR Part 39

**[Docket No. FAA–2008–0376; Directorate Identifier 2007–NM–322–AD; Amendment 39–16221; AD 2010–05–11]**

**RIN 2120–AA64**

## Airworthiness Directives; The Boeing Company Model 747–100, 747–200B, 747–300, and 747SR Series Airplanes

**AGENCY:** Federal Aviation Administration (FAA), DOT.

**ACTION:** Final rule.

**SUMMARY:** We are adopting a new airworthiness directive (AD) for certain Model 747–100, 747–200B, 747–300, and 747SR series airplanes. This AD requires installation of a closeout panel and moisture curtains for the main equipment center. This AD results from a report of water contamination in the electrical and electronic units in the main equipment center. We are issuing this AD to prevent the malfunction of one or more electrical and electronic units in the main equipment center, which could adversely affect the airplane's continued safe flight.

**DATES:** This AD is effective April 13, 2010.

The Director of the Federal Register approved the incorporation by reference of a certain publication listed in the AD as of April 13, 2010.

**ADDRESSES:** For service information identified in this AD, contact Boeing Commercial Airplanes, Attention: Data & Services Management, P.O. Box 3707, MC 2H–65, Seattle, Washington 98124–2207; telephone 206–544–5000, extension 1; fax 206–766–5680; e-mail *me.boecom@boeing.com*; Internet *https://www.myboeingfleet.com.*

**Examining the AD Docket**

You may examine the AD docket on the Internet at *http://www.regulations.gov;* or in person at the Docket Management Facility between 9 a.m. and 5 p.m., Monday through Friday, except Federal holidays. The AD docket contains this AD, the regulatory evaluation, any comments received, and other information. The address for the Docket Office (telephone 800–647–5527) is the Document Management Facility, U.S. Department of Transportation, Docket Operations, M–30, West Building Ground Floor, Room W12–140, 1200 New Jersey Avenue, SE., Washington, DC 20590.

**FOR FURTHER INFORMATION CONTACT:** Marcia Smith, Aerospace Engineer, Cabin Safety and Environmental Systems Branch, ANM–150S, FAA, Seattle Aircraft Certification Office, 1601 Lind Avenue, SW., Renton, Washington 98057–3356; telephone (425) 917–6484; fax (425) 917–6590.

**SUPPLEMENTARY INFORMATION:**

**Discussion**

We issued a supplemental notice of proposed rulemaking (NPRM) to amend 14 CFR part 39 to include an airworthiness directive (AD) that would apply to certain Boeing Model 747–100, 747–200B, 747–300, and 747SR series airplanes. That supplemental NPRM was published in the **Federal Register** on September 25, 2009 (74 FR 48882). That supplemental NPRM proposed to require installation of a closeout panel and moisture curtains for the main equipment center.

**Comments**

We gave the public the opportunity to participate in developing this AD. We considered the comment received from the sole commenter.

**Request to Reference Revised Service Bulletin**

Boeing requests that we revise the supplemental NPRM to refer to Revision 1, dated June 25, 2007, of Boeing Alert Service Bulletin 747–25A3346 for the shroud installation (paragraph (g) in the original NPRM). Boeing states that Revision 1 reroutes the forward drain tube installation, revises the pitot static lines, revises the moisture shroud inboard bracket installation, and revises the wire routing.

We disagree with Boeing's request. As noted in the supplemental NPRM, we have removed the requirement to perform any actions in accordance with Boeing Alert Service Bulletin 747–25A3346. We have not changed the AD in this regard.

**Conclusion**

We reviewed the relevant data, considered the comment received, and determined that air safety and the public interest require adopting the AD as proposed.

**Interim Action**

We consider this AD interim action. The manufacturer is currently developing a modification that will address the unsafe condition identified in this AD. Once this modification is developed, approved, and available, we might consider additional rulemaking.

**Explanation of Change to Costs of Compliance**

Since issuance of the NPRM, we have increased the labor rate used in the Costs of Compliance from $80 per work-hour to $85 per work-hour. The Costs of Compliance information, below, reflects this increase in the specified hourly labor rate.

**Costs of Compliance**

We estimate that this AD affects 47 airplanes of U.S. registry. The following table provides the estimated costs, at an average labor rate of $85 per work hour, for U.S. operators to comply with this AD.

ESTIMATED COSTS

| Action | Work hours | Parts | Cost per product | Number of U.S.-registered airplanes | Fleet cost |
|---|---|---|---|---|---|
| Installation | Up to 10 | Up to $11,672 | Up to $12,522 | 47 | Up to $588,534. |

**Authority for This Rulemaking**

Title 49 of the United States Code specifies the FAA's authority to issue rules on aviation safety. Subtitle I, section 106, describes the authority of the FAA Administrator. "Subtitle VII: Aviation Programs," describes in more detail the scope of the Agency's authority.

We are issuing this rulemaking under the authority described in "Subtitle VII, Part A, Subpart III, Section 44701: General requirements." Under that section, Congress charges the FAA with promoting safe flight of civil aircraft in air commerce by prescribing regulations for practices, methods, and procedures the Administrator finds necessary for safety in air commerce. This regulation is within the scope of that authority because it addresses an unsafe condition that is likely to exist or develop on products identified in this rulemaking action.

**Regulatory Findings**

This AD will not have federalism implications under Executive Order 13132. This AD will not have a substantial direct effect on the States, on the relationship between the national government and the States, or on the distribution of power and responsibilities among the various levels of government.

For the reasons discussed above, I certify that this AD:

(1) Is not a "significant regulatory action" under Executive Order 12866,

(2) Is not a "significant rule" under DOT Regulatory Policies and Procedures (44 FR 11034, February 26, 1979), and

(3) Will not have a significant economic impact, positive or negative, on a substantial number of small entities under the criteria of the Regulatory Flexibility Act.

You can find our regulatory evaluation and the estimated costs of compliance in the AD Docket.

**List of Subjects in 14 CFR Part 39**

Air transportation, Aircraft, Aviation safety, Incorporation by reference, Safety.

**Adoption of the Amendment**

■ Accordingly, under the authority delegated to me by the Administrator, the FAA amends 14 CFR part 39 as follows:

## PART 39—AIRWORTHINESS DIRECTIVES

■ 1. The authority citation for part 39 continues to read as follows:

**Authority:** 49 U.S.C. 106(g), 40113, 44701.

**§ 39.13 [Amended]**

■ 2. The FAA amends § 39.13 by adding the following new AD:

**2010–05–11 The Boeing Company:** Amendment 39–16221. Docket No. FAA–2008–0376; Directorate Identifier 2007–NM–322–AD.

**Effective Date**

(a) This airworthiness directive (AD) is effective April 13, 2010.

**Affected ADs**

(b) None.

**Applicability**

(c) This AD applies to The Boeing Company Model 747–100, 747–200B, 747–300, and 747SR series airplanes, certificated in any category; as identified in Boeing Service Bulletin 747–25A3368, Revision 2, dated June 12, 2008.

**Note 1:** The affected airplanes are those that have been converted by Boeing to the Boeing Special Freighter configuration.

**Subject**

(d) Air Transport Association (ATA) of America Code 25: Equipment/furnishings.

**Unsafe Condition**

(e) This AD results from a report of water contamination in the electrical and electronic units in the main equipment center. We are issuing this AD to prevent the malfunction of one or more electrical and electronic units in the main equipment center, which could adversely affect the airplane's continued safe flight.

**Compliance**

(f) You are responsible for having the actions required by this AD performed within the compliance times specified, unless the actions have already been done.

**Install the Closeout Panel and Moisture Curtains**

(g) Within 24 months after the effective date of this AD, install the closeout panel and moisture curtains for the main equipment center, by accomplishing all of the applicable actions specified in the Accomplishment Instructions of Boeing Service Bulletin 747–25A3368, Revision 2, dated June 12, 2008.

**Credit for Actions Done According to Previous Issue of the Service Bulletin**

(h) Actions done before the effective date of this AD in accordance with the Accomplishment Instructions in Boeing Alert Service Bulletin 747–25A3368, dated August 25, 2005, are acceptable for compliance with the corresponding actions required by paragraph (g) of this AD, provided that the additional work specified in the Accomplishment Instructions of Boeing Alert Service Bulletin 747–25A3368, Revision 1, dated June 25, 2007; or Revision 2, dated June 12, 2008; is accomplished. The additional work required is to cap seal all rivets fastening the mounting base assembly to the moisture shroud as given in Figure 10 in Boeing Alert Service Bulletin 747–25A3368, Revision 2, dated June 12, 2008, and to fill any unused pilot holes in the mounting base assembly in accordance with the Accomplishment Instructions of Boeing Alert Service Bulletin 747–25A3368, Revision 2, dated June 12, 2008; or cap seal all rivets fastening the mounting base assembly to the moisture shroud as given in Figure 10 of Boeing Alert Service Bulletin 747–25A3368, Revision 1, dated June 25, 2007, and to fill any unused pilot holes in the mounting base assembly in accordance with the Accomplishment Instructions of Boeing Alert Service Bulletin 747–25A3368, Revision 1, dated June 25, 2007.

(i) Actions done before the effective date of this AD in accordance with Boeing Alert Service Bulletin 747–25A3368, Revision 1, dated June 25, 2007, are acceptable for compliance with the corresponding actions required by paragraph (g) of this AD.

**Alternative Methods of Compliance (AMOCs)**

(j)(1) The Manager, Seattle Aircraft Certification Office, FAA, has the authority to approve AMOCs for this AD, if requested using the procedures found in 14 CFR 39.19. Send information to ATTN: Marcia Smith, Aerospace Engineer, Cabin Safety and Environmental Systems Branch, ANM–150S, FAA, Seattle Aircraft Certification Office, 1601 Lind Avenue SW., Renton, Washington 98057–3356; telephone (425) 917–6484; fax (425) 917–6590. Or, e-mail information to *9-ANM-Seattle-ACO-AMOC-Requests@faa.gov.*

(2) To request a different method of compliance or a different compliance time for this AD, follow the procedures in 14 CFR 39.19. Before using any approved AMOC on any airplane to which the AMOC applies, notify your principal maintenance inspector (PMI) or principal avionics inspector (PAI), as appropriate, or lacking a principal inspector, your local Flight Standards District Office. The AMOC approval letter must specifically reference this AD.

**Material Incorporated by Reference**

(k) You must use Boeing Service Bulletin 747–25A3368, Revision 2, dated June 12, 2008, to do the actions required by this AD, unless the AD specifies otherwise.

(1) The Director of the Federal Register approved the incorporation by reference of this service information under 5 U.S.C. 552(a) and 1 CFR part 51.

(2) For service information identified in this AD, contact Boeing Commercial Airplanes, Attention: Data & Services Management, P.O. Box 3707, MC 2H–65, Seattle, Washington 98124–2207; telephone 206–544–5000, extension 1; fax 206–766–5680; e-mail *me.boecom@boeing.com;* Internet *https://www.myboeingfleet.com.*

(3) You may review copies of the service information at the FAA, Transport Airplane Directorate, 1601 Lind Avenue, SW., Renton, Washington. For information on the availability of this material at the FAA, call 425–227–1221 or 425–227–1152.

(4) You may also review copies of the service information that is incorporated by reference at the National Archives and Records Administration (NARA). For information on the availability of this material at NARA, call 202–741–6030, or go to: *http://www.archives.gov/federal_register/code_of_federal_regulations/ibr_locations.html.*

Issued in Renton, Washington, on February 25, 2010.

**Jeffrey E. Duven,**

*Acting Manager, Transport Airplane Directorate, Aircraft Certification Service.*

[FR Doc. 2010–4650 Filed 3–8–10; 8:45 am]

BILLING CODE 4910–13–P

## DEPARTMENT OF JUSTICE

## Drug Enforcement Administration

## 21 CFR Parts 1301, 1303, 1304, 1307, 1308, 1309, 1310, 1312, 1313, 1314, 1315, 1316, 1321

**[Docket No. DEA–312F]**

**RIN 1117–AB19**

## Changes to and Consolidation of DEA Mailing Addresses

**AGENCY:** Drug Enforcement Administration (DEA), Department of Justice.

**ACTION:** Final rule.

**SUMMARY:** DEA is amending Title 21 of the Code of Federal Regulations (CFR) to update and consolidate existing mailing addresses. Mailing addresses are being removed from the individual sections in which they currently appear and are being consolidated into one table in a new part 1321. DEA is making this change to the CFR to ensure registrants have the most current and accurate information, reduce administrative costs, and facilitate future address changes. A statement directing persons to the Table of DEA Mailing Addresses within the CFR is being provided in place of specific mailing addresses.

**DATES:** *Effective Date:* This rule is effective March 9, 2010.

**FOR FURTHER INFORMATION CONTACT:** Mark W. Caverly, Chief, Liaison and Policy Section, Office of Diversion Control, Drug Enforcement Administration, 8701 Morrissette Drive, Springfield, VA 22152, Telephone (202) 307–7297.

**SUPPLEMENTARY INFORMATION:**

### DEA's Legal Authority

DEA implements the Comprehensive Drug Abuse Prevention and Control Act of 1970, often referred to as the Controlled Substances Act (CSA) and Controlled Substances Import and Export Act (21 U.S.C. 801–971), as amended. DEA publishes the implementing regulations for these statutes in Title 21 of the Code of Federal Regulations (CFR), parts 1300 to end. These regulations are designed to ensure that there is a sufficient supply of controlled substances for legitimate medical purposes and to deter the diversion of controlled substances to illegal purposes.

Controlled substances are drugs and other substances that have a potential for abuse and psychological and physical dependence; these include substances classified as opioids, stimulants, depressants, hallucinogens, anabolic steroids, and drugs that are immediate precursors of these classes of substances. The CSA mandates that DEA establish a closed system of control for manufacturing, distributing, and dispensing controlled substances. Any person who manufactures, distributes, dispenses, imports, exports, or conducts research or chemical analysis with controlled substances must register with DEA (unless exempt) and comply with the applicable requirements for the activity.

The CSA, as amended, also requires DEA to regulate the manufacture, distribution, importation, and exportation of chemicals that may be used to manufacture controlled substances. Listed chemicals that are classified as List I chemicals are important to the manufacture of controlled substances. Those classified as List II chemicals may be used to manufacture controlled substances. Registrants are also required to provide other reports and information to DEA on an ongoing basis in compliance with a variety of statutory and regulatory obligations.

### Background

Currently, 21 CFR parts 1300 to end contain numerous office names and mailing addresses to which specific forms and other information are to be sent. However, oftentimes these mailing addresses and office names are not consistent and many are no longer accurate. DEA became aware of this internal inconsistency when it determined that, to improve agency management and efficiency, its Washington, DC, addresses would be moved to other locations. As DEA reviewed the number of addresses contained in 21 CFR, it became clear that a significant administrative burden would be involved in updating these addresses. DEA recognized that this administrative burden could potentially not be a one-time occurrence; that is, it is quite possible that DEA might move some of its mailing addresses in the future, necessitating further revisions to the CFR.

For registrants to have the most current mailing addresses to which applications, forms, and other materials are to be sent, DEA believes directing registrants and other interested persons to a single location within the CFR is the most practical way to convey current mailing address information. To address this, DEA is establishing a new part 1321 in the CFR that will contain the Table of DEA Mailing Addresses. Providing this information in the table format in the CFR allows for easy retrieval of necessary information in

multiple formats. By consolidating this information into a table within the CFR, DEA will be able to rapidly respond should mailing addresses change due to facility relocation, special mail handling procedures, or other circumstances.

With publication of this Final Rule, all entries citing DEA mailing addresses will be removed and replaced with language directing interested persons to the Table of DEA Mailing Addresses found at 21 CFR 1321.01.

**Information Affected by the Removal of Addresses**

As noted previously, the current CFR contains numerous addresses specific to applications, forms, and other information to be physically mailed to DEA. Below are two tables. The first table lists the CFR section which previously contained a mailing address, the subject, and the corresponding DEA office that is responsible for that activity. The second table provides the mailing address information that will be provided in 21 CFR 1321.01.

TABLE 1—MAILING ADDRESSES REFERENCED IN THE CFR

| CFR Section | Subject | DEA Office |
|---|---|---|
| 1301.03 | Procedures information request (controlled substances registration) | DEA Registration Section. |
| 1301.13(e)(2) | Request DEA Forms 224, 225, and 363 | DEA Registration Section. |
| 1301.14(a) | Controlled substances registration application submission | DEA Registration Section. |
| 1301.18(c) | Research project controlled substance increase request | DEA Registration Section. |
| 1301.51 | Controlled substances registration modification request | DEA Registration Section. |
| 1301.52(b) | Controlled substances registration transfer request | DEA Registration Section. |
| 1301.52(c) | Controlled substances registration return for cancellation | DEA Office of Diversion Control. |
| 1301.71(d) | Controlled substances security system compliance review | DEA Regulatory Section. |
| 1303.12(b) | Application for controlled substances procurement quota (DEA Form 250) filing and request. | DEA Drug & Chemical Evaluation Section. |
| 1303.12(d) | Controlled substances quota adjustment request | DEA Drug & Chemical Evaluation Section. |
| 1303.22 | Application for individual manufacturing quota (DEA Form 189) filing and request for schedule I or II controlled substances. | DEA Drug & Chemical Evaluation Section. |
| 1304.04(d) | ARCOS separate central reporting identifier request | DEA ARCOS Unit. |
| 1304.31(a) | Manufacturers importing narcotic raw material report submission | DEA Drug & Chemical Evaluation Section. |
| 1304.32(a) | Manufacturers importing coca leaves report submission | DEA Drug & Chemical Evaluation Section. |
| 1304.33(a) | Reports to ARCOS | DEA ARCOS Unit. |
| 1307.03 | Exception request filing | DEA Office of Diversion Control. |
| 1307.22 | Disposal of controlled substances by the Administration delivery application | DEA Office of Diversion Control. |
| 1308.21(a) | Exclusion of nonnarcotic substance | DEA Office of Diversion Control. |
| 1308.23(b) | Exemption for chemical preparations | DEA Office of Diversion Control. |
| 1308.24(d) | Exempt narcotic chemical preparations importer/exporter reporting | DEA Drug & Chemical Evaluation Section. |
| 1308.24(i) | Exempted chemical preparations listing | DEA Drug & Chemical Evaluation Section. |
| 1308.25(a) | Exclusion of veterinary anabolic steroid implant product application | DEA Office of Diversion Control. |
| 1308.26(a) | Excluded veterinary anabolic steroid implant products listing | DEA Drug & Chemical Evaluation Section. |
| 1308.31(a) | Exemption of a nonnarcotic prescription product application | DEA Office of Diversion Control. |
| 1308.32 | Exempted prescription products listing | DEA Drug & Chemical Evaluation Section. |
| 1308.33(b) | Exemption of certain anabolic steroid products application | DEA Office of Diversion Control. |
| 1308.34 | Exempted anabolic steroid products listing | DEA Drug & Chemical Evaluation Section. |
| 1308.43(b) | Petition to initiate proceedings for rulemaking | DEA Administrator. |
| 1309.03 | List I chemicals registration procedures information request | DEA Registration Section. |
| 1309.32(c) | Request DEA Form 510 | DEA Registration Section. |
| 1309.33(a) | List I chemicals registration application submission | DEA Registration Section. |
| 1309.61 | List I chemicals registration modification request | DEA Registration Section. |
| 1309.71(c) | List I chemicals security system compliance review | DEA Regulatory Section. |
| 1310.05(c) | Importer/exporter of tableting or encapsulation machines reporting | DEA Import/Export Unit. |
| 1310.05(d) | Bulk manufacturer of listed chemicals reporting | DEA Drug & Chemical Evaluation Section. |
| 1310.05(e)(1) | Reporting by persons required to keep records and file reports regarding List I chemicals. | DEA Import/Export Unit. |
| 1310.05(e)(2) | Request to submit List I chemicals reports in electronic form | DEA Import/Export Unit. |
| 1310.06(g) | Report of declared exports of machines refused, rejected, or returned | DEA Import/Export Unit. |
| 1310.13(b) | Exemption for chemical preparations | DEA Office of Diversion Control. |
| 1310.21(b) | Sale by Federal departments or agencies of chemicals which could be used to manufacture controlled substances certification request. | DEA Office of Diversion Control. |
| 1312.12(a) | Application for import permit (DEA Form 357) | DEA Import/Export Unit. |
| 1312.16(b) | Return unused import permits | DEA Import/Export Unit. |
| 1312.18(b) | Import declaration (DEA Form 236) submission | DEA Import/Export Unit. |
| 1312.19(b) | DEA Form 236 copy 4 | DEA Import/Export Unit. |
| 1312.22(a) | Application for export permit (DEA Form 161) | DEA Import/Export Unit. |
| 1312.22(d)(8) | Request for return of unacceptable or undeliverable exported controlled substances.. | DEA Import/Export Unit |
| 1312.24(a) | DEA Form 161 copy 2 | DEA Import/Export Unit. |

TABLE 1—MAILING ADDRESSES REFERENCED IN THE CFR—Continued

| CFR Section | Subject | DEA Office |
|---|---|---|
| 1312.27(a) | Special controlled substances export invoice (DEA Form 236) filing | DEA Import/Export Unit. |
| 1312.27(b)(5)(iv) | Request for reexport | DEA Import/Export Unit. |
| 1312.28(d) | Distribution of special controlled substances invoice (DEA Form 236) copy 4 | DEA Import/Export Unit. |
| 1312.31(b) | Controlled substances transshipment permit application | DEA Import/Export Unit. |
| 1312.32(a) | Advanced notice of importation for transshipment or transfer of controlled substances. | DEA Import/Export Unit. |
| 1313.12(b) | Authorization to import listed chemicals (DEA Form 486) | DEA Import/Export Unit. |
| 1313.12(e) | Quarterly reports for listed chemicals importation | DEA Import/Export Unit. |
| 1313.21(b) | Authorization to export listed chemicals (DEA Form 486) | DEA Import/Export Unit. |
| 1313.21(e) | Quarterly reports for listed chemicals exportation | DEA Import/Export Unit. |
| 1313.22(e) | Written notice of declared exports of listed chemicals refused, rejected or undeliverable. | DEA Import/Export Unit. |
| 1313.31(b) | Advanced notice of importation for transshipment or transfer of listed chemicals. | DEA Import/Export Unit. |
| 1313.32(b)(1) | International transaction authorization (DEA Form 486) | DEA Import/Export Unit. |
| 1314.110(a)(1) | Reports for mail-order sales | DEA Import/Export Unit. |
| 1314.110(a)(2) | Request to submit mail-order sales reports in electronic form | DEA Import/Export Unit. |
| 1315.22 | Application for individual manufacturing quota for ephedrine, pseudoephedrine, phenylpropanolamine (DEA Form 189) filing and request. | DEA Drug & Chemical Evaluation Section. |
| 1315.32(e) | Application for procurement quota for ephedrine, pseudoephedrine, phenylpropanolamine (DEA Form 250) filing and request. | DEA Drug & Chemical Evaluation Section. |
| 1315.32(g) | Procurement quota adjustment request for ephedrine, pseudoephedrine, phenylpropanolamine. | DEA Drug & Chemical Evaluation Section. |
| 1315.34(d) | Application for import quota for ephedrine, pseudoephedrine, phenylpropanolamine (DEA Form 488) request and filing. | DEA Drug & Chemical Evaluation Section. |
| 1315.36(b) | Request import quota increase for ephedrine, pseudoephedrine, or phenylpropanolamine. | DEA Drug & Chemical Evaluation Section. |
| 1316.23(b) | Petition for grant of confidentiality for research subjects | DEA Administrator. |
| 1316.24(b) | Petition for exemption from prosecution for researchers | DEA Administrator. |
| 1316.45 | Hearings documentation filing | DEA Hearing Clerk. |
| 1316.46(a) | Inspection of record | DEA Hearing Clerk. |
| 1316.47(a) | Request for hearing | DEA Federal Register Representative. |
| 1316.48 | Notice of appearance | DEA Administrator. |

TABLE 2—TABLE OF DEA MAILING ADDRESSES

| Code of Federal Regulations Section—Topic | DEA Mailing address |
|---|---|
| **DEA Administrator** | |
| 1308.43(b)—Petition to initiate proceedings for rulemaking<br>1316.23(b)—Petition for grant of confidentiality for research subjects.<br>1316.24(b)—Petition for exemption from prosecution for researchers.<br>1316.48—Notice of appearance. | Drug Enforcement Administration, Attn: Administrator, 8701 Morrissette Drive, Springfield, VA 22152. |
| **DEA Office of Diversion Control** | |
| 1301.52(c)—Controlled substances registration return for cancellation<br>1307.03—Exception request filing.<br>1307.22—Disposal of controlled substances by the Administration delivery application.<br>1308.21(a)—Exclusion of nonnarcotic substance.<br>1308.23(b)—Exemption for chemical preparations.<br>1308.25(a)—Exclusion of veterinary anabolic steroid implant product application.<br>1308.31(a)—Exemption of a nonnarcotic prescription product application.<br>1308.33(b)—Exemption of certain anabolic steroid products application.<br>1310.13(b)—Exemption for chemical preparations.<br>1310.21(b)—Sale by Federal departments or agencies of chemicals which could be used to manufacture controlled substances certification request. | Drug Enforcement Administration, Attn: Office of Diversion Control/OD, 8701 Morrissette Drive, Springfield, VA 22152. |
| **DEA Regulatory Section** | |
| 1301.71(d)—Security system compliance review for controlled substances<br>1309.71(c)—Security system compliance review for List I chemicals. | Drug Enforcement Administration, Attn: Regulatory Section/ODG, 8701 Morrissette Drive, Springfield, VA 22152. |
| **DEA Import/Export Unit** | |
| 1310.05(c)—Importer/exporter of tableting or encapsulation machines reporting<br>1310.05(e)(1)—Reporting by persons required to keep records and file reports regarding List I chemicals.<br>1310.05(e)(2)—Request to submit List I chemicals reports in electronic form. | Drug Enforcement Administration, Attn: Import/Export Unit/ODGI, 8701 Morrissette Drive, Springfield, VA 22152. |

TABLE 2—TABLE OF DEA MAILING ADDRESSES—Continued

| Code of Federal Regulations Section—Topic | DEA Mailing address |
|---|---|
| 1310.06(g)—Report of declared exports of machines refused, rejected, or returned.<br>1312.12(a)—Application for import permit (DEA Form 357).<br>1312.16(b)—Return unused import permits.<br>1312.18(b)—Import declaration (DEA Form 236) submission.<br>1312.19(b)—DEA Form 236 copy 4 filing.<br>1312.22(a)—Application for export permit (DEA Form 161).<br>1312.22(d)(8)—Request for return of unacceptable or undeliverable exported controlled substances.<br>1312.24(a)—DEA Form 161 copy 2 filing.<br>1312.27(a)—Special controlled substances export invoice (DEA Form 236) filing.<br>1312.27(b)(5)(iv)—Request for reexport.<br>1312.28(d)—Distribution of special controlled substances invoice (DEA Form 236) copy 4.<br>1312.31(b)—Controlled substances transshipment permit application.<br>1312.32(a)—Advanced notice of importation for transshipment or transfer of controlled substances.<br>1313.12(b)—Authorization to import listed chemicals (DEA Form 486).<br>1313.12(e)—Quarterly reports of listed chemicals importation.<br>1313.21(b)—Authorization to export listed chemicals (DEA Form 486).<br>1313.21(e)—Quarterly reports of listed chemicals exportation.<br>1313.22(e)—Written notice of declared exports of listed chemicals refused, rejected or undeliverable.<br>1313.31(b)—Advanced notice of importation for transshipment or transfer of listed chemicals.<br>1313.32(b)(1)—International transaction authorization (DEA Form 486).<br>1314.110(a)(1)—Reports for mail-order sales.<br>1314.110(a)(2)—Request to submit mail-order sales reports in electronic form. | |
| **DEA Drug & Chemical Evaluation Section** | |
| 1303.12(b)—Application for controlled substances procurement quota (DEA Form 250) filing and request.<br>1303.12(d)—Controlled substances quota adjustment request.<br>1303.22—Application for individual manufacturing quota (DEA Form 189) filing and request for schedule I or II controlled substances.<br>1304.31(a)—Manufacturers importing narcotic raw material report submission.<br>1304.32(a)—Manufacturers importing coca leaves report submission.<br>1308.24(d)—Exempt narcotic chemical preparations importer/exporter reporting.<br>1308.24(i)—Exempted chemical preparations listing.<br>1308.26(a)—Excluded veterinary anabolic steroid implant products listing.<br>1308.32—Exempted prescription products listing.<br>1308.34—Exempted anabolic steroid products listing.<br>1310.05(d)—Bulk manufacturer of listed chemicals reporting.<br>1315.22—Application for individual manufacturing quota for ephedrine, pseudoephedrine, phenylpropanolamine (DEA Form 189) filing and request.<br>1315.32(e)—Application for procurement quota for ephedrine, pseudoephedrine, phenylpropanolamine (DEA Form 250) filing and request.<br>1315.32(g)—Procurement quota adjustment request for ephedrine, pseudoephedrine, phenylpropanolamine.<br>1315.34(d)—Application for import quota for ephedrine, pseudoephedrine, phenylpropanolamine (DEA Form 488) request and filing.<br>1315.36(b)—Request import quota increase for ephedrine, pseudoephedrine, or phenylpropanolamine. | Drug Enforcement Administration, Attn: Drug & Chemical Evaluation Section/ODE, 8701 Morrissette Drive, Springfield, VA 22152. |
| **DEA ARCOS Unit** | |
| 1304.04(d)—ARCOS separate central reporting identifier request .....<br>1304.33(a)—Reports to ARCOS. | Drug Enforcement Administration, Attn: ARCOS Unit/ODPT, P.O. Box 2520, Springfield, VA 22152–2520, OR Drug Enforcement Administration, Attn: ARCOS Unit/ODPT, 8701 Morrissette Drive, Springfield, VA 22152. |
| **DEA Registration Section** | |
| 1301.03—Procedures information request (controlled substances registration) .....<br>1301.13(e)(2)—Request DEA Forms 224, 225, and 363.<br>1301.14(a)—Controlled substances registration application submission.<br>1301.18(c)—Research project controlled substance increase request.<br>1301.51—Controlled substances registration modification request.<br>1301.52(b)—Controlled substances registration transfer request.<br>1309.03—List I chemicals registration procedures information request.<br>1309.32(c)—Request DEA Form 510.<br>1309.33(a)—List I chemicals registration application submission. | Drug Enforcement Administration, Attn: Registration Section/ODR P.O. Box 2639, Springfield, VA 22152–2639. |

TABLE 2—TABLE OF DEA MAILING ADDRESSES—Continued

| Code of Federal Regulations Section—Topic | DEA Mailing address |
|---|---|
| 1309.61—List I chemicals registration modification request. | |
| **DEA Hearing Clerk** | |
| 1316.45—Hearings documentation filing<br>1316.46(a)—Inspection of record. | Drug Enforcement Administration, Attn: Hearing Clerk/LJ, 8701 Morrissette Drive, Springfield, VA 22152. |
| **DEA Federal Register Representative** | |
| 1316.47(a)—Request for hearing | Drug Enforcement Administration, Attn: Federal Register Representative/ODL, 8701 Morrissette Drive, Springfield, VA 22152. |

DEA is removing address references for the two information collections specifically listed in the regulations (21 CFR 1310.06(d) and 1313.24(e)), as the information was provided inconsistently. Persons are encouraged to submit comments regarding information collections as each specific collection is renewed. Notices regarding such renewal are published in the **Federal Register,** seek public comment, and provide the address to be used when submitting those comments.

**Technical Corrections**

While preparing this rule, DEA became aware of inaccurate section citations in 21 CFR 1310.05(d) and 21 CFR 1310.06(h)(5). Those paragraphs referenced 21 CFR 1310.01(f)(1)(iv) and 21 CFR 1310.01(f)(1)(v) which had previously been redesignated as 21 CFR 1300.02(b)(28)(i)(D) and 21 CFR 1300.02(b)(28)(i)(E), respectively. DEA is correcting these inaccurate citations in this rule.

**Regulatory Certifications**

*Administrative Procedure Act (5 U.S.C. 553)*

An agency may find good cause to exempt a rule from certain provisions of the Administrative Procedure Act (5 U.S.C. 553), including notice of proposed rulemaking and the opportunity for public comment, if it is determined to be unnecessary, impracticable, or contrary to the public interest. This rule updates existing mailing addresses and consolidates those addresses into a new part in 21 CFR. By consolidating this information, DEA will be able to rapidly respond should mailing addresses change due to facility relocation, special mail handling procedures, or other circumstances. As this Final Rule only updates existing mailing addresses and consolidates those addresses (some of which were outdated), DEA finds it unnecessary and impracticable to permit public notice and comment. Therefore, DEA is publishing this document as a final rule. Further, as the changes of address have occurred and it is administratively burdensome for DEA to continue to support previous mailing addresses, and since a delay in the effective date of this regulation could impede the timely receipt of required reports by DEA from the regulated industry and cause further confusion, DEA finds there is good cause to make this final rule effective immediately upon publication.

*Regulatory Flexibility Act*

The Deputy Administrator hereby certifies that this rulemaking has been drafted in accordance with the Regulatory Flexibility Act (5 U.S.C. 601–612), has reviewed this regulation, and by approving it certifies that this regulation will not have a significant economic impact on a substantial number of small entities. This final rule merely changes DEA mailing addresses, permitting industry to report to DEA in a timely manner.

*Executive Order 12866*

The Deputy Administrator further certifies that this rulemaking has been drafted in accordance with the principles in Executive Order 12866 Section 1(b). DEA has determined that this is not a significant regulatory action. Therefore, this action has not been reviewed by the Office of Management and Budget.

*Executive Order 12988*

This regulation meets the applicable standards set forth in Sections 3(a) and 3(b)(2) of Executive Order 12988 Civil Justice Reform.

*Executive Order 13132*

This rulemaking does not preempt or modify any provision of state law; nor does it impose enforcement responsibilities on any state; nor does it diminish the power of any state to enforce its own laws. Accordingly, this rulemaking does not have federalism implications warranting the application of Executive Order 13132.

*Unfunded Mandates Reform Act of 1995*

This rule will not result in the expenditure by state, local, and tribal governments, in the aggregate, or by the private sector, of $120,000,000 or more (adjusted for inflation) in any one year, and will not significantly or uniquely affect small governments. Therefore, no actions were deemed necessary under the provisions of the Unfunded Mandates Reform Act of 1995.

*Congressional Review Act*

This rule is not a major rule as defined by Section 804 of the Small Business Regulatory Enforcement Fairness Act of 1996 (Congressional Review Act). This rule will not result in an annual effect on the economy of $100,000,000 or more; a major increase in costs or prices; or significant adverse effects on competition, employment, investment, productivity, innovation, or on the ability of United States-based companies to compete with foreign-based companies in domestic and export markets.

**List of Subjects**

*21 CFR Part 1301*

Administrative practice and procedure, Drug traffic control, Security measures.

*21 CFR Part 1303*

Administrative practice and procedure, Drug traffic control.

*21 CFR Part 1304*

Drug traffic control, Reporting and recordkeeping requirements.

*21 CFR Part 1307*

Drug traffic control.

*21 CFR Part 1308*

Administrative practice and procedure, Drug traffic control, Reporting and recordkeeping requirements.

*21 CFR Part 1309*

Administrative practice and procedure, Drug traffic control, Exports, Imports, Security measures.

*21 CFR Part 1310*

Drug traffic control, Exports, Imports, Reporting and recordkeeping requirements.

*21 CFR Part 1312*

Administrative practice and procedure, Drug traffic control, Exports, Imports, Reporting and recordkeeping requirements.

*21 CFR Part 1313*

Administrative practice and procedure, Drug traffic control, Exports, Imports, Reporting and recordkeeping requirements.

*21 CFR Part 1314*

Drug traffic control, Reporting and recordkeeping requirements.

*21 CFR Part 1315*

Administrative practice and procedure, Chemicals, Drug traffic control, Imports, Reporting and recordkeeping requirements.

*21 CFR Part 1316*

Administrative practice and procedure, Authority delegations (Government agencies), Drug traffic control, Research, Seizures and forfeitures.

*21 CFR Part 1321*

Administrative practice and procedure, Drug traffic control, Reporting and recordkeeping requirements.

■ For the reasons set out above, 21 CFR Chapter II is amended as follows:

## PART 1301—REGISTRATION OF MANUFACTURERS, DISTRIBUTORS, AND DISPENSERS OF CONTROLLED SUBSTANCES

■ 1. The authority citation for Part 1301 continues to read as follows:

**Authority:** 21 U.S.C. 821, 822, 823, 824, 831, 871(b), 875, 877, 886a, 951, 952, 953, 956, 957, 958.

■ 2. Section 1301.03 is revised to read as follows:

### § 1301.03 Information; special instructions.

Information regarding procedures under these rules and instructions supplementing these rules will be furnished upon request by writing to the Registration Section, Drug Enforcement Administration. See the Table of DEA Mailing Addresses in § 1321.01 of this chapter for the current mailing address.

■ 3. Section 1301.13 is amended by revising paragraph (e)(2) to read as follows:

### § 1301.13 Application for registration; time for application; expiration date; registration for independent activities; application forms, fees, contents and signature; coincident activities.

* * * * *

(e) * * *

(2) DEA Forms 224, 225, and 363 may be obtained at any area office of the Administration or by writing to the Registration Section, Drug Enforcement Administration. See the Table of DEA Mailing Addresses in § 1321.01 of this chapter for the current mailing address.

* * * * *

■ 4. Section 1301.14 is amended by revising paragraph (a) to read as follows:

### § 1301.14 Filing of application; acceptance for filing; defective applications.

(a) All applications for registration shall be submitted for filing to the Registration Unit, Drug Enforcement Administration. The appropriate registration fee and any required attachments must accompany the application. See the Table of DEA Mailing Addresses in § 1321.01 of this chapter for the current mailing address.

* * * * *

■ 5. Section 1301.18 is amended by revising paragraph (c) to read as follows:

### § 1301.18 Research protocols.

* * * * *

(c) In the event that the registrant desires to increase the quantity of a controlled substance used for an approved research project, he/she shall submit a request to the Registration Unit, Drug Enforcement Administration, by registered mail, return receipt requested. See the Table of DEA Mailing Addresses in § 1321.01 of this chapter for the current mailing address. The request shall contain the following information: DEA registration number; name of the controlled substance or substances and the quantity of each authorized in the approved protocol; and the additional quantity of each desired. Upon return of the receipt, the registrant shall be authorized to purchase the additional quantity of the controlled substance or substances specified in the request. The Administration shall review the letter and forward it to the Food and Drug Administration together with the Administration comments. The Food and Drug Administration shall approve or deny the request as an amendment to the protocol and so notify the registrant. Approval of the letter by the Food and Drug Administration shall authorize the registrant to use the additional quantity of the controlled substance in the research project.

* * * * *

■ 6. Section 1301.51 is revised to read as follows:

### § 1301.51 Modification in registration.

Any registrant may apply to modify his/her registration to authorize the handling of additional controlled substances or to change his/her name or address, by submitting a letter of request to the Registration Unit, Drug Enforcement Administration. See the Table of DEA Mailing Addresses in § 1321.01 of this chapter for the current mailing address. The letter shall contain the registrant's name, address, and registration number as printed on the certificate of registration, and the substances and/or schedules to be added to his/her registration or the new name or address and shall be signed in accordance with § 1301.13(j). If the registrant is seeking to handle additional controlled substances listed in Schedule I for the purpose of research or instructional activities, he/she shall attach three copies of a research protocol describing each research project involving the additional substances, or two copies of a statement describing the nature, extent, and duration of such instructional activities, as appropriate. No fee shall be required to be paid for the modification. The request for modification shall be handled in the same manner as an application for registration. If the modification in registration is approved, the Administrator shall issue a new certificate of registration (DEA Form 223) to the registrant, who shall maintain it with the old certificate of registration until expiration.

■ 7. Section 1301.52 is amended by revising paragraphs (b) and (c) to read as follows:

### § 1301.52 Termination of registration; transfer of registration; distribution upon discontinuance of business.

* * * * *

(b) No registration or any authority conferred thereby shall be assigned or otherwise transferred except upon such conditions as the Administration may specifically designate and then only pursuant to written consent. Any person seeking authority to transfer a

registration shall submit a written request, providing full details regarding the proposed transfer of registration, to the Deputy Assistant Administrator, Office of Diversion Control, Drug Enforcement Administration. See the Table of DEA Mailing Addresses in § 1321.01 of this chapter for the current mailing address.

(c) Any registrant desiring to discontinue business activities altogether or with respect to controlled substances (without transferring such business activities to another person) shall return for cancellation his/her certificate of registration, and any unexecuted order forms in his/her possession, to the Registration Unit, Drug Enforcement Administration. See the Table of DEA Mailing Addresses in § 1321.01 of this chapter for the current mailing address. Any controlled substances in his/her possession may be disposed of in accordance with § 1307.21 of this chapter.

* * * * *

■ 8. Section 1301.71 is amended by revising paragraph (d) to read as follows:

**§ 1301.71 Security requirements generally.**

* * * * *

(d) Any registrant or applicant desiring to determine whether a proposed security system substantially complies with, or is the structural equivalent of, the requirements set forth in §§ 1301.72–1301.76 may submit any plans, blueprints, sketches or other materials regarding the proposed security system either to the Special Agent in Charge in the region in which the system will be used, or to the Regulatory Section, Drug Enforcement Administration. See the Table of DEA Mailing Addresses in § 1321.01 of this chapter for the current mailing address.

* * * * *

## PART 1303—QUOTAS

■ 9. The authority citation for Part 1303 continues to read as follows:

**Authority:** 21 U.S.C. 821, 826, 871(b).

■ 10. Section 1303.12 is amended by revising paragraphs (b) and (d) to read as follows:

**§ 1303.12 Procurement quotas.**

* * * * *

(b) Any person who is registered to manufacture controlled substances listed in any schedule and who desires to use during the next calendar year any basic class of controlled substances listed in Schedule I or II (except raw opium being imported by the registrant pursuant to an import permit) for purposes of manufacturing, shall apply on DEA Form 250 for a procurement quota for such basic class. A separate application must be made for each basic class desired to be procured or used. The applicant shall state whether he intends to manufacture the basic class himself or purchase it from another manufacturer. The applicant shall state separately each purpose for which the basic class is desired, the quantity desired for that purpose during the next calendar year, and the quantities used and estimated to be used, if any, for that purpose during the current and preceding 2 calendar years. If the purpose is to manufacture the basic class into dosage form, the applicant shall state the official name, common or usual name, chemical name, or brand name of that form. If the purpose is to manufacture another substance, the applicant shall state the official name, common or usual name, chemical name, or brand name of the substance, and, if a controlled substance listed in any schedule, the schedule number and Administration Controlled Substances Code Number, as set forth in part 1308 of this chapter, of the substance. If the purpose is to manufacture another basic class of controlled substance listed in Schedule I or II, the applicant shall also state the quantity of the other basic class which the applicant has applied to manufacture pursuant to § 1303.22 and the quantity of the first basic class necessary to manufacture a specified unit of the second basic class. DEA Form 250 shall be filed on or before April 1 of the year preceding the calendar year for which the procurement quota is being applied. Copies of DEA Form 250 may be obtained from, and shall be filed with, the Drug and Chemical Evaluation Section, Drug Enforcement Administration. See the Table of DEA Mailing Addresses in § 1321.01 of this chapter for the current mailing address.

* * * * *

(d) Any person to whom a procurement quota has been issued may at any time request an adjustment in the quota by applying to the Administrator with a statement showing the need for the adjustment. Such application shall be filed with the Drug & Chemical Evaluation Section, Drug Enforcement Administration. See the Table of DEA Mailing Addresses in § 1321.01 of this chapter for the current mailing address. The Administrator shall increase or decrease the procurement quota of such person if and to the extent that he finds, after considering the factors enumerated in paragraph (c) of this section and any occurrences since the issuance of the procurement quota, that the need justifies an adjustment.

* * * * *

■ 11. Section 1303.22 is amended by revising the introductory text to read as follows:

**§ 1303.22 Procedure for applying for individual manufacturing quotas.**

Any person who is registered to manufacture any basic class of controlled substance listed in Schedule I or II and who desires to manufacture a quantity of such class shall apply on DEA Form 189 for a manufacturing quota for such quantity of such class. Copies of DEA Form 189 may be obtained from, and shall be filed (on or before May 1 of the year preceding the calendar year for which the manufacturing quota is being applied) with, the Drug & Chemical Evaluation Section, Drug Enforcement Administration. See the Table of DEA Mailing Addresses in § 1321.01 of this chapter for the current mailing address. A separate application must be made for each basic class desired to be manufactured. The applicant shall state:

* * * * *

## PART 1304—RECORDS AND REPORTS OF REGISTRANTS

■ 12. The authority citation for Part 1304 continues to read as follows:

**Authority:** 21 U.S.C. 821, 827, 831, 871(b), 958(e), 965, unless otherwise noted.

■ 13. Section 1304.04 is amended by revising paragraph (d) to read as follows:

**§ 1304.04 Maintenance of records and inventories.**

* * * * *

(d) ARCOS participants who desire authorization to report from other than their registered locations must obtain a separate central reporting identifier. Request for central reporting identifiers will be submitted to the ARCOS Unit. See the Table of DEA Mailing Addresses in § 1321.01 of this chapter for the current mailing address.

* * * * *

■ 14. Section 1304.31 is amended by revising paragraph (a) to read as follows:

**§ 1304.31 Reports from manufacturers importing narcotic raw material.**

(a) Every manufacturer which imports or manufactures from narcotic raw material (opium, poppy straw, and concentrate of poppy straw) shall submit information which accounts for the importation and for all manufacturing operations performed

between importation and the production in bulk or finished marketable products, standardized in accordance with the U.S. Pharmacopeia, National Formulary or other recognized medical standards. Reports shall be signed by the authorized official and submitted quarterly on company letterhead to the Drug and Chemical Evaluation Section, Drug Enforcement Administration, on or before the 15th day of the month immediately following the period for which it is submitted. See the Table of DEA Mailing Addresses in § 1321.01 of this chapter for the current mailing address.

* * * * *

■ 15. Section 1304.32 is amended by revising paragraph (a) to read as follows:

**§ 1304.32 Reports of manufacturers importing coca leaves.**

(a) Every manufacturer importing or manufacturing from raw coca leaves shall submit information accounting for the importation and for all manufacturing operations performed between the importation and the manufacture of bulk or finished products standardized in accordance with U.S. Pharmacopoeia, National Formulary, or other recognized standards. The reports shall be submitted quarterly on company letterhead to the Drug and Chemical Evaluation Section, Drug Enforcement Administration, on or before the 15th day of the month immediately following the period for which it is submitted. See the Table of DEA Mailing Addresses in § 1321.01 of this chapter for the current mailing address.

* * * * *

■ 16. Section 1304.33 is amended by revising paragraph (a) to read as follows:

**§ 1304.33 Reports to ARCOS.**

(a) *Reports generally.* All reports required by this section shall be filed with the ARCOS Unit on DEA Form 333, or on media which contains the data required by DEA Form 333 and which is acceptable to the ARCOS Unit. See the Table of DEA Mailing Addresses in § 1321.01 of this chapter for the current mailing address.

* * * * *

## PART 1307—MISCELLANEOUS

■ 17. The authority citation for Part 1307 continues to read as follows:

**Authority:** 21 U.S.C. 821, 822(d), 871(b), unless otherwise noted.

■ 18. Section 1307.03 is revised to read as follows:

**§ 1307.03 Exceptions to regulations.**

Any person may apply for an exception to the application of any provision of this chapter by filing a written request with the Office of Diversion Control, Drug Enforcement Administration, stating the reasons for such exception. See the Table of DEA Mailing Addresses in § 1321.01 of this chapter for the current mailing address. The Administrator may grant an exception in his discretion, but in no case shall he/she be required to grant an exception to any person which is otherwise required by law or the regulations cited in this section.

■ 19. Section 1307.22 is revised to read as follows:

**§ 1307.22 Disposal of controlled substances by the Administration.**

Any controlled substance delivered to the Administration under § 1307.21 or forfeited pursuant to section 511 of the Act (21 U.S.C. 881) may be delivered to any department, bureau, or other agency of the United States or of any State upon proper application addressed to the Office of Diversion Control, Drug Enforcement Administration. See the Table of DEA Mailing Addresses in § 1321.01 of this chapter for the current mailing address. The application shall show the name, address, and official title of the person or agency to whom the controlled drugs are to be delivered, including the name and quantity of the substances desired and the purpose for which intended. The delivery of such controlled drugs shall be ordered by the Administrator, if, in his opinion, there exists a medical or scientific need therefor.

## PART 1308—SCHEDULES OF CONTROLLED SUBSTANCES

■ 20. The authority citation for part 1308 continues to read as follows:

**Authority:** 21 U.S.C. 811, 812, 871(b), unless otherwise noted.

■ 21. Section 1308.21 is amended by revising paragraph (a) to read as follows:

**§ 1308.21 Application for exclusion of a nonnarcotic substance.**

(a) Any person seeking to have any nonnarcotic drug that may, under the Federal Food, Drug, and Cosmetic Act (21 U.S.C. 301), be lawfully sold over the counter without a prescription, excluded from any schedule, pursuant to section 201(g)(1) of the Act (21 U.S.C. 811(g)(1)), may apply to the Office of Diversion Control, Drug Enforcement Administration. See the Table of DEA Mailing Addresses in § 1321.01 of this chapter for the current mailing address.

* * * * *

■ 22. Section 1308.23 is amended by revising paragraph (b) to read as follows:

**§ 1308.23 Exemption of certain chemical preparations; application.**

* * * * *

(b) Any person seeking to have any preparation or mixture containing a controlled substance and one or more noncontrolled substances exempted from the application of all or any part of the Act, pursuant to paragraph (a) of this section, may apply to the Office of Diversion Control, Drug Enforcement Administration. See the Table of DEA Mailing Addresses in § 1321.01 of this chapter for the current mailing address.

* * * * *

■ 23. Section 1308.24 is amended by revising paragraphs (d) and (i) to read as follows:

**§ 1308.24 Exempt chemical preparations.**

* * * * *

(d) *Records and reports:* Any person who manufactures an exempt chemical preparation or mixture must keep complete and accurate records and file all reports required under part 1304 of this chapter regarding all controlled substances being used in the manufacturing process until the preparation or mixture is in the form described in paragraph (i) of this section. In lieu of records and reports required under part 1304 of this chapter regarding exempt chemical preparations, the manufacturer need only record the name, address, and registration number, if any, of each person to whom the manufacturer distributes any exempt chemical preparation. Each importer or exporter of an exempt narcotic chemical preparation must submit a semiannual report of the total quantity of each substance imported or exported in each calendar half-year within 30 days of the close of the period to the Drug and Chemical Evaluation Section, Drug Enforcement Administration. See the Table of DEA Mailing Addresses in § 1321.01 of this chapter for the current mailing address. Any other person who handles an exempt chemical preparation after it is in the form described in paragraph (i) of this section is not required to maintain records or file reports.

* * * * *

(i) A listing of exempt chemical preparations may be obtained by submitting a written request to the Drug and Chemical Evaluation Section, Drug Enforcement Administration. See the Table of DEA Mailing Addresses in

§ 1321.01 of this chapter for the current mailing address.

* * * * *

■ 24. Section 1308.25 is amended by revising paragraph (a) to read as follows:

**§ 1308.25 Exclusion of a veterinary anabolic steroid implant product; application.**

(a) Any person seeking to have any anabolic steroid product, which is expressly intended for administration through implants to cattle or other nonhuman species and which has been approved by the Secretary of Health and Human Services for such administration, identified as being excluded from any schedule, pursuant to section 102(41)(B)(i) of the Act (21 U.S.C. 802(41)(B)(i)), may apply to the Office of Diversion Control, Drug Enforcement Administration. See the Table of DEA Mailing Addresses in § 1321.01 of this chapter for the current mailing address.

* * * * *

■ 25. Section 1308.26 is amended by revising paragraph (a) to read as follows:

**§ 1308.26 Excluded veterinary anabolic steroid implant products.**

(a) Products containing an anabolic steroid, that are expressly intended for administration through implants to cattle or other nonhuman species and which have been approved by the Secretary of Health and Human Services for such administration are excluded from all schedules pursuant to section 102(41)(B)(i) of the Act (21 U.S.C. 802(41)(B)(i)). A listing of the excluded products may be obtained by submitting a written request to the Drug and Chemical Evaluation Section, Drug Enforcement Administration. See the Table of DEA Mailing Addresses in § 1321.01 of this chapter for the current mailing address.

* * * * *

■ 26. Section 1308.31 is amended by revising paragraph (a) to read as follows:

**§ 1308.31 Application for exemption of a nonnarcotic prescription product.**

(a) Any person seeking to have any compound, mixture, or preparation containing any nonnarcotic controlled substance listed in § 1308.12(e), or in § 1308.13(b) or (c), or in § 1308.14, or in § 1308.15, exempted from application of all or any part of the Act pursuant to section 201(g)(3)(A), of the Act (21 U.S.C. 811(g)(3)(A)) may apply to the Office of Diversion Control, Drug Enforcement Administration. See the Table of DEA Mailing Addresses in § 1321.01 of this chapter for the current mailing address.

* * * * *

■ 27. Section 1308.32 is revised to read as follows:

**§ 1308.32 Exempted prescription products.**

The compounds, mixtures, or preparations that contain a nonnarcotic controlled substance listed in § 1308.12(e) or in § 1308.13(b) or (c) or in § 1308.14 or in § 1308.15 listed in the Table of Exempted Prescription Products have been exempted by the Administrator from the application of sections 302 through 305, 307 through 309, and 1002 through 1004 of the Act (21 U.S.C. 822–825, 827–829, and 952–954) and §§ 1301.13, 1301.22, and §§ 1301.71 through 1301.76 of this chapter for administrative purposes only. An exception to the above is that those products containing butalbital shall not be exempt from the requirement of 21 U.S.C. 952–954 concerning importation, exportation, transshipment and in-transit shipment of controlled substances. Any deviation from the quantitative composition of any of the listed drugs shall require a petition of exemption in order for the product to be exempted. A listing of the Exempted Prescription Products may be obtained by submitting a written request to the Drug and Chemical Evaluation Section, Drug Enforcement Administration. See the Table of DEA Mailing Addresses in § 1321.01 of this chapter for the current mailing address.

■ 28. Section 1308.33 is amended by revising paragraph (b) to read as follows:

**§ 1308.33 Exemption of certain anabolic steroid products; application.**

* * * * *

(b) Any person seeking to have any compound, mixture, or preparation containing an anabolic steroid as defined in part 1300 of this chapter exempted from the application of all or any part of the Act, pursuant to paragraph (a) of this section, may apply to the Office of Diversion Control, Drug Enforcement Administration. See the Table of DEA Mailing Addresses in § 1321.01 of this chapter for the current mailing address.

* * * * *

■ 29. Section 1308.34 is revised to read as follows:

**§ 1308.34 Exempt anabolic steroid products.**

The list of compounds, mixtures, or preparations that contain an anabolic steroid that have been exempted by the Administrator from application of sections 302 through 309 and 1002 through 1004 of the Act (21 U.S.C. 822–829 and 952–954) and §§ 1301.13, 1301.22, and 1301.71 through 1301.76 of this chapter for administrative purposes only may be obtained by submitting a written request to the Drug and Chemical Evaluation Section, Drug Enforcement Administration. See the Table of DEA Mailing Addresses in § 1321.01 of this chapter for the current mailing address.

■ 30. Section 1308.43 is amended by revising paragraph (b) to read as follows:

**§ 1308.43 Initiation of proceedings for rulemaking.**

* * * * *

(b) Petitions shall be submitted in quintuplicate to the Administrator. See the Table of DEA Mailing Addresses in § 1321.01 of this chapter for the current mailing address. Petitions shall be in the following form:

_____ (Date)

Administrator, Drug Enforcement Administration _____ (Mailing Address)

Dear Sir: The undersigned _____ hereby petitions the Administrator to initiate proceedings for the issuance (amendment or repeal) of a rule or regulation pursuant to section 201 of the Controlled Substances Act.

Attached hereto and constituting a part of this petition are the following:

(A) The proposed rule in the form proposed by the petitioner. (If the petitioner seeks the amendment or repeal of an existing rule, the existing rule, together with a reference to the section in the Code of Federal Regulations where it appears, should be included.)

(B) A statement of the grounds which the petitioner relies for the issuance (amendment or repeal) of the rule. (Such grounds shall include a reasonably concise statement of the facts relied upon by the petitioner, including a summary of any relevant medical or scientific evidence known to the petitioner.)

All notices to be sent regarding this petition should be addressed to:

_____ (Name)

_____ (Street Address)

_____ (City and State)

Respectfully yours,

_____ (Signature of petitioner)

* * * * *

## PART 1309—REGISTRATION OF MANUFACTURERS, DISTRIBUTORS, IMPORTERS, AND EXPORTERS OF LIST I CHEMICALS

■ 31. The authority citation for Part 1309 continues to read as follows:

**Authority:** 21 U.S.C. 821, 822, 823, 824, 830, 871(b), 875, 877, 886a, 958.

■ 32. Section 1309.03 is revised to read as follows:

### § 1309.03 Information; special instructions.

Information regarding procedures under these rules and instructions supplementing these rules will be furnished upon request by writing to the Registration Section, Drug Enforcement Administration. See the Table of DEA Mailing Addresses in § 1321.01 of this chapter for the current mailing address.

■ 33. Section 1309.32 is amended by revising paragraph (c) to read as follows:

### § 1309.32 Application forms; contents; signature.

* * * * *

(c) DEA Form 510 may be obtained at any divisional office of the Administration or by writing to the Registration Section, Drug Enforcement Administration. See the Table of DEA Mailing Addresses in § 1321.01 of this chapter for the current mailing address. DEA Form 510a will be mailed to each List I chemical registrant approximately 60 days before the expiration date of his or her registration; if any registered person does not receive such forms within 45 days before the expiration date of the registration, notice must be promptly given of such fact and DEA Form 510a must be requested by writing to the Registration Section of the Administration at the foregoing address.

* * * * *

■ 34. Section 1309.33 is amended by revising paragraph (a) to read as follows:

### § 1309.33 Filing of application; joint filings.

(a) All applications for registration shall be submitted for filing to the Registration Section, Drug Enforcement Administration. See the Table of DEA Mailing Addresses in § 1321.01 of this chapter for the current mailing address. The appropriate registration fee and any required attachments must accompany the application.

* * * * *

■ 35. Section 1309.61 is revised to read as follows:

### § 1309.61 Modification in registration.

Any registrant may apply to modify his or her registration to authorize the handling of additional List I chemicals or to change his or her name or address, by submitting a letter of request to the Registration Section, Drug Enforcement Administration. See the Table of DEA Mailing Addresses in § 1321.01 of this chapter for the current mailing address. The letter shall contain the registrant's name, address, and registration number as printed on the certificate of registration, and the List I chemicals to be added to his registration or the new name or address and shall be signed in accordance with § 1309.32(g). No fee shall be required to be paid for the modification. The request for modification shall be handled in the same manner as an application for registration. If the modification in registration is approved, the Administrator shall issue a new certificate of registration (DEA Form 511) to the registrant, who shall maintain it with the old certificate of registration until expiration.

■ 36. Section 1309.71 is amended by revising paragraph (c) as follows:

### § 1309.71 General security requirements.

* * * * *

(c) Any registrant or applicant desiring to determine whether a proposed system of security controls and procedures is adequate may submit materials and plans regarding the proposed security controls and procedures either to the Special Agent in Charge in the region in which the security controls and procedures will be used, or to the Regulatory Section, Drug Enforcement Administration. See the Table of DEA Mailing Addresses in § 1321.01 of this chapter for the current mailing address.

## PART 1310—RECORDS AND REPORTS OF LISTED CHEMICALS AND CERTAIN MACHINES

■ 37. The authority citation for Part 1310 continues to read as follows:

**Authority:** 21 U.S.C. 802, 827(h), 830, 871(b), 890.

■ 38. Section 1310.05 is amended by revising paragraphs (c), (d), (e)(1), and (e)(2) to read as follows:

### § 1310.05 Reports.

* * * * *

(c) Each regulated person who imports or exports a tableting machine, or encapsulation machine, shall file a report (not a 486) of such importation or exportation with the Import/Export Unit, Drug Enforcement Administration, on or before the date of importation or exportation. See the Table of DEA Mailing Addresses in § 1321.01 of this chapter for the current mailing address. In order to facilitate the importation or exportation of any tableting machine or encapsulating machine and implement the purpose of the Act, regulated persons may wish to report to the Administration as far in advance as possible. A copy of the report may be transmitted directly to the Drug Enforcement Administration through electronic facsimile media. Any tableting machine or encapsulating machine may be imported or exported if that machine is needed for medical, commercial, scientific, or other legitimate uses. However, an importation or exportation of a tableting machine or encapsulating machine may not be completed with a person whose description or identifying characteristic has previously been furnished to the regulated person by the Administration unless the transaction is approved by the Administration.

(d) Each regulated bulk manufacturer of a listed chemical shall submit manufacturing, inventory and use data on an annual basis as set forth in § 1310.06(h). This data shall be submitted annually to the Drug and Chemical Evaluation Section, Drug Enforcement Administration, on or before the 15th day of March of the year immediately following the calendar year for which submitted. See the Table of DEA Mailing Addresses in § 1321.01 of this chapter for the current mailing address. A business entity which manufactures a listed chemical may elect to report separately by individual location or report as an aggregate amount for the entire business entity provided that they inform the DEA of which method they will use. This reporting requirement does not apply to drug or other products which are exempted under §§ 1300.02(b)(28)(i)(D) or 1300.02(b)(28)(i)(E) except as set forth in § 1310.06(h)(5). Bulk manufacturers that produce a listed chemical solely for internal consumption shall not be required to report for that listed chemical. For purposes of these reporting requirements, internal consumption shall consist of any quantity of a listed chemical otherwise not available for further resale or distribution. Internal consumption shall include (but not be limited to) quantities used for quality control testing, quantities consumed in-house or production losses. Internal consumption does not include the quantities of a listed chemical consumed in the production of exempted products. If an existing standard industry report contains the information required in § 1310.06(h) and such information is

separate or readily retrievable from the report, that report may be submitted in satisfaction of this requirement. Each report shall be submitted to the DEA under company letterhead and signed by an appropriate, responsible official. For purposes of this paragraph only, the term regulated bulk manufacturer of a listed chemical means a person who manufactures a listed chemical by means of chemical synthesis or by extraction from other substances. The term bulk manufacturer does not include persons whose sole activity consists of the repackaging or relabeling of listed chemical products or the manufacture of drug dosage form products which contain a listed chemical.

(e) * * *

(1) Submit a written report, containing the information set forth in § 1310.06(i) of this part, on or before the 15th day of each month following the month in which the distributions took place. The report shall be submitted under company letterhead, signed by the person authorized to sign the registration application forms on behalf of the registrant, to the Import/Export Unit, Drug Enforcement Administration (see the Table of DEA Mailing Addresses in § 1321.01 of this chapter for the current mailing address); or

(2) Upon request to and approval by the Administration, submit the report in electronic form, either via computer disk or direct electronic data transmission, in such form as the Administration shall direct. Requests to submit reports in electronic form should be submitted to the Import/Export Unit, Drug Enforcement Administration. See the Table of DEA Mailing Addresses in § 1321.01 of this chapter for the current mailing address.

* * * * *

■ 39. Section 1310.06 is amended by revising paragraphs (d), (g), and (h)(5) to read as follows:

**§ 1310.06 Content of records and reports.**

* * * * *

(d) A suggested format for the reports is provided below:

Supplier:

Registration Number _____
Name _____
Business Address _____
City _____
State _____
Zip _____
Business Phone _____

Purchaser:

Registration Number _____
Name _____
Business Address _____
City _____
State _____
Zip _____
Business Phone _____
Identification _____

Shipping Address (if different than purchaser Address):

Street _____
City _____
State _____
Zip _____
Date of Shipment _____
Name of Listed Chemical(s) _____
Quantity and Form of Packaging _____

Description of Machine:

Make _____
Model _____
Serial # _____
Method of Transfer _____

If Loss or Disappearance:

Date of Loss _____
Type of Loss _____
Description of Circumstances _____

* * * * *

(g) Declared exports of machines which are refused, rejected, or otherwise deemed undeliverable may be returned to the U.S. exporter of record. A brief written report outlining the circumstances must be sent to the Import/Export Unit, Drug Enforcement Administration, following the return within a reasonable time. See the Table of DEA Mailing Addresses in § 1321.01 of this chapter for the current mailing address. This provision does not apply to shipments that have cleared foreign customs, been delivered, and accepted by the foreign consignee. Returns to third parties in the United States will be regarded as imports.

(h) * * *

(5) The aggregate quantity of each listed chemical manufactured which becomes a component of a product exempted from §§ 1300.02(b)(28)(i)(D) or 1300.02(b)(28)(i)(E) during the preceding calendar year.

* * * * *

■ 40. Section 1310.13 is amended by revising paragraph (b) to read as follows:

**§ 1310.13 Exemption of chemical mixtures; application.**

* * * * *

(b) Any manufacturer seeking an exemption for a chemical mixture, not exempt under § 1310.12, from the application of all or any part of the Act, may apply to the Office of Diversion Control, Drug Enforcement Administration. See the Table of DEA Mailing Addresses in § 1321.01 of this chapter for the current mailing address.

* * * * *

■ 41. Section 1310.21 is amended by revising the introductory text of paragraph (b) to read as follows:

**§ 1310.21 Sale by Federal departments or agencies of chemicals which could be used to manufacture controlled substances.**

* * * * *

(b) A Federal department or agency must request certification by submitting a written request to the Administrator, Drug Enforcement Administration. See the Table of DEA Mailing Addresses in § 1321.01 of this chapter for the current mailing address. A request for certification may be transmitted directly to the Office of Diversion Control, Drug Enforcement Administration, through electronic facsimile media. A request for certification must be submitted no later than fifteen calendar days before the proposed sale is to take place. In order to facilitate the sale of chemicals from Federal departments' or agencies' stocks, Federal departments or agencies may wish to submit requests as far in advance of the fifteen calendar days as possible. The written notification of the proposed sale must include:

* * * * *

## PART 1312—IMPORTATION AND EXPORTATION OF CONTROLLED SUBSTANCES

■ 42. The authority citation for Part 1312 continues to read as follows:

**Authority:** 21 U.S.C. 952, 953, 954, 957, 958.

■ 43. Section 1312.12 is amended by revising paragraph (a) to read as follows:

**§ 1312.12 Application for import permit.**

(a) An application for a permit to import controlled substances shall be made on DEA Form 357. DEA Form 357 may be obtained from, and shall be filed with, the Import/Export Unit, Drug Enforcement Administration. See the Table of DEA Mailing Addresses in § 1321.01 of this chapter for the current mailing address. Each application shall show the date of execution; the registration number of the importer; a detailed description of each controlled substance to be imported including the drug name, dosage form, National Drug Code (NDC) number, the Administration Controlled Substance Code Number as set forth in part 1308 of this chapter, the number and size of packages or containers, the name and quantity of the controlled substance contained in any finished dosage units, and the net quantity of any controlled substance (expressed in anhydrous acid, base or alkaloid) given in kilograms or parts

thereof. The application shall also include the following:

* * * * *

■ 44. Section 1312.16 is amended by revising paragraph (b) to read as follows:

**§ 1312.16 Cancellation of permit; expiration date.**

* * * * *

(b) An import permit shall not be valid after the date specified therein, and in no event shall the date be subsequent to 6 months after the date the permit is issued. Any unused import permit shall be returned for cancellation by the registrant to the Import/Export Unit, Drug Enforcement Administration. See the Table of DEA Mailing Addresses in § 1321.01 of this chapter for the current mailing address.

■ 45. Section 1312.18 is amended by revising paragraph (b) to read as follows:

**§ 1312.18 Contents of import declaration.**

* * * * *

(b) Any person registered or authorized to import and desiring to import any non-narcotic controlled substance in Schedules III, IV, or V which is not subject to the requirement of an import permit as described in paragraph (a) of this section, must furnish a controlled substances import declaration on DEA Form 236 to the Import/Export Unit, Drug Enforcement Administration, not later than 15 calendar days prior to the proposed date of importation and distribute four copies of same as hereinafter directed in § 1312.19. See the Table of DEA Mailing Addresses in § 1321.01 of this chapter for the current mailing address.

* * * * *

■ 46. Section 1312.19 is amended by revising paragraph (b) to read as follows:

**§ 1312.19 Distribution of import declaration.**

* * * * *

(b) Copy 4 shall be forwarded, within the time limit required in § 1312.18, directly to the Import/Export Unit, Drug Enforcement Administration. See the Table of DEA Mailing Addresses in § 1321.01 of this chapter for the current mailing address.

* * * * *

■ 47. Section 1312.22 is amended by revising paragraphs (a) and (d)(8) to read as follows:

**§ 1312.22 Application for export permit.**

(a) An application for a permit to export controlled substances shall be made on DEA Form 161, and an application for a permit to reexport controlled substances shall be made on DEA Form 161R. Forms may be obtained from, and shall be filed with, the Import/Export Unit, Drug Enforcement Administration. See the Table of DEA Mailing Addresses in § 1321.01 of this chapter for the current mailing address. Each application shall show the exporter's name, address, and registration number; a detailed description of each controlled substance desired to be exported including the drug name, dosage form, National Drug Code (NDC) number (in accordance with Food and Drug Administration regulations), the Administration Controlled Substance Code Number as set forth in Part 1308 of this chapter, the number and size of packages or containers, the name and quantity of the controlled substance contained in any finished dosage units, and the quantity of any controlled substance (expressed in anhydrous acid, base, or alkaloid) given in kilograms or parts thereof. The application shall include the name, address, and business of the consignee, foreign port of entry, the port of exportation, the approximate date of exportation, the name of the exporting carrier or vessel (if known, or if unknown it should be stated whether shipment will be made by express, freight, or otherwise, exports of controlled substances by mail being prohibited), the date and number, if any, of the supporting foreign import license or permit accompanying the application, and the authority by whom such foreign license or permit was issued. The application shall also contain an affidavit that the packages are labeled in conformance with obligations of the United States under international treaties, conventions, or protocols in effect on May 1, 1971. The affidavit shall further state that to the best of affiant's knowledge and belief, the controlled substances therein are to be applied exclusively to medical or scientific uses within the country to which exported, will not be reexported therefrom and that there is an actual need for the controlled substance for medical or scientific uses within such country, unless the application is submitted for reexport in accordance with paragraphs (c) and (d) of this section. In the case of exportation of crude cocaine, the affidavit may state that to the best of affiant's knowledge and belief, the controlled substances will be processed within the country to which exported, either for medical or scientific use within that country or for reexportation in accordance with the laws of that country to another for medical or scientific use within that country. The application shall be signed and dated by the exporter and shall contain the address from which the substances will be shipped for exportation.

* * * * *

(d) * * *

(8) Shipments that have been exported from the United States and are refused by the consignee in either the first or second country, or are otherwise unacceptable or undeliverable, may be returned to the registered exporter in the United States upon authorization of the Administration. In these circumstances, the exporter in the United States shall file a written request for the return of the controlled substances to the United States with a brief summary of the facts that warrant the return, along with a completed DEA Form 357, Application for Import Permit, with the Import/Export Unit, Drug Enforcement Administration. See the Table of DEA Mailing Addresses in § 1321.01 of this chapter for the current mailing address. The Administration will evaluate the request after considering all the facts as well as the exporter's registration status with the Administration. If the exporter provides sufficient documentation, the Administration will issue an import permit for the return of these drugs, and the exporter can then obtain an export permit from the country of original importation. The substance may be returned to the United States only after affirmative authorization is issued in writing by the Administration.

* * * * *

■ 48. Section 1312.24 is amended by revising paragraph (a) to read as follows:

**§ 1312.24 Distribution of copies of export permit.**

* * * * *

(a) The original, duplicate, and triplicate copies (Copy 1, Copy 2, and Copy 3) shall be transmitted by the Administration to the exporter who will retain the triplicate copy (Copy 3) as his record of authority for the exportation. The exporter shall present to the District Director of the U.S. Customs Service at the port of export and at the time of shipment, the original and duplicate copies (Copy 1 and Copy 2). After endorsing the port of export on the reverse side of the original and duplicate copies (Copy 1 and Copy 2) the District Director shall forward the endorsed original copy (Copy 1) with the shipment, and return the endorsed duplicate copy (Copy 2) to the Import/Export Unit, Drug Enforcement Administration. See the Table of DEA Mailing Addresses in § 1321.01 of this chapter for the current mailing address.

* * * * *

■ 49. Section 1312.27 is amended by revising paragraphs (a) and (b)(5)(iv) to read as follows:

**§ 1312.27 Contents of special controlled substances invoice.**

(a) A person registered or authorized to export any non-narcotic controlled substance listed in Schedule III, IV, or V, which is not subject to the requirement of an export permit pursuant to § 1312.23 (b) or (c), or any person registered or authorized to export any controlled substance in Schedule V, must furnish a special controlled substances export invoice on DEA Form 236 to the Import/Export Unit, Drug Enforcement Administration, not less than 15 calendar days prior to the proposed date of exportation, and distribute four copies of same as hereinafter directed in § 1312.28 of this part. See the Table of DEA Mailing Addresses in § 1321.01 of this chapter for the current mailing address.

(b) * * *

(5) * * *

(iv) Shipments which have been exported from the United States and are refused by the consignee in the country of destination, or are otherwise unacceptable or undeliverable, may be returned to the registered exporter in the United States upon authorization of the Drug Enforcement Administration. In this circumstance, the exporter in the United States shall file a written request for reexport, along with a completed DEA Form 236, Import Declaration with the Import/Export Unit, Drug Enforcement Administration. See the Table of DEA Mailing Addresses in § 1321.01 of this chapter for the current mailing address. A brief summary of the facts that warrant the return of the substance to the United States along with an authorization from the country of export will be included with the request. DEA will evaluate the request after considering all the facts as well as the exporter's registration status with DEA. The substance may be returned to the United States only after affirmative authorization is issued in writing by DEA.

* * * * *

■ 50. Section 1312.28 is amended by revising paragraph (d) to read as follows:

**§ 1312.28 Distribution of special controlled substances invoice.**

* * * * *

(d) Copy 4 shall be forwarded, within the time limit required in § 1312.27 of this part, directly to the Import/Export Unit, Drug Enforcement Administration. The documentation required by § 1312.27(b)(4) of this part must be attached to this copy. See the Table of DEA Mailing Addresses in § 1321.01 of this chapter for the current mailing address.

* * * * *

■ 51. Section 1312.31 is amended by revising the introductory text of paragraph (b) to read as follows:

**§ 1312.31 Schedule I: Application for prior written approval.**

* * * * *

(b) An application for a transshipment permit must be submitted to the Import/Export Unit, Drug Enforcement Administration, at least 30 days, or in the case of an emergency as soon as practicable, prior to the expected date of importation, transfer or transshipment. See the Table of DEA Mailing Addresses in § 1321.01 of this chapter for the current mailing address. Each application shall contain the following:

* * * * *

■ 52. Section 1312.32 is amended by revising paragraph (a) to read as follows:

**§ 1312.32 Schedules II, III, IV: Advance notice.**

(a) A controlled substance listed in Schedules II, III, or IV may be imported into the United States for transshipment, or may be transferred or transshipped within the United States for immediate exportation, provided that written notice is submitted to the Import/Export Unit, Drug Enforcement Administration, at least 15 days prior to the expected date of importation, transfer or transshipment. See the Table of DEA Mailing Addresses in § 1321.01 of this chapter for the current mailing address.

* * * * *

## PART 1313—IMPORTATION AND EXPORTATION OF LIST I AND LIST II CHEMICALS

■ 53. The authority citation for part 1313 continues to read as follows:

**Authority:** 21 U.S.C. 802, 830, 871(b), 971.

■ 54. Section 1313.12 is amended by revising paragraph (b) and the introductory text of paragraph (e) to read as follows:

**§ 1313.12 Requirement of authorization to import.**

* * * * *

(b) A completed DEA Form 486 must be received by the Import/Export Unit, Drug Enforcement Administration, not later than 15 days prior to the importation. See the Table of DEA Mailing Addresses in § 1321.01 of this chapter for the current mailing address. A copy of the completed DEA Form 486 may be transmitted directly to the Drug Enforcement Administration through electronic facsimile media not later than 15 days prior to the importation.

* * * * *

(e) For importations where advance notification is waived pursuant to paragraph (c)(2) of this section no DEA Form 486 is required; however, the regulated person shall submit quarterly reports to the Import/Export Unit, Drug Enforcement Administration, no later than the 15th day of the month following the end of each quarter. See the Table of DEA Mailing Addresses in § 1321.01 of this chapter for the current mailing address. The report shall contain the following information regarding each individual importation:

* * * * *

■ 55. Section 1313.21 is amended by revising paragraph (b) and the introductory text of paragraph (e) to read as follows:

**§ 1313.21 Requirement of authorization to export.**

* * * * *

(b) A completed DEA Form 486 must be received by the Import/Export Unit, Drug Enforcement Administration, not later than 15 days prior to the exportation. See the Table of DEA Mailing Addresses in § 1321.01 of this chapter for the current mailing address. A copy of the completed DEA Form 486 may be transmitted directly to the Drug Enforcement Administration through electronic facsimile media not later than 15 days prior to the exportation.

* * * * *

(e) For exportations where advance notification is waived pursuant to paragraph (c)(2) of this section, no DEA Form 486 is required; however, the regulated person shall file quarterly reports with the Import/Export Unit, Drug Enforcement Administration, no later than the 15th day of the month following the end of each quarter. See the Table of DEA Mailing Addresses in § 1321.01 of this chapter for the current mailing address. The report shall contain the following information regarding each individual exportation:

* * * * *

■ 56. Section 1313.22 is amended by revising paragraph (e) to read as follows:

**§ 1313.22 Contents of export declaration.**

* * * * *

(e) Declared exports of listed chemicals which are refused, rejected, or otherwise deemed undeliverable may be returned to the U.S. chemical exporter of record. A brief written notification (this does not require a DEA Form 486) outlining the circumstances

must be sent to the Import/Export Unit, Drug Enforcement Administration, following the return within a reasonable time. See the Table of DEA Mailing Addresses in § 1321.01 of this chapter for the current mailing address. This provision does not apply to shipments that have cleared foreign customs, been delivered, and accepted by the foreign consignee. Returns to third parties in the United States will be regarded as imports.

■ 57. Section 1313.24 is amended by revising paragraph (e) to read as follows:

**§ 1313.24 Waiver of 15-day advance notice for chemical exporters.**

* * * * *

(e) The Administrator may notify any chemical exporter that a regular customer has been disqualified or that a new customer for whom a notification has been submitted is not to be accorded the status of a regular customer. In the event of a disqualification of an established regular customer, the chemical exporter will be notified in writing of the reasons for such action.

■ 58. Section 1313.31 is amended by revising the introductory text of paragraph (b) to read as follows:

**§ 1313.31 Advance notice of importation for transshipment or transfer.**

* * * * *

(b) Advance notification must be provided to the Import/Export Unit, Drug Enforcement Administration, not later than 15 days prior to the proposed date the listed chemical will transship or transfer through the United States. See the Table of DEA Mailing Addresses in § 1321.01 of this chapter for the current mailing address. The written notification (not a DEA Form 486) shall contain the following information:

* * * * *

■ 59. Section 1313.32 is amended by revising paragraph (b)(1) to read as follows:

**§ 1313.32 Requirement of authorization for international transactions**

* * * * *

(b)(1) A completed DEA Form 486 must be received by the Import/Export Unit, Drug Enforcement Administration, not later than 15 days prior to the international transaction. See the Table of DEA Mailing Addresses in § 1321.01 of this chapter for the current mailing address.

* * * * *

## PART 1314—RETAIL SALE OF SCHEDULED LISTED CHEMICAL PRODUCTS

■ 60. The authority citation for part 1314 continues to read as follows:

**Authority:** 21 U.S.C. 802, 830, 842, 871(b), 875, 877.

■ 61. Section 1314.110 is amended by revising paragraphs (a)(1) and (a)(2) to read as follows:

**§ 1314.110 Reports for mail-order sales.**

(a) * * *

(1) Submit a written report, containing the information set forth in paragraph (b) of this section, on or before the 15th day of each month following the month in which the distributions took place. The report must be submitted under company letterhead, signed by the person authorized to sign on behalf of the regulated seller, to the Import/Export Unit, Drug Enforcement Administration (see the Table of DEA Mailing Addresses in § 1321.01 of this chapter for the current mailing address); or

(2) Upon request to and approval by the Administration, submit the report in electronic form, either via computer disk or direct electronic data transmission, in such form as the Administration shall direct. Requests to submit reports in electronic form should be submitted to the Import/Export Unit, Drug Enforcement Administration. See the Table of DEA Mailing Addresses in § 1321.01 of this chapter for the current mailing address.

* * * * *

## PART 1315—IMPORTATION AND PRODUCTION QUOTAS FOR EPHEDRINE, PSEUDOEPHEDRINE, AND PHENYLPROPANOLAMINE

■ 62. The authority citation for part 1315 continues to read as follows:

**Authority:** 21 U.S.C. 802, 821, 826, 871(b), 952.

■ 63. Section 1315.22 is amended by revising the introductory text to read as follows:

**§ 1315.22 Procedure for applying for individual manufacturing quotas.**

Any person who is registered to manufacture ephedrine, pseudoephedrine, or phenylpropanolamine and who desires to manufacture a quantity of the chemical must apply on DEA Form 189 for a manufacturing quota for the quantity of the chemical. Copies of DEA Form 189 may be obtained from the Office of Diversion Control Web site, and must be filed (on or before April 1 of the year preceding the calendar year for which the manufacturing quota is being applied) with the Drug & Chemical Evaluation Section, Drug Enforcement Administration. See the Table of DEA Mailing Addresses in § 1321.01 of this chapter for the current mailing address. A separate application must be made for each chemical desired to be manufactured. The applicant must state the following:

* * * * *

■ 64. Section 1315.32 is amended by revising paragraphs (e) and (g) to read as follows:

**§ 1315.32 Obtaining a procurement quota.**

* * * * *

(e) DEA Form 250 must be filed on or before April 1 of the year preceding the calendar year for which the procurement quota is being applied. Copies of DEA Form 250 may be obtained from the Office of Diversion Control Web site, and must be filed with the Drug & Chemical Evaluation Section, Drug Enforcement Administration. See the Table of DEA Mailing Addresses in § 1321.01 of this chapter for the current mailing address.

* * * * *

(g) Any person to whom a procurement quota has been issued may at any time request an adjustment in the quota by applying to the Administrator with a statement showing the need for the adjustment. The application must be filed with the Drug & Chemical Evaluation Section, Drug Enforcement Administration. See the Table of DEA Mailing Addresses in § 1321.01 of this chapter for the current mailing address. The Administrator shall increase or decrease the procurement quota of the person if and to the extent that he finds, after considering the factors enumerated in paragraph (f) of this section and any occurrences since the issuance of the procurement quota, that the need justifies an adjustment.

* * * * *

■ 65. Section 1315.34 is amended by revising paragraph (d) to read as follows:

**§ 1315.34 Obtaining an import quota.**

* * * * *

(d) DEA Form 488 must be filed on or before April 1 of the year preceding the calendar year for which the import quota is being applied. Copies of DEA Form 488 may be obtained from the Office of Diversion Control Web site, and must be filed with the Drug & Chemical Evaluation Section. See the Table of DEA Mailing Addresses in

§ 1321.01 of this chapter for the current mailing address.

* * * * *

■ 66. Section 1315.36 is amended by revising paragraph (b) to read as follows:

**§ 1315.36 Amending an import quota.**

* * * * *

(b) Any person to whom an import quota has been issued may at any time request an increase in the quota quantity by applying to the Administrator with a statement showing the need for the adjustment. The application must be filed with the Drug & Chemical Evaluation Section, Drug Enforcement Administration. See the Table of DEA Mailing Addresses in § 1321.01 of this chapter for the current mailing address. The Administrator may increase the import quota of the person if and to the extent that he determines that the approval is necessary to provide for medical, scientific, or other legitimate purposes regarding the chemical. The Administrator shall specify a period of time for which the approval is in effect or shall provide that the approval is in effect until the Administrator notifies the applicant in writing that the approval is terminated.

* * * * *

## PART 1316—ADMINISTRATIVE FUNCTIONS, PRACTICES, AND PROCEDURES

■ 67. The authority citation for Subpart B of part 1316 continues to read as follows:

**Authority:** 21 U.S.C. 830, 871(b).

■ 68. Section 1316.23 is amended by revising the introductory text of paragraph (b) to read as follows:

**§ 1316.23 Confidentiality of identity of research subjects.**

* * * * *

(b) All petitions for Grants of Confidentiality shall be addressed to the Administrator, Drug Enforcement Administration (see the Table of DEA Mailing Addresses in § 1321.01 of this chapter for the current mailing address):

* * * * *

■ 69. Section 1316.24 is amended by revising the introductory text of paragraph (b) to read as follows:

**§ 1316.24 Exemption from prosecution for researchers.**

* * * * *

(b) All petitions for Grants of Exemption from Prosecution for the Researcher shall be addressed to the Administrator, Drug Enforcement Administration, (see the Table of DEA Mailing Addresses in § 1321.01 of this chapter for the current mailing address) and shall contain the following:

* * * * *

■ 70. The authority citation for Subpart D of part 1316 continues to read as follows:

**Authority:** 21 U.S.C. 811, 812, 871(b), 875, 958(d), 965.

■ 71. Section 1316.45 is revised to read as follows:

**§ 1316.45 Filings; address; hours.**

Documents required or permitted to be filed in, and correspondence relating to, hearings governed by the regulations in this chapter shall be filed with the Hearing Clerk, Drug Enforcement Administration. See the Table of DEA Mailing Addresses in § 1321.01 of this chapter for the current mailing address. This office is open Monday through Friday from 8:30 a.m. to 5 p.m. eastern standard or daylight saving time, whichever is effective in the District of Columbia at the time, except on national legal holidays. Documents shall be dated and deemed filed upon receipt by the Hearing Clerk.

■ 72. Section 1316.46 is amended by revising paragraph (a) to read as follows:

**§ 1316.46 Inspection of record.**

(a) The record bearing on any proceeding, except for material described in subsection (b) of this section, shall be available for inspection and copying by any person entitled to participate in such proceeding, during office hours in the office of the Hearing Clerk, Drug Enforcement Administration. See the Table of DEA Mailing Addresses in § 1321.01 of this chapter for the current mailing address.

* * * * *

■ 73. Section 1316.47 is amended by revising paragraph (a) to read as follows:

**§ 1316.47 Request for hearing.**

(a) Any person entitled to a hearing and desiring a hearing shall, within the period permitted for filing, file a request for a hearing in the following form (see the Table of DEA Mailing Addresses in § 1321.01 of this chapter for the current mailing address):

_____ (Date)

Administrator, Drug Enforcement Administration, Attention: DEA Federal Register Representative.

Dear Sir: The undersigned _____ (Name of person) hereby requests a hearing in the matter of: _____ (Identification of the proceeding).

(A) (State with particularity the interest of the person in the proceeding.)

(B) (State with particularity the objections or issues, if any, concerning which the person desires to be heard.)

(C) (State briefly the position of the person with regard to the particular objections or issues.)

All notices to be sent pursuant to the proceeding should be addressed to:

_____ (Name)

_____ (Street address)

_____ (City and State)

Respectfully yours,

_____ (Signature of person)

* * * * *

■ 74. Section 1316.48 is revised to read as follows:

**§ 1316.48 Notice of appearance.**

Any person entitled to a hearing and desiring to appear in any hearing, shall, if he has not filed a request for hearing, file within the time specified in the notice of proposed rulemaking, a written notice of appearance in the following form (see the Table of DEA Mailing Addresses in § 1321.01 of this chapter for the current mailing address):

_____ (Date)

Administrator, Drug Enforcement Administration

_____ (Mailing Address), Attention: Federal Register Representative

Dear Sir: Please take notice that _____ (Name of person) will appear in the matter of: _____ (Identification of the proceeding).

(A) (State with particularity the interest of the person in the proceeding.)

(B) (State with particularity the objections or issues, if any, concerning which the person desires to be heard.)

(C) (State briefly the position of the person with regard to the particular objections or issues.)

All notices to be sent pursuant to this appearance should be addressed to:

_____ (Name)

_____ (Street address)

_____ (City and State)

Respectfully yours,

_____ (Signature of person)

■ 75. Part 1321 is added to 21 CFR Chapter II to read as follows:

## PART 1321—DEA MAILING ADDRESSES

Sec.
1321.01 DEA mailing addresses.

**Authority:** 21 U.S.C. 871(b).

**§ 1321.01 DEA mailing addresses.**

The following table provides information regarding mailing addresses to be used when sending specified correspondence to the Drug Enforcement Administration.

TABLE OF DEA MAILING ADDRESSES

| Code of Federal Regulations Section—Topic | DEA Mailing address |
|---|---|
| **DEA Administrator** | |
| 1308.43(b)—Petition to initiate proceedings for rulemaking<br>316.23(b)—Petition for grant of confidentiality for research subjects.<br>1316.24(b)—Petition for exemption from prosecution for researchers.<br>1316.48—Notice of appearance. | Drug Enforcement Administration, Attn: Administrator, 8701 Morrissette Drive, Springfield, VA 22152. |
| **DEA Office of Diversion Control** | |
| 1301.52(c)—Controlled substances registration return for cancellation<br>1307.03—Exception request filing.<br>1307.22—Disposal of controlled substances by the Administration delivery application.<br>1308.21(a)—Exclusion of nonnarcotic substance.<br>1308.23(b)—Exemption for chemical preparations.<br>1308.25(a)—Exclusion of veterinary anabolic steroid implant product application.<br>1308.31(a)—Exemption of a nonnarcotic prescription product application.<br>1308.33(b)—Exemption of certain anabolic steroid products application.<br>1310.13(b)—Exemption for chemical preparations.<br>1310.21(b)—Sale by Federal departments or agencies of chemicals which could be used to manufacture controlled substances certification request. | Drug Enforcement Administration, Attn: Office of Diversion Control/OD, 8701 Morrissette Drive, Springfield, VA 22152. |
| **DEA Regulatory Section** | |
| 1301.71(d)—Security system compliance review for controlled substances<br>1309.71(c)—Security system compliance review for List I chemicals. | Drug Enforcement Administration, Attn: Regulatory Section/ODG, 8701 Morrissette Drive, Springfield, VA 22152 |
| **DEA Import/Export Unit** | |
| 1310.05(c)—Importer/exporter of tableting or encapsulation machines reporting<br>1310.05(e)(1)—Reporting by persons required to keep records and file reports regarding List I chemicals.<br>1310.05(e)(2)—Request to submit List I chemicals reports in electronic form.<br>1310.06(g)—Report of declared exports of machines refused, rejected, or returned.<br>1312.12(a)—Application for import permit (DEA Form 357).<br>1312.16(b)—Return unused import permits.<br>1312.18(b)—Import declaration (DEA Form 236) submission.<br>1312.19(b)—DEA Form 236 copy 4 filing.<br>1312.22(a)—Application for export permit (DEA Form 161).<br>1312.22(d)(8)—Request for return of unacceptable or undeliverable exported controlled substances.<br>1312.24(a)—DEA Form 161 copy 2 filing.<br>1312.27(a)—Special controlled substances export invoice (DEA Form 236) filing.<br>1312.27(b)(5)(iv)—Request for reexport.<br>1312.28(d)—Distribution of special controlled substances invoice (DEA Form 236) copy 4.<br>1312.31(b)—Controlled substances transshipment permit application.<br>1312.32(a)—Advanced notice of importation for transshipment or transfer of controlled substances.<br>1313.12(b)—Authorization to import listed chemicals (DEA Form 486).<br>1313.12(e)—Quarterly reports of listed chemicals importation.<br>1313.21(b)—Authorization to export listed chemicals (DEA Form 486).<br>1313.21(e)—Quarterly reports of listed chemicals exportation.<br>1313.22(e)—Written notice of declared exports of listed chemicals refused, rejected or undeliverable.<br>1313.31(b)—Advanced notice of importation for transshipment or transfer of listed chemicals.<br>1313.32(b)(1)—International transaction authorization (DEA Form 486).<br>1314.110(a)(1)—Reports for mail-order sales.<br>1314.110(a)(2)—Request to submit mail-order sales reports in electronic form. | Drug Enforcement Administration, Attn: Import/Export Unit/ODGI, 8701 Morrissette Drive, Springfield, VA 22152. |
| **DEA Drug & Chemical Evaluation Section** | |
| 1303.12(b)—Application for controlled substances procurement quota (DEA Form 250) filing and request.<br>1303.12(d)—Controlled substances quota adjustment request.<br>1303.22—Application for individual manufacturing quota (DEA Form 189) filing and request for schedule I or II controlled substances.<br>1304.31(a)—Manufacturers importing narcotic raw material report submission.<br>1304.32(a)—Manufacturers importing coca leaves report submission. | Drug Enforcement Administration, Attn: Drug & Chemical Evaluation Section/ODE, 8701 Morrissette Drive, Springfield, VA 22152. |

TABLE OF DEA MAILING ADDRESSES—Continued

| Code of Federal Regulations Section—Topic | DEA Mailing address |
|---|---|
| 1308.24(d)—Exempt narcotic chemical preparations importer/exporter reporting.<br>1308.24(i)—Exempted chemical preparations listing.<br>1308.26(a)—Excluded veterinary anabolic steroid implant products listing.<br>1308.32—Exempted prescription products listing.<br>1308.34—Exempted anabolic steroid products listing.<br>1310.05(d)—Bulk manufacturer of listed chemicals reporting.<br>1315.22—Application for individual manufacturing quota for ephedrine, pseudoephedrine, phenylpropanolamine (DEA Form 189) filing and request.<br>1315.32(e)—Application for procurement quota for ephedrine, pseudoephedrine, phenylpropanolamine (DEA Form 250) filing and request.<br>1315.32(g)—Procurement quota adjustment request for ephedrine, pseudoephedrine, phenylpropanolamine.<br>1315.34(d)—Application for import quota for ephedrine, pseudoephedrine, phenylpropanolamine (DEA Form 488) request and filing.<br>1315.36(b)—Request import quota increase for ephedrine, pseudoephedrine, or phenylpropanolamine. | |
| **DEA ARCOS Unit** | |
| 1304.04(d)—ARCOS separate central reporting identifier request<br>1304.33(a)—Reports to ARCOS. | Drug Enforcement Administration, Attn: ARCOS Unit/ODPT, P.O. Box 2520, Springfield, VA 22152–2520, OR Drug Enforcement Administration, Attn: ARCOS Unit, 8701 Morrissette Drive, Springfield, VA 22152. |
| **DEA Registration Section** | |
| 1301.03—Procedures information request (controlled substances registration)<br>1301.13(e)(2)—Request DEA Forms 224, 225, and 363.<br>1301.14(a)—Controlled substances registration application submission.<br>1301.18(c)—Research project controlled substance increase request.<br>1301.51—Controlled substances registration modification request.<br>1301.52(b)—Controlled substances registration transfer request.<br>1309.03—List I chemicals registration procedures information request.<br>1309.32(c)—Request DEA Form 510.<br>1309.33(a)—List I chemicals registration application submission.<br>1309.61—List I chemicals registration modification request. | Drug Enforcement Administration, Attn: Registration Section/ODR P.O. Box 2639, Springfield, VA 22152–2639. |
| **DEA Hearing Clerk** | |
| 1316.45—Hearings documentation filing<br>1316.46(a)—Inspection of record. | Drug Enforcement Administration, Attn: Hearing Clerk/LJ, 8701 Morrissette Drive, Springfield, VA 22152. |
| **DEA Federal Register Representative** | |
| 1316.47(a)—Request for hearing | Drug Enforcement Administration, Attn: Federal Register Representative/ODL, 8701 Morrissette Drive, Springfield, VA 22152. |

Dated: February 25, 2010.

**Michele M. Leonhart,**

*Deputy Administrator.*

[FR Doc. 2010–4714 Filed 3–8–10; 8:45 am]

**BILLING CODE 4410–09–P**

## DEPARTMENT OF HOMELAND SECURITY

## Coast Guard

## 33 CFR Part 165

**[Docket No. USCG–2008–1017]**

**RIN 1625–AA11**

## Regulated Navigation Areas; Bars Along the Coasts of Oregon and Washington; Correction

**AGENCY:** Coast Guard, DHS.

**ACTION:** Correcting amendment.

**SUMMARY:** The Coast Guard published a document in the **Federal Register** on November 17, 2009, adding a section and establishing regulated navigation areas for bars along the coasts of Oregon and Washington. That document inadvertently failed to include an option for mariners to use VHF–FM Channel 16 for notifying the Coast Guard, and also contained typographical errors improperly describing VHF–FM Channel 16 and a position of latitude. This document corrects the final regulations.

**DATES:** Effective March 9, 2010.

**FOR FURTHER INFORMATION CONTACT:** If you have questions about this

correction, call or e-mail LT Matthew N. Jones, Staff Attorney, Thirteenth Coast Guard District; telephone 206–220–7110, e-mail *Matthew.N.Jones@uscg.mil.*

**List of Subjects in 33 CFR Part 165**

Harbors, Marine safety, Navigation (water), Reporting and recordkeeping requirements, Security measures, Waterways.

■ Accordingly, 33 CFR part 165 is amended by making the following correcting amendment:

## PART 165—REGULATED NAVIGATION AREAS AND LIMITED ACCESS AREAS

■ 1. The authority citation for part 165 continues to read as follows:

**Authority:** 33 U.S.C. 1226, 1231; 46 U.S.C. Chapter 701, 3306, 3703; 50 U.S.C. 191, 195; 33 CFR 1.05–1(g), 6.04–1, 6.04–6, and 160.5; Pub. L. 107–295, 116 Stat. 2064; Department of Homeland Security Delegation No. 0170.1.

■ 2. In § 165.1325, revise paragraphs (a)(12) and the first sentence in each of paragraphs (c)(1)(iii), (c)(3)(ii) introductory text, (c)(4)(iii) introductory text, and (c)(5)(ii) introductory text to read as follows:

**§ 165.1325 Regulated Navigation Areas; Bars Along the Coasts of Oregon and Washington.**

(a) * * *

(12) Umpqua River Bar, Oreg.: From a point on the shoreline at 43°41′20″ N., 124°11′58″ W. thence westward to 43°41′20″ N., 124°13′32″ W. thence southward to 43°38′35″ N., 24°14′25″ W. thence eastward to a point on the shoreline at 43°38′35″ N., 124°12′35″ W. thence northward along the shoreline to light "8″ at 43°40′57″ N., 124°11′13″ W. thence southwestward to a point on the west bank of the entrance channel at 43°40′52″ N., 124°11′34″ W. thence southwestward along the west bank of the entrance channel thence northward along the seaward shoreline to the beginning.

* * * * *

(c) * * *

(1) * * *

(iii) The Coast Guard will notify the public of bar restrictions and bar closures via a Broadcast Notice to Mariners on VHF–FM Channel 16 and 22A. * * *

(3) * * *

(ii) The master or operator of any uninspected passenger vessel operating in a regulated navigation area established in paragraph (a) of this section during the conditions described in paragraph (c)(3)(i)(A) of this section shall contact the Coast Guard on VHF–FM Channel 16 or 22A prior to crossing the bar between sunset and sunrise. * * *

(4) * * *

(iii) The master or operator of any small passenger vessel operating in a regulated navigation area established in paragraph (a) of this section during the conditions described in paragraph (c)(4)(i)(A) of this section shall contact the Coast Guard on VHF–FM Channel 16 or 22A prior to crossing the bar between sunset and sunrise. * * *

(5) * * *

(ii) The master or operator of any commercial fishing vessel operating in a regulated navigation area established in paragraph (a) of this section during the conditions described in paragraph (c)(5)(i)(A) of this section shall contact the Coast Guard on VHF–FM Channel 16 or 22A prior to crossing the bar between sunset and sunrise. * * *

* * * * *

Dated: February 17, 2010.

**G.T. Blore,**

*Rear Admiral, U.S. Coast Guard, Commander, Thirteenth Coast Guard District.*

[FR Doc. 2010–4769 Filed 3–8–10; 8:45 am]

BILLING CODE 9110–04–P

## DEPARTMENT OF TRANSPORTATION

### Saint Lawrence Seaway Development Corporation

### 33 CFR Part 401

**[Docket No. SLSDC–2010–0001]**

**RIN 2135–AA30**

### Seaway Regulations and Rules: Periodic Update, Various Categories

**AGENCY:** Saint Lawrence Seaway Development Corporation, DOT.

**ACTION:** Final Rule.

**SUMMARY:** The Saint Lawrence Seaway Development Corporation (SLSDC) and the St. Lawrence Seaway Management Corporation (SLSMC) of Canada, under international agreement, jointly publish and presently administer the St. Lawrence Seaway Regulations and Rules (Practices and Procedures in Canada) in their respective jurisdictions. Under agreement with the SLSMC, the SLSDC is amending the joint regulations by updating the Seaway Regulations and Rules in various categories. The changes will update the following sections of the Regulations and Rules: Condition of Vessels; Radio Communications; and General. These amendments are necessary to take account of updated procedures and will enhance the safety of transits through the Seaway. Several of the proposed amendments are merely editorial or for clarification of existing requirements.

**DATES:** The final rule is effective March 9, 2010.

**FOR FURTHER INFORMATION CONTACT:** Carrie Mann Lavigne, Chief Counsel, Saint Lawrence Seaway Development Corporation, 180 Andrews Street, Massena, New York 13662; 315–64–3200.

**SUPPLEMENTARY INFORMATION:** The Saint Lawrence Seaway Development Corporation (SLSDC) and the St. Lawrence Seaway Management Corporation (SLSMC) of Canada, under international agreement, jointly publish and presently administer the St. Lawrence Seaway Regulations and Rules (Practices and Procedures in Canada) in their respective jurisdictions. Under agreement with the SLSMC, the SLSDC is amending the joint regulations by updating the Regulations and Rules in various categories. The changes will update the following sections of the Regulations and Rules: Condition of Vessels; Radio Communications; and General. These updates are necessary to take account of updated procedures which will enhance the safety of transits through the Seaway. Many of these proposed changes are to clarify existing requirements in the regulations. Where new requirements or regulations are being made, an explanation for such a change is provided below.

The joint regulations are effective in Canada on March 15, 2010. For consistency, because these are under international agreement, joint regulations, and to avoid confusion among users of the Seaway, the SLSDC finds that there is good cause to make the U.S. version of the amendments effective upon publication.

*Regulatory Notices: Privacy Act:* Anyone is able to search the electronic form of all comments received into any of our dockets by the name of the individual submitting the comment (or signing the comment, if submitted on behalf of an association, business, labor union, etc.). You may review DOT's complete Privacy Act Statement in the **Federal Register** published on April 11, 2000 (Volume 65, Number 70; Pages 19477–78) or you may visit *http://www.Regulations.gov.*

The Notice of Proposed Rulemaking was published in the **Federal Register** on January 27, 2010 (75 FR 4331). No comments were received on the NPRM; however upon further review with the SLSMC, one proposed rule in the Seaway Navigation section regarding the vessel speed at which to approach a bridge is not included in the final rule.

The SLSDC is amending two sections of the Condition of Vessels portion of the joint Seaway regulations. Under section 401.10, "Mooring lines", the SLSDC is proposing to permit vessels with synthetic lines to transit the Seaway with a spliced eye of 1.8 m instead of the current 2.4 m. The SLSMC has conducted tests regarding the effectiveness of the smaller spliced eye and has determined that a spliced eye of 1.8 m for synthetic lines is sufficient for safety purposes. In addition, two changes are being made to section 401.12, "Minimum requirements—mooring lines and fairleads". These amendments would set specific requirements for each mooring line to ensure that safety is maintained through proper use of appropriate strength wire specific to vessel size. These changes are being made based on tests conducted by the SLSMC in conjunction with relevant industry stakeholders.

In the Radio Communications section, two changes are being made . The changes to section 401.61, "Assigned frequencies", and section 401.63, "Radio procedures", reflect the requirement that channel 12 is to be used in lieu of channel 13 in the Seaway Sodus sector. This change is based on two years of testing and troubeshooting radio problems on Lake Ontario that determined that channel 12 would provide a more effective communication medium than does channel 13. Corresponding edits have been proposed for Schedule III to reflect the channel change.

Two changes are being made to the "General" section. In section 401.90, "Boarding for inspection", vessels will be required to provide a safe and approved means of boarding for inspectors. Currently the pigeon holes used by inspectors to board vessels typically fill with ice and snow making access between the tug and barge a safety hazard. In section 401.94, "Keeping copies of documents", a vessel will be required to keep, in either electronic or paper form, a copy of: the vessel's valid inspection report; the rules and procedures; and, Seaway Notices for the current navigation year. The other changes to the joint regulations are merely editorial or to clarify existing requirements.

**Regulatory Evaluation**

This regulation involves a foreign affairs function of the United States and therefore Executive Order 12866 does not apply and evaluation under the Department of Transportation's Regulatory Policies and Procedures is not required.

**Regulatory Flexibility Act Determination**

I certify this regulation will not have a significant economic impact on a substantial number of small entities. The St. Lawrence Seaway Regulations and Rules primarily relate to commercial users of the Seaway, the vast majority of whom are foreign vessel operators. Therefore, any resulting costs will be borne mostly by foreign vessels.

**Environmental Impact**

This regulation does not require an environmental impact statement under the National Environmental Policy Act (49 U.S.C. 4321, *et reg.*) because it is not a major federal action significantly affecting the quality of the human environment.

**Federalism**

The Corporation has analyzed this rule under the principles and criteria in Executive Order 13132, dated August 4, 1999, and has determined that this proposal does not have sufficient federalism implications to warrant a Federalism Assessment.

**Unfunded Mandates**

The Corporation has analyzed this rule under Title II of the Unfunded Mandates Reform Act of 1995 (Pub. L. 104–4, 109 Stat. 48) and determined that it does not impose unfunded mandates on State, local, and tribal governments and the private sector requiring a written statement of economic and regulatory alternatives.

**Paperwork Reduction Act**

This regulation has been analyzed under the Paperwork Reduction Act of 1995 and does not contain new or modified information collection requirements subject to the Office of Management and Budget review.

**List of Subjects in 33 CFR Part 401**

Hazardous materials transportation, Navigation (water), Penalties, Radio, Reporting and recordkeeping requirements, Vessels, Waterways.

■ Accordingly, the Saint Lawrence Seaway Development Corporation is amending 33 CFR Part 401, Regulations and Rules, as follows:

## PART 401—SEAWAY REGULATIONS AND RULES

### Subpart A—Regulations

■ 1. The authority citation for subpart A of part 401 continues to read as follows:

**Authority:** 33 U.S.C. 983(a) and 984(a)(4), as amended; 49 CFR 1.52, unless otherwise noted.

■ 2. In § 401.10 revise paragraph (a)(3) and (b) to read as follows:

**§ 401.10 Mooring lines.**

(a) * * *

(3) Be fitted with a hand spliced eye or Flemish type mechanical spliced eye of not less than 2.4 m long for wire lines and 1.8 m long spliced eye for approved synthetic lines;

* * * * *

(b) Unless otherwise permitted by an officer, vessels greater than 150 m shall only use wire mooring lines with a breaking strength that complies with the minimum specifications set out in the table to this section shall be used for securing a vessel in lock chambers.

* * * * *

■ 3. In § 401.12 redesignate paragraph (a)(4) as (a)(3)(iii) and revise paragraphs (a)(1) introductory text, (a)(2), (a)(3) introductory text, and (b) introductory text to read as follows:

**§ 401.12 Minimum requirements—mooring lines and fairleads.**

(a) * * *

(1) Vessels of 100 m or less in overall length shall have at least three mooring lines—wires or synthetic hawsers, two of which shall be independently power operated and one if synthetic may be hand held.

* * * * *

(2) Vessels of more than 100 m but not more than 150 m in overall length shall have three mooring lines—wires or synthetic hawsers, which shall be independently power operated by winches, capstans or windlasses. All lines shall be led through closed chocks or fairleads acceptable to the Manager and the Corporation.

(3) Vessels of more than 150 m in overall length shall have four mooring lines—wires, independently power operated by the main drums of adequate power operated winches as follows:

* * * * *

(b) Unless otherwise permitted by the officer, the following table sets out the requirements for the location of fairleads or closed chocks for vessels of 100 m or more in overall length:

* * * * *

■ 4. Revise § 401.61 to read as follows:

**§ 401.61 Assigned frequencies.**

The Seaway stations operate on the following assigned VHF frequencies:

156.8 MHz—(channel 16)—Distress and Calling.

156.7 MHz—(channel 14)—Working (Canadian Stations in Sector 1 and the Welland Canal).

156.6 MHz—(channel 12)—Working (U.S. Station in Lake Ontario)

156.6 MHz—(channel 12)—Working (U.S. Stations in Sector 2 of the River).

156.55 MHz—(channel 11)—Working (Canadian Stations in Sector 3, Lake Ontario and Lake Erie).

■ 5. Revise § 401.63 to read as follows:

**§ 401.63 Radio Procedures.**

Every vessel shall use the channels of communication in each control sector as listed in the table to this section.

CHANNELS OF COMMUNICATION

| Station | Control sector number | Sector limits | Call in | Work | Listening watch |
|---|---|---|---|---|---|
| Seaway Beauharnois | 1 | C.I.P No. 2 to C.I.P No. 6–7 | Ch. 14 | Ch. 14 | Ch. 14. |
| Seaway Eisenhower | 2 | C.I.P. No. 6–7 to C.I.P. No. 10–11 | Ch. 12 | Ch. 12 | Ch. 12. |
| Seaway Iroquois | 3 | C.I.P. No. 10–11 To Crossover Island | Ch. 11 | Ch. 11 | Ch. 11. |
| Seaway Clayton | 4 | Crossover Island to Cape Vincent | Ch. 13 | Ch. 13 | Ch. 13. |
| Seaway Sodus | 4 | Cape Vincent to Mid Lake Ontario | Ch. 12 | Ch. 12 | Ch. 16. |
| Seaway Newcastle | 5 | Mid Lake Ontario To C.I.P. No. 15 | Ch. 11 | Ch. 11 | Ch. 16. |
| Seaway Welland | 6 | C.I.P. No. 15 to C.I.P. No. 16 | Ch. 14 | Ch. 14 | Ch. 14. |
| Seaway Long Point | 7 | C.I.P. No. 16 to Long Point | Ch. 11 | Ch. 11 | Ch. 16. |

■ 6. In § 401.90, add a new paragraph (d) to read as follows:

**§ 401.90 Boarding for inspections.**

* * * * *

(d) Vessels shall provide a safe and approved means of boarding. Pigeon holes are not accepted as a means of boarding and an alternate safe means of access shall be provided.

■ 7. In § 401.94, revise paragraph (a) to read as follows:

**§ 401.94 Keeping copies of documents.**

(a) A copy of these Regulations (subpart A of part 401), a copy of the vessel's valid Vessel Inspection Report and the Seaway Notices for the current navigation year shall be kept on board every vessel in transit. For the purposes of this section, a copy may be kept in either paper or electronic format so long as it can be accessed in the wheelhouse.

* * * * *

■ 8. In Schedule III to Subpart A—Calling-in table, revise sections numbered (18), (35), and (36) to read as follows:

SCHEDULE III TO SUBPART A OF PART 401—CALLING-IN TABLE

| C.I.P. and checkpoint | Station to call | Message content |
|---|---|---|
| * * | * * * | * * |
| 18. Sodus Point | Seaway Sodus, Channel 12 | 1. Name of Vessel.<br>2. Location.<br>3. ETA Mid-Lake Ontario. |
| * * | * * * | * * |
| 35. Mid-Lake Ontario-Entering Sector 4 | Seaway Sodus, Channel 12<br>2. Location. | 1. Name of Vessel. |
| 36. Sodus Point | Seaway Sodus, Channel 12 | 1. Name of Vessel.<br>2. Location.<br>3. Updated ETA Cape Vincent or Lake Ontario Port.<br>4. Confirm River Pilot Requirement.<br>5. Pilot requirement—Snell Lock and/or Upper Beauharnois Lock. (inland vessels only). |
| * * | * * * | * * |

* * * * *

Issued at Washington, DC, on March 3, 2010.

Saint Lawrence Seaway Development Corporation.

**Collister Johnson, Jr.,**

*Administrator.*

[FR Doc. 2010–4898 Filed 3–8–10; 8:45 am]

BILLING CODE 4910–61–P

## ENVIRONMENTAL PROTECTION AGENCY

## 40 CFR Part 52

**[EPA–R09–OAR–2009–0859; FRL–9123–3]**

## Revisions to the California State Implementation Plan, San Joaquin Valley Air Pollution Control District

**AGENCY:** Environmental Protection Agency (EPA).

**ACTION:** Final rule.

**SUMMARY:** EPA is finalizing approval of revisions to the San Joaquin Valley Air Pollution Control District (SJVAPCD) portion of the California State Implementation Plan (SIP). These revisions were proposed in the **Federal Register** on December 18, 2009 and concern reduction of animal matter and volatile organic compound (VOC) emissions from crude oil production, cutback asphalt, and petroleum solvent dry cleaning. We are approving local rules that regulate these emission sources under the Clean Air Act as amended in 1990 (CAA or the Act).

**DATES:** *Effective Date:* This rule is effective on April 8, 2010.

**ADDRESSES:** EPA has established docket number EPA–R09–OAR–2009–0859 for this action. The index to the docket is available electronically at *http://www.regulations.gov* and in hard copy at EPA Region IX, 75 Hawthorne Street, San Francisco, California. While all documents in the docket are listed in the index, some information may be publicly available only at the hard copy location (*e.g.,* copyrighted material), and some may not be publicly available in either location (*e.g.,* CBI). To inspect the hard copy materials, please schedule an appointment during normal business hours with the contact listed in the **FOR FURTHER INFORMATION CONTACT** section.

**FOR FURTHER INFORMATION CONTACT:** Joanne Wells, EPA Region IX, (415) 947–4118, *wells.joanne@epa.gov.*

**SUPPLEMENTARY INFORMATION:** Throughout this document, "we," "us" and "our" refer to EPA.

**Table of Contents**

I. Proposed Action
II. Public Comments and EPA Responses
III. EPA Action
IV. Statutory and Executive Order Reviews

## I. Proposed Action

On December 18, 2009 (74 FR 67154), EPA proposed to approve the following rules into the California SIP.

| Local agency | Rule No. | Rule title | Amended | Submitted |
|---|---|---|---|---|
| SJVAPCD | 4104 | Reduction of Animal Matter | 12/17/92 | 8/24/07 |
| SJVAPCD | 4404 | Heavy Oil Test Station—Kern County | 12/17/92 | 8/24/07 |
| SJVAPCD | 4641 | Cutback, Slow Cure, and Emulsified Asphalt, Paving and Maintenance Operations. | 12/17/92 | 8/24/07 |
| SJVAPCD | 4672 | Petroleum Solvent Dry Cleaning Operations | 12/17/92 | 8/24/07 |

We proposed to approve these rules because we determined that they complied with the relevant CAA requirements. Our proposed action contains more information on the rules and our evaluation.

## II. Public Comments and EPA Responses

EPA's proposed action provided a 30-day public comment period. We did not receive any comments on the proposed action.

## III. EPA Action

No comments were submitted that change our assessment that the submitted rules comply with the relevant CAA requirements. Therefore, as authorized in section 110(k)(3) of the Act, EPA is fully approving these rules into the California SIP.

## IV. Statutory and Executive Order Reviews

Under the Clean Air Act, the Administrator is required to approve a SIP submission that complies with the provisions of the Act and applicable Federal regulations. 42 U.S.C. 7410(k); 40 CFR 52.02(a). Thus, in reviewing SIP submissions, EPA's role is to approve State choices, provided that they meet the criteria of the Clean Air Act. Accordingly, this action merely approves State law as meeting Federal requirements and does not impose additional requirements beyond those imposed by State law. For that reason, this action:

- Is not a "significant regulatory action" subject to review by the Office of Management and Budget under Executive Order 12866 (58 FR 51735, October 4, 1993);
- Does not impose an information collection burden under the provisions of the Paperwork Reduction Act (44 U.S.C. 3501 *et seq.*);
- Is certified as not having a significant economic impact on a substantial number of small entities under the Regulatory Flexibility Act (5 U.S.C. 601 *et seq.*);
- Does not contain any unfunded mandate or significantly or uniquely affect small governments, as described in the Unfunded Mandates Reform Act of 1995 (Pub. L. 104–4);
- Does not have Federalism implications as specified in Executive Order 13132 (64 FR 43255, August 10, 1999);
- Is not an economically significant regulatory action based on health or safety risks subject to Executive Order 13045 (62 FR 19885, April 23, 1997);
- Is not a significant regulatory action subject to Executive Order 13211 (66 FR 28355, May 22, 2001);
- Is not subject to requirements of Section 12(d) of the National Technology Transfer and Advancement Act of 1995 (15 U.S.C. 272 note) because application of those requirements would be inconsistent with the Clean Air Act; and
- Does not provide EPA with the discretionary authority to address, as appropriate, disproportionate human health or environmental effects, using practicable and legally permissible methods, under Executive Order 12898 (59 FR 7629, February 16, 1994).

In addition, this rule does not have tribal implications as specified by Executive Order 13175 (65 FR 67249, November 9, 2000), because the SIP is not approved to apply in Indian country located in the State, and EPA notes that it will not impose substantial direct costs on tribal governments or preempt tribal law.

The Congressional Review Act, 5 U.S.C. 801 *et seq.,* as added by the Small Business Regulatory Enforcement Fairness Act of 1996, generally provides that before a rule may take effect, the agency promulgating the rule must submit a rule report, which includes a copy of the rule, to each House of the Congress and to the Comptroller General of the United States. EPA will submit a report containing this action and other required information to the U.S. Senate, the U.S. House of Representatives, and the Comptroller General of the United States prior to publication of the rule in the **Federal Register**. A major rule cannot take effect until 60 days after it is published in the **Federal Register**. This action is not a "major rule" as defined by 5 U.S.C. 804(2).

Under section 307(b)(1) of the Clean Air Act, petitions for judicial review of this action must be filed in the United States Court of Appeals for the appropriate circuit by May 10, 2010. Filing a petition for reconsideration by the Administrator of this final rule does not affect the finality of this action for the purposes of judicial review nor does it extend the time within which a petition for judicial review may be filed, and shall not postpone the effectiveness of such rule or action. This action may not be challenged later in proceedings to enforce its requirements (see section 307(b)(2)).

## List of Subjects in 40 CFR Part 52

Environmental protection, Air pollution control, Incorporation by reference, Intergovernmental relations, Ozone, Reporting and recordkeeping requirements, Volatile organic compounds.

Dated: February 12, 2010.

**Jane Diamond,**

*Acting Regional Administrator, Region IX.*

■ Part 52, Chapter I, Title 40 of the Code of Federal Regulations is amended as follows:

## PART 52—[AMENDED]

■ 1. The authority citation for Part 52 continues to read as follows:

**Authority:** 42 U.S.C. 7401 *et seq.*

### Subpart F—California

■ 2. Section 52.220 is amended by adding paragraph (c)(351) (i)(C) to read as follows:

**§ 52.220 Identification of plan.**

* * * * *

(c) * * *

(351) * * *

(i) * * *

(C) San Joaquin Valley Unified Air Pollution Control District.

(*1*) Rule 4104, "Reduction of Animal Matter," Rule 4404, "Heavy Oil Test Station—Kern County," adopted May 21, 1992 and amended on December 17, 1992.

(*2*) Rule 4641, "Cutback, Slow Cure, and Emulsified Asphalt, Paving and Maintenance Operations," Rule 4672, "Petroleum Solvent Dry Cleaning Operations," adopted April 11, 1991 and amended on December 17, 1992.

* * * * *

[FR Doc. 2010–4967 Filed 3–8–10; 8:45 am]

BILLING CODE 6560–50–P

## FEDERAL COMMUNICATIONS COMMISSION

### 47 CFR Part 73

**[DA 10–340; MB Docket No. 10–21; RM–11590]**

### Television Broadcasting Services; Birmingham, AL

**AGENCY:** Federal Communications Commission.

**ACTION:** Final rule.

**SUMMARY:** The Commission has before it a petition for rulemaking filed by Alabama Educational Television Commission, the licensee of noncommercial educational station WBIQ(TV), channel *10, Birmingham, Alabama, requesting the substitution of channel *39 for channel *10 at Birmingham.

**DATES:** This rule is effective March 9, 2010.

**FOR FURTHER INFORMATION CONTACT:** Adrienne Y. Denysyk, Media Bureau, (202) 418–1600.

**SUPPLEMENTARY INFORMATION:** This is a synopsis of the Commission's *Report and Order,* MB Docket No. 10–21, adopted February 26, 2010, and released March 2, 2010. The full text of this document is available for public inspection and copying during normal business hours in the FCC's Reference Information Center at Portals II, CY–A257, 445 12th Street, SW., Washington, DC 20554. This document will also be available via ECFS (*http://fjallfoss.fcc.gov/ecfs/*). This document may be purchased from the Commission's duplicating contractor, Best Copy and Printing, Inc., 445 12th Street, SW., Room CY–B402, Washington, DC 20554, telephone 1–800–478–3160 or via the company's Web site, *http://www.bcipweb.com.* To request materials in accessible formats for people with disabilities (braille, large print, electronic files, audio format), send an e-mail to *fcc504@fcc.gov* or call the Consumer & Governmental Affairs Bureau at 202–418–0530 (voice), 202–418–0432 (tty).

This document does not contain information collection requirements subject to the Paperwork Reduction Act of 1995, Public Law 104–13. In addition, therefore, it does not contain any information collection burden "for small business concerns with fewer than 25 employees," pursuant to the Small Business Paperwork Relief Act of 2002, Public Law 107–198, *see* 44 U.S.C. 3506(c)(4). Provisions of the Regulatory Flexibility Act of 1980 do not apply to this proceeding.

The Commission will send a copy of this *Report and Order* in a report to be sent to Congress and the Government Accountability Office pursuant to the Congressional review Act, *see* 5 U.S.C. 801(a)(1)(A).

**List of Subjects in 47 CFR Part 73**

Television, Television broadcasting.

■ For the reasons discussed in the preamble, the Federal Communications Commission amends 47 CFR Part 73 as follows:

## PART 73—RADIO BROADCAST SERVICES

■ 1. The authority citation for part 73 continues to read as follows:

**Authority:** 47 U.S.C. 154, 303, 334, 336.

**§ 73.622 [Amended]**

■ 2. Section 73.622(i), the Post-Transition Table of DTV Allotments under Alabama, is amended by adding channel *39 and removing channel *10 at Birmingham.

Federal Communications Commission.

**Clay C. Pendarvis,**

*Associate Chief, Video Division, Media Bureau.*

[FR Doc. 2010–4980 Filed 3–8–10; 8:45 am]

BILLING CODE 6712–01–P

## FEDERAL COMMUNICATIONS COMMISSION

### 47 CFR Part 80

**[WT Docket No. 04–257 and RM–10743; FCC 10–6]**

### Maritime Communications

**ACTION:** Final rule; correction.

**SUMMARY:** The Federal Communications Commission published in the **Federal Register** of February 2, 2010 (75 FR 5241), a document in the Maritime Radio Services, WT Docket No. 04–257, which included a Final Rules Appendix that reflected the amended adoption of a certain rule. This document corrects the amendment of that section as set forth below.

**DATES:** March 9, 2010.

**FOR FURTHER INFORMATION CONTACT:** Stana Kimball, Mobility Division, Wireless Telecommunications Bureau, at *Stanislava.Kimball@FCC.gov* or at (202) 418–1306, or TTY (202) 418–7233.

**SUPPLEMENTARY INFORMATION:** The Federal Communications Commission published a document in the **Federal Register** of February 2, 2010 (75 FR 5241) to ensure that its rules governing the Maritime Radio Services continue to promote maritime safety, maximize effective and efficient use of the spectrum available for maritime communications, accommodate technological innovation, avoid unnecessary regulatory burdens, and maintain consistency with international maritime standards to the extent consistent with the United States public interest. This document corrects a rule amendment set forth in the document published in the **Federal Register** of February 2, 2010 (75 FR 5241).

In rule FR Doc. 2010–2095 published on February 2, 2010 (75 FR 5241), make the following correction:

**§ 80.385 [Corrected]**

■ On page 5241, in the third column, revise paragraph (a)(1) to read as follows:

"(a) * * *

(1) The Automated Maritime Communications System (AMTS) is an automated maritime telecommunications system."

Federal Communications Commission.

**Marlene H. Dortch,**

*Secretary.*

[FR Doc. 2010–4603 Filed 3–8–10; 8:45 am]

**BILLING CODE 6712–01–P**

## DEPARTMENT OF COMMERCE

### National Oceanic and Atmospheric Administration

### 50 CFR Part 622

**[Docket No. 060525140–6221–02]**

**RIN 0648–XU16**

### Fisheries of the Caribbean, Gulf of Mexico, and South Atlantic; Snapper-Grouper Resources of the South Atlantic; Trip Limit Reduction

**AGENCY:** National Marine Fisheries Service (NMFS), National Oceanic and Atmospheric Administration (NOAA), Commerce.

**ACTION:** Temporary rule; trip limit reduction.

**SUMMARY:** NMFS reduces the commercial trip limit for golden tilefish in the South Atlantic to 300 lb (136 kg) per trip in or from the exclusive economic zone (EEZ). This trip limit reduction is necessary to protect the South Atlantic golden tilefish resource.

**DATES:** This rule is effective 12:01 a.m., local time, March 18, 2010, through December 31, 2010, unless changed by further notification in the **Federal Register**.

**FOR FURTHER INFORMATION CONTACT:** Catherine Bruger, telephone 727–824–5305, fax 727–824–5308, e-mail *Catherine.Bruger@noaa.gov*.

**SUPPLEMENTARY INFORMATION:** The snapper-grouper fishery of the South Atlantic is managed under the Fishery Management Plan for the Snapper-Grouper Resources of the South Atlantic (FMP). The FMP was prepared by the South Atlantic Fishery Management Council and is implemented under the authority of the Magnuson-Stevens Fishery Conservation and Management Act by regulations at 50 CFR part 622.

Under 50 CFR 622.44(c)(2), NMFS is required to reduce the trip limit in the commercial fishery for golden tilefish from 4,000 lb (1,814 kg) to 300 lb (136 kg) per trip when 75 percent of the fishing year quota is met, by filing a notification to that effect in the **Federal Register**. Based on current statistics, NMFS has determined that 75 percent of the available commercial quota of 295,000 lb (133,810 kg), gutted weight, for golden tilefish will be reached on or before March 18, 2010. Accordingly, NMFS is reducing the commercial golden tilefish trip limit to 300 lb (136 kg) in the South Atlantic EEZ from 12:01 a.m., local time, on March 18, 2010, until the quota is reached and the fishery closes or through December 31, 2010, whichever occurs first.

### Classification

This action responds to the best available information recently obtained from the fishery. The Assistant Administrator for Fisheries, NOAA, (AA), finds good cause to waive the requirement to provide prior notice and opportunity for public comment pursuant to the authority set forth at 5 U.S.C. 553(b)(B) as such prior notice and opportunity for public comment is unnecessary and contrary to the public interest. Such procedures would be unnecessary because the rule itself has already been subject to notice and comment, and all that remains is to notify the public of the trip limit reduction. Allowing prior notice and opportunity for public comment is contrary to the public interest because of the need to immediately implement this action to protect the fishery because the capacity of the fishing fleet allows for rapid harvest of the quota. Prior notice and opportunity for public comment would require time and would potentially result in a harvest well in excess of the established quota.

For the aforementioned reasons, the AA also finds good cause to waive the 30–day delay in the effectiveness of this action under 5 U.S.C. 553(d)(3).

This action is taken under 50 CFR 622.43(a) and is exempt from review under Executive Order 12866.

**Authority:** 16 U.S.C. 1801 *et seq.*

Dated: March 3, 2010.

**Emily H. Menashes,**

*Acting Director, Office of Sustainable Fisheries, National Marine Fisheries Service.*

[FR Doc. 2010–4985 Filed 3–4–10; 4:15 pm]

**BILLING CODE 3510–22–S**

# Proposed Rules

Federal Register
Vol. 75, No. 45
Tuesday, March 9, 2010

This section of the FEDERAL REGISTER contains notices to the public of the proposed issuance of rules and regulations. The purpose of these notices is to give interested persons an opportunity to participate in the rule making prior to the adoption of the final rules.

## DEPARTMENT OF TRANSPORTATION

### Federal Aviation Administration

### 14 CFR Part 39

**[Docket No. FAA–2010–0235; Directorate Identifier 2010–CE–010–AD]**

**RIN 2120–AA64**

## Airworthiness Directives; AeroSpace Technologies of Australia Pty Ltd Models N22B, N22S, and N24A Airplanes

**AGENCY:** Federal Aviation Administration (FAA), Department of Transportation (DOT).

**ACTION:** Notice of proposed rulemaking (NPRM).

**SUMMARY:** We propose to adopt a new airworthiness directive (AD) for the products listed above that would supersede an existing AD. This proposed AD results from mandatory continuing airworthiness information (MCAI) originated by an aviation authority of another country to identify and correct an unsafe condition on an aviation product. The MCAI describes the unsafe condition as: The results of full scale fatigue tests being conducted by the manufacturer have shown the need for inspection of critical fastener holes in the stub wing upper front spar cap, near the wing strut attachment. The proposed AD would require actions that are intended to address the unsafe condition described in the MCAI.

**DATES:** We must receive comments on this proposed AD by April 23, 2010.

**ADDRESSES:** You may send comments by any of the following methods:

- *Federal eRulemaking Portal:* Go to *http://www.regulations.gov.* Follow the instructions for submitting comments.
- *Fax:* (202) 493–2251.
- *Mail:* U.S. Department of Transportation, Docket Operations, M–30, West Building Ground Floor, Room W12–140, 1200 New Jersey Avenue, SE., Washington, DC 20590.
- *Hand Delivery:* U.S. Department of Transportation, Docket Operations, M–30, West Building Ground Floor, Room W12–140, 1200 New Jersey Avenue, SE., Washington, DC 20590, between 9 a.m. and 5 p.m., Monday through Friday, except Federal holidays.

### Examining the AD Docket

You may examine the AD docket on the Internet at *http://www.regulations.gov;* or in person at the Docket Management Facility between 9 a.m. and 5 p.m., Monday through Friday, except Federal holidays. The AD docket contains this proposed AD, the regulatory evaluation, any comments received, and other information. The street address for the Docket Office (telephone (800) 647–5527) is in the **ADDRESSES** section. Comments will be available in the AD docket shortly after receipt.

**FOR FURTHER INFORMATION CONTACT:** Doug Rudolph, Aerospace Engineer, FAA, Small Airplane Directorate, 901 Locust, Room 301, Kansas City, Missouri 64106; telephone: (816) 329–4059; fax: (816) 329–4090; e-mail: *doug.rudolph@faa.gov.*

**SUPPLEMENTARY INFORMATION:**

### Comments Invited

We invite you to send any written relevant data, views, or arguments about this proposed AD. Send your comments to an address listed under the **ADDRESSES** section. Include "Docket No. FAA–2010–0235; Directorate Identifier 2010–CE–010–AD" at the beginning of your comments. We specifically invite comments on the overall regulatory, economic, environmental, and energy aspects of this proposed AD. We will consider all comments received by the closing date and may amend this proposed AD because of those comments.

We will post all comments we receive, without change, to *http://regulations.gov,* including any personal information you provide. We will also post a report summarizing each substantive verbal contact we receive about this proposed AD.

### Discussion

On July 11, 1997, we issued AD 97–11–12, Amendment 39–10041 (62 FR 28997, May 29, 1997). That AD required actions intended to address an unsafe condition on the products listed above.

Since we issued AD 97–11–12, the manufacturer has revised the service information to simplify the visual inspection method.

The Civil Aviation Safety Authority (CASA), which is the aviation authority for Australia, has issued AD GAF–N22–52, Amendment 1, dated January 2010 (referred to after this as "the MCAI"), to correct an unsafe condition for the specified products. The MCAI states:

> The results of full scale fatigue tests being conducted by the manufacturer have shown the need for inspection of critical fastener holes in the stub wing upper front spar cap, near the wing strut attachment.
>
> Amendment 1 adopts the manufacturer's latest service bulletin. Its new inspection method avoids having to remove the Huck bolts and the potential to damage the holes.

You may obtain further information by examining the MCAI in the AD docket.

### Relevant Service Information

AeroSpace Technologies of Australia Limited has issued Nomad Service Bulletin NMD–53–22, dated April 17, 2007. The actions described in this service information are intended to correct the unsafe condition identified in the MCAI.

### FAA's Determination and Requirements of the Proposed AD

This product has been approved by the aviation authority of another country, and is approved for operation in the United States. Pursuant to our bilateral agreement with this State of Design Authority, they have notified us of the unsafe condition described in the MCAI and service information referenced above. We are proposing this AD because we evaluated all information and determined the unsafe condition exists and is likely to exist or develop on other products of the same type design.

### Differences Between This Proposed AD and the MCAI or Service Information

We have reviewed the MCAI and related service information and, in general, agree with their substance. But we might have found it necessary to use different words from those in the MCAI to ensure the AD is clear for U.S. operators and is enforceable. In making these changes, we do not intend to differ substantively from the information provided in the MCAI and related service information.

We might also have proposed different actions in this AD from those in the MCAI in order to follow FAA

policies. Any such differences are highlighted in a NOTE within the proposed AD.

### Costs of Compliance

We estimate that this proposed AD will affect 25 products of U.S. registry. We also estimate that it would take about 2 work-hours per product to comply with the basic requirements of this proposed AD. The average labor rate is $85 per work-hour.

Based on these figures, we estimate the cost of the proposed AD on U.S. operators to be $4,250, or $170 per product.

In addition, we estimate that any necessary follow-on actions would take about 4 work-hours and require parts costing $2,500, for a cost of $2,840 per product. We have no way of determining the number of products that may need these actions.

### Authority for This Rulemaking

Title 49 of the United States Code specifies the FAA's authority to issue rules on aviation safety. Subtitle I, section 106, describes the authority of the FAA Administrator. "Subtitle VII: Aviation Programs," describes in more detail the scope of the Agency's authority.

We are issuing this rulemaking under the authority described in "Subtitle VII, Part A, Subpart III, section 44701: General requirements." Under that section, Congress charges the FAA with promoting safe flight of civil aircraft in air commerce by prescribing regulations for practices, methods, and procedures the Administrator finds necessary for safety in air commerce. This regulation is within the scope of that authority because it addresses an unsafe condition that is likely to exist or develop on products identified in this rulemaking action.

### Regulatory Findings

We determined that this proposed AD would not have federalism implications under Executive Order 13132. This proposed AD would not have a substantial direct effect on the States, on the relationship between the national government and the States, or on the distribution of power and responsibilities among the various levels of government.

For the reasons discussed above, I certify this proposed regulation:

1. Is not a "significant regulatory action" under Executive Order 12866;

2. Is not a "significant rule" under the DOT Regulatory Policies and Procedures (44 FR 11034, February 26, 1979); and

3. Will not have a significant economic impact, positive or negative, on a substantial number of small entities under the criteria of the Regulatory Flexibility Act.

We prepared a regulatory evaluation of the estimated costs to comply with this proposed AD and placed it in the AD docket.

### List of Subjects in 14 CFR Part 39

Air transportation, Aircraft, Aviation safety, Incorporation by reference, Safety.

### The Proposed Amendment

Accordingly, under the authority delegated to me by the Administrator, the FAA proposes to amend 14 CFR part 39 as follows:

## PART 39—AIRWORTHINESS DIRECTIVES

1. The authority citation for part 39 continues to read as follows:

**Authority:** 49 U.S.C. 106(g), 40113, 44701.

### § 39.13 [Amended]

2. The FAA amends § 39.13 by removing Amendment 39–10041 (62 FR 28997, May 29, 1997), and adding the following new AD:

**AeroSpace Technologies of Australia Pty Ltd:** Docket No. FAA–2010–0235; Directorate Identifier 2010–CE–010–AD.

#### Comments Due Date

(a) We must receive comments by April 23, 2010.

#### Affected ADs

(b) This AD supersedes 97–11–12, Amendment 39–10041.

#### Applicability

(c) This AD applies to Models N22B, N22S, and N24A airplanes, all serial numbers, certificated in any category.

#### Subject

(d) Air Transport Association of America (ATA) Code 57: Wings.

#### Reason

(e) The mandatory continuing airworthiness information (MCAI) states:

The results of full scale fatigue tests being conducted by the manufacturer have shown the need for inspection of critical fastener holes in the stub wing upper front spar cap, near the wing strut attachment.

Amendment 1 adopts the manufacturer's latest service bulletin. Its new inspection method avoids having to remove the Huck bolts and the potential to damage the holes.

#### Actions and Compliance

(f) Unless already done, do the following actions in accordance with Nomad Service Bulletin NMD–53–22, dated April 17, 2007:

(1) Within the next 100 hours time-in-service (TIS) after the effective date of this AD or within the next 90 days after the effective date of this AD, whichever occurs first, install an inspection hole in the left-hand and right-hand stub wing bottom skin.

(2) Before further flight after installing the inspection holes required in paragraph (f)(1) of this AD, initially inspect the stub wing front spar cap for cracks. Repetitively inspect thereafter every 600 hours TIS.

(3) If any crack is found during any inspection required in paragraph (f)(2) of this AD, before further flight contact Customer Support Manager, Gippsland Aeronautics Pty Ltd., P.O. Box 881, MORWELL, Victoria, 3040, Australia; phone: +61 3 5172 1200; fax: +61 3 5172 1201; e-mail: *support@gippsaero.com,* for an FAA-approved repair scheme/modification and incorporate the repair scheme/modification. Due to FAA policy, the repair scheme/modification for crack damage must include an immediate repair of the crack. The repair scheme cannot be by repetitive inspection only. The repair scheme/modification may incorporate repetitive inspections in addition to the repetitive inspections required in paragraph (f)(2) of this AD. Continued operational flight with un-repaired crack damage is not permitted.

#### FAA AD Differences

**Note:** This AD differs from the MCAI and/or service information as follows: The MCAI states to follow the service bulletin. The service bulletin does not specifically call out a corrective action if cracks are found. The FAA is including specific instruction of corrective action in the AD.

#### Other FAA AD Provisions

(g) The following provisions also apply to this AD:

(1) *Alternative Methods of Compliance (AMOCs):* The Manager, Standards Office, FAA, has the authority to approve AMOCs for this AD, if requested using the procedures found in 14 CFR 39.19. Send information to ATTN: Doug Rudolph, Aerospace Engineer, FAA, Small Airplane Directorate, 901 Locust, Room 301, Kansas City, Missouri 64106; telephone: (816) 329–4059; fax: (816) 329–4090. Before using any approved AMOC on any airplane to which the AMOC applies, notify your appropriate principal inspector (PI) in the FAA Flight Standards District Office (FSDO), or lacking a PI, your local FSDO.

(2) *Airworthy Product:* For any requirement in this AD to obtain corrective actions from a manufacturer or other source, use these actions if they are FAA-approved. Corrective actions are considered FAA-approved if they are approved by the State of Design Authority (or their delegated agent). You are required to assure the product is airworthy before it is returned to service.

(3) *Reporting Requirements:* For any reporting requirement in this AD, under the provisions of the Paperwork Reduction Act (44 U.S.C. 3501 *et seq.*), the Office of Management and Budget (OMB) has approved the information collection requirements and has assigned OMB Control Number 2120–0056.

#### Related Information

(h) Refer to MCAI Civil Aviation Safety Authority (CASA) AD GAF–N22–52,

Amendment 1, dated January 2010; and Nomad Service Bulletin NMD–53–22, dated April 17, 2007, for related information.

Issued in Kansas City, Missouri, on March 2, 2010.

**Sandra J. Campbell,**

*Acting Manager, Small Airplane Directorate, Aircraft Certification Service.*

[FR Doc. 2010–5009 Filed 3–8–10; 8:45 am]

**BILLING CODE 4910–13–P**

## DEPARTMENT OF TRANSPORTATION

## Federal Aviation Administration

## 14 CFR Part 39

**[Docket No. FAA–2010–0220; Directorate Identifier 2008–NM–166–AD]**

**RIN 2120–AA64**

## Airworthiness Directives; Fokker Services B.V. Model F.28 Mark 0070 and 0100 Airplanes

**AGENCY:** Federal Aviation Administration (FAA), DOT.

**ACTION:** Notice of proposed rulemaking (NPRM).

**SUMMARY:** We propose to adopt a new airworthiness directive (AD) for the products listed above. This proposed AD results from mandatory continuing airworthiness information (MCAI) originated by an aviation authority of another country to identify and correct an unsafe condition on an aviation product. The MCAI describes the unsafe condition as: Due to their position on the airplane, fuel fire shut-off valve actuators P/N [part number] 9409122 are susceptible to freezing, which has an adverse effect on the operation of the valve. Also, due to various causes, the failure rate of [fuel fire shut-off valve] actuator P/N 9409122 is higher than expected. Failure or freezing of the actuator may prevent the flight crew to close the fuel fire shut-off valve in case of an engine fire. Due to their position on the aeroplane, fuel crossfeed valve actuators P/N 9409122 are susceptible to freezing, which has an adverse effect on the operation of the valve. This condition, if not corrected, may generate fuel asymmetry alerts when a valve remains in the open position after being selected closed. It may also prevent the flight crew from correcting a fuel asymmetry when a valve remains in the closed position after being selected open. One event was reported where, due to such problems, the flight crew shut down an engine in-flight and diverted the aircraft. [D]ue to their position on the aircraft, ice may form on actuators P/N 9409122 installed on fuel crossfeed valves and fuel fire shut-off valves. Tests revealed that the ice can prevent the actuator and thus the valve from operating in flight (frozen stuck).

The proposed AD would require actions that are intended to address the unsafe condition described in the MCAI.

**DATES:** We must receive comments on this proposed AD by April 23, 2010.

**ADDRESSES:** You may send comments by any of the following methods:

- *Federal eRulemaking Portal:* Go to *http://www.regulations.gov*. Follow the instructions for submitting comments.
- *Fax:* (202) 493–2251.
- *Mail:* U.S. Department of Transportation, Docket Operations, M–30, West Building Ground Floor, Room W12–140, 1200 New Jersey Avenue, SE., Washington, DC 20590.
- *Hand Delivery:* U.S. Department of Transportation, Docket Operations, M–30, West Building Ground Floor, Room W12–40, 1200 New Jersey Avenue, SE., Washington, DC, between 9 a.m. and 5 p.m., Monday through Friday, except Federal holidays.

For service information identified in this proposed AD, contact Fokker Services B.V., Technical Services Dept., P.O. Box 231, 2150 AE Nieuw-Vennep, the Netherlands; telephone +31 (0)252–627–350; fax +31 (0)252–627–211; e-mail *technicalservices.fokkerservices@stork.com;* Internet *http://www.myfokkerfleet.com*. You may review copies of the referenced service information at the FAA, Transport Airplane Directorate, 1601 Lind Avenue, SW., Renton, Washington. For information on the availability of this material at the FAA, call 425–227–1221 or 425–227–1152.

### Examining the AD Docket

You may examine the AD docket on the Internet at *http://www.regulations.gov;* or in person at the Docket Operations office between 9 a.m. and 5 p.m., Monday through Friday, except Federal holidays. The AD docket contains this proposed AD, the regulatory evaluation, any comments received, and other information. The street address for the Docket Operations office (telephone (800) 647–5527) is in the **ADDRESSES** section. Comments will be available in the AD docket shortly after receipt.

**FOR FURTHER INFORMATION CONTACT:** Tom Rodriguez, Aerospace Engineer, International Branch, ANM–116, Transport Airplane Directorate, FAA, 1601 Lind Avenue, SW., Renton, Washington 98057–3356; telephone (425) 227–1137; fax (425) 227–1149.

**SUPPLEMENTARY INFORMATION:**

### Comments Invited

We invite you to send any written relevant data, views, or arguments about this proposed AD. Send your comments to an address listed under the **ADDRESSES** section. Include "Docket No. FAA–2010–0220; Directorate Identifier 2008–NM–166–AD" at the beginning of your comments. We specifically invite comments on the overall regulatory, economic, environmental, and energy aspects of this proposed AD. We will consider all comments received by the closing date and may amend this proposed AD based on those comments.

We have lengthened the 30-day comment period for proposed ADs that address MCAI originated by aviation authorities of other countries to provide adequate time for interested parties to submit comments. The comment period for these proposed ADs is now typically 45 days, which is consistent with the comment period for domestic transport ADs.

We will post all comments we receive, without change, to *http://www.regulations.gov,* including any personal information you provide. We will also post a report summarizing each substantive verbal contact we receive about this proposed AD.

### Discussion

The European Aviation Safety Agency (EASA), which is the Technical Agent for the Member States of the European Community, has issued EASA Airworthiness Directives 2009–0168, dated August 3, 2009; 2009–0116, dated May 29, 2009; and 2007–0122, dated May 3, 2007 (corrected May 7, 2007) (referred to after this as "the MCAI"); to correct an unsafe condition for the specified products. EASA AD 2007–0122 states:

> In-service experience revealed that, due to their position on the aircraft, ice may form on actuators P/N 9409122 installed on fuel crossfeed valves and fuel fire shut-off valves. Tests revealed that the ice can prevent the actuator and thus the valve from operating in flight (frozen stuck). A new actuator is being developed by Fokker Services. However, an airworthiness assessment revealed that interim actions are required for actuators p/n 9409122 installed on fuel crossfeed valves and fuel fire shut-off valves until the new actuators are installed. Fokker Services have issued Service Bulletin (SB) SBF100–28–049 to introduce interim actions that will reduce the probability that fuel crossfeed and fuel fire shut-off valves equipped with actuators p/n 9409122 do not operate due to ice. The interim actions consist of an operational check of the actuators and the application of a grease layer on the actuators, followed by a weekly visual check of the applied grease layer and a 4-weekly operational check of the actuators.

For the reasons stated above, this Airworthiness Directive (AD) requires compliance with instructions contained in the referenced SB. This AD has been re-published to correct typographical errors in the 'Remarks' section, where the word 'Proposed' should have been deleted.

EASA AD 2009–0116 states:

Due to their position on the aeroplane, fuel crossfeed valve actuators P/N 9409122 are susceptible to freezing, which has an adverse effect on the operation of the valve. This condition, if not corrected, may generate fuel asymmetry alerts when a valve remains in the open position after being selected closed. It may also prevent the flight crew from correcting a fuel asymmetry when a valve remains in the closed position after being selected open. One event was reported where, due to such problems, the flight crew shut down an engine in-flight and diverted the aircraft.

Aeroplanes with serial numbers 11244 through 11441 were delivered from the production line with actuators P/N 9401037 ("chimney type") installed. However, on some aeroplanes, these actuators have subsequently been replaced in service with actuators P/N 9409122 (using mounting blocks P/N 7923505) on one or both fuel crossfeed valves. As a result, those aeroplanes are also affected by this unsafe condition.

To address and correct this unsafe condition, EASA issued AD 2008–0126 that required the replacement of all P/N 9409122 fuel crossfeed valve actuators in accordance with Fokker Services SBF100–28–046 with new actuators developed by the manufacturer Eaton Aerospace, P/N 53–0013, which have improved reliability and are less susceptible to freezing.

Following the introduction of actuator P/N 53–0013 in service, Eaton Aerospace reported manufacturing and design errors on actuators with P/N 53–0013. As a result of these errors, the top-cap of the actuator may become loose, possibly leading to actuator failure. Eaton Aerospace has eliminated these problems by introducing a new actuator P/N 53–0027 and Fokker Services have published SBF100–28–061 to introduce these improved actuators on aeroplanes.

As the compliance time of EASA AD 2008–0126 has not yet expired, both P/N 9409122 and P/N 53–0013 fuel crossfeed valve actuators can currently be installed on aeroplanes affected by this AD.

For the reasons described above, this EASA AD retains the requirements of AD 2008–0126, which is superseded, and adds the requirement to install the new P/N 53–0027 actuators. This AD also allows direct installation of P/N 53–0027 on aeroplanes that are still in pre-SBF100–28–046 configuration, provided this is done within the compliance time as established for that SB in AD 2008–0126 and retained by this new AD.

EASA AD 2009–0168 states:

Due to their position on the aeroplane, fuel fire shut-off valve actuators P/N 9409122 are susceptible to freezing, which has an adverse effect on the operation of the valve. Also, due to various causes, the failure rate of actuator P/N 9409122 is higher than expected. Failure or freezing of the actuator may prevent the flight crew to close the fuel fire shut-off valve in case of an engine fire.

Aeroplanes with serial numbers 11244 through 11441 were delivered from the production line with actuators P/N 9401037 ("chimney type") installed. However, on some aeroplanes, these actuators have subsequently been replaced in service with actuators P/N 9409122 (using mounting blocks P/N 7923505) on one or both fuel fire shut-off valves. As a result, those aeroplanes are also affected by this unsafe condition.

To address and correct this unsafe condition, EASA issued AD 2008–0193, requiring the replacement of all P/N 9409122 fuel fire shut-off valve actuators with new actuators developed by the manufacturer Eaton Aerospace, P/N 53–0013, which have improved reliability and are less susceptible to freezing.

Following the introduction of actuator P/N 53–0013 in service, Eaton Aerospace reported manufacturing and design errors on actuators with P/N 53–0013. As a result of these errors, the top-cap of the actuator may become loose, possibly leading to actuator failure. Eaton Aerospace has eliminated these problems by introducing a new actuator P/N 53–0027 and Fokker Services have published SBF100–76–020 to introduce these improved actuators on aeroplanes.

As a consequence of EASA AD 2008–0193, both P/N 9409122 and P/N 53–0013 fuel fire shut-off valve actuators are currently installed on aeroplanes affected by this AD.

For the reasons described above, this EASA AD supersedes AD 2008–0193 and requires the installation of new P/N 53–0027 actuators. This AD also prohibits the installation of P/N 53–0013 actuators in accordance with SBF100–76–018 (which has been cancelled), as previously required by EASA AD 2008–0193.

You may obtain further information by examining the MCAI in the AD docket.

**Relevant Service Information**

Fokker Services B.V. has issued the service bulletins identified in the following table.

TABLE—SERVICE INFORMATION

| Fokker Service Bulletin— | Dated— |
|---|---|
| SBF100–28–046, including the drawings identified in the subsequent table, "Table—Drawings Included in Fokker Service Bulletin SBF100–28–046" | March 27, 2008. |
| SBF100–28–049 | April 3, 2007. |
| SBF100–28–061, including the drawings identified in the subsequent table, "Table—Drawings Included in Fokker Service Bulletin SBF100–28–061" | April 20, 2009. |
| SBF100–76–020, including the drawings identified in the subsequent table, "Table—Drawings Included in Fokker Service Bulletin SBF100–76–020, and including Fokker Manual Change Notification—Maintenance Documentation MCNM–F100–133, dated April 20, 2009" | April 20, 2009. |

TABLE—DRAWINGS INCLUDED IN FOKKER SERVICE BULLETIN SBF100–28–046

| Fokker drawing— | Sheet— | Issue— | Dated— |
|---|---|---|---|
| W41194 | 007 | D | March 27, 2008. |
| W41194 | 008 | D | March 27, 2008. |

TABLE—DRAWINGS INCLUDED IN FOKKER SERVICE BULLETIN SBF100–28–061

| Fokker Drawing— | Sheet— | Issue— | Dated— |
|---|---|---|---|
| W41194 | 007 | D | April 20, 2009. |
| W41194 | 008 | D | April 20, 2009. |

TABLE—DRAWINGS INCLUDED IN FOKKER SERVICE BULLETIN SBF100–76–020

| Fokker drawing— | Sheet— | Issue— | Dated— |
|---|---|---|---|
| W41460 | 002 | Original | April 20, 2009. |
| W41460 | 003 | Original | April 20, 2009. |
| W59170 | 012 | AC | March 20, 2008. |

The actions described in this service information are intended to correct the unsafe condition identified in the MCAI.

**FAA's Determination and Requirements of This Proposed AD**

This product has been approved by the aviation authority of another country, and is approved for operation in the United States. Pursuant to our bilateral agreement with the State of Design Authority, we have been notified of the unsafe condition described in the MCAI and service information referenced above. We are proposing this AD because we evaluated all pertinent information and determined an unsafe condition exists and is likely to exist or develop on other products of the same type design.

**Differences Between This AD and the MCAI or Service Information**

We have reviewed the MCAI and related service information and, in general, agree with their substance. But we might have found it necessary to use different words from those in the MCAI to ensure the AD is clear for U.S. operators and is enforceable. In making these changes, we do not intend to differ substantively from the information provided in the MCAI and related service information.

We might also have proposed different actions in this AD from those in the MCAI in order to follow FAA policies. Any such differences are highlighted in a NOTE within the proposed AD.

**Costs of Compliance**

Based on the service information, we estimate that this proposed AD would affect about 2 products of U.S. registry. We also estimate that it would take about 23 work-hours per product to comply with the basic requirements of this proposed AD. The average labor rate is $85 per work-hour. Required parts would cost about $29,800 per product. Where the service information lists required parts costs that are covered under warranty, we have assumed that there will be no charge for these costs. As we do not control warranty coverage for affected parties, some parties may incur costs higher than estimated here. Based on these figures, we estimate the cost of the proposed AD on U.S. operators to be $63,510, or $31,755 per product.

**Authority for This Rulemaking**

Title 49 of the United States Code specifies the FAA's authority to issue rules on aviation safety. Subtitle I, section 106, describes the authority of the FAA Administrator. "Subtitle VII: Aviation Programs," describes in more detail the scope of the Agency's authority.

We are issuing this rulemaking under the authority described in "Subtitle VII, Part A, Subpart III, Section 44701: General requirements." Under that section, Congress charges the FAA with promoting safe flight of civil aircraft in air commerce by prescribing regulations for practices, methods, and procedures the Administrator finds necessary for safety in air commerce. This regulation is within the scope of that authority because it addresses an unsafe condition that is likely to exist or develop on products identified in this rulemaking action.

**Regulatory Findings**

We determined that this proposed AD would not have federalism implications under Executive Order 13132. This proposed AD would not have a substantial direct effect on the States, on the relationship between the national Government and the States, or on the distribution of power and responsibilities among the various levels of government.

For the reasons discussed above, I certify this proposed regulation:

1. Is not a "significant regulatory action" under Executive Order 12866;

2. Is not a "significant rule" under the DOT Regulatory Policies and Procedures (44 FR 11034, February 26, 1979); and

3. Will not have a significant economic impact, positive or negative, on a substantial number of small entities under the criteria of the Regulatory Flexibility Act.

We prepared a regulatory evaluation of the estimated costs to comply with this proposed AD and placed it in the AD docket.

**List of Subjects in 14 CFR Part 39**

Air transportation, Aircraft, Aviation safety, Incorporation by reference, Safety.

**The Proposed Amendment**

Accordingly, under the authority delegated to me by the Administrator, the FAA proposes to amend 14 CFR part 39 as follows:

## PART 39—AIRWORTHINESS DIRECTIVES

1. The authority citation for part 39 continues to read as follows:

**Authority:** 49 U.S.C. 106(g), 40113, 44701.

**§ 39.13 [Amended]**

2. The FAA amends § 39.13 by adding the following new AD:

**Fokker Services B.V.:** Docket No. FAA–2010–0220; Directorate Identifier 2008–NM–166–AD.

**Comments Due Date**

(a) We must receive comments by April 23, 2010.

**Affected ADs**

(b) None.

**Applicability**

(c) This AD applies to Fokker Services B.V. Model F.28 Mark 0070 and Mark 0100 airplanes, certificated in any category, all serial numbers, if an actuator having part number (P/N) 9409122 or (P/N) 53–0013 is installed on one or both fuel crossfeed valves or one or both fuel fire shut-off valves.

**Subject**

(d) Air Transport Association (ATA) of America Code 28 and 76: Fuel and Engine Controls, respectively.

**Reason**

(e) The mandatory continuing airworthiness information (MCAI) consists of three EASA ADs: 2007–0122, dated May 3, 2007 (corrected May 7, 2007); 2009–0116, dated May 29, 2009; and MCAI 2009–0168, dated August 3, 2009. EASA AD 2007–0122 states:

In-service experience revealed that, due to their position on the aircraft, ice may form on actuators P/N 9409122 installed on fuel crossfeed valves and fuel fire shut-off valves. Tests revealed that the ice can prevent the actuator and thus the valve from operating in flight (frozen stuck). A new actuator is being developed by Fokker Services. However, an airworthiness assessment revealed that interim actions are required for actuators

P/N 9409122 installed on fuel crossfeed valves and fuel fire shut-off valves until the new actuators are installed. Fokker Services have issued Service Bulletin (SB) SBF100–28–049 to introduce interim actions that will reduce the probability that fuel crossfeed and fuel fire shut-off valves equipped with actuators p/n 9409122 do not operate due to ice. The interim actions consist of an operational check of the actuators and the application of a grease layer on the actuators, followed by a weekly visual check of the applied grease layer and a 4-weekly operational check of the actuators.

For the reasons stated above, this Airworthiness Directive (AD) requires compliance with instructions contained in the referenced SB. This AD has been re-published to correct typographical errors in the 'Remarks' section, where the word 'Proposed' should have been deleted.

EASA AD 2009–0116 states:

Due to their position on the aeroplane, fuel crossfeed valve actuators P/N 9409122 are susceptible to freezing, which has an adverse effect on the operation of the valve. This condition, if not corrected, may generate fuel asymmetry alerts when a valve remains in the open position after being selected closed. It may also prevent the flight crew from correcting a fuel asymmetry when a valve remains in the closed position after being selected open. One event was reported where, due to such problems, the flight crew shut down an engine in-flight and diverted the aircraft.

Aeroplanes with serial numbers 11244 through 11441 were delivered from the production line with actuators P/N 9401037 ("chimney type") installed. However, on some aeroplanes, these actuators have subsequently been replaced in service with actuators P/N 9409122 (using mounting blocks P/N 7923505) on one or both fuel crossfeed valves. As a result, those aeroplanes are also affected by this unsafe condition.

To address and correct this unsafe condition, EASA issued AD 2008–0126 that required the replacement of all P/N 9409122 fuel crossfeed valve actuators in accordance with Fokker Services SBF100–28–046 with new actuators developed by the manufacturer Eaton Aerospace, P/N 53–0013, which have improved reliability and are less susceptible to freezing.

Following the introduction of actuator P/N 53–0013 in service, Eaton Aerospace reported manufacturing and design errors on actuators with P/N 53–0013. As a result of these errors, the top-cap of the actuator may become loose, possibly leading to actuator failure. Eaton Aerospace has eliminated these problems by introducing a new actuator P/N 53–0027 and Fokker Services have published SBF100–28–061 to introduce these improved actuators on aeroplanes.

As the compliance time of EASA AD 2008–0126 has not yet expired, both P/N 9409122 and P/N 53–0013 fuel crossfeed valve actuators can currently be installed on aeroplanes affected by this AD.

For the reasons described above, this EASA AD retains the requirements of AD 2008–0126, which is superseded, and adds the requirement to install the new P/N 53–0027 actuators. This AD also allows direct installation of P/N 53–0027 on aeroplanes that are still in pre-SBF100–28–046 configuration, provided this is done within the compliance time as established for that SB in AD 2008–0126 and retained by this new AD.

EASA AD 2009–0168 states:

Due to their position on the aeroplane, fuel fire shut-off valve actuators P/N 9409122 are susceptible to freezing, which has an adverse effect on the operation of the valve. Also, due to various causes, the failure rate of actuator P/N 9409122 is higher than expected. Failure or freezing of the actuator may prevent the flight crew to close the fuel fire shut-off valve in case of an engine fire.

Aeroplanes serial numbers 11244 through 11441 were delivered from the production line with actuators P/N 9401037 ("chimney type") installed. However, on some aeroplanes, these actuators have subsequently been replaced in service with actuators P/N 9409122 (using mounting blocks P/N 7923505) on one or both fuel fire shut-off valves. As a result, those aeroplanes are also affected by this unsafe condition.

To address and correct this unsafe condition, EASA issued AD 2008–0193, requiring the replacement of all P/N 9409122 fuel fire shut-off valve actuators with new actuators developed by the manufacturer Eaton Aerospace, P/N 53–0013, which have improved reliability and are less susceptible to freezing.

Following the introduction of actuator P/N 53–0013 in service, Eaton Aerospace reported manufacturing and design errors on actuators with P/N 53–0013. As a result of these errors, the top-cap of the actuator may become loose, possibly leading to actuator failure. Eaton Aerospace has eliminated these problems by introducing a new actuator P/N 53–0027 and Fokker Services have published SBF100–76–020 to introduce these improved actuators on aeroplanes.

As a consequence of EASA AD 2008–0193, both P/N 9409122 and P/N 53–0013 fuel fire shut-off valve actuators are currently installed on aeroplanes affected by this AD.

For the reasons described above, this EASA AD supersedes AD 2008–0193 and requires the installation of new P/N 53–0027 actuators. This AD also prohibits the installation of P/N 53–0013 actuators in accordance with SBF100–76–018 (which has been cancelled), as previously required by EASA AD 2008–0193.

**Compliance**

(f) You are responsible for having the actions required by this AD performed within the compliance times specified, unless the actions have already been done.

**Inspections and Tests for Fuel Crossfeed Valves and Fuel Fire Shut-Off Valves**

(g) For airplanes with an actuator having P/N 9409122 on one or both fuel crossfeed valves or one or both fuel fire shut-off valves: Within 30 days after the effective date of this AD, perform an operational test of, and application of grease on, the left-hand (LH) and right-hand (RH) fuel crossfeed valve actuators and fuel fire shut off valve actuators, in accordance with Part 1 of the Accomplishment Instructions of Fokker Service Bulletin SBF100–28–049, dated April 3, 2007.

(h) For airplanes equipped with an actuator having P/N 9409122 on one or both fuel crossfeed valves or one or both fuel fire shut-off valves: Within 7 days after completion of the actions required by paragraph (g) of this AD, and thereafter at intervals not to exceed 7 days, perform a general visual inspection of the applied grease layer on the LH and RH fuel crossfeed valve actuators and fuel fire shut off valve actuators, in accordance with Part 2 of the Accomplishment Instructions of Fokker Service Bulletin SBF100–28–049, dated April 3, 2007. If the layer of grease on any valve actuator is found to be less than 2 to 3 millimeters, before further flight, reapply grease, in accordance with Part 1 of the Accomplishment Instructions of Fokker Service Bulletin SBF100–28–049, dated April 3, 2007.

(i) For airplanes equipped with an actuator having P/N 9409122 on one or both fuel crossfeed valves or one or both fuel fire shut-off valves: Within 28 days after completion of the actions required by paragraph (g) of this AD, and thereafter at intervals not to exceed 28 days, perform an operational test of the LH and RH fuel crossfeed valve actuators and fuel fire shut off valve actuators, in accordance with Part 3 of the Accomplishment Instructions of Fokker Service Bulletin SBF100–28–049, dated April 3, 2007.

(j) During any of the tests required by paragraphs (g) and (i) of this AD, if a fuel fire shut-off valve actuator fails the operational test, before further flight, do the action specified in paragraph (j)(1) or (j)(2) of this AD.

(1) Do the replacement specified in paragraph (l) of this AD.

(2) Replace the valve actuator with a serviceable part having P/N 9409122, using a method approved by either the Manager, International Branch, ANM–116, Transport Airplane Directorate, FAA; or the European Aviation Safety Agency (or its delegated agent).

**Note 1:** Guidance on replacing the valve actuator with a serviceable part is in the Fokker 70/100 Aircraft Maintenance Manual.

(k) During any of the tests required by paragraphs (g) and (i) of this AD, if a fuel crossfeed valve actuator fails the operational test, before further flight, do the action specified in paragraph (k)(1) or (k)(2) of this AD.

(1) Do the replacement specified in paragraph (o) of this AD.

(2) Replace the valve actuator with a serviceable part having P/N 9409122, using a method approved by either the Manager, International Branch, ANM–116, Transport Airplane Directorate, FAA; or the European Aviation Safety Agency (EASA) (or its delegated agent).

**Note 2:** Guidance on replacing the valve actuator with a serviceable part is in the Fokker 70/100 Aircraft Maintenance Manual.

**Replacement of Fuel Fire Shut-Off Valves**

(l) For airplanes equipped with an actuator having P/N 9409122 on one or both fuel fire

shut-off valves: Except as required by paragraph (j) of this AD, within 15 months after the effective date of this AD, replace each fuel fire shut-off valve actuator having P/N 9409122 with a fuel fire shut-off valve actuator having P/N 53–0027 and accomplish the associated modifications, in accordance with Part 1A or 1B, as applicable, of the Accomplishment Instructions of Fokker Service Bulletin SBF100–76–020, dated April 20, 2009. After installation of fuel fire shut-off valve actuators having P/N 53–0027 on an airplane, the requirements of paragraphs (g), (h), and (i) of this AD no longer apply to the fuel fire shut-off valve actuators installed on that airplane.

(m) For airplanes equipped with an actuator having P/N 53–0013 on one or both fuel fire shut-off valves: Within 15 months after the effective date of this AD, replace each fuel fire shut-off valve actuator having P/N 53–0013 with a fuel fire shut-off valve actuator having P/N 53–0027, in accordance with Part 2 of the Accomplishment Instructions of Fokker Service Bulletin SBF100–76–020, dated April 20, 2009.

(n) As of the effective date of this AD, do not install a fuel fire shut-off valve actuator having P/N 53–0013 on any airplane.

**Replacement of Fuel Crossfeed Valves**

(o) For airplanes equipped with an actuator having P/N 9409122 on one or both fuel crossfeed valves: Do the actions specified in paragraph (o)(1) or (o)(2) of this AD.

(1) Except as specified in paragraph (k)(1) of this AD, within 12 months after the effective date of this AD, replace each fuel crossfeed valve actuator having P/N 9409122 with a fuel crossfeed valve actuator having P/N 53–0013, and before further flight, accomplish the associated modifications, in accordance with the Accomplishment Instructions of Fokker Service Bulletin SBF100–28–046, dated March 27, 2008; and do the replacement required by paragraph (p) of this AD at the time specified in paragraph (p) of this AD. After installing fuel crossfeed valve actuators having P/N 53–0013 on an airplane, the requirements of paragraphs (g), (h), and (i) of this AD no longer apply to the fuel crossfeed valve actuators installed on that airplane.

(2) Within 12 months after the effective date of this AD, replace each fuel crossfeed valve actuator having P/N 9409122 with a fuel crossfeed valve actuator having P/N 53–0027, in accordance with Part 1A or 1B, as applicable, of the Accomplishment Instructions of Fokker Service Bulletin SBF100–28–061, dated April 20, 2009. After installing fuel crossfeed valve actuators having P/N 53–0027 on an airplane, the requirements of paragraphs (g), (h), and (i) of this AD no longer apply to the fuel crossfeed valve actuators installed on that airplane.

(p) For airplanes equipped with an actuator having P/N 53–0013 on one or both fuel crossfeed valves: Within 18 months after the effective date of this AD, replace each fuel crossfeed valve actuator having P/N 53–0013 with a fuel crossfeed valve actuator having P/N 53–0027, in accordance with Part 2 of the Accomplishment Instructions of Fokker Service Bulletin SBF100–28–061, dated April 20, 2009. After installing fuel crossfeed valve actuators having P/N 53–0027 on an airplane, the requirements of paragraphs (g), (h), and (i) of this AD no longer apply to the fuel crossfeed valve actuators installed on that airplane.

(q) After accomplishing the actions specified in paragraph (p) of this AD, do not install any fuel crossfeed valve actuator having P/N 53–0013 on any airplane.

**FAA AD Differences**

**Note 3:** This AD differs from the MCAI and/or service information as follows: Although paragraph (5) of EASA AD 2007–0122, dated May 3, 2007, allows operating the airplane in accordance with the Master Minimum Equipment List (MMEL) Item 28–23–1 of MMEL Fokker 70/MMEL Fokker 100, paragraph (l) of this AD requires replacing affected valves before further flight.

**Other FAA AD Provisions**

(r) The following provisions also apply to this AD:

(1) *Alternative Methods of Compliance (AMOCs):* The Manager, International Branch, ANM–116, Transport Airplane Directorate, FAA, has the authority to approve AMOCs for this AD, if requested using the procedures found in 14 CFR 39.19. Send information to ATTN: Tom Rodriguez, Aerospace Engineer, International Branch, ANM–116, Transport Airplane Directorate, FAA, 1601 Lind Avenue SW., Renton, Washington 98057–3356; telephone (425) 227–1137; fax (425) 227–1149. Before using any approved AMOC on any airplane to which the AMOC applies, notify your principal maintenance inspector (PMI) or principal avionics inspector (PAI), as appropriate, or lacking a principal inspector, your local Flight Standards District Office.

(2) *Airworthy Product:* For any requirement in this AD to obtain corrective actions from a manufacturer or other source, use these actions if they are FAA-approved. Corrective actions are considered FAA-approved if they are approved by the State of Design Authority (or their delegated agent). You are required to assure the product is airworthy before it is returned to service.

(3) *Reporting Requirements:* For any reporting requirement in this AD, under the provisions of the Paperwork Reduction Act (44 U.S.C. 3501 *et seq.*), the Office of Management and Budget (OMB) has approved the information collection requirements and has assigned OMB Control Number 2120–0056.

**Related Information**

(s) Refer to MCAI European Aviation Safety Agency Airworthiness Directives: 2009–0168, dated August 3, 2009, 2009–0116, dated May 29, 2009, and 2007–0122, dated May 3, 2007 (corrected May 7, 2007); and the Fokker service bulletins specified in Table 1 of this AD; for related information.

TABLE 1—RELATED SERVICE INFORMATION

| Fokker Service Bulletin— | Dated— |
|---|---|
| Fokker SBF100–28–046, including the drawings identified in the subsequent table, "Table—Drawings Included in Fokker Service Bulletin SBF100–28–046". | March 27, 2008. |
| SBF100–28–049 | April 3, 2007. |
| Fokker SBF100–28–061, including the drawings identified in the subsequent table, "Table—Drawings Included in Fokker Service Bulletin SBF100–28–061". | April 20, 2009. |
| Fokker SBF100–76–020, including the drawings identified in the subsequent table, "Table—Drawings Included in Fokker Service Bulletin SBF100–76–020". | April 20, 2009. |

Issued in Renton, Washington, on March 2, 2010.

**Suzanne Masterson,**

*Acting Manager, Transport Airplane Directorate, Aircraft Certification Service.*

[FR Doc. 2010–5013 Filed 3–8–10; 8:45 am]

**BILLING CODE 4910–13–P**

**DEPARTMENT OF TRANSPORTATION**

**Federal Aviation Administration**

**14 CFR Part 39**

**[Docket No. FAA–2008–0909; Directorate Identifier 2007–NM–363–AD]**

**RIN 2120–AA64**

## Airworthiness Directives; BAE SYSTEMS (Operations) Limited Model BAe 146 Airplanes and Model Avro 146–RJ Airplanes

**AGENCY:** Federal Aviation Administration (FAA), Department of Transportation (DOT).

**ACTION:** Supplemental notice of proposed rulemaking (NPRM); reopening of comment period.

**SUMMARY:** The FAA is revising an earlier NPRM for an airworthiness directive (AD) that applies to all Model BAe 146 airplanes and Model Avro 146–RJ airplanes. The original NPRM would have superseded an existing AD that currently requires revising the Airworthiness Limitations Section (ALS) of the Instructions for Continued Airworthiness to incorporate life limits for certain items and inspections to detect fatigue cracking in certain structures. The original NPRM proposed to require incorporating new and more restrictive life limits for certain items and for certain inspections to detect fatigue cracking in certain structures. The original NPRM resulted from issuance of a later revision to the airworthiness limitations. This new action revises the original NPRM by proposing to require revisions to the airworthiness limitations to include Critical Design Configuration Control Limitations for the fuel system. We are proposing this supplemental NPRM to ensure that fatigue cracking of certain structural elements is detected and corrected, and to prevent ignition sources in the fuel tanks; fatigue cracking of certain structural elements could adversely affect the structural integrity of these airplanes.

**DATES:** We must receive comments on this supplemental NPRM by April 5, 2010.

**ADDRESSES:** You may send comments by any of the following methods:

- *Federal eRulemaking Portal:* Go to *http://www.regulations.gov.* Follow the instructions for submitting comments.
- *Fax:* 202–493–2251.
- *Mail:* U.S. Department of Transportation, Docket Operations, M–30, West Building Ground Floor, Room W12–140, 1200 New Jersey Avenue, SE., Washington, DC 20590.
- *Hand Delivery:* U.S. Department of Transportation, Docket Operations, M–30, West Building Ground Floor, Room W12–140, 1200 New Jersey Avenue, SE., Washington, DC 20590, between 9 a.m. and 5 p.m., Monday through Friday, except Federal holidays.

For service information identified in this AD, contact BAE Regional Aircraft, 13850 McLearen Road, Herndon, Virginia 20171; telephone 703–736–1080; e-mail *raebusiness@baesystems.com;* Internet *http://www.baesystems.com/Businesses/RegionalAircraft/index.htm.* You may review copies of the referenced service information at the FAA, Transport Airplane Directorate, 1601 Lind Avenue, SW., Renton, Washington. For information on the availability of this material at the FAA, call 425–227–1221 or 425–227–1152.

### Examining the AD Docket

You may examine the AD docket on the Internet at *http://www.regulations.gov;* or in person at the Docket Management Facility between 9 a.m. and 5 p.m., Monday through Friday, except Federal holidays. The AD docket contains this proposed AD, the regulatory evaluation, any comments received, and other information. The street address for the Docket Office (telephone 800–647–5527) is in the **ADDRESSES** section. Comments will be available in the AD docket shortly after receipt.

**FOR FURTHER INFORMATION CONTACT:** Todd Thompson, Aerospace Engineer, International Branch, ANM–116, FAA, Transport Airplane Directorate, 1601 Lind Avenue, SW., Renton, Washington 98057–4056; telephone (425) 227–1175; fax (425) 227–1149.

**SUPPLEMENTARY INFORMATION:**

### Comments Invited

We invite you to send any written relevant data, views, or arguments about this proposed AD. Send your comments to an address listed under the **ADDRESSES** section. Include "Docket No. FAA–2008–0909; Directorate Identifier 2007–NM–363–AD" at the beginning of your comments. We specifically invite comments on the overall regulatory, economic, environmental, and energy aspects of this proposed AD. We will consider all comments received by the closing date and may amend this proposed AD because of those comments.

We will post all comments we receive, without change, to *http://www.regulations.gov,* including any personal information you provide. We will also post a report summarizing each substantive verbal contact we receive about this proposed AD.

### Discussion

The FAA issued a notice of proposed rulemaking (NPRM) (the "original NPRM") to amend 14 CFR part 39 to include an AD that supersedes AD 2005–23–12, amendment 39–14370 (70 FR 70483, November 22, 2005). The existing AD applies to all BAE SYSTEMS (Operations) Limited Model BAe 146 airplanes and Model Avro 146–RJ airplanes. The original NPRM was published in the **Federal Register** on August 26, 2008 (73 FR 50248). The original NPRM proposed to supersede the existing AD to continue to require revising the Airworthiness Limitations Section (ALS) of the Instructions for Continued Airworthiness to incorporate life limits for certain items and inspections to detect fatigue cracking in certain structures. The original NPRM also proposed to require revising the ALS of the Instructions for Continued Airworthiness to incorporate new and more restrictive life limits for certain items and new and more restrictive inspections to detect fatigue cracking in certain structures.

### Actions Since Original NPRM Was Issued

Since we issued the original NPRM, the European Aviation Safety Agency (EASA), which is the Technical Agent for the Member States of the European Community, has issued EASA Airworthiness Directive (AD) 2009–0215, dated October 7, 2009. That EASA AD supersedes EASA AD 2009–0020, dated February 5, 2009, which superseded EASA AD 2008–0132, dated July 16, 2008; EASA AD 2008–0132 superseded EASA AD 2007–0271, dated October 16, 2007. That EASA AD was referenced in the original NPRM.

EASA AD 2008–0132, dated July 16, 2008, states that a new sub-chapter, 05–15–00, has been issued for the BAE SYSTEMS (Operations) Limited BAe 146 Series/Avro146–RJ Series Aircraft Maintenance Manual (AMM). Sub-chapter 05–15–00 is titled "Critical Design Configuration Control Limitations (CDCCL)—Fuel System Description and Operation."

In addition, EASA AD 2009–0020, dated February 5, 2009, states that Sub-chapter 05–20–00, titled "Scheduled Maintenance," now includes references to the following BAE SYSTEMS (Operations) Limited BAe146 Series/Avro146–RJ Series support documents: Maintenance Review Board Report (MRBR), Corrosion Prevention and Control Program (CPCP), and Supplemental Structural Inspection

Document (SSID). We have included Notes 2, 3, 4, and 5 of this supplemental NPRM to refer to the sub-chapters and related support documents.

In addition, we have revised paragraph (h) of this supplemental NPRM (paragraph (g) of the original NPRM) to remove reference to Section 05–10 and 05–20 of Chapter 5 of the BAE SYSTEMS (Operations) Limited BAe146 Series/Avro146–RJ Series AMM. However, we have provided references to certain sub-chapters of Chapter 5 of the BAE SYSTEMS (Operations) Limited BAe146 Series/Avro146–RJ Series AMM as a source of information for complying with the proposed requirements of paragraph (h) of this supplemental NPRM.

Also, we have revised paragraph (h) of this supplemental NPRM (paragraph (g) of the original NPRM) to refer to "Chapter 5 of the BAE SYSTEMS (Operations) Limited BAe146 Series/Avro146–RJ Series Aircraft Maintenance Manual," instead of "the ALS of the Instructions for Continued Airworthiness" as it was referred to in the original NPRM.

We have also added new paragraph (d) to this supplemental NPRM to specify the Air Transport Association (ATA) of America code identifying the subject, and re-identified the subsequent paragraphs accordingly.

**Relevant Service Information**

BAE SYSTEMS (Operations) Limited has issued Revision 97, dated July 15, 2009, to Sections 05–10, 05–15, and 05–20 of the BAE SYSTEMS (Operations) Limited BAe146 Series/Avro146–RJ Series AMM, which includes the CDCCLs. The CDCCLs provide instructions to retain critical ignition source prevention features during configuration changes that may be caused by modification, repair, or maintenance actions.

Messier-Dowty has issued Service Bulletin 146–32–171, dated August 11, 2009, which is an optional action to extend the life limits of the main landing gear. We have added paragraph (j) to this supplemental NPRM to specify doing the service bulletin for extending the life limits of the main landing gear main fitting from 32,000 landings to 50,000 landings on the main fitting, and re-identified the subsequent paragraphs accordingly.

The EASA mandated the service information and issued Airworthiness Directive 2009–0215, dated October 7, 2009, to ensure the continued airworthiness of these airplanes in the European Union.

**Comments**

We gave the public the opportunity to participate in developing this AD. We received no comments on the NPRM or on the determination of the cost to the public.

**FAA's Determination and Proposed Requirements of the Supplemental NPRM**

Some of the changes discussed above expand the scope of the original NPRM; therefore, we have determined that it is necessary to reopen the comment period to provide additional opportunity for public comment on this supplemental NPRM.

**Explanation of Change to Costs of Compliance**

Since issuance of the original NPRM, we have increased the labor rate used in the Costs of Compliance from $80 per work-hour to $85 per work-hour. The Costs of Compliance information, below, reflects this increase in the specified hourly labor rate.

**Costs of Compliance**

The following table provides the estimated costs for U.S. operators to comply with this proposed AD.

ESTIMATED COSTS

| Action | Work hours | Average labor rate per hour | Parts | Cost per airplane | Number of U.S.-registered airplanes | Fleet cost |
|---|---|---|---|---|---|---|
| ALS Revision (required by AD 2005–23–12) ..... | 1 | $85 | None ..... | $85 | 1 | $85 |
| ALS Revision (new proposed action) ..... | 1 | 85 | None ..... | 85 | 1 | 85 |

**Authority for This Rulemaking**

Title 49 of the United States Code specifies the FAA's authority to issue rules on aviation safety. Subtitle I, Section 106, describes the authority of the FAA Administrator. Subtitle VII, Aviation Programs, describes in more detail the scope of the Agency's authority.

We are issuing this rulemaking under the authority described in Subtitle VII, Part A, Subpart III, Section 44701, "General requirements." Under that section, Congress charges the FAA with promoting safe flight of civil aircraft in air commerce by prescribing regulations for practices, methods, and procedures the Administrator finds necessary for safety in air commerce. This regulation is within the scope of that authority because it addresses an unsafe condition that is likely to exist or develop on products identified in this rulemaking action.

**Regulatory Findings**

We have determined that this proposed AD would not have federalism implications under Executive Order 13132. This proposed AD would not have a substantial direct effect on the States, on the relationship between the national Government and the States, or on the distribution of power and responsibilities among the various levels of government.

For the reasons discussed above, I certify that the proposed regulation:

1. Is not a "significant regulatory action" under Executive Order 12866;

2. Is not a "significant rule" under the DOT Regulatory Policies and Procedures (44 FR 11034, February 26, 1979); and

3. Will not have a significant economic impact, positive or negative, on a substantial number of small entities under the criteria of the Regulatory Flexibility Act.

We prepared a regulatory evaluation of the estimated costs to comply with this supplemental NPRM and placed it in the AD docket. See the **ADDRESSES** section for a location to examine the regulatory evaluation.

**List of Subjects in 14 CFR Part 39**

Air transportation, Aircraft, Aviation safety, Incorporation by reference, Safety.

**The Proposed Amendment**

Accordingly, under the authority delegated to me by the Administrator, the FAA proposes to amend 14 CFR part 39 as follows:

## PART 39—AIRWORTHINESS DIRECTIVES

1. The authority citation for part 39 continues to read as follows:

**Authority:** 49 U.S.C. 106(g), 40113, 44701.

**§ 39.13 [Amended]**

2. The Federal Aviation Administration (FAA) amends § 39.13 by removing amendment 39–14370 (70 FR 70483, November 22, 2005) and adding the following new airworthiness directive (AD):

**BAE SYSTEMS (Operations) Limited:** Docket No. FAA–2008–0909; Directorate Identifier 2007–NM–363–AD.

**Comments Due Date**

(a) The FAA must receive comments on this AD action by April 5, 2010.

**Affected ADs**

(b) This AD supersedes AD 2005–23–12, amendment 39–14370.

**Applicability**

(c) This AD applies to all BAE SYSTEMS (Operations) Limited Model BAe 146–100A, –200A, and –300A series airplanes; and Model Avro 146–RJ70A, 146–RJ85A, and 146–RJ100A airplanes; certificated in any category.

**Note 1:** This AD requires revisions to certain operator maintenance documents to include new inspections. Compliance with these inspections is required by 14 CFR 91.403(c). For airplanes that have been previously modified, altered, or repaired in the areas addressed by these inspections, the operator may not be able to accomplish the inspections described in the revisions. In this situation, to comply with 14 CFR 91.403(c), the operator must request approval for an alternative method of compliance (AMOC) according to paragraph (k) of this AD. The request should include a description of changes to the required inspections that will ensure the continued operational safety of the airplane.

**Subject**

(d) Air Transport Association (ATA) of America Code 05.

**Unsafe Condition**

(e) This AD results from issuance of a later revision to the airworthiness limitations of the BAE SYSTEMS (Operations) Limited BAe146 Series/Avro146–RJ Series Aircraft Maintenance Manual (AMM), which specifies new inspections and compliance times for inspection and replacement actions. We are issuing this AD to ensure that fatigue cracking of certain structural elements is detected and corrected, and to prevent ignition sources in the fuel tanks; fatigue cracking of certain structural elements could adversely affect the structural integrity of these airplanes.

**Compliance**

(f) You are responsible for having the actions required by this AD performed within the compliance times specified, unless the actions have already been done.

**Restatement of Certain Requirements of AD 2005–23–12**

*Airworthiness Limitations Revision*

(g) Within 30 days after December 27, 2005 (the effective date of AD 2005–23–12), revise the Airworthiness Limitations Section (ALS) of the Instructions for Continued Airworthiness to incorporate new and more restrictive life limits for certain items and new and more restrictive inspections to detect fatigue cracking in certain structures, in accordance with a method approved by the Manager, International Branch, ANM–116, Transport Airplane Directorate, FAA; or the Civil Aviation Authority (or its delegated agent).

**New Requirements of This AD**

*New Airworthiness Limitations Revisions*

(h) Within 90 days after the effective date of this AD, revise Chapter 5 of the BAE SYSTEMS (Operations) Limited BAe146 Series/Avro146–RJ Series AMM to incorporate new and more restrictive life limits for certain items and new and more restrictive inspections to detect fatigue cracking in certain structures, and to add fuel system Critical Design Configuration Control Limitations (CDCCL) to prevent ignition sources in the fuel tanks, in accordance with a method approved by the Manager, International Branch, ANM–116, Transport Airplane Directorate, FAA; or the European Aviation Safety Agency (EASA) (or its delegated agent). Incorporating the new and more restrictive life limits and inspections into the ALS terminates the requirements of paragraph (g) of this AD, and after incorporation has been done, the limitations required by paragraph (g) of this AD may be removed from the ALS.

**Note 2:** Guidance on revising Chapter 5 of the BAE SYSTEMS (Operations) Limited BAe146 Series/Avro146–RJ Series AMM, Revision 97, dated July 15, 2009, can be found in the applicable subchapters listed in Table 1 of this AD.

TABLE 1—APPLICABLE AMM SUB-CHAPTERS

| AMM sub-chapter | Subject |
|---|---|
| 05–10–01 | Airframe Airworthiness Limitations before Life Extension Programme. |
| 05–10–05 [1] | Airframe Airworthiness Limitations, Life Extension Programme Landings Life Extended. |
| 05–10–10 [2] | Airframe Airworthiness Limitations, Life Extension Programme Calendar Life Extended. |
| 05–10–15 | Aircraft Equipment Airworthiness Limitations. |
| 05–10–17 | Power Plant Airworthiness Limitations. |
| 05–15–00 | Critical Design Configuration Control Limitations (CDCCL)—Fuel System Description and Operation. |
| 05–20–00 [3] | Scheduled Maintenance. |
| 05–20–01 | Airframe Scheduled Maintenance—Before Life Extension Programme. |
| 05–20–05 [1] | Airframe Scheduled Maintenance—Life Extension Programme Landings Life Extended. |
| 05–20–10 [2] | Airframe Scheduled Maintenance—Life Extension Programme Calendar Life Extended. |
| 05–20–15 | Aircraft Equipment Scheduled Maintenance. |

[1] Applicable only to aircraft post-modification HCM20011A or HCM20012A or HCM20013A.
[2] Applicable only to aircraft post-modification HCM20010A.
[3] Paragraphs 5 and 6 only, on the Corrosion Prevention and Control Program (CPCP) and the Supplemental Structural Inspection Document (SSID).

**Note 3:** Sub-chapter 05–15–00 of the BAE SYSTEMS (Operations) Limited BAe146 Series/Avro146–RJ Series AMM, is the CDCCL.

**Note 4:** Within Sub-chapter 05–20–00 of the BAE SYSTEMS (Operations) Limited BAe146 Series/Avro146–RJ Series AMM, the relevant issues of the support documents are as follows: BAE SYSTEMS (Operations) Limited BAe 146 Series/Avro 146–RJ Corrosion Prevention and Control Program Document CPCP–146–01, Revision 3, dated July 15, 2008, including BAE SYSTEMS (Operations) Limited Temporary Revision (TR) 2.1, dated December 2008; and BAE SYSTEMS (Operations) Limited BAe146 Series Supplemental Structural Inspection Document SSID–146–01, Revision 1, dated June 15, 2009.

**Note 5:** Within Sub-chapter 05–20–01 of the BAE SYSTEMS (Operations) Limited BAe146 Series/Avro146–RJ Series AMM, the relevant issue of BAE SYSTEMS (Operations) Limited BAe 146/Avro 146–RJ Maintenance Review Board Report Document MRB 146–01, Issue 2, is Revision 15, dated March 2009 (mis-identified in EASA AD 2009–0215, dated October 7, 2009, as being dated May 2009).

**Note 6:** Notwithstanding any other maintenance or operational requirements, components that have been identified as airworthy or installed on the affected airplanes before the revision of the ALS, as required by paragraphs (g) of this AD; or before revision of Chapter 5 of the AMM, as required by paragraph (h) of this AD; do not need to be reworked in accordance with the CDCCLs. However, once the ALS or AMM

has been revised, future maintenance actions on these components must be done in accordance with the CDCCLs.

(i) Except as specified in paragraph (k) of this AD: After the actions specified in paragraph (g) or (h) of this AD have been accomplished, no alternative inspections or inspection intervals may be approved for the structural elements specified in the documents listed in paragraph (g) or (h) of this AD.

(j) Modifying the main fittings of the main landing gear in accordance with Messier-Dowty Service Bulletin 146–32–171, dated August 11, 2009, extends the safe limit of the main landing gear main fitting from 32,000 landings to 50,000 landings on the main fitting.

*Alternative Methods of Compliance (AMOCs)*

(k) The Manager, International Branch, ANM–116, Transport Airplane Directorate, FAA, has the authority to approve AMOCs for this AD, if requested using the procedures found in 14 CFR 39.19. Send information to ATTN: Todd Thompson, Aerospace Engineer, International Branch, ANM–116, FAA, Transport Airplane Directorate, 1601 Lind Avenue, SW., Renton, Washington 98057–4056; telephone (425) 227–1175; fax (425) 227–1149. Before using any approved AMOC on any airplane to which the AMOC applies, notify your principal maintenance inspector (PMI) or principal avionics inspector (PAI), as appropriate, or lacking a principal inspector, your local Flight Standards District Office. The AMOC approval letter must specifically reference this AD.

*Related Information*

(l) EASA Airworthiness Directive 2009–0215, dated October 7, 2009; and Messier-Dowty Service Bulletin 146–32–171, dated August 11, 2009; also address the subject of this AD.

Issued in Renton, Washington, on March 2, 2010.

**Suzanne Masterson,**

*Acting Manager, Transport Airplane Directorate, Aircraft Certification Service.*

[FR Doc. 2010–5016 Filed 3–8–10; 8:45 am]

**BILLING CODE 4910–13–P**

## DEPARTMENT OF COMMERCE

### Bureau of Economic Analysis

### 15 CFR Part 801

**[Docket No. 0908131235–0060–01]**

**RIN 0691–AA73**

## International Services Surveys: BE–180, Benchmark Survey of Financial Services Transactions Between U.S. Financial Services Providers and Foreign Persons

**AGENCY:** Bureau of Economic Analysis, Commerce.

**ACTION:** Notice of proposed rulemaking.

**SUMMARY:** This proposed rule would amend regulations of the Bureau of Economic Analysis, Department of Commerce (BEA) to set forth the reporting requirements for the BE–180, Benchmark Survey of Financial Services Transactions between U.S. Financial Services Providers and Foreign Persons. The BE–180 would replace a similar but more limited survey, the BE–80, Benchmark Survey of Financial Services Transactions Between U.S. Financial Services Providers and Unaffiliated Foreign Persons. The agency form number and survey title are being changed because the survey would include the collection of data on transactions with affiliated foreigners and unaffiliated foreigners using the same survey instrument. If adopted the BE–180 survey would be conducted once every five years beginning with fiscal year 2009.

The proposed BE–180 survey is intended to cover financial services transactions with foreign persons. In nonbenchmark years, the universe estimates covering these transactions would be derived from the sample data reported on BEA's follow-on survey (BE–185, Quarterly Survey of Financial Services Transactions between U.S. Financial Services Providers and Foreign Persons).

The data will be used by BEA to estimate the financial services component of the U.S. International Transactions Accounts and other economic accounts compiled by BEA. The data also are needed by the government to monitor U.S. exports and imports of financial services; analyze their impact on the U.S. and foreign economies; support U.S. international trade policy on financial services; and assess and promote U.S. competitiveness in international trade in services. In addition, they will improve the ability of U.S. businesses to identify and evaluate market opportunities.

**DATES:** Comments on this proposed rule will receive consideration if submitted in writing on or before 5 p.m. May 10, 2010.

**ADDRESSES:** You may submit comments by any of the following methods:

- *Federal eRulemaking Portal: http://www.regulations.gov.* Follow the instructions for submitting comments. For agency, select "Commerce Department—all."
- *E-mail: Christopher.Emond@bea.gov.*
- *Fax:* Chris Emond, Chief, Special Surveys Branch, (202) 606–5318.
- *Mail:* Chris Emond, Chief, Special Surveys Branch, Balance of Payments Division, U.S. Department of Commerce, Bureau of Economic Analysis, BE–50, Washington, DC 20230.
- *Hand Delivery/Courier:* Chris Emond, Chief, Special Surveys Branch, Balance of Payments Division, U.S. Department of Commerce, Bureau of Economic Analysis, BE–50, Shipping and Receiving Section, M100, 1441 L Street, NW., Washington, DC 20005.

Please include in your comment a reference to RIN 0691–AA73 in the subject line. Written comments regarding the burden-hour estimates or other aspects of the collection-of-information requirements contained in the proposed rule should be sent both to BEA, through any of the methods listed above, and to the Office of Management and Budget, O.I.R.A., Paperwork Reduction Project, Attention PRA Desk Officer for BEA, via e-mail at *pbugg@omb.eop.gov,* or by FAX at 202–395–7245.

*Public Inspection:* All comments received are a part of the public record and will generally be posted to *http://www.regulations.gov* without change. All personal identifying information (for example, name, address, *etc.*) voluntarily submitted by the commentator may be publicly accessible. Do not submit confidential business information or otherwise sensitive or protected information. BEA will accept anonymous comments.

**FOR FURTHER INFORMATION CONTACT:** Chris Emond, Chief, Special Surveys Branch, Balance of Payments Division (BE–50), Bureau of Economic Analysis, U.S. DOC, Washington, DC 20230; e-mail *Christopher.Emond@bea.gov;* or phone (202) 606–9826.

**SUPPLEMENTARY INFORMATION:** This proposed rule would amend 15 CFR Part 801 to set forth the reporting requirements for the BE–180, Benchmark Survey of Financial Services Transactions between U.S. Financial Services Providers and Foreign Persons. The BE–180 would replace a similar but more limited survey, the BE–80, Benchmark Survey of Financial Services Transactions Between U.S. Financial Services Providers and Unaffiliated Foreign Persons, and would include the collection of data on transactions with affiliated foreigners and unaffiliated foreigners. The proposed BE–180 survey is intended to cover financial services transactions with foreign persons. In nonbenchmark years, the universe estimates covering these transactions would be derived from the sample data reported on BEA's follow-on survey (BE–185, Quarterly Survey of Financial Services Transactions between U.S.

Financial Services Providers and Foreign Persons).

The survey would be mandatory for those U.S. financial companies that engage in the covered transactions in amounts that exceed the exemption level. The Department of Commerce, as part of its continuing effort to reduce paperwork and respondents burden, invites the general public and other Federal agencies to comment on proposed and/or continuing information collections, as required by the Paperwork Reduction Act of 1995.

The survey as described in this rule would be conducted by BEA every five years, with the first survey covering fiscal year 2009, under the authority provided by the International Investment and Trade in Services Survey Act (22 U.S.C. 3101–3108), hereinafter, "the Act," and by Section 5408 of the Omnibus Trade and Competitiveness Act of 1988. If this proposed rule is implemented, BEA would send the survey to potential respondents in June of 2010; responses would be due by August 31, 2010.

The services covered by the BE–180 would include the following transactions: (1) Brokerage services related to equity transactions, and (2) other brokerage services; (3) underwriting and private placement services; (4) financial management services; (5) credit-related services, except credit card services, and (6) credit card services; (7) financial advisory and custody services; (8) securities lending services; (9) electronic funds transfer services; and (10) other financial services. The exemption level for the proposed survey is total sales or purchases of $3 million during the reporting period, for the ten categories listed above. Financial companies that exceed this threshold must supply data on the amount of their financial transactions for each category, disaggregated by country and by its relationship to the foreign transactor (foreign affiliate, foreign parent group, or unaffiliated). In addition, this survey would collect subcomponents of financial management receipts at the global level.

U.S. financial companies that are exempt from the survey's reporting requirements because they do not meet the reporting threshold are requested to provide, on a voluntary basis, estimates of their covered financial services transactions. Any U.S. financial company that receives the BE–180 survey form from BEA, but does not report data because it is exempt under the regulations, must file an exemption claim by completing pages one through five of the survey. This requirement is necessary to ensure efficient administration of the Act by eliminating unnecessary follow-up contact. If a U.S. financial company does not receive the BE–180 survey form and is not otherwise required to report under these regulations, then the company is not required to take any action.

BEA maintains a continuing dialogue with respondents and with data users, including its own internal users, to ensure that, as far as possible, the required data serve their intended purposes and are available from the existing records, that instructions are clear, and that unreasonable burdens are not imposed. In reaching decisions on questions to include in the survey, BEA considered the Government's need for the data, the burden imposed on respondents, the quality of the likely responses (for example, whether the data are available on respondents' books), and BEA's experience in previous benchmark, annual, and quarterly surveys.

**Survey Background**

The Bureau of Economic Analysis (BEA), U.S. Department of Commerce, would conduct the survey under the International Investment and Trade in Services Survey Act (22 U.S.C. 3101–3108), and Section 5408 of the Omnibus Trade and Competitiveness Act of 1988. Section 4(a) of the Act (22 U.S.C. 3103(a)) provides that the President shall, to the extent he deems necessary and feasible, conduct a regular data collection program to secure current information related to international investment and trade in services and publish for the use of the general public and United States Government agencies periodic, regular, and comprehensive statistical information collected pursuant to this subsection.

In Section 3 of Executive Order 11961, as amended by Executive Orders 12318 and 12518, the President delegated the responsibilities under the Act for performing functions concerning international trade in services to the Secretary of Commerce, who has redelegated them to BEA.

Data from the proposed survey are needed to monitor U.S. exports and imports of financial services; analyze their impact on the U.S. and foreign economies; compile and improve the U.S. international transactions, national income and product, and input-output accounts; support U.S. international trade policy on financial services; assess and promote U.S. competitiveness in international trade in services; and improve the ability of U.S. businesses to identify and evaluate market opportunities.

**Executive Order 12866**

This proposed rule has been determined to be not significant for purposes of E.O. 12866.

**Executive Order 13132**

This proposed rule does not contain policies with Federalism implications sufficient to warrant preparation of a Federalism Assessment under E.O. 13132.

**Paperwork Reduction Act**

This proposed rule contains a collection-of-information requirement subject to review and approval by the Office of Management and Budget (OMB) under the Paperwork Reduction Act. The requirement will be submitted to OMB as a request to reinstate with change a previously approved collection for which approval has expired under OMB Control Number 0608–0062.

Notwithstanding any other provisions of the law, no person is required to respond to, nor shall any person be subject to a penalty for failure to comply with, a collection of information subject to the requirements of the Paperwork Reduction Act unless that collection displays a currently valid Office of Management and Budget Control Number.

The benchmark survey, as proposed, is expected to result in the filing of reports from approximately 8,000 respondents. Approximately 1,000 respondents would report mandatory or voluntary data on the survey and approximately 7,000 would file exemption claims. The respondent burden for this collection of information would vary from one respondent to another, but is estimated to average ten hours, including time for reviewing the instructions, searching existing data sources, gathering and maintaining the data needed, and completing and reviewing the collection of information for the respondents that file mandatory or voluntary data and two hours for other responses. Thus, the total respondent burden for the survey is estimated at 24,000 hours.

Comments are requested concerning: (a) Whether the proposed collection of information is necessary for the proper performance of the functions of the agency, including whether the information will have practical utility; (b) the accuracy of the burden estimate; (c) ways to enhance the quality, utility, and clarity of the information collected; and (d) ways to minimize the burden of the collection of information on the respondents, including the use of automated collection techniques or other forms of information technology.

Written comments regarding the burden-hour estimates or other aspects of the collection-of-information requirements contained in the proposed rule should be sent both to BEA, through any of the methods listed above, and to the Office of Management and Budget, O.I.R.A., Paperwork Reduction Project, Attention PRA Desk Officer for BEA, via e-mail at *pbugg@omb.eop.gov,* or by FAX at 202–395–7245.

**Regulatory Flexibility Act**

The Chief Counsel for Regulation, Department of Commerce, has certified to the Chief Counsel for Advocacy, Small Business Administration, under provisions of the Regulatory Flexibility Act (5 U.S.C. 605(b)), that this proposed rulemaking, if adopted, will not have a significant economic impact on a substantial number of small entities. While the survey does not collect data on total sales or other measures of the overall size of the businesses that respond to the survey, historically the respondents to the existing quarterly survey of financial services transactions and to the previous benchmark surveys have been comprised mainly of major U.S. corporations. The proposed benchmark survey will be required from U.S. financial companies whose sales or purchases of the covered financial services with foreign persons exceeded $3 million for fiscal year 2009. This exemption level will exclude most small businesses from mandatory coverage. Any small businesses that may be required to report would likely have engaged in only a few covered transactions and so the burden on them would be relatively small.

**List of Subjects in 15 CFR Part 801**

International transactions, Economic statistics, Foreign trade, Penalties, Reporting and recordkeeping requirements.

Dated: January 12, 2010.

**J. Steven Landefeld,**

*Director, Bureau of Economic Analysis.*

For the reasons set forth in the preamble, BEA proposes to amend 15 CFR Part 801, as follows:

## PART 801—SURVEY OF INTERNATIONAL TRADE IN SERVICES BETWEEN U.S. AND FOREIGN PERSONS

1. The authority citation for 15 CFR Part 801 continues to read as follows:

**Authority:** 5 U.S.C. 301; 15 U.S.C. 4908; 22 U.S.C. 3101–3108; and E.O. 11961, 3 CFR, 1977 Comp., p. 86, as amended by E.O. 12318, 3 CFR, 1981 Comp., p. 173, and E.O. 12518, 3 CFR, 1985 Comp., p 348.

2. Amend § 801.9 by revising paragraph (a) to read as follows:

**§ 801.9 Reports required.**

(a) *Benchmark surveys.* Section 4(a)(4) of the Act (22 U.S.C. 3103) provides that benchmark surveys of trade in services between U.S. and foreign persons be conducted, but not more frequently than every 5 years. General reporting requirements, exemption levels, and the years of coverage for the BE–120 survey may be found in § 801.10: General reporting requirements, exemption levels, and the years of coverage for the BE–140 survey may be found in § 801.11: More detailed instructions are given on the forms themselves; and general reporting requirements, exemption levels, and the years for coverage for the BE–180 survey may be found in § 801.12:

* * * * *

**§ 801.11 [Removed]**

3. Remove § 801.11.

**§ 801.12 [Redesignated as § 801.11]**

4. Redesignate § 801.12 as § 801.11.

5. Add section 801.12 to read as follows:

**§ 801.12 Rules and regulations for the BE–180, Benchmark Survey of Financial Services Transactions between U.S. Financial Services Providers and Foreign Persons.**

(a) The BE–180, Benchmark Survey of Financial Services Transactions between U.S. Financial Services Providers and Foreign Persons, will be conducted beginning with fiscal year 2009 and every fifth year thereafter. More detailed instructions are given on the report forms and instructions.

(b) *Who must report—(1) Mandatory reporting.* A report is required from each U.S. person that is a financial services provider or intermediary, or whose consolidated U.S. enterprise includes a separately organized subsidiary, or part, that is a financial services provider or intermediary, and that had transactions (either sales or purchases) directly with foreign persons in all financial services combined in excess of $3,000,000 during its fiscal year covered by the survey on an accrual basis. The $3,000,000 threshold should be applied to financial services transactions with foreign persons by all parts of the consolidated U.S. enterprise combined that are financial services providers or intermediaries. Because the $3,000,000 threshold applies separately to sales and purchases, the mandatory reporting requirement may apply only to sales, only to purchases, or to both.

(i) The determination of whether a U.S. financial services provider or intermediary is subject to this mandatory reporting requirement may be based on the judgment of knowledgeable persons in a company who can identify reportable transactions on a recall basis, with a reasonable degree of certainty, without conducting a detailed manual records search.

(ii) Reporters that file pursuant to this mandatory reporting requirement must provide data on total sales and/or purchases of each of the covered types of financial services transactions and must disaggregate the totals by country and by relationship to the foreign transactor (foreign affiliate, foreign parent group, or unaffiliated).

(2) *Voluntary reporting.* If, during the fiscal year covered, sales or purchases of financial services by a firm that is a financial services provider or intermediary, or by a firm's subsidiaries, or parts, combined that are financial services providers or intermediaries, are $3,000,000 or less, the U.S. person is requested to provide an estimate of the total for each type of service. Provision of this information is voluntary. Because the $3,000,000 threshold applies separately to sales and purchases, this voluntary reporting option may apply only to sales, only to purchases, or to both.

(3) *Exemption claims.* Entities that receive the BE–180 survey but are not subject to the mandatory reporting requirements and choose not to report data voluntarily must file an exemption claim by completing pages one through five of the BE–180 survey and returning them to BEA.

(c) *BE–180 definition of financial services provider.* The definition of financial services provider used for this survey is identical to the definition of the term as used in the North American Industry Classification System, United States, 2007, Sector 52–Finance and Insurance, and holding companies that own or influence, and are principally engaged in making management decisions for these firms (part of Sector 55–Management of Companies and Enterprises). For example, companies and/or subsidiaries and other separable parts of companies in the following industries are defined as financial services providers: Depository credit intermediation and related activities (including commercial banking, savings institutions, credit unions, and other depository credit intermediation); non-depository credit intermediation (including credit card issuing, sales financing, and other non-depository credit intermediation); activities related to credit intermediation (including mortgage and nonmortgage loan brokers, financial transactions processing,

reserve, and clearinghouse activities, and other activities related to credit intermediation); securities and commodity contracts intermediation and brokerage (including investment banking and securities dealing, securities brokerage, commodity contracts and dealing, and commodity contracts brokerage); securities and commodity exchanges; other financial investment activities (including miscellaneous intermediation, portfolio management, investment advice, and all other financial investment activities); insurance carriers; insurance agencies, brokerages, and other insurance related activities; insurance and employee benefit funds (including pension funds, health and welfare funds, and other insurance funds); other investment pools and funds (including open-end investment funds, trusts, estates, and agency accounts, real estate investment trusts, and other financial vehicles); and holding companies that own, or influence the management decisions of, firms principally engaged in the aforementioned activities.

(d) *Covered types of services.* The BE–180 survey covers the following types of financial services transactions (sales or purchases) between U.S. financial companies and foreign persons: Brokerage services related to equity transactions; other brokerage services; underwriting and private placement services; financial management services; credit-related services, except credit card services; credit card services; financial advisory and custody services; securities lending services; electronic funds transfer services; and other financial services.

* * * * *

[FR Doc. 2010–4983 Filed 3–8–10; 8:45 am]

BILLING CODE 3510–06–P

## FEDERAL TRADE COMMISSION

### 16 CFR Part 322

### RIN 3084-AB18

## MORTGAGE ASSISTANCE RELIEF SERVICES

**AGENCY:** Federal Trade Commission (FTC or Commission).

**ACTION:** Notice of Proposed Rulemaking; request for public comment.

**SUMMARY:** Pursuant to the 2009 Omnibus Appropriations Act (Omnibus Appropriations Act), which was later clarified by the Credit Card Accountability and Responsibility and Disclosure Act of 2009 (Credit CARD Act), the Commission issues a Notice of Proposed Rulemaking (NPRM) concerning the practices of for-profit companies that, in exchange for a fee, offer to work with lenders and servicers on behalf of consumers to modify the terms of mortgage loans or to avoid foreclosure on those loans. The proposed Rule published for comment, among other things, would: prohibit providers of these services from making false or misleading claims; mandate that providers disclose certain information about these services; bar the collection of advance fees for these services; prohibit persons from providing substantial assistance or support to an entity they know or consciously avoid knowing is engaged in a violation of these Rules; and impose recordkeeping and compliance requirements.

**DATES:** Comments must be received by March 29, 2010.

**ADDRESSES:** Interested parties are invited to submit written comments electronically or in paper form by following the instructions in the Request for Comment part of the **SUPPLEMENTARY INFORMATION** section below. Comments in electronic form should be submitted at (*http://public.commentworks.com/ftc/MARS-NPRM*) (and following the instructions on the web-based form). Comments in paper form should be mailed or delivered to the following address: Federal Trade Commission, Office of the Secretary, Room H-135 (Annex W), 600 Pennsylvania Avenue, NW, Washington, DC 20580, in the manner detailed in the **SUPPLEMENTARY INFORMATION** section below.

**FOR FURTHER INFORMATION CONTACT:** Laura Sullivan, Evan Zullow, or Robert Mahini, Attorneys, Division of Financial Practices, Federal Trade Commission, 600 Pennsylvania Avenue, NW, Washington, DC 20580, (202) 326-3224.

**SUPPLEMENTARY INFORMATION:**

## I. Background

### *A. Statutory Authority*

On March 11, 2009, President Obama signed the Omnibus Appropriations Act.[1] Section 626 of this Act directed the Commission to commence, within 90 days of enactment, a rulemaking proceeding with respect to mortgage loans.[2] Section 626 also directed the FTC to use notice and comment rulemaking procedures under Section 553 of the Administrative Procedure Act (APA), 5 U.S.C. 553.[3]

On May 22, 2009, President Obama signed the Credit CARD Act.[4] Section 511 of this act clarified the Commission's rulemaking authority under the Omnibus Appropriations Act. First, Section 511 specified that the rulemaking "shall relate to unfair or deceptive acts or practices regarding mortgage loans, which may include unfair or deceptive acts or practices involving loan modification and foreclosure rescue services."[5] The Omnibus Appropriations Act, as clarified by the Credit CARD Act, does not specify any particular types of provisions that the Commission should or should not include in a rule addressing loan modification and foreclosure rescue services but rather directs the Commission to issue rules that "relate to" unfairness or deception.[6] Accordingly, the Commission interprets the Omnibus Appropriation Act to allow it to issue rules prohibiting or restricting conduct that may not be unfair or deceptive itself but would be reasonably related to the goal of preventing unfairness or deception.[7]

Second, Section 511 of the Credit CARD Act clarified that the Commission's rulemaking authority was limited to entities that are subject to enforcement by the Commission under the FTC Act.[8] The rules the Commission promulgates to implement the Omnibus Appropriations Act, therefore, cannot cover the practices of banks, thrifts, federal credit unions,[9] or certain nonprofits.[10]

The Omnibus Appropriations Act, as clarified by the Credit CARD Act, also permits both the Commission and the

[1] 2009 Omnibus Appropriations Act, Pub. L. 111-8, 123 Stat. 524.

[2] *Id.* § 626(a).

[3] *Id.* Because Congress directed the Commission to use these APA rulemaking procedures, the FTC will not use the procedures set forth in Section 18 of the FTC Act, 15 U.S.C. 57a.

[4] Credit Card Accountability Responsibility and Disclosure Act of 2009, Pub. L. 111-24, 123 Stat. 1734 (Credit CARD Act).

[5] *Id.* § 511(a)(1)(B).

[6] Id.

[7] Unlike Section 18 of the FTC Act, 15 U.S.C. 57, the Omnibus Appropriations Act, as clarified by the Credit CARD Act, does not require that the Commission identify with specificity in the rule the unfair or deceptive acts or practices that the prohibitions will prevent. Omnibus Appropriations Act § 626(a); Credit CARD Act § 511(a)(1)(B); *see also Katharine Gibbs Sch. v. FTC*, 612 F.2d 658 (2d Cir. 1979).

[8] Credit CARD Act § 511(a)(1)(B).

[9] 15 U.S.C. 45(a)(2).

[10] 15 U.S.C. 44. Bona fide nonprofit entities are exempt from the jurisdiction of the FTC Act. Sections 4 and 5 of the FTC Act confer on the Commission jurisdiction over persons, partnerships, or corporations organized to carry on business for their profit or that of their members. 15 U.S.C. 44, 45(a)(2). The FTC does, however, have jurisdiction over for-profit entities that provide mortgage-related services as a result of a contractual relationship with a nonprofit organization. *See Nat'l Fed'n of the Blind v. FTC*, 420 F.3d 331, 334-35 (4th Cir. 2005). In addition, the Commission asserts jurisdiction over "sham charities" that operate as for-profit entities in practice. *See infra* note 112 and accompanying text.

states to enforce the rules the FTC issues.[11] The Commission can use its powers under the FTC Act to investigate and enforce the rules, and the FTC can seek civil penalties under the FTC Act against those who violate the rules. In addition, states can enforce the rules by bringing civil actions in federal district court or another court of competent jurisdiction to obtain civil penalties and other relief. Before bringing such an action, however, states must give 60 days advance notice to the Commission or other "primary federal regulator"[12] of the proposed defendant, and the regulator has the right to intervene in the action.

### *B. The Advance Notice of Proposed Rulemaking*

On June 1, 2009, the Commission published in the **Federal Register** an Advance Notice of Proposed Rulemaking (ANPR) addressing the acts and practices of for-profit companies that offer to work with lenders or servicers on behalf of consumers seeking to modify the terms of their loan or to avoid foreclosure on the loan.[13] The ANPR described these services generically as "Mortgage Assistance Relief Services," and the rulemaking proceeding was entitled the Mortgage Assistance Relief Services (MARS) Rulemaking.[14] The MARS ANPR sought public comment on: (1) the mortgage assistance relief services industry; (2) unfair or deceptive acts or practices in which providers of these types of services are engaged; and (3) prohibitions and restrictions on providers of these services that are needed to prevent harm to consumers.[15]

In response to the ANPR, the Commission received a total of 46 comments.[16] Forty-six state attorneys general, federal banking agencies, consumer advocacy groups, nonprofit MARS providers, and mortgage lenders and brokers filed individual or group comments. In addition, a few comments were received from entities on behalf of the for-profit MARS providers that the Rule would cover.[17]

The institutional comments the FTC received overwhelmingly supported the issuance of a rule governing the activities of MARS providers.[18] Notably, a wide spectrum of these commenters, including 46 state attorneys general, consumer and community organizations,[19] and financial service providers,[20] strongly urged the Commission to propose a rule prohibiting or restricting the collection of fees for mortgage relief services until the promised services have been completed.[21] Additionally, a majority of the comments expressed concern regarding pervasive deception and abuse observed in the marketing of MARS, including the failure of MARS providers to perform promised services[22] and their misrepresentation of affiliation with the government, nonprofits, lenders, or loan servicers.[23]

## II. Mortgage Assistance Relief Services

### *A. The Mortgage Crisis and Assistance for Consumers*

As discussed in the ANPR, historic levels of consumer debt, increased unemployment, and a stagnant housing market have contributed to high rates of mortgage loan delinquency and foreclosure.[24] As a result, many

[11] Omnibus Appropriations Act § 626; Credit CARD Act § 511(a)(1)(B).

[12] Note, however, that most mortgage assistance relief service (MARS) providers likely will fall within the jurisdiction of the FTC.

[13] *Mortgage Assistance Relief Services*, 74 FR 26130 (June 1, 2009) (*MARS ANPR*).

[14] *Id.* On the same date, the Commission issued another ANPR, the Mortgage Acts and Practices Rulemaking, which addresses more generally activities that occur throughout the life-cycle of mortgage loans, *i.e.*, practices with regard to the marketing, advertising, and servicing of mortgage loans. *Mortgage Acts and Practices*, 74 FR 26118 (June 1, 2009). The Commission anticipates that it will publish an NPRM relating to other mortgage practices in the near future.

[15] *MARS ANPR*, 74 FR at 26137-38. The Credit CARD Act requires the FTC to consult with the Federal Reserve Board (Board) concerning any portion of the proposed Rule that addresses acts or practices covered under the Truth in Lending Act, 15 U.S.C. 1601-1667f. Credit CARD Act § 511(a)(1)(B). In this rulemaking, the Commission has consulted with and will continue to consult with the Board and, as appropriate, other federal banking agencies.

[16] The comments are available at (*http://www.ftc.gov/os/comments/mars/index.shtm*). In addition, a list of commenters cited in this Notice, along with their short citation names or acronyms used throughout the Notice, is attached to this Notice as Appendix A.

[17] One of these comments was from The National Loss Mitigation Association (TNLMA), which claims to be "the premier national association" advocating for the for-profit MARS industry. *See* TNLMA at 1. The Commission has alleged that TNLMA is controlled by a named defendant in an on-going FTC law enforcement action. *See FTC v. Loss Mitigation Servs., Inc.*, No. SACV09-800 DOC(ANX) (C.D. Cal. filed July 13, 2009).

[18] *See, e.g.*, NAAG at 2 ("With a nationwide rule, states could bring actions in federal court to stop violators from operating in any jurisdiction."); MA AG at 2 ("We applaud. . . [the FTC's] current step toward regulating foreclosure-rescue and advance-fee schemes."); MN AG at 4 ("Although several states, including Minnesota, have passed laws regulating loan modification and/or foreclosure rescue companies, a national rule targeting such companies would be beneficial. . . ."); OH AG at 2 ("[O]ur office believes that a national rule targeting rescue companies is needed."); CRC at 1 ("[We] strongly urge the FTC to develop effective rules to address the new cottage industry of fee for service loan modification providers.); NCLC at 2 ("We urge the FTC to enact strong rules to end abusive and deceptive practices by for-profit mortgage assistance relief companies."); CMC at 1 ("The CMC strongly supports the concept of prohibiting specific unfair or deceptive practices of MARS providers."); Chase at 1 ("Chase strongly supports the proposed regulations because it has witnessed MARS entities engage in patterns of abusive and deceptive practices to the detriment of borrowers. . . ."); NCRC at 4 ("The FTC should act aggressively to promulgate a rule with all possible haste."); OTS at 1 (stating its support of "FTC efforts in this important area"); HPC at 1 ("HPC supports issuance of a rule directed at mortgage relief providers."); Shriver at 4 ("[W]e commend the FTC on the proposed regulation. . . .").

[19] *See, e.g.*, CRC at 4 ("Banning advance fees is a crucial component to any effort to reduce. . . unfair and deceptive practices in the loan modification industry and will likely push many scam artists out of our communities. The FTC should ban the collection of advance fees outright. . . ."); NCLC at 5 ("NCLC encourages the FTC to ban mortgage assistance relief services from seeking up-front payments. Prohibiting up-front payments will curb the injury and unfairness caused when companies take large payments from borrowers and fail to obtain loan modifications on their behalf, whether the outfit is an outright scam or merely ineffective."); Shriver at 2 (recommending prohibition on up-front fees); NCLR at 1 (recommending that up-front fees be banned).

[20] *See, e.g.*, CMC at 8 ("The CMC would support a ban or limitation on the collection of advance fees by MARS providers."); Chase at 3 ("[T]he payment of advance fees should be banned because there is no guarantee the MARS provider will be successful. . . ."); AFSA at 6 ("[U]p-front fees should be restricted, fees should be reasonable, and only be permitted where services were actually provided"); HPC at 2 (arguing that consumers should not be required to pay up-front fees).

[21] *See, e.g.*, NAAG at 9 ("A ban on advance fees. . . is necessary for any meaningful mortgage consultant regulation. . . . A key provision of any rule regulating mortgage consultants is that no fee may be charged or collected until after the mortgage consultant has fully performed each and every service the mortgage consultant contracted to perform or represented that he or she would perform."); MN AG at 4 ("The only way to ensure that loan modification and foreclosure rescue companies are working for the benefit of the distressed homeowner is to ban the collection of any fees until all promised services have been performed."); MA AG at 2 (urging the Commission to "[b]an advance-fee schemes related to foreclosure assistance"); *see also* NYC DCA at 4 ("The FTC rulemaking should ban foreclosure rescue services from collecting up-front fees from consumers. Collecting fees in advance gives these businesses an easy opportunity to swindle consumers by failing to provide adequate service, or not providing any service at all."); OH AG at 3-4 ("A prohibition or low fee cap on up-front fees is of primary importance in regulating foreclosure rescue services.").

[22] *See, e.g.*, NCLC at 5; NAAG at 4; MN AG at 1-2.

[23] *See, e.g.*, NCLC at 3; OH AG at 4; ABA at 7; Chase at 3.

[24] Delinquency and foreclosure start rates are at record highs. In the third quarter of 2009, the Mortgage Bankers Association's quarterly National Delinquency Survey found that 14.41% of all mortgage loans were either in foreclosure or delinquent by at least one payment, the highest percentage recorded in the survey's history. Mortgage Bankers Association, *Delinquencies Continue to Climb in Latest MBA National Delinquency Survey* (Nov. 19, 2009), *available at* (*http://www.mbaa.org/NewsandMedia/PressCenter/71112.htm*). In December 2008, Credit Suisse Bank forecasted a total of 9 million foreclosures for the period 2009 through 2012. *See* Credit Suisse Fixed Income Research 2 (2008), *available at* (*http://*

consumers struggling to make their mortgage payments are in search of ways to avoid foreclosure. There are a number of options that may be available to consumers, including: (1) short sales or deeds-in-lieu of foreclosure transactions in which the proceeds of a sale of the home or the receipt of the deed to the home is treated as repayment of the outstanding mortgage balance; (2) forbearance or repayment plans that do not reduce the amount that consumers pay but give them more time to bring their payments current; and (3) loan modifications to reduce the amount of consumers' monthly payments. Because loan modifications allow consumers to stay in their homes and reduce their overall debt, this possible solution often has great appeal to consumers. The Commission's law enforcement actions suggest that loan modifications may currently be the most frequently marketed and sold mortgage assistance relief service.[25]

In response to the recent mortgage crisis, a number of government and private sector programs have been initiated to assist distressed homeowners in modifying or refinancing their mortgages.[26] In March 2009, for example, the Obama Administration launched the Making Home Affordable (MHA) program, which provides mortgage owners and servicers with financial incentives to modify and refinance loans.[27] More than 650,000 loans have been modified pursuant to this program.[28] In addition, state and local governments, nonprofit organizations, housing counselors, and private sector entities have offered a variety of other programs and services to help homeowners in distress.[29]

Despite these public and private efforts, consumers continue to seek assistance from for-profit companies in obtaining loan modifications. Many consumers who are seeking loan modifications are not eligible for the MHA program or other government and private assistance programs. For example, while the Department of the Treasury has estimated that the MHA program will help 3-4 million borrowers by February 2012,[30] industry surveys report that roughly 7.5 million households are at least 30 days behind on their mortgage payments or already are in foreclosure.[31] Even among consumers who may be eligible for the program, it appears many are failing to meet other requirements necessary to qualify for a permanent loan modification.[32] In addition, even if consumers are eligible for government and private assistance programs, many housing counselors and servicers have struggled to respond in a timely manner to the sheer number of consumers who are seeking loan modifications,[33] leaving consumers who are desperate to save their homes waiting anxiously for assistance.

Many consumers who have been unable to obtain assistance have turned to MARS providers. These for-profit companies have widely promoted their ability to help consumers in negotiating with lenders or servicers and in taking other steps to prevent foreclosure.[34] Responding to consumer demand, these providers focus their advertising mainly on their capacity to obtain mortgage loan modifications[35] as opposed to other forms of foreclosure relief, such as a short sale or loan forbearance.[36] Mortgage assistance services based on negotiating with the lender or servicer to obtain a loan modification or some other type of foreclosure relief have mushroomed in the past two years.[37] Given that there are many small and relatively new MARS providers, it is difficult to estimate the total number of such providers,[38] but comments suggest that there are at least 450.[39]

Typically, MARS providers charge consumers advance fees in the thousands of dollars.[40] Some providers

*www.chapa.org/pdf/ ForeclosureUpdateCreditSuisse.pdf*); *see also* NAAG at 2 ("An estimated 8.1 million mortgages are anticipated to be in foreclosure within the next four years.").

[25] *See* Appendix B (list of FTC actions against MARS providers).

[26] Section II.C of the ANPR described the ongoing federal, state, and local efforts to educate consumers, to assist consumers in working with their lenders and servicers, and to make loan modifications available to a larger number of consumers struggling to stay current on their mortgage. *See MARS ANPR*, 74 FR at 26135-36.

[27] For example, the program offers servicers that modify loans according to its guidelines an up-front fee of $1,000 for each modification,"pay for success" fees on still-performing loans of $1,000 per year, and one-time bonus incentive payments of $1,500 to lender/investors and $500 to servicers for modifications made while a borrower is still current on mortgage payments. U.S. Dep't of Treasury, *Making Home Affordable Summary of Guidelines* 2, *available at* (*http://www.treas.gov/press/releases/ reports/guidelines_summary.pdf*).

[28] Renae Merle, *Lenders to Get Push to Help Homeowners*, Wash. Post, Nov. 29, 2009, at A4, *available at* (*http://www.washingtonpost.com/wp-dyn/content/article/2009/11/28/ AR2009112802436.html*).

[29] *See, e.g.*, FTC, *Mortgage Payments Sending You Reeling? Here's What to Do, available at* (*http://www.ftc.gov/bcp/edu/pubs/consumer/ homes/rea04.pdf*) (2009) (describing various credit counselor alternatives); *Foreclosure Prevention Workshops for Consumers, available at* (*http:// www.freddiemac.com/avoidforeclosure/ workshops.html*) (last visited Dec. 22, 2009) (describing local credit counseling events by local governments, nonprofits, and other organizations).

[30] *See, e.g.*, Press Release, Making Home Affordable, *Making Home Affordable Program on Pace to Offer Help to Millions of Homeowners* (Aug. 4, 2009), *available at* (*http:// makinghomeaffordable.gov/pr_08042009.html*).

[31] *See* Ruth Simon & James R. Hagerty, *One in Four Borrowers Is Underwater*, Wall St. J., Nov. 24, 2009, at A1, *available at* (*http://online.wsj.com/ article/SB125903489722661849.html*).

[32] *See, e.g.*, Brady Dennis & Renae Merle, *Democrats Push More Mortgage Aid*, Wash. Post, Dec. 8, 2009, at A19, *available at* (*http:// www.washingtonpost.com/wp-dyn/content/article/ 2009/12/07/AR2009120703903.html*) (noting that "6 percent of borrowers enrolled in the [MHA] program so far have moved from trial modification to permanent adjustment"); Renae Merle, *Banks Slow to Modify Mortgages*, Wash. Post, Aug. 5, 2009, *available at* (*http:// www.washingtonpost.com/wp-dyn/content/article/ 2009/08/04/AR2009080401134.html*) ("Less than 10 percent of delinquent borrowers eligible for the Obama administration's foreclosure prevention program have received help so far, according to Treasury Department estimates. . . .").

[33] *See, e.g.*, NCLC at 2 (noting that servicers have failed to meet borrower demand for loan modifications); NAAG at 7 (noting that borrowers have had a difficult time reaching servicers and obtaining their assistance); Peter S. Goodman, *A Plan to Stem Foreclosures, Buried in a Paper Avalanche*, N.Y. Times, July 29, 2009, at A1, *available at* (*http://www.nytimes.com/2009/06/29/ business/29loanmod.html*).

[34] *See MARS ANPR*, 74 FR at 26134-35.

[35] Another foreclosure prevention method that MARS providers have used is "sale-leaseback" or "title reconveyance" transactions. In these transactions, MARS providers instruct financially distressed consumers to transfer title to their homes to the providers and then lease the property back from the providers. The providers promise to reconvey title to the homes at some later date, yet often do not do so, thereby giving the providers the equity in the homes. The incidence of such sale leaseback and title reconveyance transactions appears to have declined, in part because many consumers do not have significant equity in their homes.

[36] *See, e.g.*, NAAG at 2 ("[T]he [loan modification] consulting business model is dominating the marketplace. Consultants are by far the most common source of consumer complaints received by our offices in the area of mortgage assistance services."); OH AG at 2 ("For those companies that actually do put some effort into helping the consumer, the most common business model is an offer to negotiate a loan modification or repayment plan with the consumer's servicer."); CRC at 1 ("In California, advertisements promising loan modification success are inescapable."); *see also* Appendix B.

[37] *See* id.

[38] *See, e.g.*, NAAG at 3 ("It is difficult to gather exact empirical data on companies providing loan modification and foreclosure rescue services due to the predominance of internet-based companies and their ephemeral nature. The difficulty of gathering information is increased due to the fact many of these companies operate primarily over the internet and do not maintain a physical presence in the states in which they do business."); OH AG at 2 ("There is little reliable data about the foreclosure rescue industry.").

[39] *See, e.g.*, NAAG at 4 (noting that state attorneys general have investigated more than 450 mortgage assistance relief services).

[40] *Id.*; *see also, e.g.*, CRC at 3 ("The average fee that we are seeing borrowers charged is $3,000; we have seen fees as high as $9,500."); NCRC at 3 ("NCRC documented a median fee of $2,900. . . for our testing study. Fees ranged as high as

Continued

collect their entire fee at the beginning of the transaction,[41] and others request two to three large installment payments from consumers.[42] One commenter stated that many MARS providers have begun to offer their services piecemeal, collecting fees upon reaching various stages in the process, such as assembling the documentation required by the lender or servicer, mailing paperwork to the lender or servicer, and negotiating with a lender's loss mitigation department.[43]

As discussed in the ANPR, MARS providers often claim to possess specialized knowledge of the mortgage lending industry,[44] sometimes hiring former mortgage brokers and real estate agents[45] to support their claims. In addition, a growing number of MARS providers are employing or affiliating with lawyers.[46] The providers often tout the expertise of these attorneys in negotiating with lenders and servicers. In some cases, MARS providers also offer "forensic audits," purported reviews of mortgage loans to determine lender and servicer compliance with federal and state law, thereby supposedly helping the consumer to acquire the leverage needed to obtain better loan modifications.[47] Providers also may use their relationship with attorneys to assert that they are not covered by state laws that prohibit non-attorneys from collecting advance fees for loan modification services.[48] For example, a previous California law that imposed a number of restrictions on "foreclosure consultants" also allowed "licensed attorneys. . . [to] charge advance fees under certain limited circumstances."[49] The State Bar of California subsequently observed that "foreclosure consultants may be attempting to avoid the statutory prohibition on collecting a fee before any services have been rendered by having a lawyer work with them in foreclosure consultations."[50] California has since passed a new law that removes this exemption.[51]

### *B. Observed Consumer Protection Abuses*

The FTC has extensive law enforcement experience with MARS providers. In the past two years, the Commission has filed 28 law enforcement actions against providers of loan modification and foreclosure rescue services.[52] This extensive law enforcement experience, as well as the information received in response to the ANPR,[53] strongly suggests that the deceptive practices of MARS providers are widespread and are causing substantial harm to consumers. MARS providers often misrepresent the services that they will perform and the results they will obtain for consumers. Indeed, providers frequently fail to perform even the most basic of promised services. As a result, consumers not only lose the thousands of dollars they pay to the providers, but may also lose their homes.

Typically, MARS providers initiate contact with prospective customers through Internet, radio, television, or direct mail advertising. The ads instruct consumers to call a toll-free telephone number or e-mail the company. Customary claims in the ads and ensuing telemarketing and email pitches include representations that the MARS provider: (1) will obtain for the consumer a substantial reduction in a mortgage loan's interest rate, principal amount, or monthly payments; (2) will achieve these results within weeks;[54] (3) has special relationships with lenders

---

$5,600. . . ."); NCLR at 1 (observing fees as high as $8,000); NCLC at 6 (estimating fees to be between $2,000 and $4,000).

[41] *See, e.g.*, *FTC v. Infinity Group Servs.*, No. SACV09-00977 DOC (MLGx) (C.D. Cal. filed Aug. 26, 2009); *FTC v. Freedom Foreclosure Prevention Specialists, LLC*, No. 2:09-cv-01167-FJM (D. Ariz. June 1, 2009); *FTC v. Fed. Loan Modification Law Ctr., LLP*, No. SACV09-401 CJC (MLGx) (C.D. Cal. filed Apr. 3, 2009).

[42] *See, e.g.*, *FTC v. Truman Foreclosure Assistance, LLC*, No. 09-23543 (S.D. Fla. filed Nov. 23, 2009); *FTC v. Washington Data Res., Inc.*, No. 8:09-cv-02309-SDM-TBM (M.D. Fla. filed Nov. 12, 2009); *FTC v. First Universal Lending, LLC*, No. 09-CV-82322, Mem. TRO at 5 (S.D. Fla. filed Nov. 24, 2009).

[43] *See, e.g.*, NAAG at 5; *see also, e.g.*, *FTC v. Debt Advocacy Ctr., LLC*, No. 1:09CV2712 (N.D. Ohio filed Nov. 19, 2009).

[44] *See, e.g.*, *FTC v. Fed. Housing Modification Dep't*, No. 09-CV-01753 (D.D.C. filed Sept. 15, 2009); *FTC v. LucasLawCenter "Inc.,"* No. 09-CV-770 (C.D. Cal. filed July 7, 2009).

[45] *See, e.g.*, NCLC at 11 ("Mortgage brokers–often cited as one of the driving forces in the growth of bad subprime loans–are in demand to work for loan modification companies. One MARS advertised for consultants with mortgage and real estate experience to join its cadre of loan modification specialists.").

[46] *See, e.g.*, *FTC v. Loss Mitigation Servs., Inc.*, No. SACV09-800 DOC (ANX), Mem. Supp. Pls. Ex Parte App. at 3 (Aug. 3, 2009) (alleging that defendants engaged in "misrepresentations prohibited by the TRO, behind a new facade: the 'Walker Law Group,'" which was "nothing more than a sham legal operation designed to evade state law restrictions on the collection of up-front fees for loan modification and foreclosure relief"); *FTC v. LucasLawCenter "Inc.,"* No. SACV-09-770 DOC (ANX) (C.D. Cal. filed July 7, 2009); *FTC v. Data Med. Capital Inc.*, No. SA-CV-99-1266 AHS (Eex) (C.D. Cal., contempt application filed May 27, 2009); *FTC v. US Foreclosure Relief Corp.*, No. SACV09-768 JVS (MGX) (C.D. Cal. filed July 7, 2009); *FTC v. Fed. Loan Modification Law Ctr., LLP*, No. SACV09-401 CJC (MLGx) (C.D. Cal. filed Apr. 3, 2009); *see also, e.g.*, *Cincinnati Bar Assoc. v. Mullaney,* 119 Ohio St. 3d 412 (2008) (disciplining attorneys involved in mortgage assistance relief services); Press Release, North Carolina Dep't of Justice, *AG Cooper Targets California Schemes that Prey on NC Homeowners* (July 15, 2009), *available at* (*http://www.ncdoj.com/News-and-Alerts/News-Releases-and-Advisories/Press-Releases/AG-Cooper-targets-California-schemes-that-prey-on-.aspx*); Press Release, Colorado Attorney General's Office, *Attorney General Announces Actions Against Seven Loan-Moficiation Companies As Part of Multistate Sweep* (July 15, 2009), *available at* (*http://www.coloradoattorneygeneral.gov/press/news/2009/07/15/attorney_general_announces_actions_against_seven_loan_modification_companies_p*); Press Release, Illinois Attorney General, *Illinois Attorney General Sues 14th Company for Mortgage Rescue Fraud* (Aug. 28, 2009), *available at* (*http://www.illinoisattorneygeneral.gov/pressroom/2008_08/20080828.html*).

[47] *See, e.g.*, *FTC v. Data Med. Capital Inc.*, No. SA-CV-99-1266 AHS (Eex), Mem. Supp. App. Contempt at 18 (C.D. Cal. filed May 27, 2009); *FTC v. Fed. Loan Modification Law Ctr., LLP,* No. SACV09-401 CJC (MLGx) (C.D. Cal. filed Apr. 3, 2009); California Dep't of Real Estate, *Consumer Alert* 6 (warning consumers of "forensic loan reviews"), *available at* (*http://www.dre.ca.gov/pdf_docs/FraudWarningsCaDRE03_2009.pdf*).

[48] *See supra* notes 46-47; *see also* IL AG at 2 ("Attorneys are using the [state] exemption to market and sell the same mortgage consulting services provided by non-attorneys.").

[49] Press Release, Office of the Attorney General, California Dep't of Justice, *Brown Alerts Homeowners that New Law Prohibits Up-front Fees for Foreclosure Relief Services* (Oct. 15, 2009), *available at* (*http://ag.ca.gov/newsalerts/release.php?id=1821*).

[50] *See* State Bar of California, *Ethics Alert: Legal Services to Distressed Homeowners and Foreclosure Consultants on Loan Modifications* 2, Ethics Hotliner (Feb. 2, 2009), *available at* (*http://www.calbar.ca.gov/calbar/pdfs/ethics/Ethics-Alert-Foreclosure.pdf*) ("California State Bar Ethics Alert"); *see also* Florida Bar, *Ethics Alert: Providing Legal Services to Distressed Homeowners* at 1, *available at* (*http://www.floridabar.org/TFB/TFBResources.nsf/Attachments/872C2A9D7B71F05785257569005795DE/$FILE/loanModification20092.pdf?OpenElement*) ("The Florida Bar's Ethics Hotline recently has received numerous calls from lawyers who have been contacted by non-lawyers seeking to set up an arrangement in which the lawyers are involved in loan modifications, short sales, and other foreclosure-related rescue services on behalf of distressed homeowners. . . . The [Florida] Foreclosure Rescue Act. . . imposed restrictions on non-lawyer loan modifiers to protect distressed homeowners. The new statute appears to be the impetus for these inquiries.").

[51] Cal Civ. Code § 2944.7; *see also* Press Release, Office of the Attorney General, California Dep't of Justice, *Brown Alerts Homeowners that New Law Prohibits Up-front Fees for Foreclosure Relief Services* (Oct. 15, 2009), *available at* (*http://ag.ca.gov/newsalerts/release.php?id=1821*).

[52] *See* Appendix B.

[53] As stated above, the Commission received few comments from MARS providers in response to its ANPR. Therefore, to ensure that it has complete and accurate information concerning mortgage assistance service providers, the effect of their activities on consumers, and the impact of proposed restrictions in their operations, the Commission is especially interested in receiving comments from MARS providers in response to this NPRM.

[54] *See, e.g., FTC v. First Universal Lending, LLC*, No. 09-CV-82322, Mem. TRO at 4-5 (S.D. Fla. filed Nov. 24, 2009); *FTC v. 1st Guar. Mortgage Corp.*, No. 09-DV-61846 (S.D. Fla. filed Nov. 17, 2009); *FTC v. Freedom Foreclosure Prevention Specialists, LLC*, No. 2:09-cv-01167-FJM (D. Ariz. filed June 1, 2009); *FTC v. Fed. Loan Modification Law Ctr., LLP*, No. SACV09-401 CJC (MLGx) (C.D. Cal. filed Apr. 3, 2009).

and servicers;[55] and (4) is closely affiliated with the government,[56] various nonprofit programs,[57] or the consumer's own lender or servicer.[58] In some cases, MARS providers also entice consumers to make substantial up-front payments with false promises of a refund if they do not receive the promised results.[59] Providers typically also represent that there is high likelihood, and in some instances a "guarantee," of success.[60] Despite these promises of extremely high success rates, the vast majority of consumers do not receive the promised results.[61]

Even if the services of MARS providers could deliver the promised results, many providers do not provide even the most basic services they claimed they would perform. After collecting their up-front fees, MARS providers often fail to make initial contact with the lender or servicer for months, if at all. They frequently neglect to commence negotiations or have substantive discussions with the consumer's lender or servicer.[62] In many cases, the consumer harm from this failure to perform as promised is exacerbated because MARS providers often instruct consumers to stop communicating with their lenders.[63] Because consumers sever their contact with lenders and servicers, they may not discover that their MARS provider is doing little or nothing on their behalf; may never learn of concessions that their lender or servicer is willing to make; or, worst of all, may never discover that foreclosure is imminent.[64] In some cases, MARS providers advise consumers to discontinue making their mortgage payments, without informing them that doing so can result in the loss of their homes and damage to their credit ratings.[65] Because of this advice, consumers who otherwise could have avoided becoming delinquent may damage their credit rating or end up in foreclosure.

In addition, some MARS providers make the specific claim that they offer legal services,[66] when, in fact, no

[55] *See, e.g.*, *FTC v. Debt Advocacy Ctr., LLC*, No. 1:09CV2712 (N.D. Ohio filed Nov. 19, 2009); *FTC v. 1st Guar. Mortgage Corp.*, No. 09-DV-61846 (S.D. Fla filed Nov. 17, 2009); *FTC v. LucasLawCenter "Inc.,"* No. SACV-09-770 DOC (ANX) (C.D. Cal. filed July 7, 2009); *FTC v. US Foreclosure Relief Corp.*, No. SACVF09-768 JVS (MGX) (C.D. Cal. filed July 7, 2009).

[56] *See, e.g.*, *FTC v. Washington Data Res., Inc.*, No. 8:08-cv-02309-SDM-TBM (M.D. Fla. filed Nov. 12, 2009) (alleging that defendants falsely represented that they were affiliated with the United States government); *FTC v. Fed. Housing Modification Dep't*, No. 09-CV-01753 (D.D.C. filed Sept. 15, 2009); *FTC v. Sean Cantkier,* No. 1:09-cv-00894 (D.D.C. filed July 10, 2009) (alleging defendants placed advertisements on Internet search engines that refer consumers to websites that deceptively appear to be affiliated with government loan modification programs); *FTC v. Thomas Ryan*, No. 1:09-00535 (HHK) (D.D.C. filed Mar. 25, 2009); *FTC v. Fed. Loan Modification Law Ctr., LLP*, No. SACV09-401 CJC (MLGx) (C.D. Cal. filed Apr. 3, 2009) (charging defendant with misrepresenting that it is part of or affiliated with the federal government); *see also* OH AG at 4 ("Our office has seen many companies that have names or advertisement that make it sound like they are government sponsored."); NCLC at 3 ("One website, USHUD.com, even claims to be 'America's Only Free Foreclosure Resource' even though HUD-certified agencies also offer free assistance regardless of income.").

[57] *See FTC v. New Hope Prop. LLC*, No. 1:09-cv-01203-JBS-JS (D.N.J. filed Mar. 17, 2009); *FTC v. Hope Now Modifications, LLC*, No. 1:09-cv-01204-JBS-JS (D.N.J. filed Mar. 17, 2009).

[58] *See, e.g.*, *FTC v. Kirkland Young, LLC*, No. 09-23507 (S.D. Fla. filed Nov. 18, 2009) (alleging that defendants falsely represented an affiliation with borrowers' lenders); *FTC v. Loss Mitigation Servs., Inc.*, No. SACV-09-800 DOC (ANX) (C.D. Cal. filed July 13, 2009); *see also* ABA at 7 ("They often misuse the intellectual property of lenders and servicers by claiming in mailings, on websites, and in other communications that they either are affiliated with the lenders and servicers or have special relationships with them that do not exist. They use the names, trademarks and logos of these lenders and servicers in their advertising to deceive consumers into believing they can obtain modification relief for them that these consumers could not otherwise obtain for themselves at no cost."); Chase at 3 ("These MARS entities also may lead the borrower to believe that they are associated with the servicer or that they have special agreements with the servicer for processing loan modifications, when, in fact, they do not.").

[59] *See, e.g.*, *FTC v. Truman Foreclosure Assistance, LLC*, No. 09-23543 (S.D. Fla. filed Nov. 23, 2009) (alleging that defendant falsely claims to provide "100% money back guarantee"); *Debt Advocacy Ctr., LLC*, No. 1:09CV2712 (N.D. Ohio filed Nov. 19, 2009) (alleging that defendants falsely represent they would refund borrower fee if unsuccessful); *FTC v. Infinity Group Servs.*, No. SACV09-00977 DOC (MLGx) (C.D. Cal. filed Aug. 26, 2009); *FTC v. Loan Modification Shop, Inc.*, No. 3:09-cv-00798 (JAP), Mem. Supp. TRO at 1 (D.N.J. amended complaint filed Aug. 4, 2009) (alleging defendants represented that advance fees were fully refundable); *FTC v. Freedom Foreclosure Prevention Specialists, LLC*, No. 2:09-cv-01167-FJM (D. Ariz. June 1, 2009) (alleging defendants promised "100% money-back guarantee" but then failed to provide refunds).

[60] *See, e.g.*, *FTC v. Truman Foreclosure Assistance, LLC*, No. 09-23543 (S.D. Fla. filed Nov. 23, 2009) (alleging defendants falsely claimed success rate of 97 to 100%); *FTC v. Debt Advocacy Ctr., LLC*, No. 1:09CV2712 (N.D. Ohio filed Nov. 19, 2009) (alleging defendants falsely claimed a 90% success rate); *FTC v. Loss Mitigation Servs., Inc.*, No. SACV09-800 DOC (ANX) (C.D. Cal. filed July 13, 2009) (alleging "[d]efendants have told homeowners that their success rate is above ninety percent"); *FTC v. LucasLawCenter "Inc.,"* No. SACV-09-770 DOC (ANX) (C.D. Cal. filed July 7, 2009) (alleging "[d]efendants' representatives tell consumers that Defendants have a success rate in the ninetieth percentile with their lender"); *FTC v. Freedom Foreclosure Prevention Specialists, LLC*, No. 2:09-cv-01167-FJM (D. Ariz. filed June 1, 2009) (alleging defendants claimed to have 97% success rate); *FTC v. Data Med. Capital Inc.*, No. SA-CV-99-1266 AHS (Eex), Mem. Supp. App. Contempt at 8 (C.D. Cal. filed May 27, 2009) (alleging defendants represented 100% success rate to consumers).

[61] *See, e.g.*, *infra* note 123-27; CMC at 1 ("CMC members and other mortgage servicers found that MARS providers consistently misrepresent their ability to obtain concessions from servicers. . . ."); Chase at 3 ("They collect their fees up-front and promise the borrower they can get a loan modification or other foreclosure relief, when, in fact, this is only a determination that the servicer can make after reviewing the borrower's financial information and investor agreements.").

[62] *See, e.g.*, *FTC v. Truman Foreclosure Assistance, LLC*, No. 09-23543 (S.D. Fla. filed Nov. 23, 2009) (alleging that defendant often failed to return borrowers' phone calls and failed to contact and negotiate with lenders); *FTC v. Apply2Save, Inc.*, No. 2:09-cv-00345-EJL-CWD (D. Idaho filed July 14, 2009) (complaint alleging that "[m]any consumers learned from their lenders that Defendants had not even contacted the lender or that Defendants had only minimal, non-substantive contact with the lender"); *FTC v. Loss Mitigation Servs., Inc.*, No. SACV09-800 DOC (ANX) (C.D. Cal. filed July 13, 2009) (alleging that "Defendants have misrepresented that negotiations were underway, although Defendants had not yet contacted the lender"); *FTC v. LucasLawCenter "Inc.,"* No. SACV-09-770 DOC (ANX), Mem. Supp. App. TRO at 19 (C.D. Cal. filed July 7, 2009) (alleging that consumers who contact their lenders "learn that [Defendant] never even contacted the lender, or merely verified the consumer's loan information'); *FTC v. Freedom Foreclosure Prevention Specialists, LLC*, No. 2:09-cv-01167-FJM (D. Ariz. June 1, 2009) (alleging that defendants failed to act on homeowners' cases for longer than four to six weeks without completing – or in some cases, even starting – negotiations and "failed to return consumers' repeated telephone calls, even when homeowners were on the brink of foreclosure').

[63] *See, e.g.*, *FTC v. Truman Foreclosure Assistance, LLC*, No. 09-23543 (S.D. Fla. filed Nov. 23, 2009); *FTC v. Kirkland Young, LLC*, No. 09-23507 (S.D. Fla filed Nov. 18, 2009); *FTC v. Washington Data Res., Inc.*, No. 8:09-cv-02309-SDM-TBM (M.D. Fla. filed Nov. 12, 2009); *FTC v. Loss Mitigation Servs., Inc.*, No. SACV09-800 DOC (ANX) (C.D. Cal. filed July 13, 2009); *FTC v. US Foreclosure Relief Corp.*, No. SACV09-768 JVS (MGX) (C.D. Cal. filed July 7, 2009).

[64] *See, e.g.*, *FTC v. Truman Foreclosure Assistance, LLC*, No. 09-23543 (S.D. Fla. filed Nov. 23, 2009) ("When consumers speak with their lenders directly, they often discover that Defendants had not yet contacted the lender or only had left messages or had non-substantive contacts with the lender."); *FTC v. Loss Mitigation Servs., Inc.*, No. SACV09-800 DOC (ANX), Mem. In Supp. of Ex Parte TRO at 18-19 (C.D. Cal. filed July 13, 2009) (detailing "devastating effects" of consumers learning too late of lack of effort by loan modification company); CRC at 7 ("People who do have a chance of keeping the home are being steered away from legitimate, free homeowner counseling services or are failing to take any action before it is too late because they have been assured everything is being taken care of for them already. All too often, it is not.").

[65] *See, e.g.*, *FTC v. First Universal Lending, LLC*, No. 09-CV-82322 (S.D. Fla. filed Nov. 24, 2009); *FTC v. Fed. Housing Modification Dep't*, No. 09-CV-01753 (D.D.C. filed Sept. 15, 2009); *FTC v. LucasLawCenter "Inc.,"* No. SACV-09-770 DOC (ANX)(C.D. Cal. filed July 9, 2009) ("In numerous instances, Defendants' representative [allegedly] encourages consumers to stop paying their mortgages, telling consumers that delinquency will demonstrate the consumers' hardship to the lender and make it easier to obtain a loan modification."); *see also* NAAG at 10 ("In some cases, the mortgage consultants will actually counsel the consumer not to make a mortgage payment, which of course frees up funds for the consultants' fee.").

[66] *See, e.g.*, *FTC v. Fed. Housing Modification Dep't*, No. 09-CV-01753 (D.D.C. filed Sept. 16, 2009) (alleging that defendants falsely claim to have attorneys or forensic accountants on staff); *FTC v.*

Continued

attorneys are employed at the company or, even if there are, they do little or no legal work for consumers.[67] The Commission's law enforcement experience, state law enforcement, the comments received in response to the ANPR, and state bar actions indicate that a growing number of attorneys themselves are engaged in deceptive and unfair practices in the marketing and sale of MARS.[68]

*C. Continued Law Enforcement and Other Responses*

The Commission has taken aggressive action to protect consumers from deceptive MARS providers. As part of that effort, the FTC has filed 28 lawsuits[69] in the last two years against entities in this industry for engaging in deceptive practices in violation of the FTC Act and, in several instances, the Commission's Telemarketing Sales Rule (TSR).[70] The FTC has coordinated with state law enforcement and federal agencies, including the Department of Justice, the Department of Housing and Urban Development (HUD), the Treasury Department, and the Office of the Special Inspector General for the Troubled Asset Relief Program (SIGTARP), in these efforts.[71] For example, the FTC has conducted two nationwide sweeps: "Operation Stolen Hope" (November 24, 2009), in which the Commission joined with 20 states collectively to file over one hundred lawsuits against MARS providers,[72] and "Operation Loan Lies" (July 15, 2009), in which the FTC coordinated with 25 federal and state agencies to bring 189 actions against MARS defendants.[73] Previously, the Commission, jointly with the Justice Department, the Treasury Department, HUD, and the Illinois Attorney General's office, had announced several law enforcement actions.[74]

In addition to coordination with the Commission, the states have continued to engage in their own aggressive law enforcement. For example, the National Association of Attorneys General (NAAG) reports that, as of July 2009, its members had investigated 450 MARS providers and sued hundreds of them for alleged state law violations.[75] The states also have continued to enact laws and regulations to address practices related to MARS.[76]

## III. Discussion of the Proposed Rule

*A. Section 322.1: Scope*

As detailed in Section I, the scope of this rulemaking is set forth in the Omnibus Appropriations Act, as clarified by the Credit CARD Act. These statutes direct the Commission to commence a rulemaking proceeding to enact rules "related to unfair or deceptive acts or practices" that address, among other things, mortgage assistance relief services. As noted earlier, the Commission interprets this language to allow it to issue rules that not only restrict practices that are themselves unfair or deceptive, but also to restrict other practices that may not themselves be unfair or deceptive but the restriction of which is reasonably related to the goal of preventing unfairness or deception. The Commission's rulemaking authority is limited by the Credit CARD Act to persons over whom the FTC has enforcement power under the FTC Act.

*B. Section 322.2: Definitions*

1. Section 322.2(h): Mortgage Assistance Relief Service

As discussed, the proposed Rule is intended to regulate for-profit providers of mortgage assistance relief services. The controlling definition of the proposed Rule, which informs the parameters of its scope, is that of "mortgage assistance relief service." Proposed § 322.2(h) defines "mortgage assistance relief service" to include "any service, plan or program, offered or provided in exchange for consideration on behalf of the consumer, that is represented, expressly or by implication, to assist or attempt to assist the consumer" negotiate a modification of any term of a loan or obtain other types of relief to avoid delinquency or

*Loan Modification Shop, Inc.*, No. 3:09-cv-00798 (JAP), Mem. Supp. TRO at 14 (D.N.J. filed Aug. 4, 2009) (alleging that defendants misrepresent "that it is an attorney-based company"); *see also FTC v. LucasLawCenter "Inc.,"* No. SACV-09-770 DOC (ANX), Mem. Supp. App. TRO at 19 (C.D. Cal. filed July 7, 2009) (alleging that "[d]espite promises to the contrary, consumers have no contact with the purported attorneys who are supposed to be negotiating with their lenders").

[67] *See, e.g., FTC v. Truman Foreclosure Assistance, LLC*, No. 09-23543 (S.D. Fla. filed Nov. 23, 2009); *FTC v. Washington Data Res., Inc.*, No. 8:09-cv-02309-SDM-TBM (M.D. Fla. filed Nov. 12, 2009); *see also, e.g., FTC v. US Foreclosure Relief Corp.*, No. SACV09-768 JVS (MGX), Prelim. Rep. Temp. Receiver at 2-3 (C.D. Cal. filed July 7, 2009) (stating that defendants' "relationship with two different lawyers was nominal at best and served primarily as a cover to dignify the business and invoke the attorney exception to advance fee prohibitions").

[68] *See, e.g.*, IL AG at 1 (noting that "33 percent of the [MARS] companies we have dealt with are owned by attorneys, while 38 percent have some link to the legal profession"); CRC at 2 ("An increasing number of attorneys are involving themselves in these unethical practices without providing any legal (or other) services. . . ."); MN AG at 5 ("This Office is aware of several loan modification and foreclosure rescue companies that have affiliated with licensed attorneys in other states in an effort to circumvent state law."); NAAG at 4 ("Attorneys. . . have an increasing presence in this industry and have been found working in conjunction with or serving as referral sources for mortgage consultants."); *see also, e.g.*, Legislative Solutions for Preventing Loan Modification and Foreclosure Rescue Fraud, 111th Cong. 1st Sess., Testimony of Scott J. Drexel (State Bar of California) at 2, 4 (Drexel Testimony) (noting that attorney misconduct in connection with MARS "is a problem of extremely significant – if not crisis – proportions in California," and that the state bar has initiated over 175 associated investigations of attorneys); Polyana Da Costa, *Record Number of Complaints Target Florida Loan Modification Lawyers*, Law.com (Oct. 1, 2009) ("The [Florida] state attorney general has received a record 756 complaints through August of this year about loan modifications involving attorneys."), *available at* (*http://www.law.com/jsp/law/LawArticleFriendly.jsp?id=1202434223147*).

[69] *See* Appendix B.

[70] 16 CFR 310.1, *et seq.* (2003); *see, e.g., FTC v. Kirkland Young, LLC*, No. 09-23507 (S.D. Fla. filed Nov. 18, 2009); *FTC v. Washington Data Res., Inc.*, No. 8:09-cv-02309-SDM-TBM (M.D. Fla. filed Nov. 12, 2009); *FTC v. First Universal Lending, LLC*, No. 09-CV-82322 (S.D. Fla. filed Nov. 24, 2009);*FTC v. Fed. Housing Modification Dep't*, No. 09-CV-01753 (D.D.C. filed Sept. 15, 2009); *FTC v. Hope Now Modifications, LLC*, No. 1:09-cv-01204-JBX-JS (D.N.J. filed Sept. 14, 2009); *FTC v. US Foreclosure Relief Corp.*, No. SACV09-768 JVS (MGX) (C.D. Cal. filed July 7, 2009).

[71] *See* Press Release, FTC, *Federal and State Agencies Target Mortgage Foreclosure Rescue and Loan Modification Scams* (July 15, 2009), *available at* (*http://www.ftc.gov/opa/2009/07/loanlies.shtm*); Press Release, FTC, *Federal and State Agencies Crack Down on Mortgage Modification and Foreclosure Rescue Scams* (Apr. 6, 2009), *available at* (*http://www.ftc.gov/opa/2009/04/hud.shtm*).

[72] Press Release, FTC, *Federal and State Agencies Target Mortgage Relief Scams* (Nov. 24, 2009), *available at* (*http://www.ftc.gov/opa/2009/11/stolenhope.shtm*).

[73] Press Release, FTC, *Federal and State Agencies Target Mortgage Foreclosure Rescue and Loan Modification Scams* (July 15, 2009), *available at* (*http://www.ftc.gov/opa/2009/07/loanlies.shtm*).

[74] Press Release, FTC, *Federal and State Agencies Crack Down on Mortgage Modification and Foreclosure Rescue Scams* (Apr. 6, 2009), *available at* (*http://www.ftc.gov/opa/2009/04/hud.shtm*). In connection with these joint efforts, the Commission also sent warning letters to 71 companies for marketing potentially deceptive mortgage loan modification and foreclosure assistance programs. *Id.*

[75] NAAG at 4; *see also* IL AG at 1 (noting that Illinois has over 240 open investigations of MARS providers and filed 28 lawsuits against them).

[76] To date, at least 29 states and the District of Columbia have enacted such statutes or regulations. *See, e.g.*, Cal. Civ. Code §§ 2944.7 & 2945, *et seq.*; Colo. Rev. Stat. § 6-1-1101, *et seq.*; 2009 Conn. Gen. Stat. § 36a-489; 6 Del. Code Ann. § 2400B, *et seq.*; D.C. Code § 42-2431, *et seq.*; Fla. Stat. § 501.1377; Haw. Rev. Stat. § 480E-1, *et seq.*; Idaho Code Ann. § 45-1601, *et seq.*; 765 Ill. Comp. Stat. Ann. 940/1, *et seq.*; 24 Ind. Admin. Code § 5.5-1-1, *et seq.*; Iowa Code § 741E.1, *et seq.*; Me. Rev. Stat. Ann. tit. 32, §§ 6171, *et seq.* & 6191, *et seq.*; Md. Code Ann., Real Property § 7-301, *et seq.*; 940 Mass. Code Regs. § 25.01, *et seq.*; Mich. Comp. Law § 445.1822, *et seq.*; Minn. Stat. § 325N.01, *et seq.*; Mo. Rev. Stat. § 407.935, *et seq.*; Neb. Rev. Stat. § 76-2701, *et seq.*; Nev. Rev. Stat. § 645F.300, *et seq.*; N.H. Rev. Stat. Ann. § 479-B:1, *et seq.*; N.Y. Real Prop. Law § 265-b; N.C. Gen. Stat. § 14-423, *et seq.*; 2008 Or. Laws Ch. 19; R.I. Gen. Laws § 5-79-1, *et seq.*; Tenn. Code Ann. § 47-18-5501, *et seq.*; Va. Code Ann. § 59.1-200.1; Wash. Rev. Code § 19.134.010, *et seq.*; Wis. Stat. § 846.45.

foreclosure. Proposed § 322.2(h)(2) provides that the term "mortgage assistance relief services" includes any service marketed to "stop[], prevent[], or postpone[] any (i) mortgage or deed of trust foreclosure sale for a dwelling or (ii) repossession of the consumers' dwelling; or otherwise save the consumer's home from foreclosure or repossession." Proposed §§ 322.2(h)(3)-(7) further define these services to include offers purported to assist consumers in obtaining: (1) a forbearance or repayment plan; (2) an extension of time to cure default, reinstate a loan, or redeem a property;[77] (3) a waiver of an acceleration clause or balloon payment; and (4) a short sale, deed-in-lieu of foreclosure, or any other disposition of the property except a sale to a third-party that is not the loan holder. Accordingly, proposed § 322.2(h) is intended to apply to every solution that may be marketed by covered providers to financially distressed consumers as a means to avoid foreclosure or save their homes.

One example of this coverage is the marketing of sale-leaseback or title-reconveyance transactions, which commonly are touted to consumers as a means to avert foreclosure or its consequences.[78] As a general matter, the FTC does not intend the proposed Rule to address how title-transfer transactions are regulated. The Commission recognizes that there are many comprehensive state laws that govern these types of transactions and impose specific requirements when title transfers occur.[79] To the extent sale-leaseback and title-reconveyance transactions are marketed as a means to avoid foreclosure, however, these purported services would be covered by the proposed Rule. The Commission specifically solicits comment on how the proposed Rule should apply to these types of transactions, especially in light of existing state laws.

As a general matter, mortgage brokers are covered by the proposed Rule to the extent that they market "mortgage assistance relief services."[80] The Commission does not intend the proposed Rule to apply to bona fide loan origination or refinancing services that mortgage brokers frequently offer. To obtain a new loan or refinance an existing loan, consumers can work either with the lender directly or with a mortgage broker who acts as an intermediary between the consumer and lender. Mortgage brokers can provide the benefit of offering consumers a wider choice of loan products from different lenders, without consumers having to deal with each lender separately.[81] Homeowners who are delinquent on their loans may be among the consumers whom mortgage brokers assist by helping them refinance their loans.

The Commission is mindful that consumers at risk of foreclosure could benefit from assistance in refinancing, and does not wish the proposed Rule to reduce the availability of legitimate services of this kind. At the same time, the Commission is concerned that services purported to help consumers obtain refinancing could be marketed deceptively as a means to avoid foreclosure.[82] Mortgage brokers or others could deceive consumers into paying large, up-front fees for loan origination or refinancing services based on false promises that consumers will be able to save their homes. Thus, the Commission solicits comment on how the proposed Rule should treat offers from mortgage brokers to work with lenders to negotiate new loans or refinance existing loans.

Finally, mortgage assistance relief services are limited to services that are marketed to consumers[83] who owe on loans secured by a "dwelling" or residence. A "dwelling" is defined to be a residential structure containing four or fewer units, whether or not it is attached to real property. The term dwelling also includes individual condominium units, cooperative units, mobile homes, or trailers.[84] On the other hand, the proposed Rule is not intended to cover MARS offered to borrowers whose loans are secured by commercial properties. The definition of "dwelling" applies only to residences that are "primarily for personal, family, or household purposes."[85] Based on its law enforcement experience, the Commission believes that there are consumers who may own a second home or a rental property and seek help to avoid foreclosure on these properties. Therefore, the Commission intends the proposed Rule to apply to mortgage assistance relief services marketed to these consumers.

2. Section 322.2(c): "Clear and Prominent"

The proposed Rule mandates that disclosures be made with clarity and prominence in various types of media. As discussed in more detail in Section III.D, the proposed disclosures are intended to prevent deception and allow consumers to make purchasing decisions about mortgage assistance relief services based on truthful information. The proposed Rule sets forth general requirements to ensure that the disclosures made in commercial

[77] In some states, mortgagors have the right to "redeem," *i.e.*, regain possession of, a property for a period of time following foreclosure.

[78] *See supra* note 35; *see also* NAAG at 2.

[79] *See supra* note 76. For example, some laws mandate that before doing a title transfer the foreclosure rescue operator must verify that the consumer can reasonably afford to repurchase the home. *See, e.g.*, Minn. Stat. § 325N.17(a)(1).

[80] *See* NAAG at 11-12 ("We have already seen complaints in which mortgage brokers charge consumers for mortgage consulting services and then failed to provide services or provided fewer services that originally promised. The trend of mortgage brokers providing services is likely to continue, especially if the market for mortgage loan origination remains soft.").

[81] Mortgage brokers typically are paid by the lender, and sometimes the borrower, from the closing costs of the loan transaction. *See, e.g.*, National Association of Mortgage Brokers FAQs, *available at* (*http://www.namb.org/namb/FAQs1.asp?SnID=498395277*); *see also* NAAG at 12 (noting that brokers "are traditionally paid. . . at the closing of a consumer's loan, after all services have been provided"); NCLC at 29 ("[B]rokers are normally paid only when a sale or mortgage transaction is completed.").

[82] Consumers who otherwise would not consider themselves eligible to refinance their mortgage might have a different perspective because publicized government programs such as the MHA program offer consumers the opportunity to refinance at lower interest rates, even though they are delinquent or owe more than what the home is worth.

[83] "Consumer" is broadly defined to include "any natural person who owes on any loan secured by a dwelling." Proposed § 322.2(b). The Commission intends to cover consumers at every stage of the process, and does not limit the proposed Rule to those who are in default or foreclosure. Commenters observed that many consumers seek assistance from MARS providers before they are delinquent on their loans. *See* CMC at 8 ("Many of the abuses that servicers have encountered have occurred before the consumer has received a notice of default. MARS providers sometimes solicit customers who are not in default but who live in areas with high numbers of distressed borrowers. Any rule should apply to MARS providers at any stage of the process."); CFA at 4 ("Many homeowners have sought help from MARS before entering default, though sometimes the MARS then encourages a default. . . . The mortgage servicing industry and others have urged homeowners to seek help before they go into default."); NCRC at 2 (noting that there are "[c]ompanies claiming to offer assistance with loan modifications, to consumers who may or may not be in default"); *see also* NAAG at 11 ("The [state] requirement that consumers be in default before statutory protections begin made sense when mortgage consultants solicited business based on foreclosure filings, as those consumers would necessarily be in default. Mortgage consultants are now able to mine public information to target consumers who are not yet in default. Consultants may rely on an internet presence to draw in consumers who may also not be in default. As consumers have grown more concerned about the state of the economy, these solicitations are proving increasingly attractive. Based on these reasons, a rule should provide as much coverage for consumers as possible.").

[84] Proposed § 322.2(d). The definition for dwelling is based on that used in Regulation Z, 12 CFR 226, which implements the Truth in Lending Act, 15 USC 1601 *et seq.* 12 CFR 226.2(a)(19) (2009).

[85] This language is derived from Regulation Z. *See* 12 CFR at 226.2(a)(12) (definition of "consumer credit").

communications[86] are sufficiently clear and prominent for consumers to notice and comprehend them.[87] In all cases, disclosures are required to use syntax and wording that consumers easily can understand, and cannot be accompanied with statements that contradict or confuse their meaning.[88] The proposed Rule intends to prevent MARS providers from undermining required disclosures with contradictory or obscuring information. In addition, as described below, there are clear and prominent requirements that are specific to the particular media in which disclosures appear. In the Commission's view, the extensive record of deception in the MARS industry makes it necessary to articulate with specificity how MARS providers must make required disclosures to consumers.

a. Written Disclosures

Proposed § 322.2(c)(1) sets forth various requirements for disclosures disseminated in print or written form. This includes consumer communications that appear in print publications or on a computer screen. For such disclosures, the proposed Rule specifies that the disclosure must be in a color that readily contrasts with the background of the consumer communication,[89] be in the same language predominant in the communication,[90] and appear parallel to the base of the communication.[91] Unless otherwise specified in the proposed Rule, the text size must be the larger of 12-point font or one-half the size of the largest letter or numeral of any company website or telephone number that is displayed in the consumer communication.[92] If there is no website or telephone number displayed in a communication touting mortgage assistance relief services, the disclosures must be in at least 12-point type. The text-size requirements of the proposed Rule are comparable to those of the FTC's Trade Regulation Rule Pursuant to the Telephone Disclosure and Dispute Resolution Act of 1992 ("900 Number Rule"), except for the 12-point type default.[93]

b. Audio Disclosures

Proposed § 322.2(c)(2) addresses the use of disclosures in audio communications such as broadcast radio or streaming radio. The disclosure must be delivered in a slow and deliberate manner, at a reasonable volume, and at a slow enough pace to be heard and understood.[94]

c. Video Disclosures

Proposed § 322.2(c)(3) imposes requirements for consumer communications disseminated through video means. This includes video communications that appear on television or are streamed over the Internet. As a threshold matter, these communications must be delivered in accordance with the requirements for written and audio disclosures in proposed §§ 322.2(c)(1) and (2). In addition, the communication must include a simultaneous audio and visual disclosure,[95] the latter of which must be displayed for at least the duration of the oral disclosure and comprise four percent of the vertical picture height of the screen.[96]

d. Interactive Media

Proposed § 322.2(c)(4) addresses how disclosures must be made in interactive media formats, such as software, the Internet, or mobile media. The disclosures must conform with the requirements for written, audio, and video disclosures set forth in other parts of the "clear and prominent" definition. In addition, the disclosure must appear on a separate landing page immediately prior to the consumer incurring a financial obligation, be visible to the consumer without the need to scroll down any page, and be at least twice the type size of any hyperlink to the company's website. Further, the landing page cannot contain any information other than the disclosure statement. These requirements are intended to ensure that consumers see the information conveyed in the disclosures mandated by the proposed Rule at the time they are deciding whether to purchase a mortgage relief assistance

[86] As defined in the proposed Rule, "commercial communication" is intended to include any written or verbal statement, illustration, or other depiction used to induce the purchase of goods or services. *See* Proposed § 322.2(a).

[87] Where possible, in formulating the requirements of the proposed Rule, the Commission has drawn from comparable FTC rules requiring clear and prominent disclosures. *See* Disclosure Requirements and Prohibitions Concerning Franchising, 16 CFR 436.6 (2007) (Franchise Rule); Disclosure Requirements and Prohibitions Concerning Business Opportunities, 16 CFR 437.1 (2007) (Business Opportunity Rule); Regulations Under Section 4 of the Fair Packaging and Labeling Act, 16 CFR 500.4 (1994) (Fair Packaging and Labeling Act Regulations); Trade Regulation Pursuant to the Telephone Disclosure and Dispute Resolution Act of 1992, 16 CFR 308.2 (1993) (900 Rule); Rule Concerning Cooling-Off Period for Sales Made at Home or at Certain Other Locations, 16 CFR 429.1 (1988) (Door-to-Door Sales Rule). The disclosure requirements also are consistent with those in many FTC orders. *See, e.g.*, *Sears Holding Mgmt. Co.*, Docket No. C-4264, File No. 082-3099 (FTC Sept. 9, 2009), *available at* (*http://www.ftc.gov/os/caselist/0823099/090604searsdo.pdf*).

[88] *See* 900 Rule, 16 CFR 308.3(a)(5); Franchise Rule, 16 CFR 436.9(a); Business Opportunity Rule, 16 CFR 437.1(a)(21) (prohibits making any oral, visual, or written representation that contradicts the information required to be disclosed by the Rule).

[89] *See, e.g.*, *Tender Corp.*, Docket No. C-4261, File No. 082-3188 (FTC July 17, 2009), *available at* (*http://www.ftc.gov/os/caselist/0823188/090717tenderdo.pdf*) (stating that disclosures must appear "in print that contrasts with the background against which it appears"); *Budget Rent-A-Car-System, Inc.*, Docket No.C-4212, File No. 062-3042 (FTC Jan. 4, 2008), *available at* (*http://www.ftc.gov/os/caselist/0623042/080104do.pdf*) (same); *see also* FTC, *Dot Com Disclosures: Information about Online Advertising* 12 (2000), *available at* (*http://www.ftc.gov/bcp/edu/pubs/business/ecommerce/bus41.pdf*) ("*Dot Com Disclosures*") ("A disclosure in a color that contrasts with the background emphasizes the text of the disclosure and makes it more noticeable. Information in a color that blends in with the background of the advertisement is likely to be missed.").

[90] *See, e.g.*, 900 Rule, 16 CFR 308.3(a)(1). If the ad has substantial material in more than one language, the proposed MARS Rule requires that the disclosure be delivered in each such language. Proposed § 322.2(c)(1).

[91] *See, e.g.*, *Swisher Int'l, Inc.*, Docket No. C-3964, File No. 002-3199 (FTC Aug. 25, 2000), *available at* (*http://www.ftc.gov/os/2000/08/swisherdo.htm*) (finding that warnings for cigars must appear "parallel. . . to the base of the. . . advertisement"); Fair Packaging and Labeling Act Regulations, 16 CFR 500.4(b) (requiring that identification for packaged goods must appear "in lines generally parallel to the base on which the packaging or commodity rests as it is designed to be displayed").

[92] There are additional and qualifying requirements for disclosures mandated in §§ 322.4(b) and (c) of the proposed Rule.

[93] *See* 900 Rule, 16 CFR 308.

[94] *See, e.g.*, *Sears Holding*, Docket No. C-4264 (stating that audio disclosures must be made "in a volume and cadence sufficient for an ordinary consumer to hear and comprehend them"); *Darden Rests., Inc.*, Docket No. C-4189, File No. 062-3112 (FTC May 11, 2009), *available at* (*http://www.ftc.gov/os/caselist/0623112/070510do0623112c4189.pdf*) (same); *In re Kmart Corp.*, Docket No. C-4197, File No. 062-3112 (FTC Aug. 15, 2007), *available at* (*http://www.ftc.gov/os/caselist/0623088/0623088do.pdf*) (same); *In re Palm, Inc.*, Docket No. C-4044, File No. 002-3222 (FTC Apr. 19, 2002), *available at* (*http://www.ftc.gov/os/caselist/0023332/index.shtm*) (same); *Dot Com Disclosures* at 14 (explaining that audio disclosures should be "in a volume and cadence sufficient for a reasonable consumer to hear and comprehend it").

[95] Disclosures are more effective if they are made in both the visual and audio part of a consumer communication. *See generally* Maria Grubbs Hoy & J. Craig Andrews, *Adherence of Prime-Time Televised Advertising Disclosures to the* "*Clear and Conspicuous*" *Standard: 1990 Versus 2002*, 23 J. Mktg. Pub. Pol. 170 (2004) (stating that "dual modality" disclosures – oral and visual together – are more effective at communicating information to consumers); *see also In re Kraft, Inc.*, 114 F.T.C. 40 (1991), *aff'd*, 970 F.2d 311 (7th Cir. 1992) (finding that a visual disclosure alone was unlikely to be effective as a corrective measure in light of "the distracting visual and audio elements and the brief appearance of a complex superscript in the middle of the commercial").

[96] *See* Federal Election Commission Rules: Contributions and Expenditure Limitations and Prohibitions, 11 CFR 110.11(c)(3)(iii)(B)-(C) (statement concerning funding source for political ads "must appear in letters equal to or greater than four (4) percent of the vertical picture height" and "be visible for a period of at least (4) four seconds").

service.[97] Without the use of a separate landing page, the Commission is concerned that the disclosure could be presented in such a way that the consumer might not see it or would be distracted with competing messages. For example, consumers often close out pop-up screens without actually viewing them.[98] The Commission seeks comment on whether use of a separate landing page is an effective method of conveying the required disclosures to consumers or whether another means should be used.

e. Program-length media

Proposed § 322.2(c)(6) requires that disclosures in program-length television, radio, and Internet-based advertisements for mortgage assistance relief services be presented at the beginning, near the middle, and at the end of the advertisement.[99] Requiring that disclosures be delivered at different stages of the broadcast better ensures that consumers who tune in at various times will receive them.

3. Section 322.2(i): "Mortgage Assistance Relief Service Provider"

Under proposed § 322.2(i), any person who "provides, offers to provide, or arranges others to provide, any mortgage assistance relief service" is a "mortgage assistance relief provider" subject to the proposed Rule. Proposed §§ 322.2(i)(1) and (2), however, generally exclude loan holders,[100] servicers,[101] and the agents of such holders and servicers, from the definition of a MARS provider. In the ANPR, the Commission stated that this rulemaking would address "the practices of entities (other than mortgage servicers) who offer assistance to consumers in dealing with owners or servicers of their loans to modify them or avoid foreclosure."[102] A number of the public comments expressed concern that servicers (who are bona fide intermediaries between the loan holder and the consumer) may offer loss mitigation services that fall within the scope of the proposed Rule.[103] For example, a servicer may notify a consumer of her eligibility for a mortgage loan modification under the MHA Program and assist her in submitting the necessary paperwork. In addition, lenders and servicers may outsource these functions to other parties, especially given the current large number of consumers needing assistance.[104]

Commenters asserted that loan owners and servicers should be exempt from the proposed Rule for several reasons. First, servicers tend not to be engaged in the types of deceptive and unfair conduct described in the ANPR and this document, and are not likely to engage in such activities in the future.[105] Second, servicers do not commonly charge significant up-front fees in exchange for working with consumers.[106] Third, application of the proposed Rule to servicers could restrict or interfere with lenders' and servicers' efforts to inform consumers of loss mitigation options and handle their requests for relief.[107] The Commission wishes to avoid discouraging foreclosure solutions that may be beneficial to consumers.[108] Thus, the proposed Rule generally exempts loan holders and servicers and their agents.[109] The Commission seeks comment on the exemption, including whether servicers have engaged in covered conduct that warrants encompassing them within the proposed Rule.

Finally, § 322.2(e)(3) exempts nonprofit entities excluded from the FTC's jurisdiction under the FTC Act.[110] The Commission intends for this exemption to include bona fide nonprofit housing counselors presently offering mortgage assistance relief services.[111] The FTC, however, does have jurisdiction over purported nonprofits that, in reality, operate for the profit of their members,[112] and proposed § 322.2(e)(3) does not exempt these entities.

*C. Section 322.3: Prohibited Representations*

Proposed § 322.3 addresses deceptive or unfair representations that MARS providers commonly make in marketing their services.

1. Section 322:3(a): Prohibited Statements

Proposed § 322.3(a) prohibits MARS providers from instructing consumers to cease communicating with their lenders or servicers. As discussed above, if consumers comply with this instruction and stop communicating with their lenders and servicers, consumers may not discover that their MARS provider is doing little or nothing on their behalf, may never learn of concessions their lender or servicer is willing to make, or, worst of all, may never be informed that foreclosure is imminent. The Commission is not aware of any benefits to consumers or competition from MARS providers directing consumers to

[97] *See Dot Com Disclosures* at 11 (explaining that disclosures are more likely to be effective if they are provided when the consumer is considering the purchase).

[98] *See, e.g.*, Tom Espiner, *Web Users Ignoring Security Certificate Warnings*, CNET.com (July 28, 2009), *available at* (*http://news.cnet.com/8301-1009_3-10297264-83.html*) ("In an online study conducted among 409 participants, the [Carnegie Mellon University] researchers found that the majority of respondents would ignore [pop-up] warnings about an expired Secure Sockets Layer (SSL) certificate.").

[99] Section 308.3(a)(6) of the 900 Rule has a nearly identical requirement. 16 CFR 308.3(a)(6).

[100] The proposed Rule defines "dwelling loan holder" to mean "a person that holds a loan secured by a dwelling." Proposed § 322.2(f).

[101] "Servicer" is defined in proposed § 322.2(j) as "the person responsible for receiving any scheduled periodic payments from a consumer pursuant to the terms of any dwelling loan, including amounts for escrow accounts under Section 10 of the Real Estate Settlement Procedures Act (RESPA), 12 U.S.C. 2609, and making the payments to the owner of the loan or other third parties of principal and interest and such other payments with respect to the amounts received from the borrower as may be required pursuant to the terms of the mortgage servicing loan documents or servicing contract." This definition tracks that of the servicer definition in the Real Estate Settlement Procedures Act. *See* 12 U.S.C. 2605(i).

[102] *MARS ANPR*, 74 FR at 26131. Note that the Commission is currently engaged in the MAP Rulemaking, which will address servicing practices.

[103] *See, e.g.*, CMC at 5 ("Servicers are increasingly turning to third-party service-providers to assist them in processing loan modifications and in other loss-mitigation activities."); ABA at 4-6; AFSA at 3, 5; MBA at 4.

[104] *See, e.g.*, David Lawder, *Few US mortgage modifications made permanent*, Reuters, *available at* (*http://www.reuters.com/article/idUSN1021463420091210*) (Dec. 10, 2009) (referring to a company that "has been hired by some of the largest U.S. banks to assist in modification efforts").

[105] *See, e.g.*, ABA at 6; AFSA at 3; HPC at 2; *see also* NAAG at 13 ("We are unaware of any banks, thrifts or federal credit unions engaged in for-profit loan modification or foreclosure rescue services, aside from negotiating loan modifications for consumers whose loans they are servicing."); OH AG at 5.

[106] *See, e.g.*, ABA at 5; AFSA 3-4; CMC at 4-5; MBA at 4; HPC at 2.

[107] *See, e.g.*, MBA at 4.

[108] Further, application of the advance fee ban provision, discussed *infra* § III.E, to servicers could interfere with their primary business function, collecting and processing scheduled loan payments on behalf of lenders. *See* Proposed § 322.5.

[109] Note that proposed § 322.2(i) does not exempt agents of loan holders and servicers if they "claim, demand, charge, collect, or receive any money or other valuable consideration from the borrower for the agent's benefit." The limiting language ensures that MARS providers do not evade the Rule by styling themselves as "agents" of the lender or servicer. Thus, the exemption only applies to functions an agent undertakes on behalf of the lender or servicer but not on its own behalf.

[110] Section 5(a)(2) of the FTC Act states: ''The Commission is hereby empowered and directed to prevent persons, partnerships, or corporations. . . from using unfair or deceptive acts or practices in or affecting commerce.'' 15 U.S.C. 45(a)(2). Section 4 of the Act defines ''corporation'' to include: ''any company, trust, so-called Massachusetts trust, or association, incorporated or unincorporated, *which is organized to carry on business for its own profit or that of its members*. . . .'' 15 U.S.C. 44 (emphasis added).

[111] These nonprofit services are described in more detail in Section II.C. of the ANPR. *MARS ANPR*, 74 FR 26135.

[112] *See, e.g.*, *AMA v. FTC*, 638 F.2d 443 (2d Cir. 1980), *aff'd by equally divided Court*, 455 U.S. 676 (1982); *FTC v. Ameridebt, Inc.*, 343 F. Supp. 2d 451 (D. Md. 2004).

stop communicating with their lenders or servicers. Consumers cannot reasonably avoid the injury from this practice because many of them do not know of the potentially adverse consequences that could occur from ceasing such communications. Nor are there any countervailing benefits to consumers or competition from this practice. Accordingly, the Commission believes that it is an unfair practice for MARS providers to convey such an instruction to consumers. In addition, prohibiting this practice is reasonably related to the goal of preventing MARS providers from deceiving consumers by hiding from them the actions they have or have not taken on consumers' behalf.

2. Section 322.3(b): Prohibited Misrepresentations

Proposed § 322.3(b) prohibits misrepresentations of any material aspect of any mortgage assistance relief service. Proposed §§ 322.3(b)(1)-(8) sets forth a non-exclusive list of specific aspects of a mortgage assistance relief service about which misrepresentations would violate the proposed Rule. These aspects include the likelihood and time to provide services or obtain results; the affiliation of the provider with public or private entities; payment and other obligations under existing mortgage loans; the MARS provider's refund and cancellation policies; and the completion of promised services. This list tracks the types of false or misleading claims that the Commission and the states have challenged in law enforcement actions, as described above.

A claim is "deceptive" under Section 5 of the FTC Act if there is "a representation or omission of fact that is likely to mislead consumers acting reasonably under the circumstances, and that representation or omission is material."[113] Misrepresentations of material fact are deceptive practices under Section 5. The aspects of MARS specified in §§ 323.3(b)(1)-(7) of the proposed Rule are material to consumers because they pertain to the cost, central characteristics, efficacy or other attributes of such services that are important to consumers.[114] Thus, the misrepresentations proposed § 323.3(b) prohibits constitute deceptive practices under the FTC Act.

*D. Section 322.4: Required Disclosures*

Section 322.4 of the proposed Rule requires that MARS providers disclose information to consumers to assist them in making decisions about mortgage assistance relief services. First, proposed § 322.4(a) requires MARS providers to disclose clearly and prominently[115] in all of their commercial communications with consumers that they are for-profit businesses not associated with the government, and that neither the government nor the lender has approved the MARS provider's offer of services. The Commission intends for this disclosure to apply to all advertisements and other marketing materials directed at a general audience.

In addition, proposed § 322.4(b) requires that MARS providers disclose in all commercial communications directed to specific consumers, clearly and prominently and prior to consummating any agreement with the consumer, that: (1) the provider is a for-profit business not associated with the government, and neither the government nor the consumer's lender endorses its service; (2) the total amount consumers will have to pay to purchase, receive, and use the service; and (3) even if consumers buy the provider's service, there is no guarantee that their lender will agree to change their loan terms. The Commission intends these three disclosures to be made in every promotional communication between the MARS provider and a specific consumer that occurs prior to such consumer incurring any financial obligations.[116] The Commission believes it is appropriate to require the disclaimer disavowing any affiliation with the government or the consumer's lender not only in general advertising, but in ensuing promotional communications with consumers as well. Otherwise, MARS providers could qualify or contradict this disclaimer during subsequent telemarketing calls or other communications with individual consumers, which the FTC's enforcement experience indicates is common practice.[117]

First, as described above, there are many government, nonprofit, and for-profit programs operating in the marketplace that provide a wide array of mortgage assistance relief services. In addition, the Commission and state law enforcement officials have brought numerous law enforcement actions against MARS providers who have misrepresented their affiliation with a government agency, a lender, a servicer, or others in connection with offering mortgage assistance relief services. These providers have used a variety of techniques to create such misimpressions, including adopting trade names that resemble the names of legitimate government programs.[118] Given the variety of entities that provide such services and the prevalence of these deceptive claims, the Commission believes that the requirement that MARS providers disclose their for-profit status and nonaffiliation with government or other programs is reasonably related to the goal of preventing deception.

Second, the total cost of the mortgage assistance relief services is perhaps the most material information for consumers in making well-informed decisions whether to purchase those services. Requiring the clear and prominent disclosure of total cost information in every communication directed at a specific consumer prior to the consumer entering into an agreement makes it less likely that MARS providers will deceive prospective customers with incomplete, inaccurate, or confusing cost information.[119] The Commission therefore believes that requiring MARS providers to disclose total cost information clearly and prominently is reasonably related to the prevention of deception.

Third, in light of the history of deceptive success claims in this industry and the many widely-publicized government programs to help consumers seeking relief from lenders, consumers are likely to overestimate their abilities to obtain substantial loan modifications or other mortgage relief from MARS providers, even in the absence of specific misrepresentations of success. Therefore, the Commission believes that requiring MARS providers to disclose clearly and prominently in all commercial communications with prospective customers that their lenders may not agree to change their loan even if consumers purchase the services the

[113] *In re Cliffdale Assocs., Inc.*, 103 F.T.C. 110, 164-66, 175-76 (1984). Information is "material" if it is "likely to affect a consumer's choice of or conduct regarding a product." *Id.* at 165.

[114] *Id.* at 182-83.

[115] The disclosure must be made in a manner that conforms with the definition of "clear and prominent" in proposed § 322.2(c). *See supra* § III.B.2.

[116] As discussed in Section II.B, often MARS providers disseminate advertisements that instruct consumers to call a telephone number or contact an email address, and once consumers do so MARS providers begin to interact with them on an individual level.

[117] *See, e.g.*, *FTC v. Fed. Loan Modification Law Ctr., LLP*, No. SACV09-401 CJC (MLGx) (C.D. Cal. filed Apr. 3, 2009) (false success rate claims and other deceptive claims often made during telemarketing calls with consumers); *FTC v. Loss Mitigation Servs., Inc.*, No. SACV09-800 DOC (ANX) (C.D. Cal. filed July 13, 2009) (same).

[118] *See supra* note 56.

[119] An incidental benefit of requiring that MARS providers disclose total cost clearly and prominently is that such transparency may facilitate the efforts of consumers to comparison shop among MARS providers based on cost, which would be beneficial to consumers and competition.

MARS provider offers is reasonably related to preventing deception.

The Commission has not conducted any empirical research into whether the disclosures that are specified in the proposed Rule would be an effective means of conveying information about the status, cost, and limitations of MARS. The Commission intends to study the effectiveness of any proposed disclosures in preventing consumer deception. To aid its analysis, the Commission seeks comment and data bearing on the costs and benefits of the disclosure requirements articulated in the proposed Rule.

*E. Section 322.5: Prohibition on Collection of Advance Fees*

The Commission proposes to ban MARS providers from requiring that consumers pay in advance for their services, *i.e.*, prior to the provider doing or accomplishing what it promised. This remedy is justified on two independent grounds: (1) that the collection of advance fees by MARS providers is an unfair act or practice and (2) that the prohibition is reasonably related to the goal of preventing deception. It is also strongly supported by the public comments submitted by law enforcers, consumer groups, and financial service businesses.[120]

1. Advance Payments as an Unfair Act or Practice

Under Section 5(n) of the FTC Act, an act or practice is unfair if: (1) it causes or is likely to cause substantial injury to consumers; (2) that injury is not outweighed by countervailing benefits to consumers or competition; and (3) the injury is not reasonably avoidable by consumers themselves.[121] Section 5(n) also provides that the Commission may consider established public policies in determining whether an act or practice causes substantial injury, but may not use such policies as a primary basis for determining that an act or practice is unfair. The Commission believes that requiring that consumers pay advance fees for mortgage assistance relief services meets the standard for an unfair practice under Section 5(n) of the FTC Act, a conclusion that is supported by established public policies already incorporated into federal and state laws.

a. Substantial Injury to Consumers

The comments received and the Commission's law enforcement experience support the conclusion that MARS providers generally do not achieve the results that they cause consumers to expect, yet retain the money they collect in advance fees; thus, allowing providers to collect their fees in advance of achieving those results causes or is likely to cause substantial injury to consumers.

Consumers pay up-front fees for mortgage assistance relief services in amounts that range from hundreds to thousands of dollars – fees that many consumers in financial distress find difficult to pay.[122] Yet, few MARS providers perform the services or deliver the results they promise.[123] Law enforcement, both at the federal[124] and state levels,[125] as well as comments on the record of this proceeding,[126] indicate that there is a widespread failure of MARS providers to perform promised services or achieve promised results. NAAG's written comment, representing the views of state attorneys general who have monitored the activity of MARS providers throughout the country, details these failures in stark terms:

> In our experience, we have found that services provided by foreclosure rescue services companies result only in costs to consumers. There are no benefits. The companies collect an upfront fee that consumers can ill-afford to pay. Consumers then submit financial information to the companies and the companies promise to forward the information to the consumers' loan servicers and obtain a loan modification offer. In the majority of cases, the companies do nothing with the consumers' information. The consumers then end up turning to a non-profit for help, calling their servicers themselves, or falling further behind on their mortgage payments as they wait for the promised loan modification offer that never materializes.[127]

The marketplace does not appear to provide an adequate deterrent to MARS providers failing to perform on their contracts. MARS providers are often new entrants or ephemeral operations with little or no good will in their businesses and rarely provide repeat services to their customers. In these circumstances, the reputational harm from not providing promised services appears to provide little disincentive to nonperformance by MARS providers.

Consumers are especially unlikely to obtain the claimed services or results if the MARS provider has promised to obtain a mortgage loan modification that lowers consumers' monthly payments.[128] Many consumers who seek mortgage assistance from MARS providers are not eligible for the mortgage loan modifications that various government programs offer.[129]

[120] *Supra* notes 18-21.

[121] 15 U.S.C. 45(n) (codifying the Commission's unfairness analysis); *see also In re Int'l Harvester Co.*, 104 F.T.C. 949, 1079, 1074 n.3 (1984), *reprinting* Letter from the FTC to Hon. Wendell Ford and Hon. John Danforth, Committee on Commerce, Science and Transportation, United States Senate, Commission Statement of Policy on the Scope of Consumer Unfairness Jurisdiction (Dec. 17, 1980).

[122] *See, e.g.*, NCRC at 3 ("The high costs of loan modification and foreclosure rescue services may also prevent financially stressed consumers from being able to pay their regular mortgage payment, if they buy into companies' promises. If the company does not deliver, they may be unable to correct the delinquency for lack of these funds."); NAAG at 10 ("Paying the fee upfront likely means that some of the consumer's other bills will not be paid or that the consumer will have to use credit cards or funds from friends or family."); MN AG at 2 ("These advance fees often make it even more difficult for the homeowner – and the loan modification or foreclosure rescue consultant – to effectively resolve the homeowner's financial dilemma.").

[123] *See, e.g.*, *Data Med. Capital, Inc.*, No. SA-CV-99-1266 AHS (Eex), Rep. Temp. Receiver at 4 (C.D. Cal. filed June 19, 2009) (stating the defendants' records show that they provided loan modifications to only 0.37% – 3/8ths of one percent – of their customers); *see also, e.g.*, *FTC v. US Foreclosure Relief Corp.*, No. SACV09-768 JVS (MGX), Prelim. Rep. Temp. Receiver at 2 (C.D. Cal. filed July 15, 2009) ("[O]n [defendants'] applications taken since November 2008, only 11% have resulted in closed modifications."); *FTC v. LucasLawCenter "Inc.,"* No. SACV-09-770 DOC (ANX), Mem. Supp. App. TRO at 19 (C.D. Cal. filed July 7, 2009) ("Nearly every consumer who is promised a loan modification never received any offer to modify their home loans."); *FTC v. Freedom Foreclosure Prevention Specialists, LLC*, No. 2:09-cv-01167-FJM (D. Ariz. June 1, 2009) (alleging defendants only completed loan modifications for about 6% of consumers).

[124] As noted in Section II, since January 1, 2008, the Commission has filed twenty-eight actions against MARS providers for deceptive and other unlawful practices that typically resulted in their failure to provide the promised results. *See* Appendix B.

[125] *See, e.g.*, NAAG at 4 ("As of July 1, 2009, over 450 companies are or have been investigated for providing foreclosure rescue services that violated state laws. Collectively, the states participating in the NAAG group have sued at least 130 of these companies."); *id.* at 6.

[126] *See, e.g.*, NAAG at 3 ("As of July 1, 2009, the Office of the Illinois Attorney General had identified roughly 170 companies operating in Illinois that appeared to have offered or were presently offering foreclosure rescue services that violated Illinois state laws. The majority of these companies take impermissible up-front fees and then fail to deliver promised services. . . ."); MN AG at 2 ("As a general rule, these companies provide no service, or at most, simply submit paperwork to the homeowner's mortgage company."); Chase at 1 ("Chase's experience has been that MARS entities disrupt the loan modification process and provide little value in exchange for the high fees they charge.").

[127] NAAG at 6.

[128] *See, e.g.*, each case in Appendix B.

[129] *See, e.g.*, Manuel Adelino *et al.*, *Why Don't Lenders Renegotiate More Home Mortgages? Redefaults, Self-Cures, and Securitization* 3 (July 2009), *available at* (*http://www.bos.frb.org/economic/ppdp/2009/ppdp0904.pdf*) (finding that lender provided monthly payment-lowering modifications to only 3% of seriously delinquent loans in 2007and 2008); NCLC at 6 (pointing to "[o]ne analysis of statistics for modifications made

Continued

Apart from these programs, lenders and servicers often are unwilling to modify the terms of mortgage loans or forgive fees and penalties as an alternative to foreclosure.[130] Even if lenders and servicers might be amenable to a modification, many MARS providers do little or no work for their customers, neglecting to contact their lenders or servicers or failing to respond to their requests for basic information.[131]

b. Countervailing Benefits to Consumers and Competition

In analyzing whether an act or practice is unfair, the Commission considers its benefits to consumers and competition in comparison to its harms. The comments received do not demonstrate that paying in advance for mortgage assistance relief services has any benefits to consumers. MARS providers, however, have argued generally that charging fees in advance is needed to protect them against the risks of nonpayment by consumers after delivery of the services.[132] These providers point out that most consumers who purchase MARS are in financial distress, so they may not be willing or able to pay the amount owed, and that any judicial remedy against consumers for nonpayment is costly. MARS providers also argue that they require advance fees to pay their ongoing operating costs – *e.g.*, for payroll, office space, and equipment – as well as the direct costs of seeking modifications for consumers, all of which they incur prior to obtaining the modifications.[133] In short, MARS providers claim that it would be impossible or extremely difficult to provide mortgage assistance relief services if they could not charge advance fees, thus depriving consumers of the benefits of those services.

The Commission concludes that the record to date does not show that charging advance fees provides a benefit to consumers. As discussed above, few MARS providers perform the services or obtain the results promised and, therefore, consumers who pay in advance typically get nothing in return for their payments. The FTC also concludes that the record to date does not demonstrate that charging advance fees benefits competition or the extent of any such benefits, much less that any benefits to competition exceed the harms to consumers from the payment of advance fees. Nothing in the record bears on the nature and extent of the costs, if any, to MARS providers if they cannot operate without charging advance fees, *e.g.*, by capitalizing their business. For example, the record does not address whether MARS providers would be unable to recoup their costs relatively quickly – by achieving promised results for some consumers and collecting the associated fees – even if they were prohibited from charging advance fees. The information the Commission has received and reviewed also does not address the extent to which consumers would not pay the money they are obligated to pay once the services are rendered, or that there are no other means by which providers could protect themselves from the risk of nonpayment.[134] The Commission seeks comment and data bearing on the costs to MARS providers if they cannot charge advance fees for MARS, and the extent to which these costs would prevent them from offering services to consumers.

c. Reasonable Avoidability of Injury

In considering whether an act or practice is unfair, the Commission also considers whether the harm from the practice is reasonably avoidable by consumers. Consumers can only reasonably avoid harm if they understand the risk of injury from an act or practice.[135] Consumers also must have available to them an alternative means of avoiding the injury that is not unduly costly to them.[136]

There is nothing in the record that suggests consumers could reasonably avoid the substantial injury caused by having to pay advance fees for MARS. Consumers can avoid the injury only if they are aware of the risks of paying in advance. Especially in light of the prevalence of deception surrounding these services, consumers are unlikely to know of the substantial risk that the provider will not perform as promised.

MARS providers also do not appear to compete on the basis of when fee collection takes place. Based on the current record, it appears that nearly all MARS providers charge up-front fees for their services.[137] Thus, even if consumers were aware of the risk that MARS providers will not perform, as a practical matter they might not have the option of protecting themselves by choosing a provider that charges only after services are rendered. At the very least, the search costs in identifying such providers would pose a significant deterrent for consumers in financial distress. Thus, consumers who seek mortgage assistance relief services cannot reasonably avoid the substantial harm associated with being charged an advance fee for those services.

In addition, consumers who have paid in advance, only to discover that the providers have not provided the promised services or result, typically cannot mitigate their harm by seeking a refund. Most MARS providers do not provide refunds to consumers;[138] indeed, providers commonly make false claims about the availability of refunds.[139] Ultimately, many consumers

in May 2009 [which] showed that only 12% reduced the interest rate or wrote-off fees or principal").

[130] *Id.*; *see also, e.g.*, Alan M. White, *Deleveraging the American Homeowner: The Failure of 2008 Voluntary Mortgage Contract Modifications*, 41 Conn. L. Rev. 1107, 1111(2009) (arguing, *inter alia*, that "[n]o single servicer or group of servicer. . . has any incentive to organize a pause in foreclosures or organized deleveraging program to benefit the group").

[131] *See supra* notes 62-64.

[132] TNLMA at 5 ("Nearly all professions, from attorneys to accountants to personal trainers, charge advance fees. . . . The reason these other professions charge fees 'up-front' is to avoid the risk of being 'stiffed' at the end of a laboriously costly effort."). Relatedly, one commenter expressed concern that consumers could "game" a back-end fee model by rejecting the loan modification secured by the provider (in exchange for the fee) and then simply approaching the lender directly to obtain the very same modification for free. *Id.*

[133] *See, e.g.*, Gutner at 1 ("[L]oan modification is not as simple as filling out a few forms and then it is done. Loan modification is a long and involved process. . . . Loan modification companies have expenses just like any other company – payroll, lease, insurance, equipment etc."); TNLMA at 5 ("[MARS providers] incur significant costs before the consumer's mortgage is ready to be modified.").

[134] In particular, the Commission seeks comment on the costs and benefits of allowing providers to request or require that consumers place advance fees in an independent third-party escrow or trust to eliminate the risk of nonpayment.

[135] *See In re Int'l Harvester Co.*, 104 F.T.C. at 1073 (Unfairness Policy Statement); *In re Orkin Exterminating Co., Inc.*, 108 F.T.C. 263 at 366 (1986), *aff'd*, *FTC v. Orkin*, 849 F.2d 1354 (11th Cir. 1988).

[136] *In re Orkin Exterminating Co., Inc.*, 108 F.T.C. at 374-75 (Oliver, Chm., concurring).

[137] Specifically, in its law enforcement actions, the Commission has not observed any MARS providers that did not charge up-front fees to consumers. *See* Appendix B. Additionally, none of the comments submitted in response to the ANPR cite any example of MARS providers employing a different fee model.

[138] *See supra* note 59.

[139] Even if a MARS provider gave refunds, consumers would have been deprived of the use of the money they paid for their advance fee for the period of time from when the contract was signed until the refund was provided. Financially distressed consumers facing the prospect of losing their homes suffer injury from being deprived of the use of hundreds or thousands of dollars during this critical period of time when they are trying to stay current on their mortgages and pay other expenses. Thus, a refund would not eliminate the injury from having to make advance payments. It is established law under Section 5 that offering a refund is not a defense to a charge that a marketer misrepresented its product or service. *See, e.g., FTC v. Think Achievement Corp.*, 312 F.3d 259, 261-62 (7th Cir. 2002); *FTC v. Pantron I Corp.*, 33 F.3d 1088, 1103 (9th Cir. 1994); *In re Sears, Roebuck and Co.*, 95 F.T.C. 406, 518 (1980), *aff'd*, 676 F.2d 385 (9th Cir. 1982).

of mortgage assistance services are never able to recover the amount of the advance payment they made to a MARS provider who neither performed promised services nor delivered promised results.[140]

Having paid in advance and not received a refund, the only remaining recourse consumers would have for a nonperforming MARS provider is to file a lawsuit for breach of contract, hardly a viable option for financially-distressed consumers who might be facing imminent foreclosure.[141] Many consumers who are in financial distress are not sophisticated in legal matters and may not be aware that filing an action against the MARS provider for breach of contract is available as an alternative. More significantly, the cost of litigating makes it impossible or impractical for many consumers to seek legal recourse. Thus, the possibility of taking legal action does not sufficiently mitigate the harm to consumers from paying an advance fee.

Based on the forgoing analysis, the Commission believes that charging an advance fee for mortgage assistance relief services is an unfair practice. The Commission reached the same conclusion in its TSR with respect to the charging of an advance fee for credit repair services, money recovery services, and guaranteed loans or other extensions of credit.[142] As is true in this proceeding, the Commission found in the TSR proceeding that companies selling those products or services routinely misrepresented the services they would perform or the results they would achieve, and that consumers paying advance fees would incur all of the risk of nonperformance. The TSR therefore prohibits telemarketers of such products or services from charging an advance fee.[143]

d. Public Policy Concerning Advance Fees

Section 5(n) of the FTC Act permits the Commission to consider established public policies in determining whether an act or practice is unfair, although those policies cannot be the primary basis for that determination. There are strong public policies against charging advance fees for MARS as shown by the 20 or more state laws that prohibit this practice because of its adverse effect on consumers.[144] Consistent with these statutes and their law enforcement experience, 46 states filed comments strongly advocating that the Commission issue a rule that prohibit the charging of advance fees for MARS.[145] The Commission believes that these state laws provide further support for its finding that this practice is unfair.

2. The Advance Fee Ban to Help Prevent Deception

As a second basis for imposing an advance fee ban, the Commission believes that such a ban is reasonably related to the goal of protecting consumers from widespread deception in the offering of MARS. The Commission has authority not only to prohibit conduct that is itself unlawful, but also may impose additional relief that is reasonably related to restraining unlawful conduct.[146]

As detailed in Section II of this document, MARS providers commonly make claims as to the services they will provide or the results they will obtain. These claims induce consumers to pay up-front fees of hundreds or thousands of dollars for services and results the providers typically do not deliver. Because the likelihood of consumers pursuing judicial remedies against nonperformance is small, MARS providers have little incentive to perform, and in fact many do not.[147] The advance fee ban proposed in § 322.5 realigns the incentives of the MARS provider to deliver on its promises because it will not be paid until it does so.[148] Thus, the ban would help to prevent the deceptive performance claims providers frequently make.[149]

3. The Ban on Advance Payments in the Proposed Rule

Section 322.5(a) of the proposed Rule provides that:

> It is a violation of this rule for any mortgage assistance relief service provider to request or receive payment of any fee or other consideration until the provider has: (1) [a]chieved all of the results that: (i) [t]he provider represented, expressly or by implication, to the consumer that the service would achieve, and (ii) [a]re consistent with consumers' reasonable expectations about the service and (2) [p]rovided the consumer with documentation of such achieved results. . . .

The Commission intends for this provision to prevent a MARS provider from requesting or receiving any fees or any other form of compensation, including an equity stake in consumers' property, until it achieves the results that its claims cause consumers to expect or that consumers reasonably expect given the type of service sold. Thus, the performance that MARS providers must complete before collecting fees is those results that are

[140] *See, e.g.*, *Door-to-Door Sales Rule Statement of Basis and Purpose*, 40 FR at 53523 ("Consumers are clearly injured by a system which forces them to bear the full risk and burden of sales related abuses. There can be little commercial justification for such a system.").

[141] *In re Orkin Exterminating Co.*, 108 F.T.C. 263 at 374-75 (Oliver, Chmn., concurring) (suing for breach of contract is not a reasonable means for consumers to avoid injury).

[142] *See Telemarketing Sales Rule Statement of Basis and Purpose*, 68 FR 4580, 4614 (Jan. 29, 2003) *(TSR Statement of Basis and Purpose)*.

[143] *See* 16 CFR 310.4(a). Note that, although the TSR declares the charging of advance fees in this context to be "abusive" – the term used in the Telemarketing Act – the Commission used the unfairness analysis set forth in Section 5(n) of the FTC Act to support this declaration. *See TSR: Notice of Proposed Rulemaking*, 67 FR 4492, 4511 (Jan. 30, 2002).

[144] *See supra* note 76.

[145] *See* NAAG at 9; MN AG at 4; MA AG at 2; OH AG at 3.

[146] The Commission exercises similar discretion in crafting orders to resolve law violations. *Cf. FTC v. National Lead Co.*, 352 U.S. 419, 428 (1957) ("[T]he Commission is clothed with wide discretion in determining the type of order that is necessary to bring an end to the unfair practices found to exist."); *FTC v. Ruberoid*, 343 U.S. 470, 473 (1952) ("If the Commission is to attain the objectives Congress envisioned, it cannot be required to confine its road block to the narrow lane the transgressor has traveled; it must be allowed effectively to close all roads to the prohibited goal, so that its order may not be by-passed with impunity."); *Jacob Seigel Co. v. FTC*, 327 U.S. 608, 611-12 (1946) ("The Commission has wide discretion in its choice of a remedy deemed adequate to cope with the unlawful practices in this area of trade and commerce.").

[147] *See supra* notes 123-26.

[148] *See, e.g.*, NAAG at 10 ("The risk of not receiving payment provides the strongest possible incentive for mortgage consultants to promptly and adequately provide all promised services. Plus, if the consultant provides good services and the consumer obtains an affordable loan modification, the consumer should be in a better position financially to pay the consultant."); *id.* at 11 ("The incentives created for fraudulent companies to enter into this industry by allowing payment of advance fees cannot be mitigated through disclosures. The only way to ensure that companies are actually working for consumers is to require them to produce results before the consumers make payment."); NCLC at 5, 8 ("Requiring these companies to obtain the promised loan modification as a condition of being paid will substantially reduce their incentive for making false or inflated promises of foreclosure assistance."); MN AG at 4 ("A prohibition on up-front fees also provides the strongest incentive for loan modification and foreclosure rescue companies to provide adequate services. . . .").

[149] Although the proposed Rule prohibits deceptive representations and mandates certain disclosures, there is no assurance that these remedies would be effective in every case, or that all providers will abide by them. An advance fee ban thus also may be needed to prevent deception. The Commission in the TSR prohibited the collection of advance fees from credit repair services, money recovery services, and guaranteed loans or other extensions of credit even though the Rule also banned deceptive claims and required disclosures in marketing those products and services. *See* TSR, 16 CFR 310.1, *et seq.*; *TSR Statement of Basis and Purpose*, 68 FR 4580.

represented, expressly or by implication, to prospective consumers and that are consistent with the purpose for which the service is sold.

Section 322.5(1)(i) prohibits a MARS provider from collecting a fee until it has achieved each result "represented, expressly or by implication, to the consumer that the service would achieve." In determining what representations consumers take away from providers' communications, the Commission will employ its traditional tools of claims construction. Thus, an advertisement or other communication will be deemed to convey a claim if consumers, acting reasonably under the circumstances, would interpret the communication to convey that message.[150] The message may be conveyed by innuendo as well as by express statements.[151] The Commission looks to the overall, net impression created by the communication, rather than focusing on the individual elements in isolation.[152] Information intended to qualify a claim must be presented in a clear and prominent manner; fine print disclosures in advertisements or contracts generally are ineffective to change the meaning of statements that appear in the body of a communication.[153]

In addition, under § 322.5(a)(1)(ii), before a MARS provider can collect any payment, it also must achieve all those results that "are consistent with the consumers' reasonable expectations about the service." Using traditional principles of claim interpretation, the Commission believes that even general efficacy claims (*e.g.*, "our service will help you with your mortgage") are likely to convey that consumers can expect to achieve a result consistent with the purpose of the product or service,[154] that the result will be beneficial to them,[155] and that the benefit will be substantial.[156] Even in the absence of claims that a specific result will be achieved, reasonable consumers thus are likely to interpret an advertisement as promising results consistent with the purpose of the product or service.[157] The act of offering the MARS for sale obligates the provider to achieve at a minimum results that are consistent with the results consumers reasonably expect to receive from such a service.[158]

The proposed Rule mandates that providers achieve a defined result if they promise consumers a loan modification. Specifically, the Commission believes that a MARS provider's representation that it will negotiate, arrange, or obtain a loan modification (which may include modifying the interest rate, principal amount, or the term of the loan) implies to reasonable consumers that they will receive a reduction in their mortgage obligation, that the result will be permanent, and that the benefits will include a substantial decrease in the amount of their monthly payments for a meaningful period of time. Accordingly, § 322.5 provides that if a MARS provider makes an express or implied representation that it will "negotiate, obtain, or arrange a modification of any dwelling loan," it must obtain a "mortgage loan modification" for the consumer before it can collect any fee or other consideration.

Under proposed § 322.5, the required "mortgage loan modification" that must be provided prior to payment is a *permanent* contractual change to the mortgage that substantially reduces the borrower's scheduled periodic payments. The reduction must be permanent for a period of at least five years or a reduction that will become permanent once the consumer successfully completes a trial period. Many MARS providers attempt to persuade consumers to accept repayment plans or forbearance agreements as a substitute for a promised loan modification.[159] Such plans and agreements do not result in a permanent decrease in monthly payments, but tend to increase the amount that consumers owe each month on their mortgages, either immediately or in the near future when the forbearance period ends. Under the proposed Rule, a loan modification must *reduce* the consumer's scheduled periodic payments, and that reduction must be *substantial*, *i.e.*, a meaningful reduction that makes the loan affordable for that consumer.

The proposed ban on advance fees prohibits MARS providers from requesting or collecting advance fees for any represented service until *all* of the results promised, expressly or by implication, are delivered. This prevents MARS providers from charging for their services piecemeal.[160] If, for

[150] *See Kraft, Inc.*, 114 F.T.C. 40, 120 (1991), *aff'd*, 970 F.2d 311 (7th Cir. 1992).

[151] *See Fedders Corp. v. FTC*, 529 F.2d 1398, 1402-03 (2d Cir.).

[152] *See Cliffdale Assocs.*, 103 F.T.C. at 179 & n.32 (Deception Policy Statement).

[153] *Id.* at 180-81 ("Written disclosures or fine print may be insufficient to correct a misleading representation. . . . Oral statements, label disclosures or point-of-sale material will not necessarily correct a deceptive representation or omission. Thus, when the first contact between a seller and a buyer occurs through a deceptive practice, the law may be violated even if the truth is subsequently made known to the purchaser. Pro forma statements or disclaimers may not cure otherwise deceptive messages or practices."). To be effective, disclosures must be clear and conspicuous. *See, e.g.*, *Thompson Med. Co. v. FTC*, 104 F.T.C. 648 (1984), *aff'd*, 791 F.2d 189 (D.C. Cir. 1986); *United States v. Bayer Corp.*, No. CV-00-132 (D.N.J. Jan. 11, 2000) (consent decree).

[154] *FTC v. Chrysler Corp.*, 561 F.2d 357 (D.C. Cir. 1977); *Feil v. FTC*, 285 F.2d 879, 885-87 & n.19 (9th Cir. 1960); *In re J.B. Williams*, 68 F.T.C. 481, 542-43 (1965).

[155] For example, in a legitimate short sale, the property is sold for a price that is less than the debt owed on the mortgage, but the lender agrees to take this lesser amount as full satisfaction of the debt. A short sale is intended to result in less damage to a consumer's credit rating than a foreclosure. Some purported "short sales" are detrimental to consumers, however. *See, e.g.*, NCLC at 17-18 (expressing concern about "short sale" scams). Some MARS providers that purportedly help the consumer to sell the property "short" conceal the actual sale price amount from the lender, leaving the consumer liable for the difference and owing taxes on a larger forgiven balance than necessary. This would not be considered a beneficial result for the consumer, and thus the MARS provider could not collect a fee for it.

[156] An efficacy claim conveys to consumers that the result or benefit will be meaningful and not *de minimis*. *See P. Lorillard Co. v. FTC*, 186 F.2d 52, 57 (4th Cir. 1950) (challenging advertising that claimed that the cigarette was lowest in nicotine, tar and resins in part because the difference was, in fact, insignificant); *Sun Co.*, 115 F.T.C. 560 (1992) (challenging advertising for octane gasoline that represented gas would provide superior power that would be significant to consumers); Guides Concerning the Use of Endorsements and Testimonials in Advertising, 16 CFR 255.2 (2009) ("An advertisement containing an endorsement relating the experience of one or more consumers on a central or key attribute of the product or service also will likely be interpreted as representing that the endorser's experience is representative of what consumers will generally achieve with the advertised product or service in actual, albeit variable, conditions of use."); Guides for the Use of Environmental Marketing Claims,16 CFR 260.6(c) (1998) ("Marketers should avoid implications of significant environmental benefits if the benefit is in fact negligible."); *FTC Enforcement Policy Statement on Food Advertising*, 59 FR 28388, 28395 & n.96 (June 1, 1994), *available at* (*http://www.ftc.gov/bcp/policystmt/ad-food.shtm*) ("The Commission shares FDA's view that health claims should not be asserted for foods that do not significantly contribute to the claimed benefit. A claim about the benefit of a product carries with it the implication that the benefit is significant.").

[157] *See, e.g.*, *In re International Harvester Co.*, 104 F.T.C. 949, 1058-59 (1984) (implied representations may arise from "ordinary consumer expectations as to the irreducible minimum performance standards of a particular class of good," *i.e.*, "by the very act of offering goods for sale the seller impliedly represents that they are reasonably fit for their intended uses.")

[158] *Id.*

[159] *See, e.g.*, *FTC v. Loss Mitigation Servs., Inc.*, No. SACV09-800 DOC (ANX), Mem. In Supp. of Ex Parte TRO, Ex. 10 (C.D. Cal. filed July 13, 2009); *FTC v. Fed. Loan Modification Law Ctr., LLP*, No. SACV09-401 CJC (MLGx) (C.D. Cal. filed Apr. 3, 2009), Reply to Resp. Order to Show Cause at 7 (C.D. Cal. filed Apr. 22, 2009).

[160] Without such a prohibition, MARS providers might attempt to charge consumers for discrete tasks that fall short of the full service or result promised, such as collecting a fee once they conduct an initial consultation with the consumer; review or audit the consumer's mortgage loan documents; gather financial or other information from the borrower; send an application or other request to the lender or borrower; facilitate communications between the borrower or servicer;

example, consumers reasonably expect that at the end of the process they will receive a particular outcome, such as a short sale or deed-in-lieu of foreclosure transaction, the MARS provider cannot require the consumer to pay a fee for an initial consultation or subsequent fees on a periodic basis as it purportedly performs various steps to achieve that outcome. The provider cannot collect any fee until after the favorable result marketed ultimately has been achieved for the consumer.[161]

Under proposed § 322.5, MARS providers must provide the consumer with documentary proof of completed services and achieved results before requesting or collecting payment. The Commission intends for the required documentation to be the most comprehensive written instrument memorializing the loan holder's agreement to offer the represented concession to the consumer. In the case of promised loan modifications, the proposed Rule specifies that documentation must be a "written offer from the dwelling loan holder or servicer to the consumer." Likewise, the MARS provider must provide documentation in the form of a written offer from the lender or servicer setting forth other concessions, such as a forbearance agreement, short sale or deed-in-lieu of foreclosure transaction; waiver of an acceleration clause; opportunity to cure default or reinstate a loan; or repayment plan.

4. Alternatives to an Advance Fee Ban

In proposing an advance fee ban, the Commission has considered and, at this stage, decided against imposing alternative restrictions on MARS providers. However, it seeks comment on these alternatives – in particular, on whether the Commission should: (1) limit or cap advance fees instead of banning them outright; (2) allow MARS providers to use independent third-party escrow accounts to hold fees until they achieve the results; and (3) include a right of rescission.

First, the Commission seeks comment on whether, instead of banning fees outright, the proposed Rule should permit MARS providers to charge a small up-front fee or to collect fees as they perform services preliminary to obtaining the result that are commensurate with those services.[162] As detailed above, the FTC believes that charging hundreds or thousands of dollars in advance for MARS is unjustified based on the current record. However, the Commission seeks comment on whether there are MARS providers currently operating that charge a small up-front fee (such as $50 - $100) or collect fees as they perform preliminary services, and then successfully deliver results to their customers. Based on the current record, the FTC is not aware of such entities.

Second, the Commission seeks comment on whether, in the event the Rule bans advance fees, MARS providers should be allowed to request or require that consumers place any such fees in an escrow account. Under this approach, an escrow agent could administer the account to ensure that MARS providers receive payment if and only if they successfully provide the ultimate results. Based on the Commission's law enforcement experience, as well as the views of state law enforcement officials and consumer groups,[163] however, the Commission is concerned that MARS providers might improperly obtain access to MARS funds in escrow accounts.[164] The Commission seeks comment on whether escrow accounts protect consumers adequately in other types of financial transactions, whether such escrows could be used in the context of mortgage assistance relief services and, if so, what restrictions or limitations should be placed on their use.

Third, the Commission seeks comment on whether the proposed Rule should include a right of rescission. A right of rescission, often called a "cooling-off period," would allow consumers to cancel their agreements with a MARS provider for a certain period after entering into the agreement. Several commenters recommended that the Commission include such a provision in the proposed Rule.[165] Additionally, most state MARS statutes provide a right of cancellation.[166] In light of the acute financial and emotional distress faced by consumers of MARS,[167] consumers often may not have or take the time needed, or obtain the information necessary, to consider carefully their options before deciding to purchase these services.[168] A right of rescission would serve to provide consumers with additional time to make decisions.

At this time, the Commission believes that a right of rescission is not needed to protect consumers if MARS providers are banned from collecting advance fees. The Commission seeks comment on whether a right of rescission would be adequate to protect consumers in lieu of an advance fee ban or, alternatively, whether it would be beneficial to consumers as a complement to an advance fee ban. It also seeks comment on, to the extent such a provision were included in the Rule, the appropriate period of time after consumers enter into the agreement that they should be able to rescind their agreements with MARS providers.

*F. Section 322.6: Assisting and Facilitating*

1. Background

Many MARS providers engaged in deceptive or unfair practices rely on, or work in conjunction with, other entities to advertise and operate their businesses. These entities may provide a wide variety of critical support and assistance, including advertising services, telemarketing and other marketing support,[169] payment

or respond to particular requests from the lender or borrower on behalf of the consumer. *See, e.g.*, NAAG at 5 ("We are now seeing consultants offering these services piecemeal. For example, some companies represent they will help consumers gather their financial documents and prepare the information to submit to their mortgage servicer for a fee. Then, for another fee, the companies represent that they will facilitate communication between the consumers and their mortgage servicer.").

[161] The MARS provider cannot evade this prohibition by refraining from making any explicit claim about the result it will achieve (such as a loan modification) and instead offering to provide specific mortgage relief-related services, such as a review of consumers' loan documents. Such offers are likely to convey to reasonable consumers that they will receive the ultimate result that is the purpose for which they are entering into the transaction. Thus, proposed § 322.5(b) requires MARS providers to obtain the loan modification or other remedy before requesting or collecting any fee.

[162] For example, Maine's statute regarding MARS providers limits them to a $75 up-front fee. *See* ME. REV. STAT. ANN. tit. 32, § 6174-A.

[163] *See, e.g.*, NAAG at 10 ("By fees, we mean any transfer of money whatsoever from consumers to consultants. This includes monies placed in escrow, holds placed on credit cards, and checks that are post-dated."); NCLC at 4 ("Companies should not be permitted to evade an advance fee ban by taking the money 'in trust' until the 'services' are performed.").

[164] *See, e.g., FTC v. US Foreclosure Relief Corp.*, No. SACV09-768 JVS (MGX), Decl. Thomas Layton (C.D. Cal. filed July 16, 2009) (stating that attorney improperly transferred 90% of funds from client trust accounts associated with loan modification services to other non-attorney business partners).

[165] *See, e.g.*, NAAG at 9; MN AG at 3-4; NCLC at 12; CRC at 4-5.

[166] *See supra* note 76.

[167] *See MARS ANPR*, 74 FR at 26134-35.

[168] The Commission has previously issued regulations providing for a rescission period in circumstances in which the context of the transaction made it difficult for consumers to make well-informed purchasing decisions. *See* Door-to-Door Sales Rule, 16 CFR 429.1, *et seq.*; Trade Regulation Rules: Mail or Telephone Order Merchandise (Mail Order Rule), 16 CFR 435.1(c) (1993); *see also Door-to-Door Sales Rule Statement of Basis and Purpose*, 37 FR 22943, 22937.

[169] *See, e.g., FTC v. Kirkland Young, LLC*, No. 09-23507, Mem. Supp. of Emer. Mot. for TRO at 9 (S.D. Fla. filed Nov. 24, 2009).

processing,[170] and the back-end handling of consumer files.[171] In providing this support and assistance, such entities often know, or consciously avoid knowing, that the MARS providers whom they assist are engaging in deceptive or unfair conduct.[172]

MARS providers, for example, often purchase the contact information of potential customers from so-called "lead generators." These lead generators, in turn, often rely on a network of Internet advertisers to drive traffic to their websites so that they can obtain consumers' information.[173] Lead generators have provided contact information of potential customers to many of the MARS providers that the Commission has challenged in its law enforcement actions.[174] Additionally, some lead generators themselves disseminate claims to consumers, and the Commission has challenged some of these claims as deceptive in violation of Section 5 of the FTC Act.[175]

To address the conduct of those who provide key support to MARS providers engaged in unlawful conduct, the proposed Rule prohibits any person from providing substantial assistance or support to a MARS provider if that person knows or consciously avoids knowing that the provider is violating any provision of the proposed Rule. Proposed § 322.6 thus would allow FTC and state law enforcement officials to obtain monetary and injunctive relief against those who knowingly help MARS providers engaged in conduct that harms consumers. The Commission believes that (1) it is an unfair act or practice to knowingly or with conscious avoidance provide substantial assistance or support to those engaged in unlawful conduct; and (2) prohibiting such assistance is reasonably related to the goal of preventing the deceptive or unfair practices of MARS providers.

2. Substantial Assistance or Support as an Unfair Practice

Applying the three-prong test under Section 5(n) of the FTC Act, the Commission tentatively concludes that it is unfair to knowingly (or with conscious avoidance) provide substantial assistance or support to a MARS provider engaged in violations of the proposed Rule. A person engaged in such conduct causes substantial injury to consumers that is not offset by benefits to consumers or competition, and consumers cannot reasonably avoid the injury.[176]

Persons who knowingly provide substantial assistance or support to a MARS provider engaged in unlawful practices significantly enhance the provider's ability to engage in the conduct and greatly increase the scope of the injury the practices cause. For example, a lead generation company may possess the contact information of thousands of consumers that otherwise might be unavailable to a small MARS provider. The MARS provider could use that information to target in a cost-effective manner many more consumers with deceptive marketing advertisements or pitches than it could in the absence of such information. Thus, entities such as lead generators often play a key role in enabling MARS providers to promote their services widely, leading to substantial injury to consumers if those providers collect advance fees but fail to deliver on their promises.

The Commission is not aware of any benefits to consumers or competition from knowingly assisting or supporting providers in violating the proposed Rule. The Commission seeks comment on whether there are benefits to consumers or competition from this conduct and, if so, whether those benefits outweigh the harms they cause to consumers.

Finally, the substantial injury caused by knowingly providing substantial assistance or support in this context is not reasonably avoidable by consumers. Consumers do not know that the MARS providers with whom they contract are engaged in unlawful conduct, much less those who assist or facilitate the providers.

3. Prohibiting Substantial Assistance or Support to Prevent Deception

The Commission believes that proposed § 322.6 is warranted for the purposes of preventing deceptive and unfair conduct by MARS providers. As noted above, MARS providers frequently rely upon the assistance and support of other entities for essential tasks such as identifying potential customers, marketing, back-room operations, and payment processing. These support entities make it possible for deceptive MARS providers to efficiently target, enroll, and process consumers on a wide scale. Prohibiting the knowing substantial assistance or support of MARS providers engaged in illegal acts is reasonably related to preventing deceptive or unfair practices by MARS providers.

4. The Proposed Provision

Section 322.6 of the proposed Rule prohibits any person from providing "substantial assistance or support" to any MARS provider if the person "knows or consciously avoids knowing that the provider is engaged in any act or practice that violates the Rule." This provision is modeled on a similar provision in the TSR.[177]

[170] *See, e.g.*, *FTC v. Loss Mitigation Servs., Inc.*, No. SACV09-800 DOC (ANX), Pls. Opp. Mot. Decl. Relief at 5 (C.D. Cal. filed Nov. 20, 2009) (alleging that payment processor for defendant loan modification company had "actual knowledge that the credit card charges [it] processed for [the defendant] were for advance fees in violation of relevant consumer protection laws"). In other industries, the FTC has sued payment processors for charging consumers for products or services despite indications that those products or services were illusory. *See, e.g.*, *FTC v. InterBill, Ltd.*, No. 06-cv-01644-JCM-PAL (D. Nev. Jan. 8, 2007); *FTC v. Your Money Access, LLC*, No. 07-5174 (E.D. Pa. filed Dec. 11, 2007).

[171] *See, e.g.*, *FTC v. Fed. Loan Modification Law Ctr., LLP*, No. SACV09-401 CJC (MLGx), Reply to Resp. Order To Show Cause at 9 (C.D. Cal. filed April 22, 2009) (alleging that defendants contracted with another entity to process backlog of consumer files and negotiate with lenders on behalf of those consumers).

[172] *See supra* notes 170-71.

[173] Additionally, advertising affiliate network companies may serve as intermediaries between individual advertisers and lead generator websites.

[174] *See, e.g.*, *FTC v. Kirkland Young, LLC*, No. 09-23507, Mem. Supp. of Emer. Mot. for TRO at 9 (S.D. Fla. filed Nov. 24, 2009) (alleging that defendant employed lead generators to leave messages with consumers via outbound telemarketing calls); *FTC v. Truman Foreclosure Assistance, LLC*, No. 09-23543 (S.D. Fla. filed Nov. 23, 2009); *FTC v. Hope Now Modifications, LLC*, No. 1:09-cv-01204-JBS-JS (D.N.J. filed Mar. 17, 2009).

[175] *See United States v. Ryan*, No. 09-00173-CJC (C.D. Cal. filed July 14, 2009) (criminal complaint against lead generator named as defendant in FTC action); *FTC v. Thomas Ryan*, No. 1:09-00535 (HHK) (D.D.C. filed Mar. 25, 2009); *FTC v. Sean Cantkier*, No. 1:09-cv-00894 (D.D.C. amended complaint filed July 10, 2009). The Commission also has alleged the involvement of lead generators in deception and abusive practices in other contexts, including deceptive or abusive telemarketing and payday lending practices. *See, e.g.*, *We Give Loans, Inc.*, Docket No. C-4232, FTC File No. 072 3205 (FTC Sept. 5, 2008) (complaint) (payday loans); *United States v. Voice-Mail Broad. Corp.*, No. CV-08 MMM (JTLx) (C.D. Cal. filed Jan. 29, 2008) (telemarketing).

[176] In law enforcement actions, the Commission has alleged that entities that offered substantial assistance to another engaged in unlawful acts were themselves engaged in unfair practices in violation of Section 5 of the FTC Act. *See, e.g.*, *FTC v. InterBill, Ltd.*, No. 06-cv-01644-JCM-PAL (D. Nev. filed Jan. 8, 2007); *FTC v. Your Money Access, LLC*, No. 07-5174 (E.D. Pa. filed Dec. 11, 2007). Federal court decisions have held that such conduct is unfair in violation of Section 5. *See, e.g.*, *FTC v. Neovi, Inc.*, 598 F. Supp. 2d 1104 (S.D. Cal. 2008) (holding that defendants engaged in unfair acts by creating checks they knew were often requested by unauthorized parties); *FTC v. Accusearch, Inc.*, No. 06-CV-105-D, 2007 WL 4356786 (D. Wyo. Sept. 28, 2007) (holding that defendants engaged in unfair practices by selling phone records obtained by other parties through deception); *FTC v. Windward Mktg.*, No. Civ.A. 1:96-CV-615F, 1997 WL 33642380 (N.D. Ga. Sept. 30, 1997) (holding that defendants engaged in unfair acts by depositing unauthorized bank drafts obtained by a deceptive telemarketing operation).

[177] *See* 16 CFR 310.3(b). The Telemarketing Sales Act gave the Commission the express authority to prohibit assisting and facilitating another in violating the TSR. Although the Omnibus Appropriation Act, as clarified by the Credit CARD

Proposed § 322.6 is limited to persons providing *substantial – i.e.*, more than casual or incidental – assistance or support to MARS providers.[178] Activities that might constitute substantial assistance or support include the provision of consumer leads,[179] contact lists, advertisements, or promotional materials.[180] Such activities also might include the support provided by payment processors[181] and other entities providing essential backroom operations.

In addition, proposed § 322.6 is limited to persons who know or consciously avoid knowing that the MARS provider is violating the Rule. As the Commission concluded in the context of the TSR, "[t]he 'conscious avoidance' standard is intended to capture the situation where actual knowledge cannot be proven, but there are facts and evidence that support an inference of deliberate ignorance on the part of a person that the seller or telemarketer is engaged in an act or practice that violates [the Rule]."[182] Proposed § 322.6 similarly excludes entities that provide basic support and services to MARS providers, but have no reasonable way of knowing that the providers are engaged in conduct in violation of the Rule.

*G. Section 322.7: Exemptions*

Section 322.7 of the proposed Rule addresses the applicability of the Rule's provisions to attorneys who are MARS providers. There is no general exemption for attorneys from the requirements of the proposed Rule. The Commission, however, proposes a limited exemption for licensed attorneys' conduct in connection with a bankruptcy case or other court proceeding to prevent foreclosure, where that conduct complies with state law, including rules regulating the practice of law. Attorneys who meet these criteria would be exempt from the proposed Rule's prohibitions against requesting or collecting advance fees. Additionally, attorneys would be exempt from the Rule's prohibition against advising consumers to cease contact with their lenders or servicers. Note, however, that all attorneys would continue to be subject to the proposed Rule's prohibition against misrepresentations, disclosure requirements, prohibition against knowing substantial assistance or support, and recordkeeping requirements.

1. Background

As discussed in Section II, an increasing number of attorneys have engaged in deception and unfairness in connection with mortgage assistance relief services.[183] For example, in its written comment, the Illinois Attorney General reported that "33 percent of the [MARS] companies we have dealt with are owned by attorneys, while 38 percent have some link to the legal profession."[184] Including attorneys within the proposed Rule is necessary to ensure that the rule is effective in preventing such conduct.

The Commission, however, recognizes that legal counsel may be valuable to some consumers who are trying to save their homes. Frequently, consumers will turn to attorneys for legal assistance with bankruptcy or other legal proceedings regarding their mortgage.[185] Consumers also may seek legal advice that may not necessarily be connected to a legal proceeding. For example, attorneys may conduct a review of mortgage contracts to determine legal options and obligations, which may aid the attorney in negotiating with a servicer on behalf of a consumer.[186] Under the proposed Rule, in the absence of an exemption, attorneys would be prohibited from using certain methods of collecting fees when they provide MARS to consumers. For example, attorneys representing clients in bankruptcy and other court proceedings often collect advance fees in the form of retainers, which usually must be placed in escrow.[187] Section 322.5 of the proposed Rule would prohibit the collection of such fees. In addition, attorneys performing bona fide legal services routinely advise clients to cease any direct communication with outside parties, such as lenders and servicers, and to refer all communications from these outside parties to the attorneys. Section 322.3(a) of the proposed Rule bars giving this instruction to consumers.

In the Commission's view, the present record[188] does not support a broad exemption for attorneys. Some attorneys have engaged in various forms of deceptive and unfair conduct in conducting activities covered by the proposed Rule. First, some attorneys have engaged in the same deceptive practices as non-attorney MARS providers, *i.e.*, failing to provide promised services, falsely touting high likelihoods of success, misrepresenting their refund policies, and falsely claiming an affiliation with the government or other entities.[189] Second, some MARS providers have begun employing or associating with attorneys to (1) support the MARS providers' (often false) claims that they provide legal services and (2) try to avail themselves of attorney exemptions under various state laws governing MARS.[190] In such attorney-MARS

Act, did not provide comparable authority, the Commission believes, as discussed earlier, that assisting and facilitating another in violating the MARS Rule is itself an unfair act or practice, and in addition that prohibiting this conduct is reasonably related to the goal of preventing unfair and deceptive conduct.

[178] *See TSR Statement of Basis and Purpose*, 60 FR 43842, 43852 ("The Commission further believes that the ordinary understanding of the qualifying word 'substantial' encompasses the notion that the requisite assistance must consist of more than mere casual or incidental dealing with a seller or telemarketer that is unrelated to a violation of the Rule.").

[179] *See, e.g.*, *FTC v. Patten*, No. 08-5560 (N.D. Ill. filed Sept. 29, 2008).

[180] *See id.*

[181] *See, e.g.*, *FTC v. Your Money Access, LLC*, No. 07-5174 (E.D. Pa. filed Dec. 11, 2007).

[182] *TSR Statement of Basis and Purpose*, 60 FR at 43852.

[183] *See supra* notes 46-48, 66-68. In fact, the State Bar of California recently reported a "crisis" of attorney misconduct, noting that it "has experienced a 58 percent increase in active investigations over 2008 due in large part to the huge increase in complaints against attorneys offering loan modification services." *See* Press Release, State Bar of California, *State Bar Takes Action to Aid Homeowners in Foreclosure Crisis* (Sept. 18, 2009), *available at* (*http://www.calbar.ca.gov/state/calbar/calbar_generic.jsp?cid=10144&n=96395*); *see also* CRC at 6.

[184] IL AG at 1.

[185] *See, e.g.*, NCLC at 14 (noting that attorneys could "fil[e] a bankruptcy petition or. . . suit challenging a predatory loan or a defense to foreclosure" and provide other non-litigation legal services including "negotiating a settlement with a lender"); OH AG at 5 ("The knowledge an attorney has of his or her state's foreclosure law can properly help borrowers navigate the foreclosure process."); MA AG at 7 (noting that "a competent and ethical attorney can be a valuable asset to a homeowner trying to avoid foreclosure").

[186] *See* NCLC at 14 (noting that "an attorney's more beneficial and traditional role of analyzing a client's paperwork and advising the client of potential claims and options may also fit within the definition of mortgage assistance relief").

[187] *See, e.g.*, MODEL RULES OF PROF'L CONDUCT R. 1.15 (2009).

[188] Note that the Commission did not receive any comments in response to its ANPR from attorneys or organizations representing attorneys addressing the role of attorneys in connection with providing loan modification services. To have a complete and accurate understanding of the role of attorneys in connection with loan modification services, the Commission seeks comment from attorneys and other interested parties on this issue.

[189] *See supra* notes 46-47; *see also, e.g.*, NAAG at 13 ("We have received many complaints regarding attorneys who are offering loan modification business. These attorneys generally provide no legal services for consumers and present the same problems as mortgage consultants in general."); Drexel Testimony, 111th Cong. 1st Sess. at 6 ("[A] certain number of attorneys are willing to engage in these fraudulent activities on their own.").

[190] *See* IL AG at 2 ("Attorneys are using the exemption to market and sell the same mortgage consulting services provided by non-attorneys."); CSBS at 2 (noting "attorneys who lend their name to a loan modification company, but play, little, if

Continued

provider arrangements, the attorneys often do little or no legal work on behalf of consumers,[191] with non-attorneys handling most functions, including communications with the lender or servicer.[192] The Commission's law enforcement experience, as well as that of state attorneys general, indicates that MARS providers often induce consumers to believe that they will receive specialized legal assistance from attorneys, even though the attorneys have done little more than lend their names and credentials to the operation.[193]

Many state MARS statutes contain relatively broad exemptions for attorneys. For example, some states exempt attorneys so long as they are licensed in the same state as the borrower or have an attorney-client relationship with the borrower.[194] Attorneys offering MARS often have flouted various state bar rules, however.[195] In many cases, these attorneys have not been licensed to practice law in the states where consumers who purchase the MARS reside.[196] In addition, given that attorneys purporting to provide MARS often play little or no role in counseling or negotiating on behalf of borrowers, they may violate state bar requirements that they provide bona fide legal services to their clients.[197] Attorneys also allegedly have engaged in prohibited affiliation arrangements with non-attorneys such as fee-splitting, providing or taking referral fees, and assisting or supporting others in the unauthorized practice of law.[198] In response, state bars have initiated numerous investigations of attorneys engaged in MARS and, in some cases, have brought misconduct cases against them.[199]

Most of the public comments filed in response to the ANPR that addressed this issue recommended that the Commission not grant a broad exemption for attorneys because of concerns that they may continue to engage in deceptive and unfair practices related to mortgage assistance relief services.[200] NAAG, for example, urged the Commission to provide no exemption for attorneys engaged in MARS.[201]

2. Proposed Exemption

Most comments advocated a narrow exemption limited to certain types of practice or conduct by attorneys.[202] With regard to the prohibition on collecting advance fees, the Commission proposes to exempt only those attorneys who are in compliance with state law, including state bar rules, and only for the provision of specific, limited legal services. Such a narrowly-tailored exemption seeks to strike a balance that would protect consumers from unfair or deceptive conduct by attorneys who are

---

any direct role, in helping consumers obtain actual loan modifications"); MN AG at 5 ("The Office is aware of several loan modification and foreclosure rescue companies that have affiliated with licensed attorneys in other states in an effort to circumvent state law."); CRC at 2 ("An increasing number of attorneys are involving themselves in these unethical practices without providing any legal (or other) services, sometimes engaging in fee-splitting or even simply acting as fronts for loan modification companies who are seeking to avoid state laws that prohibit some of the practices described above but exempt attorneys."); California State Bar Ethics Alert at 2 ("There is evidence that some foreclosure consultants may be attempting to avoid the statutory prohibition on collecting a fee before any services have been rendered by having a lawyer work with them in foreclosure consultations."); *FTC v. Loss Mitigation Servs., Inc.*, No. SACV09-800 DOC (ANX), Mem. Supp. Pls. Ex Parte App. at 3 (C.D. Cal. Aug. 3, 2009) (alleging that "Walker Law Group" was "a sham legal operation designed to evade state law restrictions on the collection of up-front fees for loan modification and foreclosure relief").

[191] *See, e.g.*, IL AG at 2 ("While attorney mortgage consultants charge a premium for their services and aggressively market their status as legal professionals, they generally exclude – either expressly or in practice – actual legal representation or legal work from the scope of provided services."). Some MARS providers advertise the provision of legal services to consumers but then later disclaim, in fine print contracts, that they will actually provide such services. *See id.* at 2-4, 7.

[192] *See, e.g.*, Chase at 5 ("Many MARS providers claim to be affiliated with attorneys, but typically the people performing the services are not attorneys, and the connection with the attorney is very tenuous. Calls to the MARS provider do not go to the attorney's office and addresses used by the providers are not the same as the attorney's."); OH AG at 5 ("[A]t most the lawyer [advertised to consumers by foreclosure rescue companies] will file a brief template response on behalf of the consumers."); *see also* Drexel Testimony at 6 ("In exchange for the use of the attorney's name and his or her ability to charge and receive advance fees, the foreclosure consultant typically offers to perform most or all of the loan modification services. . . ."); Press Release, State Bar of California, *State Bar Takes Action to Aid Homeowners in Foreclosure Crisis* (Nov. 25, 2009) ("[T]he attorneys work with untrained non-attorney staff engaging in the unlawful practice of law by offering legal advice to prospective clients. [The Office of Trial Counsel] also is investigating the non-attorney staff for possible referral to law enforcement."), *available at* (*http://www.calbar.ca.gov/state/calbar/calbar_generic.jsp?cid=10144&n=96395*); *FTC v. LucasLawCenter "Inc.,"* No. SACV-09-770 DOC (ANX) (C.D. Cal. filed July 7, 2009).

[193] *See, e.g.*, *supra* note 46; *see also* CMC at 10 ("[The attorneys'] communications [with the consumer] are generally 'boilerplate' that does not appear to reflect any considered review by an attorney."); OH AG at 5 ("[O]ur office sees foreclosure rescue companies advertise that they will provide a lawyer or legal help to that consumer. The lawyer's client, however, is actually the company, not the consumer, and at most the lawyer will file a brief template response on behalf of the consumers"); IL AG at 2.

[194] *See, e.g.*, COLO. REV. STAT. § 6-1-1103(4)(b)(I); 765 IL. COMP. STAT. ANN. 940/5; Mo. Rev. Stat. § 407.935(2)(b)a; *see also, e.g.*, NAAG at 13 ("Currently, most states exempt attorneys from their mortgage rescue consultant laws."); CMC at 9-10.

[195] *See generally, e.g.*, *Cincinnati Bar Assoc. v. Mullaney*, 119 Ohio St. 3d 412 (2008) (sanctioning attorneys engaged in mortgage assistance relief service for, *inter alia*, engaging in the unauthorized practice of law, fee sharing with nonlawyers, and failing to provide adequate legal services); CRC at 2 ("An increasing number of attorneys are involved themselves in these unethical practices without providing any legal (or other) services, sometimes engaging in fee-splitting or even simply acting as a front for loan modification companies who are seeking to avoid state laws that prohibit some of the practices described above but exempt attorneys.").

[196] *See, e.g.*, CMC at 9-10 ("These attorneys are often not licensed to practice in either the borrower's or servicer's state. . . ."); CSBS at 2 ("This [increase of involvement by attorneys] includes out-of-state attorneys, many of whom are not licensed to practice law in the state where the homeowner lives. . . ."); *see also* MODEL RULES OF PROF'L CONDUCT R. 5.5 (2009).

[197] *See, e.g.*, CSBS at 2; Chase at 5; CMC at 9-10; OH AG at 5.

[198] CSBS at 2; California State Bar Ethics Alert at 2 ("Many of the proposed relationships between these foreclosure consultants and lawyers violate the Rules of Professional Conduct and other ethical rules and, therefore, could result in lawyer discipline."); *see also, e.g.*, California Rules of Professional Conduct R. 1-310 (prohibiting partnerships with non-attorneys); *id.* R. 1-310 (prohibiting fee sharing with non-attorneys); *id.* R. 1-300(A) (prohibiting aiding in unauthorized practice of law.).

[199] *See, e.g.*, Press Release, State Bar of California, *State Bar Continues Pursuit of Attorney Modification Fraud* (Aug. 12, 2009), *available at* (*http://www.calbar.ca.gov/state/calbar/calbar_generic.jsp?cid=10144&n=96096*); Florida Bar, *Ethics Alert: Providing Legal Services to Distressed Homeowners*, *available at* (*http://www.floridabar.org/TFB/TFBResources.nsf/Attachments/872C2A9D7B71F0578525756900 5795DE/$FILE/loanModification20092.pdf?*); *see also, e.g.*, *Cincinnati Bar Assoc. v. Mullaney*, 119 Ohio St. 3d 412 (2008) (disciplining attorneys involved in mortgage assistance relief services).

[200] *See, e.g.*, IL AG at 1 ("We believe that any rule-making should *not* include a categorical attorney exemption. . . .").

[201] NAAG at 13. One commenter also argued against an exemption for attorneys because it "is likely to create an environment where more companies organize themselves as exempted classes," whereas "[a]n effective rule will not create loopholes that will only be readily exploited, nor will it create unfair competition by creating less-accountable classes of loan modification or foreclosure rescue companies." NCRC at 5.

[202] To the extent that commenters supported any exemption for attorneys, they largely supported a very limited exemption along the lines of the one in the proposed Rule. *See, e.g.*, IL AG at 9 ("We continue to support a limited exemption for attorneys who render legal services on behalf of consumers in the course of serving as the *attorney of record in bankruptcy or foreclosure proceedings*.") (emphasis in original); Shriver at 3 (recommending that "attorneys engaged in judicial foreclosure proceedings should remain exempt at the federal level since they are already regulated [by state law] and supervised [by state bar associations]"); NYC DCA at 4 (recommending that the Commission prohibit collection of advance fees by attorneys "not directly involved with legal services in connection with either the preparation and filing of a bankruptcy petition or court proceedings to avoid a foreclosure."); MA AG at 9 (recommending that the Commission adopt a provision similar to Massachusetts state law, described *infra* note 206).

engaged or otherwise involved in the practice of selling MARS, while at the same time preserve the ability of attorneys to provide bona fide legal services to homeowners.

The Commission's limited exemption for attorneys in proposed § 322.7 applies only if the attorney is "providing legal counsel in connection with preparing or filing (i) a bankruptcy petition or any other document that must be filed in a bankruptcy proceeding; or (ii) any document that must be filed in connection with a court or administrative proceeding." The preparation and filing of bankruptcy petitions and other documents for court proceedings is part of the bona fide practice of law. In addition, limiting the attorney exemption in the Rule to these concrete and specific legal services makes it easier for federal and state law enforcement officials to determine whether an attorney in fact qualifies for the exemption. For example, the exemption clearly does not cover attorneys who primarily offer to obtain loan modifications for consumers outside of a formal legal proceeding. Further, the Commission intends for this exemption to cover only attorneys who actually provide the specified legal services for a borrower; it would exclude attorneys that merely market the possibility of doing so.[203]

Moreover, the limited exemption for attorneys from the advance fee ban applies only if the attorney "complies with all applicable state laws, including licensing regulations." If an attorney is not licensed to practice in the state, there is no reason the proposed Rule should not apply to the attorney's activities to the same extent as any other MARS provider. If an attorney is licensed to practice in a state, the attorney would be exempt under the proposed Rule only if he or she complies with state law, including state bar rules. Several commenters advocated the inclusion of such a requirement to protect consumers from unfair and deceptive conduct of attorneys that would violate state ethics and other rules governing attorneys.[204] For example, a frequent characteristic of MARS attorneys engaged in deception is that they offer services to borrowers outside of the state in which they are licensed.[205] Under the proposed Rule, such an attorney would not be exempt from the rule.

Finally, proposed § 322.7 only exempts attorneys from those parts of the proposed Rule that interfere with the attorneys' provision of traditional, bona fide legal services to homeowners. Attorneys would be exempt from the advance fee ban in proposed § 322.7.[206] Attorneys performing the services within the scope of the exemption often collect advance fees in the form of retainers, which usually must be placed in escrow.[207] There is no indication that this practice generally has caused problems for consumers.

The Commission recognizes that this narrow exemption would not apply to attorneys providing MARS to consumers outside of the bankruptcy or litigation context, and therefore might deter some attorneys from providing legitimate assistance to consumers, for example, by calling lenders or servicers on their behalf. There is nothing in the record, however, indicating how many attorneys provide these types of services and whether an advance fee ban would deter them from helping consumers. In addition to providing a limited exemption from the prohibition on advance fees, proposed § 322.7 exempts lawyers from the proposed Rule's prohibition against instructing consumers to cease communications with their lenders or servicers, so long as the lawyer is licensed to practice law in the state where the consumers resides. The Commission is concerned that the narrowness of the exemption could interfere with the ability of attorneys to offer counsel and advice to their clients. Therefore, it seeks comment on whether this exemption is justified and whether it would be possible to tailor it differently to curb unfair or deceptive acts or practices engaged in by attorneys providing MARS, without preventing or deterring the provision of legitimate legal services.[208]

*H. Section 322.8: Waiver*

Section 322.8 of the proposed Rule provides that "[a]ny attempt by any person to obtain a waiver from any consumer of any protection provided by or any right of the consumer under this rule constitutes a violation of the rule." The Commission believes that this provision is necessary to prevent MARS providers from attempting to circumvent the proposed Rule. Several states include similar provisions in their statutes restricting MARS.[209]

*I. Section 322.9: Recordkeeping and Compliance Requirements*

Section 322.9(a) of the proposed Rule sets forth specific categories of records MARS providers must retain.[210] A failure to keep such records is an independent violation of the Rule.[211]

Specifically, for a period of 24 months from the date the record is produced, MARS providers must keep the following records:

(1) All contracts or other agreements between the provider and any consumer for any mortgage assistance relief service;

[203] In one recent lawsuit by the Commission, the defendants represented to consumers that "they [were] a law firm with attorneys in several states offering loan modification, Chapter 13 bankruptcy, and Chapter 7 bankruptcy." *FTC v. Washington Data Res., Inc.*, No. 8:09-cv-02309-SDM-TBM (M.D. Fla. filed Nov. 12, 2009). Despite any such marketing claims, if the attorney associated with a provider fails to work with the borrower to prepare a bankruptcy petition, or instead only seeks a loan modification for the borrower outside of any bankruptcy or other court proceedings, he or she would still be prohibited from requesting or receiving an advance fee under the proposed Rule.

[204] *See, e.g.*, OH AG at 5 (recommending that the exception only apply where the attorney has a legitimate attorney-client relationship with the consumer, which would require the attorney to provide legal services to the consumer and to be properly licensed in the state where he or she would be providing legal services); MA AG at 7-8; NCLC at 15; Chase at 5; CMC at 10; NCLC at 15.

[205] *See supra* note 196.

[206] Proposed § 322.7 resembles a similar provision in the Massachusetts state mortgage assistance relief rules. The Massachusetts provision provides, in relevant part, "It is an unfair or deceptive act. . . to solicit, arrange, or accept an advance fee in connection with offering, arranging or providing Foreclosure-related Services; provided, however, that [this provision] shall not prohibit a licensed attorney from soliciting, arranging or accepting an advance fee or retainer for legal services in connection with the preparation and filing of a bankruptcy petition, or court proceedings, to avoid a foreclosure. Provided further, however, that a licensed attorney accepting an advance fee or legal retainer must comply with all applicable laws and regulations pertaining to such fees, including the Massachusetts Rules of Professional Conduct. . . ." 940 MASS. CODE REGS. § 25.02.

[207] *See, e.g.*, MODEL RULES OF PROF'L CONDUCT R. 1.15 (2009).

[208] The Commission also seeks comment and data bearing on whether other professionals, such as financial planners, advise consumers on obtaining loan concessions from their lenders or servicers, and whether the proposed Rule would interfere with their provision of MARS. The Commission further requests comment on whether the proposed Rule should contain a limited exemption for these professionals.

[209] *See supra* note 76.

[210] The proposed recordkeeping requirements are modeled after those set forth in the *TSR Statement of Basis and Purpose*, 60 FR at 43841. As explained below, the required documents include records of transactions with consumers, scripts, advertisements, and related promotional materials. The Telemarketing Sales Act expressly authorized the Commission to impose recordkeeping requirements. Although the Omnibus Appropriation Act, as clarified by the Credit CARD Act, did not give comparable authority to the Commission, the Commission believes that the proposed recordkeeping requirements are reasonably related to the goal of preventing unfair and deceptive conduct.

[211] Proposed § 322.9(c). *See* 16 CFR 310.5(b) ("Failure to keep all records required. . . shall be a violation of [the TSR]."); *TSR Statement of Basis and Purpose*, 60 FR at 43857 ("[I]f a deceptive telemarketer or seller were to destroy records, law enforcement agencies still would be able to charge them with violating § 310.5(b), which makes the failure to maintain all the required records a violation of the Rule.").

(2) Copies of all written communications between the provider and any consumer occurring prior to the date on which the consumer enters into a contract or other agreement with the provider of any mortgage assistance relief service;

(3) Copies of all documents or telephone recordings created in connection with compliance with paragraph (b) of the section, which sets forth requirements to monitor employees' and independent contractors' compliance with the proposed Rule;

(4) All consumer files containing the names, phone numbers, dollar amounts paid, quantity of items or services purchased, and descriptions of items or services purchased, to the extent such information is obtained in the ordinary course of business;

(5) Copies of all materially different sales scripts, training materials, commercial communications, or other marketing materials, including websites and weblogs; and

(6) Copies of the documentation provided to the consumer as specified in § 322.5 of this rule.

The Commission believes the record establishes the need to propose these recordkeeping requirements. As discussed throughout this document, the MARS industry appears to be permeated with deception and unfair practices, targeting financially vulnerable consumers. Accordingly, strong recordkeeping provisions seem essential to ensure effective and efficient enforcement of the Rule and to identify injured consumers.[212]

At the same time, the Commission is mindful that recordkeeping provisions impose compliance costs. To reduce the compliance burden, the proposed provisions require that MARS providers generate and keep documents they likely already retain in the ordinary course of their business.[213] In addition, proposed § 322.9(c) states that providers may keep the records in any form and in the same manner, format, or place as they keep records in the ordinary course of business.[214] This flexibility as to the form and manner in which records must be kept likewise would decrease the cost of recordkeeping.

The proposed Rule further attempts to limit the retention requirements to the minimum amount of information necessary. For example, providers must maintain records relating to actual transactions with customers; they are not required to keep records where consumers do not sign contracts or do not agree to offers of mortgage assistance relief services. In addition, providers must retain only materially different versions of advertising and related materials.[215] The proposed Rule calls for a 24-month record retention period.[216] The Commission believes that two years is the minimum amount of time necessary for consumers to report violations of the Rule and for the Commission to complete investigations and to identify victims. Accordingly, the FTC believes that the proposed recordkeeping provisions strike an appropriate balance between ensuring efficient and effective law enforcement and avoiding the imposition of unnecessary compliance costs.

Section 322.9(b) of the proposed Rule also contains four compliance requirements reasonably calculated to prevent unfair or deceptive practices by MARS providers. Proposed § 322.9(b)(1) requires providers to monitor the Rule compliance of their employees and independent contractors. Such steps include monitoring sales presentations with customers and potential customers. Providers specifically must:

- Conduct random, blind tape recording of the oral representations made by persons in sales or other customer service functions;[217]
- Establish a procedure for receiving and responding to consumer complaints; and
- Ascertain the number and nature of consumer complaints regarding transactions with the employee or independent contractor.

Proposed § 322.9(b)(2) also requires that MARS providers investigate promptly and fully any consumer complaint received. To comply with this provision, MARS providers should establish a procedure for receiving, investigating, and responding to all consumer complaints. Proposed § 322.9(b)(3), in addition, mandates that MARS providers must take corrective action with respect to any salesperson whom the provider determines is not complying with the Rule. These corrective actions include the adoption and implementation of a reasonable program to train, discipline and terminate employees who do not comply with the Rule. Finally, proposed § 322.9(b)(4) requires documentation of compliance with the above requirements. Such documentation must include copies of the random, blind tape recordings of employees' communications with consumers and records of any disciplinary actions against employees for non-compliance with the Rule.

The compliance requirements in the proposed Rule are comparable to provisions in other FTC rules, including the Standards for Safeguarding Customer Information ("Safeguards Rule"),[218] TSR,[219] and the 900 Number Rule.[220] In the TSR and 900 Number Rules, the Commission imposed monitoring and compliance requirements parallel to those set forth in proposed § 322.9(b). As is the case with the Safeguards Rule, proposed § 322.9(b)(3) of the proposed Rule requires that covered entities take appropriate corrective actions to ensure employee and contractor compliance with the Rule.[221] In addition, proposed

[212] NCLC notes that HUD's criteria for approving housing counselors under the HUD Housing Counseling Program include strong recordkeeping provisions. NCLC at 7. These recordkeeping provisions include the retention of client files. *See* Mortgage and Loan Insurance Programs Under the National Housing Act and Other Authorities, 24 CFR 214.315(b) (2007). As HUD explained in its regulation: "The system must permit HUD to easily access all information needed for a performance review." *Id.* at 214.315(a). The recordkeeping requirements proposed by the Commission – focusing largely on documents pertaining to transactions between the provider and client – are similar and will enable the Commission efficiently to obtain evidence of compliance with the proposed Rule. *See TSR Statement of Basis and Purpose*, 60 FR at 43875 ("A record retention requirement is necessary to enable law enforcement agencies to ascertain whether sellers and telemarketers are complying with the requirements of the Final Rule, to identify persons who are involved in any challenged practices, and to identify customers who may have been injured."); *cf.* Franchise Rule, 16 CFR 436.6(h) ("Franchisors shall retain, and make available to the Commission upon request, a sample copy of each materially different version of their disclosure documents for three years after the close of the fiscal year when it was last used."); *id.* at 436.6(i) ("For each completed franchise sale, franchisors shall retain a copy of the signed receipt for at least three years."); Funeral Industry Practices (Funeral Rule), 16 CFR 453.6 (1994) (requiring funeral providers to retain copies of price lists and statements of funeral goods and services for at least one year).

[213] *Cf. TSR Statement of Basis and Purpose*, 60 FR at 43857 ("The [TSR] Final Rule requires retaining records that most businesses already maintain during the ordinary course of business.").

[214] *Cf. id.*

[215] *Cf. id.* at 43858 (recognizing the burden imposed by requiring the retention of each and every script, advertisement, and promotional piece, "much of which may be worthless or redundant from a law enforcement standpoint").

[216] *Cf.* 16 CFR 310.5(a) (setting forth a 24-month record retention requirement).

[217] The Commission notes that this requirement does not mean that MARS providers must tape every sales call; rather, implementing a taping program that is reasonably designed to record calls on a random basis without knowledge that the calls are being recorded would suffice.

[218] 16 CFR 314.1, *et seq.* (2002) (imposes various affirmative obligations on covered entities in connection with implementing mandated security program to protect and secure customer information); *see also* Children's Online Privacy Protection Rule, 16 CFR 312.1, *et seq.* (2005) (requiring, among other things, parental approval to collect personal information from children).

[219] 16 CFR 310.1, *et seq.*

[220] 16 CFR 308.1, *et seq.*

[221] 16 CFR 314.4; *see also* 900 Rule, 16 CFR 308.3(h).

§ 322.9(b)(1)'s specification that monitoring must include, at a minimum, random, blind taping recording and monitoring of the oral representations made by sales representatives has a parallel in the TSR.[222] The requirement in proposed § 322.9(b) that MARS providers receive, respond to, and investigate consumer complaints is comparable to the billing and collection provisions in the 900 Rule that require consumer dispute resolution procedures, including responding to customer allegations of billing errors.[223]

*J. Section 322.10: Actions by States*

The Omnibus Appropriations Act, as clarified by the Credit CARD Act, permits states to enforce the Rules issued in connection with the MARS rulemaking.[224] States may enforce the Rules, subject to the notice requirements of the Omnibus Appropriations Act, by bringing civil actions in federal district court or another court of competent jurisdiction. Proposed § 322.10 sets forth that states have the authority to file actions against those who violate the Rule.

*K. Section 322.11: Severability*

Proposed § 322.11 states that the provisions of the Rule are separate and severable from one another. This provision, which is modeled after a similar provision in the TSR,[225] also states that if a court stays or invalidates any provisions in the proposed Rule, the Commission intends the remaining provisions to continue in effect.

## IV. Request for Comment

The Commission seeks comment on various aspects of the proposed Rule. Without limiting the scope of issues on which it seeks comments, the Commission is particularly interested in receiving comments on the questions that follow. In responding to these questions, please include detailed factual supporting information whenever possible.

*A. General Questions for Comment*

Please provide comment on each aspect of the proposed Rule, including answers to the following questions.

(1) How would the proposed Rule affect the provision of different types of mortgage assistance relief services? Useful information would include information about the services provided by particular entities or the types of entities, how these different entities perform their services, and the effect of the proposed Rule on them.

(a) In particular, what types of mortgage and foreclosure relief are being offered to consumers? Do the forms of relief differ in the benefits they provide to consumers and, if so, how do they differ? Do the costs of mortgage assistance relief services vary based on the type of relief offered and, if so, how? For each form of relief, what is the likelihood consumers will receive it? What factors affect whether a particular consumer will receive a form of relief?

(b) Do entities differ in how they currently charge fees for their services? For example, what payments are made before work begins, what payments are made while work is being performed, and what payments are made after all work is completed? Which types of providers require consumers to make some payment before services are completed, and which do not? How much of the total fee do providers typically collect prior to completing their work? Are consumers required to make payments that are contingent on the provider achieving a beneficial result and, if so, how much of the total amount paid is contingent on such a result? Which types of providers require consumers to pay only if the providers achieve a beneficial result? How is it determined that the provider has achieved such a beneficial result?

(2) What would be the effect of the proposed Rule (including any benefits and costs) on consumers? Would the costs and benefits to consumers differ depending on the service offered or the type of provider offering it and, if so, how? Would the costs and benefits differ depending on the form of relief and, if so, how?

(3) What evidence is there that consumers are misled in the promotion and sale of MARS? Are consumers misled by particular types of entities and, if so, which ones? What evidence is there that consumers are misled about the status of MARS providers or their affiliation with the government, government programs, lenders, or servicers? What evidence is there that consumers are misled about the likelihood that they will receive specific results and, if so, which results? What evidence is there that consumers are misled about the total cost of MARS? About what other attributes of MARS do providers mislead consumers?

(4) What would be the effect of the proposed Rule (including any benefits and costs) on MARS providers?

(5) Would the proposed Rule encourage or discourage financial advisors, financial planners, and other providers of financial services from becoming MARS providers or adding MARS to their existing lines of business? Does the proposed Rule restrict business practices, for example, the terms of payment, that create barriers for financial service providers from becoming MARS providers? If so, what are these business practices and how does the proposed Rule affect them?

(6) What changes, if any, should be made to the proposed Rule to increase benefits to consumers and competition?

(7) What changes, if any, should be made to the proposed Rule to decrease costs to industry or consumers?

(8) How would the proposed Rule affect small business entities with respect to costs, profitability, competitiveness, and employment?

*B. Specific Questions on Proposed Provisions*

1. Section 322.2: Definitions

(1) Does the definition of "mortgage assistance relief service" in proposed § 322.2(h) adequately describe the scope of the proposed Rule's coverage? If not, how should it be modified? Are there additional services or forms of relief that should be included in the definition? Alternatively, are there services or forms of relief that should not be included in the definition? Should additional terms be defined and, if so, how? What would be the costs and benefits of each suggested definition?

(a) In particular, should the proposed Rule cover services to assist consumers negotiate with their lenders to obtain new loans or refinancing? What types of entities offer these kind of services? What factors affect whether a particular consumer receives this form of relief? Do entities offer these services to consumers who may be delinquent on their mortgages, owe more on their mortgages than their homes are worth, or who are struggling to make their mortgage payments? What is the likelihood that consumers in these situations receive refinancing or new loans? What evidence, if any, is there that consumers in these situations are being misled about these services? Are other laws or regulations sufficient to

[222] *See* 16 CFR 310.4(a)(6)(i)(C) (requiring telemarketers to make and maintain an audio recording of telemarketing transactions involving pre-acquired account information).

[223] *See* 16 CFR 308.7. Specifically, the 900 Rule requires billers of pay-per-call services to respond to consumer notices of billing errors, including: (1) sending a written acknowledgment to the consumer of receipt of the billing error notice; (2) correcting the billing error and crediting the consumer's account for any disputed amount; and (3) if appropriate, explaining to the customer, after reasonable investigation, the reasons why no billing error occurred.

[224] Credit CARD Act § 511(b).

[225] *See* 16 CFR 310.9.

protect consumers from these practices? What would be the costs and benefits of including these types of services in the proposed Rule?

(b) The Commission intends the proposed Rule to apply to sale-leaseback and similar transactions *only* to the extent that such transactions are marketed as a means to avoid foreclosure. What are the costs and benefits of this approach? Should these services generally be exempted from coverage? Alternatively, should these services be subject to additional restrictions and limitations in the proposed Rule? What is the experience of the states in regulating these types of transactions? Does the proposed Rule conflict with state laws regulating sale-leaseback and similar transactions and, if so, how should the conflict be resolved?

(c) Are there reasons to broaden the definition of MARS to include the word "product?" Would the addition of "products" allow the proposed Rule to address deceptive and unfair practices not already covered? Are there reasons to include "products" in anticipation of likely changes in the marketplace? Why or why not?

(2) Should any entities covered by the definition of "mortgage assistance relief service provider" in proposed § 322.2(i) be excluded or exempted from this definition? If so, which entities? Why or why not?

(a) In particular, should MARS provider be defined for the purposes of the proposed Rule to exclude persons who provide incidental or de minimis advice or assistance? If so, how should incidental or de minimis advice or assistance be measured? Should this modified definition depend on whether the person attempts to obtain the mortgage relief on behalf of the consumer, or advises or assists the consumer to obtain the relief on his or her own?

(3) Proposed §§ 322.2(i)(1) and (2) generally exempt loan holders and servicers, as well as their agents, from the definition of "mortgage assistance relief service providers." Is this exemption appropriate? Why or why not? Do these entities promote or sell MARS to consumers? If so, what types of services are offered to consumers and how are fees collected for these services? Are there concerns that loan holders and servicers engage in deceptive or unfair conduct addressed by the proposed Rule? If so, please provide a detailed explanation.

(4) Proposed § 322.2(i)(3) generally exempts from the definition of "mortgage assistance relief service providers" any nonprofit excluded from the FTC's jurisdiction. What types of such nonprofit entities offer MARS? What types of MARS do these entities offer to consumers and, if applicable, how are fees collected for these services? What are the costs and benefits for consumers if MARS are provided by a nonprofit rather than a for-profit entity? Does the proposed Rule create an incentive for for-profit entities to become nonprofits? If providers become nonprofits, what would be the advantages and disadvantages for consumers?

(5) Are the disclosure standards set forth in the definition of "clear and prominent" appropriate for MARS? What are the costs and benefits of these standards? For example, is it appropriate for the visual disclosure to be at least 4 percent of the vertical picture or screen height and be shown for at least the duration of the oral disclosure? Should these disclosures be larger or longer? Do consumers notice and comprehend disclosures that appear on a separate landing page immediately prior to the page on which the consumer takes action to incur any financial obligation? Are there alternative standards that would be more effective? Are there data bearing on whether the proposed disclosure standards would be effective?

2. Section 322.3: Prohibited Representation

(1) Proposed § 322.3(a) bans providers from advising consumers not to contact or communicate with their lenders or servicers. What are the costs and benefits of banning these types of statements? Should additional statements relating to MARS be prohibited? Are there alternative approaches to banning such advice that would allow such advice to be given but would still protect consumers from the risk arising from not communicating with servicers or lenders?

(2) Proposed § 322.3(b) prohibits misrepresentations of any material aspect of any MARS, and provides specific examples of such prohibited misrepresentations. How widespread is each specified misrepresentation? Are there other prohibited misrepresentations that should be specified in the proposed Rule? If so, why? Should any of the described misrepresentations be broadened or narrowed to better address the deceptive conduct they are intended to prevent? If so, what should those modifications be?

3. Section 322.4: Required Disclosures

(1) Are the disclosures required by proposed § 322.4 appropriate to address current and prospective harms to consumers in connection with the sale of MARS? Why or why not? How could the disclosures be modified to better address these harms? Is the proposed language of each disclosure readily understandable by consumers? If not, is there alternative language that would be more effective? If so, provide the suggested disclosure language and discuss why it would be more effective.

(2) The disclosure required under § 322.4(b)(3) only must be made in cases where MARS are represented to perform services and achieve results that are set forth in § 322.2(h)(1) and §§ 322.2(h)(3)-(6). Are there other situations in which the disclosure requirements should be tailored to apply only to entities purporting to provide certain services or results, or should each of the disclosure requirements be applicable to all MARS providers? Why or why not? If so, which entities should be covered for each required disclosure?

(3) What are the costs and benefits of the disclosure requirements in the proposed Rule? How would MARS providers comply with the requirements? What burdens do the requirements impose on providers? Are there changes that could be made to lessen the burdens without reducing the benefits to consumers?

(a) In particular, would having the proposed Rule mandate a specific format for disclosures or set forth a disclosure requirement that would be a safe harbor lessen the burdens on MARS providers without reducing the benefits to consumers?

(b) Should the proposed Rule mandate that the required disclosures be made in writing? If so, how should such disclosures be made, for example, in a contract or a stand-alone notice? If there is a written notice, what types of information should be included in the notice? For example, should the written notice disclose the total fee for the MARS and/or any formula used to calculate the amount of the fee charged for the service? When should the written disclosures be made to consumers? What would be the added benefits to consumers of such a disclosure requirement? What would be the added costs to MARS providers?

(4) Are there additional types of information that should be disclosed to prevent harm to consumers? If so, please identify the types of information, and, if possible, provide suggested language that could be used to convey that information to consumers. Also, please discuss the relative costs and benefits to consumers and industry of such disclosures? For example, would it be beneficial for MARS providers to disclose to consumers the consequences

of not paying their mortgages (such as the loss of their home and damage to their credit ratings)? Why or why not? If the proposed ban on advance fees is enacted, would it be beneficial for MARS providers to disclose to consumers that fees are not owed unless promised results are delivered? Why or why not? Should MARS providers be required to disclose the minimum specific benefit the consumer will receive, *e.g.*, the minimum reduction in the monthly payment amount, for the amount of fees to be paid? Would such a disclosure be beneficial to consumers or competition? Why or why not?

(5) Should the FTC require MARS providers to disclose their historical performance? If so, how should historical performance be measured and disclosed? Could historical performance information mislead some consumers about the likelihood that they will achieve the promised results? How do the potential benefits of such a disclosure compare to the potential costs? If the FTC requires this disclosure, what if any disclosure should be required of new entrants?

4. Section 322.5: Prohibition on Collection of Advance Payments

(1) Proposed § 322.5 specifically prohibits the collection of any fee or other consideration for MARS until after the provider has achieved all of the results the provider represented, expressly or by implication, to the consumer that the service would achieve, and that is consistent with consumers' reasonable expectations about the service. Should MARS providers be required to achieve these results to receive payment? Why or why not? Would an alternative standard for receiving payment be more appropriate? If so, describe the alternative standard and discuss its relative costs and benefits.

(a) In particular, the Notice of Proposed Rulemaking to amend the Telemarketing Sales Rule to address the sale of debt relief services, 74 FR 41988 (Aug. 19, 2009) prohibits:

> Requesting or receiving payment of any fee or consideration from a person for any debt relief service until the seller has provided the customer with documentation in the form of a settlement agreement, debt management plan, or other such valid contractual agreement, that the particular debt has, in fact, been renegotiated, settled, reduced, or otherwise altered.

Should the standard be the same as or different than the standard articulated for debt relief services in the proposed amendments to the TSR?

(b) Would it be appropriate for the Commission to consider allowing providers to collect a limited initial fee or set-up fee at the beginning of MARS being provided? Would this provide sufficient protection for consumers? Why or why not? Do providers currently use this payment model in the MARS industry and, if so, how much do they collect upfront from consumers and in total? For what purposes do providers use such fees? What has been the experience of states that have limited the amount of the initial fee or set-up fee providers may charge consumers? If providers were permitted to collect an initial or set-up fee, what fees should be limited and what amount should be permitted?

(c) Should MARS providers who promise that consumers will obtain a specific end result (*e.g.*, a successful loan modification) be allowed to charge partial or piecemeal fees for intermediate results (*e.g.*, helping the consumer fill out required forms to apply for the loan modification)? Why or why not? Would allowing providers to charge fees for intermediate services provide an opportunity for fraudulent providers to charge consumers without ever obtaining the result consumers expect, such as a loan modification, and thus evade the advance fee ban?

(d) Should MARS providers be allowed to charge fees for individual services (*e.g.*, helping consumers fill out required forms) so long as they do *not* promise that consumers will obtain a specific end result (*e.g.*, a successful loan modification)? Why or why not? If MARS providers are allowed to collect such fees in this situation, should they be required to disclose that they are not promising to deliver a specific, or any, end result? Would such a disclosure be sufficient to avoid consumer deception?

(e) What are the costs and benefits of providers charging fees based on the level of the benefit provided? For example, what is the effect if MARS providers charge fees that are proportional to the size of the loan modification ultimately obtained for the consumer? If MARS providers charge such fees for loan modifications, should a minimum level of benefit be required? If a minimum level of benefit is required, should the minimum level be a substantial and permanent reduction in the amount of the scheduled mortgage payments, or something else? Should providers be required to charge fees based on the level of the benefit provided? Why or why not?

(2) In certain cases, proposed § 322.5 specifies that a MARS provider cannot request or receive payment until after it delivers a "mortgage loan modification" to the consumer. Mortgage loan modification is defined as a "the contractual change to one or more terms of an existing dwelling loan between the consumer and the owner of such debt that substantially reduces the consumer's scheduled periodic payments." Under the proposed Rule, such change must be "permanent for a period of five years or more;" or "will become permanent for a period of five years or more once the consumer successfully completes a trial period of three months or less." Is this the appropriate standard to ensure that providers confer on consumers the benefit they expect? Why or why not? Are there alternative standards that should be applied? If so, describe the suggested standard and explain the relative costs and benefits of the standard.

(a) Does the definition of "mortgage loan modification" define the conditions for payment clearly enough? Why or why not? In particular, does the term "substantially" need to be defined and, if so, what would constitute a substantial reduction for the consumer? Similarly, should the term "permanent" be modified to ensure that consumers receive a benefit consistent with reasonable expectations? If so, describe the suggested modifications and discuss the relative costs and benefits of each modification.

(3) What benefits do consumers paying fees in advance of performance provide to consumers or competition? What evidence is there that consumers who purchase MARS fail to pay the fees if fees are not collected in advance? What evidence is there that without collecting fees in advance providers could not fund their operations? Will it no longer be economically feasible for covered entities to provide particular types of services if this fee restriction is imposed? Which services will it be no longer economically feasible to provide and why?

(4) Would it be appropriate to allow providers to use escrow accounts to collect their fees upfront? What are the costs and benefits of using escrow accounts?

(a) To what extent do providers of MARS currently use escrow accounts? If so, how are these escrows structured, for example, what conditions must be met before providers are entitled to withdraw money from the escrows? Have providers abused escrow accounts, for example, by making unauthorized withdrawals or refusing to return money to consumers when services are not performed? What has been the

experience in states that allow escrows for MARS? What has been the experience of the states with respect to these escrows, for example, have the states observed abuses and, if so, what? Are there types of escrows used for other services that providers of MARS could use that would provide sufficient protection for consumers? Why or why not?

(b) If escrows are allowed in connection with consumers paying fees to MARS providers, how should the escrows be structured? What restrictions and limitations are needed to protect consumers, for example, should any funds held in escrow be returned automatically to consumers if services are not completed within a certain time period? What type of accounting and reporting should be required for escrow accounts, if any? Are there entities that could provide escrow services in connection with MARS and, if so, which types of entities? Is there a way to determine whether a provider of escrow services is more likely to perform its duties adequately, for example, are there applicable licensing requirements?

(5) To what extent does the proposed Rule's advance fee ban (§ 322.5) prevent harm to consumers that would not be eliminated by its prohibition against misrepresentations (§ 322.3) and the disclosure requirements (§ 322.4)? If you believe that proposed § 322.5 does not provide any additional protection, please explain why.

(6) Should any type or portion of fees charged by entities offering MARS be exempted from proposed § 322.5? If so, which fees, either by type of entity providing the service or by type of fee, should be exempted, and why?

(7) Should consumers have the right to rescind any agreement to purchase MARS within a certain time period? Should a right of rescission be a substitute for, or complement to, the advance fee ban? Why or why not? If the proposed Rule contained a right of rescission, how long should consumers have to rescind their contracts? What are the relative costs and benefits of giving consumers the right to rescind the contract?

(8) Proposed § 322.5 prohibits the collection of any fee or other consideration until after the MARS provider provides the consumer with documentation of achieved results. What type of documentation should be required, for example, should the provider be required to produce a copy of a written contract between the lender or servicer and the consumer setting forth the specific concession? In the case of "mortgage loan modifications," proposed § 322.5 requires that the provider produce a "contractual agreement between the dwelling loan holder or servicer and the consumer." For a mortgage loan modification, is this the appropriate form of documentary proof, or are there alternatives? Describe each suggested alternative and discuss its relative costs and benefits.

5. Section 322.6: Assisting and Facilitating

(1) Is proposed § 322.6 the appropriate standard to address assisting and facilitating in connection with the sale of MARS? Why or why not? What types of entities provide substantial assistance or support to MARS providers? What evidence is there that these entities know or consciously avoid knowing that MARS providers are violating the proposed Rule? What would be the costs to these entities of determining whether MARS providers are in compliance with the proposed Rule? What effect would these costs have on those who assist the operation of MARS providers?

6. Section 322.7: Exemptions

(1) Proposed § 322.7 exempts attorneys from proposed § 322.3(a)'s ban on instructing consumers not to communicate with their lenders or servicers, so long as the attorneys are licensed to practice in the state where the consumer resides. Is this exemption appropriate? Why or why not? What are the costs and benefits of allowing attorneys to make these types of statements? Are there other types of entities that should be exempted from this provision? If so, identify which entities and explain why.

(2) Proposed § 322.7 exempts an attorney from the advance fee ban if the attorney: (a) provides MARS in connection with a bankruptcy petition or other court proceeding; (b) is licensed to practice in the state where the consumer resides; and (c) is in compliance with applicable state laws, including licensing regulations. Is this exemption appropriate? Why or why not? Should the exemption be broader to cover other legal services attorneys provide? If so, describe other services and discuss the costs and benefits of exempting them from the advance fee ban. What is the experience of states with laws governing MARS that exempt attorneys?

(3) What types of MARS services apart from representation in litigation (*e.g*, calling lenders or servicers on consumers' behalf) do attorneys perform that would not qualify for the exemption in proposed § 322.7? How prevalent is the provision of these non-litigation legal services, and how do they provide consumers with legitimate mortgage relief? If such services are provided, what types and amounts of fees do these providers charge, and how are these fees collected? Are trust or escrow accounts used to hold these fees while services are being performed? Does the proposed advance fee ban unduly restrict the provision of these non-litigation legal services? If so, are there any alternatives to the proposed advance fee ban, such as escrows accounts, that will adequately protect consumers from unfair and deceptive practices, while allowing attorneys to continue to provide such bona fide legal services to consumers?

(4) Are there entities other than attorneys that should be exempt from the advance fee ban and, if so, which entities? What types of MARS services do these entities perform? For example, do financial planners or advisors provide MARS services and, if so, what types of services do they perform? How prevalent is the provision of MARS services by any such non-attorney entities? What types and amount of fees do these non-attorney entities charge? How would the advance fee ban affect the provision of these types of services to consumers? If an exemption is appropriate, please describe in detail the entities and services that should be covered by the exemption and how the exemption should be structured?

7. Section 322.9: Recordkeeping and Compliance Requirements

(1) Proposed § 322.9 requires a 24-month document retention period. Is this period of time adequate for effective and efficient law enforcement? Does it impose unnecessary costs on MARS providers? Should the Commission consider an alternative document retention period, for example, a time period commensurate with the five-year statute of limitations for an FTC action for civil penalties? If so, explain what you believe to be the appropriate time period, and why?

(2) Proposed § 322.9(b)(1) sets forth steps MARS providers must take to monitor and ensure that all their employees and independent contractors comply with the proposed Rule. For example, the proposed Rule requires MARS providers to perform random, blind, taping and testing of telemarketer presentations, to establish a procedure for receiving and responding to consumer complaints, and to determine the number and nature of consumer complaints regarding employees and independent contractors. Are these monitoring requirements sufficient to ensure compliance with the Rule? Should the Commission consider

alternative monitoring provisions? What would be the costs and benefits of such alternatives?

(3) Proposed § 322.9(b)(4) mandates that MARS providers maintain documentation of their compliance with §§ 322.9(b)(1)-(3) of the Rule. Should the retention period for these documents be a 24-month period or an alternative period of time? For example, would a time period commensurate with the five-year statute of limitations for an FTC action for civil penalties be more appropriate? For each suggested time period, discuss why you believe it would be appropriate.

(4) Proposed § 322.9(c) permits MARS providers to retain documents in any form and in the same manner, format, or place as they keep such records in the ordinary course of business. Is this flexibility warranted in the context of MARS? Should the Commission specify how documents should be retained? If so, explain what you believe to be the appropriate standard for retaining documents.

Interested parties are invited to submit written comments electronically or in paper form. Comments should refer to "Mortgage Assistance Relief Services Rulemaking, Rule No. R911003" to facilitate the organization of comments. Please note that your comment – including your name and your state – will be placed on the public record of this proceeding, including on the publicly accessible FTC website, at (*http://www.ftc.gov/os/publiccomments.shtm*).

Because comments will be made public, they should not include any sensitive personal information, such as any individual's Social Security number; date of birth; driver's license number or other state identification number, or foreign country equivalent; passport number; financial account number; or credit or debit card number. Comments also should not include any sensitive health information, such as medical records or other individually identifiable health information. In addition, comments should not include any "[t]rade secret or any commercial or financial information which is obtained from any person and which is privileged or confidential. . . . ," as provided in Section 6(f) of the FTC Act, 15 U.S.C. 46(f), and Commission Rule 4.10(a)(2), 16 CFR 4.10(a)(2). Comments containing material for which confidential treatment is requested must be filed in paper form, must be clearly labeled "Confidential," and must comply with FTC Rule 4.9(c), 16 CFR 4.9(c).[226]

Because paper mail addressed to the FTC is subject to delay due to heightened security screening, please consider submitting your comments in electronic form. Comments filed in electronic form should be submitted at (*http://public.commentworks.com/ftc/MARS-NPRM*) and following the instructions on the web-based form. To ensure that the Commission considers an electronic comment, you must file it on the web-based form at (*http://public.commentworks.com/ftc/MARS-NPRM*). If this Notice appears at (*http://www.regulations.gov/search/Regs/home.html#home*), you may also file an electronic comment through that website. The Commission will consider all comments forwarded to it by regulations.gov. You may also visit the FTC website at (*www.ftc.gov*) to read the Notice and the news release describing it.

A comment filed in paper form should include the reference "Mortgage Assistance Relief Services Rulemaking, Rule No. R911003" both in the text of the comment and on the envelope, and should be mailed or delivered to the following address: Federal Trade Commission, Office of the Secretary, Room H-135 (Annex W), 600 Pennsylvania Avenue, NW, Washington, DC 20580. The FTC is requesting that any comment filed in paper form be sent by courier or overnight service, if possible, because U.S. postal mail in the Washington, DC area and at the Commission is subject to delay due to heightened security precautions.

Comments on any proposed filing, recordkeeping, or disclosure requirements that are subject to the paperwork burden review under the Paperwork Reduction Act should additionally be submitted to: Office of Information and Regulatory Affairs, Office of Management and Budget (OMB), Attention: Desk Officer for Federal Trade Commission. Comments should be submitted via facsimile to (202) 395-5167 because U.S. postal mail at the OMB is subject to delay due to heightened security precautions.

The FTC Act and other laws the Commission administers permit the collection of public comments to consider and use in this proceeding as appropriate. The Commission will consider all timely and responsive public comments it receives, whether filed in paper or electronic form. Comments received will be available to the public on the FTC website, to the extent practicable, at (*http://www.ftc.gov/os/publiccomments.htm*). As a matter of discretion, the Commission makes every effort to remove home contact information for individuals from the public comments it receives before placing those comments on the FTC website. More information, including routine uses permitted by the Privacy Act, may be found in the FTC's privacy policy, at (*http://www.ftc.gov/ftc/privacy.shtm*).

## V. Communications by Outside Parties to the Commissioners or Their Advisors

Written communications and summaries or transcripts of oral communications respecting the merits of this proceeding from any outside party to any Commissioner or Commissioner's advisor will be placed on the public record.[227]

## VI. Regulatory Flexibility Act

The Regulatory Flexibility Act of 1980 (RFA)[228] requires the Commission to provide an Initial Regulatory Flexibility Analysis (IRFA) with a proposed Rule, and a Final Regulatory Flexibility Analysis (FRFA) with a final rule, unless the Commission certifies that the rule will have no significant economic impact on a substantial number of small entities.[229]

The Commission anticipates that the proposed MARS Rule will have no significant economic impact on a substantial number of small entities. As noted above, the proposed Rule will prevent unfair and deceptive conduct by MARS providers through a combination of conduct prohibitions, disclosures, affirmative compliance obligations, and recordkeeping provisions. As discussed in detail in the ANPR, the proposed Rule's reach is limited. First, the

[226] The comment must be accompanied by an explicit request for confidential treatment, including the factual and legal basis for the request, and must identify the specific portions of the comment to be withheld from the public record. The request will be granted or denied by the Commission's General Counsel, consistent with applicable law and the public interest. *See* 16 CFR 4.9(c).

[227] *See* 16 CFR 1.26(b)(5).

[228] 5 U.S.C. 601-612.

[229] 5 U.S.C. 603-605. Covered entities under the proposed Rule will be classified as small businesses if they satisfy the Small Business Administrator's relevant size standards, as determined by the Small Business Size Standards component of the North American Industry Classification System (NAICS). Because a wide range of individuals and companies may provide mortgage assistance relief services to homeowners, no one classification is applicable to this rulemaking. The closest NAICS size standards relevant to this rulemaking is $7-8.5 million maximum in annual receipts. That is the range in size standard for comparable professional and support services, such as those for lawyers ($7 million), tax preparation services ($7 million), certified public accountants ($8.5 million), human resources consulting services ($7 million), and marketing consulting services ($7 million).

proposed Rule will cover entities that are within the FTC's jurisdiction under the FTC Act. The FTC Act specifically excludes banks, thrifts, and federal credit unions from the agency's jurisdiction. Further, the proposed definition of "mortgage assistance relief service provider" is limited to third parties offering for-fee services and does not extend to free services provided by lenders or mortgage servicers and their agents. In addition, the proposed Rule would provide attorneys with a limited exemption from the advance fee ban, as well as with a broad exemption from its prohibition against directing consumers not to contact their lender or servicer.

As detailed below, the Commission believes that the proposed Rule is likely to cover several hundred MARS providers. Although the Commission does not know the precise number of such providers, its conservative estimate is that the Rule will cover approximately 500 providers. It is not known, however, how many of those 500 providers, if any, are small entities. The Commission nonetheless believes that the number of providers that are small entities is not likely to be substantial and, therefore, the proposed Rule is not likely to have a significant economic impact on a substantial number of small entities. Accordingly, this document serves as notice to the Small Business Administration of the Commission's certification of no economic impact. Nonetheless, the FTC has determined to prepare the following analysis:

*A. Description of the Reasons That Action by the Agency is Being Considered*

The Commission proposes, and seeks comment on, a rule to implement Section 626 of the Omnibus Appropriations Act, as amended by the Credit CARD Act, which mandates that the Commission initiate a rulemaking with respect to mortgage loans. Section 511 of the Credit CARD Act clarified that the Commission's rulemaking should relate to unfair or deceptive acts or practices, and stated that the FTC's implementing rules should address "loan modification and foreclosure rescue services." In addition, the proposed Rule will cover those entities over which the FTC has jurisdiction under the FTC Act – entities other than banks, thrifts, federal credit unions, and nonprofits that engage in the conduct the rule would cover. Through this document, the Commission proposes, and seeks comment on, prohibitions, disclosures, affirmative compliance requirements, and recordkeeping provisions aimed at for-profit MARS providers to prevent deceptive and unfair practices that harm borrowers, consistent with the goals of the Act.

*B. Statement of the Objectives of, and Legal Basis for, the Proposed Rule*

The proposed Rule is intended to implement Section 626 of the Omnibus Appropriations Act, as amended by the Credit CARD Act, which directs the Commission to initiate a rulemaking with respect to mortgage loans. As noted above, the Omnibus Act, as amended, directs the Commission to initiate a rulemaking related to unfair or deceptive acts or practices with respect to mortgage loans. Through the rulemaking, the Commission seeks to prevent deceptive and unfair acts and practices in the mortgage assistance relief services industry, which has been the subject of numerous individual law enforcement actions under Section 5 of the FTC Act.

*C. Small Entities to Which the Proposed Rule Will Apply*

The proposed Rule will apply to mortgage assistance relief service providers. Based upon its knowledge of the industry, the Commission believes that a variety of individuals and companies provide or purport to provide such services, including telemarketers, mortgage brokers, lead generators, payment processors, contractors that provide back-room services, and attorneys.

Comments in response to the ANPR suggest that the number of MARS providers purporting to assist distressed homeowners is growing in response to the crisis in the home mortgage industry,[230] but do not offer empirical data on the number of such entities.[231] The available data suggest that there are a few hundred such providers. For example, FTC staff sent warning letters to 71 MARS providers in the course of its investigation of the industry. In its comment, the National Community Reinvestment Coalition reported testing of 100 MARS providers. NAAG stated that its members have investigated 450 companies and brought suits against 130 under state law.[232] Accordingly, Commission staff has taken a conservative approach and estimates that there are approximately 500 mortgage assistance relief service providers. Nonetheless, staff cannot readily estimate the number of such providers, if any, that are small entities. Accordingly, the Commission specifically requests additional comment on: (1) the number of individuals or entities that provide mortgage assistance relief services; and (2) the number of such providers, if any, that are small entities.

*D. Projected Reporting, Recordkeeping, and Other Compliance Requirements*

The proposed Rule sets forth specific recordkeeping requirements to ensure efficient and effective law enforcement, to identify individual wrongdoers, and to identify potential injured consumers. In large measure, the recordkeeping provisions require MARS providers to retain documents – consumer files and documentation of consumer transactions – that are kept in the ordinary course of business. Other proposed recordkeeping requirements would ensure covered entities can demonstrate compliance with specific proposed Rule provisions, which are discussed below.

The proposed Rule has three other kinds of compliance requirements: (1) prohibited acts and practices that are deceptive or unfair; (2) disclosures to ensure that consumers receive the truthful and accurate information they need to make an informed decision whether to purchase MARS; and (3) compliance obligations to monitor sales promotions and consumer complaints. As discussed above, these requirements are necessary to prevent unfair or deceptive acts and practices, to ensure compliance with the Rule, and to achieve effective law enforcement.

The classes of small entities, if any, covered by the rule have been discussed in the preceding section of this analysis.[233] The professional or other skills necessary for compliance with the proposed Rule are discussed in the Paperwork Reduction Act analysis elsewhere in this document.[234]

*E. Duplicative, Overlapping, or Conflicting Federal Rules*

The Commission has not identified any other federal statutes, rules, or policies that would duplicate, overlap, or conflict with the proposed Rule. The Commission invites comment on this issue.

[230] *See, e.g.,* MA AG at 1-2; NAAG at 3-4; OH AG at 1.

[231] For example, NAAG explained that it is difficult to obtain empirical data on providers "due to the prominence of internet-based companies and their ephemeral nature. The difficulty of gathering information is increased due to the fact many of these companies operate primarily over the internet and do not maintain a physical presence in the states in which they do business." NAAG at 3.

[232] NAAG at 4.

[233] *See supra* § VI.C.

[234] *See infra* § VII.

*F. Significant Alternatives to the Proposed Rule Amendments*

As previously noted, the proposed Rule is intended to prevent deceptive and unfair acts and practices in the mortgage assistance relief services industry, as mandated by the Act. The proposed Rule is intended to achieve that goal without creating unnecessary compliance costs. To achieve that goal, the Commission proposes a definition of "mortgage assistance relief service provider" that focuses on for-fee third-party providers. The term does not include the mortgage loan holder or servicer of a mortgage, or any agent of either, provided that the agent does not receive any money or other valuable consideration from the borrower for the agent's own benefit.[235] Further, as discussed in Section III.I above, providers generally must keep only consumer files and consumer transactional records that are retained in the ordinary course of business. In addition, proposed § 322.9(c) states that providers may keep the records in any form and in the same manner, format, or place as they keep records in the ordinary course of business.

The proposed Rule also limits the type of information that must be retained to a minimum. For example, providers must maintain records relating to actual transactions with customers; they are not required to keep records if consumers do not sign contracts or otherwise agree to an offer of mortgage assistance relief services. In addition, providers must retain only materially different versions of advertising and related materials.[236] Finally, the proposed Rule calls for a 24-month record retention period. The Commission believes this is the minimum amount of time necessary for consumers to report violations of the Rule and for the Commission to complete investigations of noncompliance and to identify victims.

Furthermore, the recordkeeping and disclosure requirements are format-neutral; they would not preclude the use of electronic methods that might reduce compliance burdens. In addition, the Commission is not aware of any feasible or appropriate exemptions for small entities because the proposed Rule attempts to minimize compliance burdens for all entities.

Nonetheless, the Commission seeks additional comment regarding: (1) the existence of small entities for which the proposed Rule would have a significant economic impact and (2) suggested alternatives, including potential exemptions for small entities, that would reduce the economic impact of the proposed Rule on such small entities. If the comments filed in response to this document identify any small entities that would be significantly affected by the proposed Rule, as well as alternatives that would reduce compliance costs on such entities, the Commission will consider the feasibility of such alternatives and determine whether they should be incorporated into any final Rule.

## VII. Paperwork Reduction Act

The Commission is submitting this proposed Rule and a Supporting Statement to the Office of Management and Budget for review under the Paperwork Reduction Act (PRA), 44 U.S.C. 3501-21. The disclosure and recordkeeping requirements of the proposed Rule constitute "collection[s] of information" for purposes of the PRA.[237] The associated PRA burden analysis follows.

*A. Disclosure Requirements*

As discussed in the preamble, the proposed Rule requires several disclosures that MARS providers must place in commercial communications for MARS and must state to specific consumers who seek such services. In commercial communications, providers must include the following statement: "IMPORTANT NOTICE: (Name of company) is a for-profit business not associated with the government. This offer has not been approved by the government or your lender."

In addition, providers must disclose to consumers, in any advertisement or other commercial communication directed to a specific consumer, the cost of those services and the following statements: (1) that "(Name of company) is a for-profit business not associated with the government;" (2) that the "offer has not been approved by the government or your lender"; and, in some instances; (3) "Even if you buy our service, your lender may not agree to change your loan."[238]

*B. Recordkeeping Requirements*

The proposed Rule also imposes several recordkeeping requirements. Several record retention requirements, however, pertain to records that are customarily kept in the ordinary course of business, such as copies of contracts and consumer files containing the name and address of the borrower, and materially different versions of sales scripts and related promotional materials. As such, the retention of these documents does not constitute a "collection of information," as defined by OMB's regulations that implement the PRA.[239]

In other instances, the proposed Rule requires MARS providers to create as well as retain documents demonstrating their compliance with specific Rule requirements. These include the requirement that providers document the following activities: (1) the performance of promised services and delivery of promised services before seeking payment from a borrower; (2) monitoring of sales presentations by tape recording and testing of oral representations; (3) establishing a procedure for receiving and responding to consumer complaints; (4) ascertaining, in some instances, the number and nature of consumer complaints; and (5) taking corrective action if sales persons fail to comply with the proposed Rule, including training and disciplining sales persons.

*C. Estimated Hours Burden and Associated Labor Costs*

Commission staff believes that the above noted disclosure and recordkeeping requirements will impact approximately 500 MARS providers. The related PRA burden assumptions and calculations follow.

(1) Disclosure Requirements

The proposed Rule calls for the disclosure of specific items of information to consumers. Largely, the content of the disclosures is prescribed. Thus, the PRA burden on providers is greatly reduced.[240] Staff conservatively estimates, however, that the incremental burden to prepare these documents will be approximately 2 hours. Staff assumes that management personnel will implement the disclosure requirements,

[235] *See* ABA at 8; AFSA at 1, 3; Chase at 1; CMC at 1; MBA at 3-4 (urging the Commission not to cover mortgage servicers or third parties retained by mortgage servicers to assist homeowners on a not-for-profit basis).

[236] *See TSR Statement of Basis and Purpose*, 60 FR at 43858 (recognizing the burden imposed by requiring the retention of each and every script, advertisement, and promotional piece, "much of which may be worthless or redundant from a law enforcement standpoint.").

[237] *See* 44 U.S.C. 3502(3)(A).

[238] Proposed § 322.4 sets forth the format and content of the notice, which varies depending upon the medium used.

[239] *See* 5 CFR 1320.3(b)(2).

[240] According to OMB, the public disclosure of information originally supplied by the Federal government to a recipient for the purpose of disclosure to the public is excluded from the definition of a "collection of information." *See* 5 CFR 1320.3(c)(2).

at an hourly rate of $45.22.[241] Based upon these estimates and assumptions, total labor cost for 500 MARS providers to prepare the required documents is $45,220 (500 providers x 2 hours each x $45.22 per hour).

(2) Recordkeeping Requirements

As noted above, the proposed Rule contemplates that MARS providers will create and retain records demonstrating their compliance with several obligations set forth in the Rule. Staff estimates that each of the estimated 500 providers will spend approximately 25 hours to institute procedures to monitor sales presentations. Although Commission staff cannot estimate with precision the time required to document compliance with the proposed Rule provisions, it is reasonable to assume that providers will each spend approximately 100 hours to do this. This includes preparing records demonstrating steps taken to seek payment for services performed, handling consumer complaints, and conducting training. Additionally, staff estimates that retention and filing of these records will require approximately 3 hours per year per provider.

Commission staff assumes that management personnel will prepare the required disclosures at an hourly rate of $45.22.[242] Based upon the above estimates and assumptions, the total labor cost to prepare the required documents to demonstrate compliance is $2,826,250 (500 providers x 125 hours each x $45.22 per hour).

Commission staff further assumes that office support file clerks will handle the proposed Rule's record retention requirements at an hourly rate of $13.24.[243] Based upon the above estimates and assumptions, the total labor cost to retain and file documents is $19,860 (500 providers x 3 hours each x $13.24 per hour).

*D. Estimated Capital/Other Non-Labor Cost Burden*

The proposed Rule should impose no more than minimal non-labor costs. Staff assumes that each of the estimated 500 MARS providers will make required disclosures in writing to approximately 1,000 consumers annually.[244] Under these assumptions, non-labor costs will be limited mostly to printing and distribution costs. At an estimated $1 per disclosure, total non-labor costs would be $1,000 per provider or, cumulatively for all providers, $500,000.

The Commission invites comments that will enable it to: (1) evaluate whether the proposed collections of information are necessary for the proper performance of the functions of the Commission, including whether the information will have practical utility; (2) evaluate the accuracy of the Commission's estimate of the burden of the proposed collections of information, including the validity of the methodology and assumptions used; (3) enhance the quality, utility, and clarity of the information to be collected; and (4) minimize the burden of the collections of information on those who must comply, including through the use of appropriate automated, electronic, mechanical, or other technological techniques or other forms of information technology.

## APPENDIX A – LIST OF COMMENTERS AND SHORT-NAMES/ACRONYMS

MARS Proposed Rule

| Short-name/Acronym | Commenter |
|---|---|
| **ABA** | American Bankers Association |
| **AFSA** | American Financial Services Association |
| **ALMSC** | American Loss Mitigation Solutions Corp. |
| **CRC** | California Reinvestment Coalition, et al. |
| **CMC** | Consumer Mortgage Coalition |
| **CSBS** | Conference of State Bank Supervisors |
| **CUNA** | Credit Union National Association |
| **Chase** | Chase Home Finance, LLC |
| **Gutner** | John Gutner |
| **HPC** | Housing Policy Counsel |
| **IL AG** | Illinois Office of the Attorney General |
| **MA AG** | Massachusetts Office of the Attorney General |
| **MBA** | Mortgage Bankers Association |
| **MN AG** | Office of the Minnesota Attorney General |
| **NAAG** | National Association of Attorneys General |
| **NAR** | National Association of Relators |
| **NCRC** | National Community Reinvestment Coalition |
| **NCLC** | National Consumer Law Center, et al. |
| **NCLR** | National Council of La Raza |
| **NYC DCA** | New York City Department of Consumer Affairs |
| **OTS** | Office of Thrift Supervision |
| **OH AG** | Ohio Attorney General |
| **Shriver** | Sargent Shriver National Center on Poverty Law |
| **TNLMA** | The National Loss Mitigation Association |

[241] This estimate is based on an averaging of the mean hourly wages for sales and financial managers provided by the Bureau of Labor Statistics. BUR. OF LABOR STATISTICS, NATIONAL COMPENSATION SURVEY: OCCUPATIONAL EARNINGS IN THE UNITED STATES, 2008, tbl. 3, at 3-1 (2009), (*http://www.bls.gov/ncs/ncswage2008.pdf*) ("Occupational Earnings Survey").

[242] Id.

[243] This estimate is based on mean hourly wages for office file clerks found at OCCUPATIONAL EARNINGS SURVEY, tbl. 3, at 3-22.

[244] Associated costs would be reduced if the disclosures are made electronically.

**Appendix B – List of FTC MARS Law Enforcement Actions**

**MARS Proposed Rule**

- *FTC v. First Universal Lending, LLC*, No. 09-CV-82322 (S.D. Fla. filed Nov. 24, 2009)
- *FTC v. Truman Foreclosure Assistance, LLC*, No. 09-23543 (S.D. Fla. filed Nov. 23, 2009)
- *FTC v. Debt Advocacy Ctr, LLC*, No. 1:09CV2712 (N.D. Ohio filed Nov. 19, 2009)
- *FTC v. Kirkland Young, LLC*, No. 09-23507 (S.D. Fla. filed Nov. 18, 2009)
- *FTC v. 1st Guar. Mortgage Corp.*, No. 09-DV-61846 (S.D. Fla. filed Nov. 17, 2009)
- *FTC v. Washington Data Res., Inc.*, No. 8:09-cv-02309-SDM-TBM (M.D. Fla. filed Nov. 12, 2009)
- *FTC v. Fed. Housing Modification Dep't*, No. 09-CV-01753 (D.D.C. filed Sept. 15, 2009)
- *FTC v. Infinity Group Servs.*, No. SACV09-00977 DOC (MLGx) (C.D. Cal. filed Aug. 26, 2009)
- *FTC v. Loan Modification Shop, Inc.*, No. 3:09-cv-00798 (JAP) (D.N.J., amended complaint filed Aug. 4, 2009)
- *FTC v. Apply2Save, Inc.*, No. 2:09-cv-00345-EJL-CWD (D. Idaho filed July 14, 2009)
- *FTC v. Loss Mitigation Servs., Inc.*, No. SACV09-800 DOC (ANX) (C.D. Cal. filed July 13, 2009)
- *FTC v. Sean Cantkier*, No. 1:09-cv-00894 (D.D.C., amended complaint filed July 10, 2009)
- *FTC v. LucasLawCenter "Inc.,"* No. SACV-09-770 DOC (ANX) (C.D. Cal. filed July 7, 2009)
- *FTC v. US Foreclosure Relief Corp.*, No. SACVF09-768 JVS (MGX) (C.D. Cal. filed July 7, 2009)
- *FTC v. Freedom Foreclosure Prevention Specialists, LLC*, No. 2:09-cv-01167-FJM (D. Ariz. filed June 1, 2009)
- *FTC v. Data Med. Capital, Inc.*, No. SA-CV-99-1266 AHS (Eex) (C.D. Cal., contempt application filed May 27, 2009)
- *FTC v. Dinamica Financiera LLC*, No. 09-CV-03554 CAS PJWx (C.D. Cal. filed May 19, 2009)
- *FTC v. Fed. Loan Modification Law Ctr., LLP*, No. SACV09-401 CJC (MLGx) (C.D. Cal. filed Apr. 3, 2009)
- *FTC v. Thomas Ryan*, No. 1:09-00535 (HHK) (D.D.C. filed Mar. 25, 2009)
- *FTC v. Home Assure, LLC*, No. 8:09-CV-00547-T-23T-Sm (M.D. Fla. filed Mar. 24, 2009)
- *FTC v. New Hope Prop. LLC*, No. 1:09-cv-01203-JBS-JS (D.N.J. filed Mar. 17, 2009)
- *FTC v. Hope Now Modifications, LLC*, No. 1:09-cv-01204-JBS-JS (D.N.J. filed Mar. 17, 2009)
- *FTC v. National Foreclosure Relief, Inc.*, No. SACV09-117 DOC (MLGx) (C.D. Cal. filed Feb. 2, 2009)
- *FTC v. United Home Savers, LLP*, No. 8:08-cv-01735-VMC-TBM (M.D. Fla. filed Sept. 3, 2008)
- *FTC v. Foreclosure Solutions, LLC*, No. 1:08-cv-01075 (N.D. Ohio filed Apr. 28, 2008)
- *FTC v. Mortgage Foreclosure Solutions, Inc.*, No. 8:08-cv-388-T-23EAJ (M.D. Fla. filed Feb. 26, 2008)
- *FTC v. Nat'l Hometeam Solutions, Inc.*, No. 4:08-cv-067 (E.D. Tex. filed Feb. 26, 2008)
- *FTC v. Safe Harbour Foundation of Florida, Inc.*, No. 08-C-1185 (N.D. Ill. filed Feb. 27, 2008).

**VIII. Proposed Rule**

**List of Subjects in 16 CFR Part 322**

Consumer Protection, Trade Practices, Telemarketing.

Pursuant to the Omnibus Appropriations Act, as amended by the Credit CARD Act,[245] for the reasons set forth in the preamble, the Federal Trade Commission is proposing to amend title 16, Code of Federal Regulations, by adding a new part 322, to read as follows:

## PART 322 – MORTGAGE ASSISTANCE RELIEF SERVICES RULE

Section Contents

§ 322.1 Scope of regulations of this part.
§ 322.2 Definitions.
§ 322.3 Prohibited representations.
§ 322.4 Required disclosures.
§ 322.5 Prohibition on collection of advance payments.
§ 322.6 Assisting and facilitating.
§ 322.7 Exemptions.
§ 322.8 Waiver not permitted.
§ 322.9 Recordkeeping and compliance requirements.
§ 322.10 Actions by states.
§ 322.11 Severability.

**Authority:** Pub. L. 111-8, § 626, 123 Stat. 524, as amended by Pub. L. No. 111-24, § 511, 123 Stat. 1734.

### § 322.1 Scope of regulations in this part.

This part implements the 2009 Omnibus Appropriations Act, Pub. L. 111-8, § 626, 123 Stat. 524 (Mar. 11, 2009), as amended by the Credit Card Accountability Responsibility and Disclosure Act of 2009, Pub. L. 111-24, § 511, 123 Stat. 1734 (May 22, 2009).

### § 322.2 Definitions.

(a) "Commercial communication" means any written or verbal statement, illustration, or depiction, whether in English or any other language, that is designed to effect a sale or create interest in the purchasing of goods or services, whether it appears on or in a label, package, package insert, radio, television, cable television, brochure, newspaper, magazine, pamphlet, leaflet, circular, mailer, book insert, free standing insert, letter, catalogue, poster, chart, billboard, public transit card, point of purchase display, film, slide, audio program transmitted over a telephone system, telemarketing script, onhold script, upsell script, training materials provided to telemarketing firms, program-length commercial ("infomercial"), the Internet, cellular network, or any other medium. Promotional materials and items and Web pages are included in the term "commercial communication."

(b) "Consumer" means any natural person who owes on any loan secured by a dwelling.

(c) "Clear and prominent" means:

(1) In textual communications, the required disclosures shall be in a font easily read by a reasonable consumer, of a color or shade that readily contrasts with the background of the commercial communication, in the same language as each that is substantially used in the commercial communication, parallel to the base of the commercial communication, and, except as otherwise provided in this rule, each letter of the disclosure shall be, at a minimum, the larger of 12-point type or one-half the size of the largest letter or numeral used in the name of the advertised website or telephone number to which consumers are referred to receive information relating to any mortgage assistance relief service. Textual communications include any communications in a written or printed form such as print publications or words displayed on the screen of a computer;

(2) In communications disseminated orally or through audible means, such as radio or streaming audio, the required disclosures shall be delivered in a slow and deliberate manner and in a volume and cadence sufficient for an ordinary consumer to hear and comprehend them;

(3) In communications disseminated through video means, such as television or streaming video, the required disclosures shall appear simultaneously in the audio and visual parts of the commercial communication and be delivered in a manner consistent with paragraphs (c)(1) and (c)(2) of this section. The visual disclosure shall be at least four percent of the vertical picture or screen height and appear for the duration of the oral disclosure;

[245] Pub. L. No. 111-8, § 626, 123 Stat. 524, as amended by Pub. L. No. 111-24, § 511, 123 Stat. 1734.

(4) In communications made through interactive media, such as the Internet, online services, and software, the required disclosures shall be:

(i) Consistent with paragraphs (c)(1), (c)(2), and (c)(3) of this section,

(ii) Made on a separate landing page immediately prior to the page on which the consumer takes any action to incur any financial obligation,

(iii) Unavoidable, *e.g.*, visible to consumers without requiring them to scroll down a webpage, and

(iv) Appear in type at least twice the size as any hyperlink to the company's website or display of the Uniform Resource Locator of the company's website;

(5) In all instances, the required disclosures shall be presented in an understandable language and syntax, and with nothing contrary to, inconsistent with, or in mitigation of the disclosures used in any communication of them; and

(6) For program-length television, radio, or Internet-based multi-media commercial communications, the required disclosures shall be made at the beginning, near the middle, and at the end of the commercial communication.

(d) "Dwelling" means a residential structure containing four or fewer units, whether or not that structure is attached to real property, that is primarily for personal, family, or household purposes. The term includes any of the following if used as a residence: an individual condominium unit, cooperative unit, mobile home, or trailer.

(e) "Dwelling loan" means any loan secured by a dwelling, and any associated deed of trust or mortgage.

(f) "Dwelling Loan Holder" means the person who holds a loan secured by a dwelling.

(g) "Material" means likely to affect a person's choice of, or conduct regarding, any mortgage assistance relief service.

(h) "Mortgage Assistance Relief Service" means any service, plan, or program, offered or provided in exchange for consideration on behalf of the consumer, that is represented, expressly or by implication, to assist or attempt to assist the consumer with any of the following:

(1) Negotiating, obtaining, or arranging a modification of any term of a dwelling loan, including a reduction in the amount of interest, principal balance, monthly payments, or fees;

(2) Stopping, preventing, or postponing any mortgage or deed of trust foreclosure sale for a dwelling or any repossession of the consumer's dwelling, or otherwise saving the consumer's dwelling from foreclosure or repossession;

(3) Obtaining any forbearance or modification in the timing of payments from any dwelling loan holder or servicer on any dwelling loan;

(4) Negotiating, obtaining, or arranging any extension of the period of time within which the consumer may:

(i) Cure his or her default on a dwelling loan,

(ii) Reinstate his or her dwelling loan,

(iii) Redeem a dwelling, or

(iv) Exercise any right to reinstate a dwelling loan or redeem a dwelling;

(5) Obtaining any waiver of an acceleration clause or balloon payment contained in any promissory note or contract secured by any dwelling; or

(6) Negotiating, obtaining, or arranging:

(i) A short sale of a dwelling,

(ii) A deed-in-lieu of foreclosure, or

(iii) Any other disposition of a dwelling other than a sale to a third party that is not the dwelling loan holder.

(i) "Mortgage Assistance Relief Service Provider" means any person that provides, offers to provide, or arranges for others to provide, any mortgage assistance relief service. This term does not include:

(1) The dwelling loan holder, or any agent of such person, provided that any such agent does not claim, demand, charge, collect, or receive any money or other valuable consideration from the consumer for the agent's benefit;

(2) The servicer of a dwelling loan, or any agent of such person, provided that any such agent does not claim, demand, charge, collect, or receive any money or other valuable consideration from the consumer for the agent's benefit; and

(3) Any nonprofit, bank, thrift, federal credit union, or other person specifically excluded from the Federal Trade Commission's jurisdiction pursuant to 15 U.S.C. 44 and 45(a)(2).

(j) "Person" means any individual, group, unincorporated association, limited or general partnership, corporation, or other business entity.

(k) "Servicer" means the person responsible for receiving any scheduled periodic payments from a consumer pursuant to the terms of any dwelling loan, including amounts for escrow accounts under section 10 of the Real Estate Settlement Procedures Act (12 U.S.C. 2609), and making the payments of principal and interest and such other payments with respect to the amounts received from the consumer as may be required pursuant to the terms of the mortgage servicing loan documents or servicing contract.

**§ 322.3 Prohibited representations.**

It is a violation of this rule for any mortgage assistance relief service provider to engage in the following conduct:

(a) Representing, expressly or by implication, in connection with the advertising, marketing, promotion, offering for sale, or sale of any mortgage assistance relief service that a consumer cannot or should not contact or communicate with his or her lender or servicer.

(b) Misrepresenting, expressly or by implication, any material aspect of any mortgage assistance relief service, including but not limited to:

(1) The likelihood of negotiating, obtaining, or arranging any represented service or result, such as those set forth in § 322.2(h);

(2) The amount of time it will take the mortgage assistance relief service provider to accomplish any represented service or result, such as those set forth in § 322.2(h);

(3) That a mortgage assistance relief service is affiliated with, endorsed or approved by, or otherwise associated with:

(i) The United States Government,

(ii) Any governmental homeowner assistance plan,

(iii) Any Federal, state, or local government agency, unit, or department,

(iv) Any nonprofit housing counselor agency or program,

(v) The maker, holder or servicer of the consumer's dwelling loan, or

(vi) Any other person or program;

(4) The consumer's obligation to make scheduled periodic payments or any other payments pursuant to the terms of the consumer's existing dwelling loan;

(5) The terms or conditions of the consumer's dwelling loan, including but not limited to the amount of debt owed;

(6) The terms or conditions of any refund, cancellation, exchange, or repurchase policy for a mortgage assistance relief service, including but not limited to the likelihood of obtaining a full or partial refund, or the circumstances in which a full or partial refund will be granted, for a mortgage assistance relief service; or

(7) That the mortgage assistance relief service provider has completed the represented services, as specified in § 322.5, or otherwise has a right to claim, demand, charge, collect, or receive payment or other consideration.

**§ 322.4 Required disclosures.**

It is a violation of this rule for any mortgage assistance relief service provider to engage in the following conduct:

(a)(1) Failing to place the following statement, in a clear and prominent

manner, in every commercial communication for any mortgage assistance relief service:

"(Name of company) is a for-profit business not associated with the government. This offer has not been approved by the government or your lender."

(2) In textual communications except for communications not covered by paragraph (b) of this section, the required disclosure also must be preceded by the statement "IMPORTANT NOTICE" in bold-face type.

(b) Failing to disclose, in a clear and prominent manner, in every communication directed at a specific consumer that promotes the sale of any mortgage assistance relief service and occurs prior to the consumer entering into any agreement for the purchase of such service, the following information:

(1) "You will have to pay (insert amount) for this service." For the purposes of this paragraph, the amount "you will have to pay" shall consist of the total amount the consumer must pay to purchase, receive, and use all of the mortgage assistance relief services that are the subject of the sales offer, including, but not limited to, all fees, charges, or penalties;

(2) "(Name of company) is a for-profit business not associated with the government. This offer has not been approved by the government or your lender;" and

(3) In cases where the provider advertises any represented service or result set forth in § 322.2(h) other than paragraph (h)(2), "Even if you buy our service, your lender may not agree to change your loan."

(c) For the disclosures required by paragraph (b) of this section, in textual communications the disclosures also must appear together under the following heading,"IMPORTANT NOTICE: Carefully consider this information before buying this service." The heading must be in bold face font that is two point-type larger than the font size of the required disclosures. In communications disseminated orally or through audible means, wholly or in part, the audio component of the required disclosures must be preceded by the statement "Please consider carefully the following information before buying this service." In telephone communications, the required disclosures must be made at the beginning of the call.

**§ 322.5 Prohibition on collection of advance payments.**

(a) It is a violation of this rule for any mortgage assistance relief service provider to request or receive payment of any fee or other consideration until the provider has:

(1) Achieved all of the results that:

(i) The provider represented, expressly or by implication, to the consumer that the service would achieve, and

(ii) Are consistent with consumers' reasonable expectations about the service; and

(2) Provided the consumer with documentation of such achieved results.

(b) In cases where the provider has represented, expressly or by implication, that it will negotiate, obtain, or arrange a modification of any term of any dwelling loan, the provider shall not request or receive any payment or other consideration until it has:

(1) Obtained a mortgage loan modification for the consumer; and

(2) Provided the consumer documentation of the mortgage loan modification in the form of a written offer from the dwelling loan holder or servicer to the consumer.

(c) For the purposes of paragraph (b) of this section, "mortgage loan modification" means the contractual change to one or more terms of an existing dwelling loan between the consumer and the owner of such debt that substantially reduces the consumer's scheduled periodic payments, where the change is:

(1) Permanent for a period of five years or more; or

(2) Will become permanent for a period of five years or more once the consumer successfully completes a trial period of three months or less.

**§ 322.6 Assisting and facilitating.**

It is a violation of this rule for a person to provide substantial assistance or support to any mortgage assistance relief service provider when that person knows or consciously avoids knowing that the provider is engaged in any act or practice that violates this rule.

**§ 322.7 Exemptions.**

(a) A person licensed to practice law in the state in which the consumer resides is exempt from § 322.3(a) of this rule.

(b) A person licensed to practice law in the state in which the consumer resides is not prohibited under § 322.5 from requesting or receiving compensation if such person complies with all applicable state laws, including licensing regulations, in connection with preparing or filing:

(1) A bankruptcy petition or any other document that must be filed in a bankruptcy proceeding; or

(2) Any document that must be filed in connection with a court or administrative proceeding.

**§ 322.8 Waiver not permitted.**

Any attempt by any person to obtain a waiver from any consumer of any protection provided by or any right of the consumer under this rule constitutes a violation of the rule.

**§ 322.9 Recordkeeping and compliance requirements.**

(a) Any mortgage assistance relief provider must keep, for a period of twenty-four (24) months from the date the record is produced, the following records:

(1) All contracts or other agreements between the provider and any consumer for any mortgage assistance relief service;

(2) Copies of all written communications between the provider and any consumer occurring prior to the date on which the consumer enters into a contract or other agreement with the provider for any mortgage assistance relief service;

(3) Copies of all documents or telephone recordings created in connection with compliance with paragraph (b) of this section.

(4) All consumer files containing the names, phone numbers, dollar amounts paid, quantity of items or services purchased, and descriptions of items or services purchased, to the extent such information is obtained in the ordinary course of business;

(5) Copies of all materially different sales scripts, training materials, commercial communications, or other marketing materials, including websites and weblogs; and

(6) Copies of the documentation provided to the consumer as specified in § 322.5 of this part.

(b) A mortgage assistance relief service provider must:

(1) Take reasonable steps sufficient to monitor and ensure that all employees and independent contractors comply with this rule. Such steps shall include the monitoring of sales presentations with customers, and shall also include, at a minimum, the following:

(i) Performing random, blind tape recording and testing of the oral representations made by persons engaged in sales or other customer service functions;

(ii) Establishing a procedure for receiving and responding to consumer complaints; and

(iii) Ascertaining the number and nature of consumer complaints

regarding transactions in which all employees and independent contractors are involved;

(2) Investigate promptly and fully any consumer complaint received;

(3) Take corrective action with respect to any employee or independent contractor whom the mortgage assistance relief service provider determines is not complying with this rule, which may include training, disciplining, or terminating such person; and

(4) Maintain documentation of its compliance with paragraphs (b)(1)-(3) of this section.

(c) A mortgage assistance relief provider may keep the records required by § 322.9 (a) and (b) in any form, and in the same manner, format, or place as they keep such records in the ordinary course of business. Failure to keep all records required under § 322.9 (a) and (b) shall be a violation of this Part.

**§ 322.10 Actions by states.**

Any attorney general or other officer of a state authorized by the state to bring an action under this part may do so pursuant to section 626(b) of the 2009 Omnibus Appropriations Act, Pub. L. 111-8, § 626, 123 Stat. 524 (Mar. 11, 2009), as amended by Pub. L. 111-24, § 511, 123 Stat. 1734 (May 22, 2009).

**§ 322.11 Severability.**

The provisions of this rule are separate and severable from one another. If any provision is stayed or determined to be invalid, it is the Commission's intention that the remaining provisions shall continue in effect.

By direction of the Commission.

**Donald S. Clark,**

*Secretary.*

[FR Doc. 2010–4651 Filed 3–8–10; 8:45 am]

**BILLING CODE 6750–01–S**

## DEPARTMENT OF LABOR

## Occupational Safety and Health Administration

## 29 CFR Part 1904

**[Docket No. OSHA–2009–0044]**

**RIN 1218–AC45**

## Occupational Injury and Illness Recording and Reporting Requirements

**AGENCY:** Occupational Safety and Health Administration (OSHA), Labor.

**ACTION:** Extension of comment period.

**SUMMARY:** OSHA is extending the comment period on the proposed rule on Occupational Injury and Illness Recording and Reporting Requirements to March 30, 2010. The proposal would restore a column to the OSHA 300 Log that employers would use to record work-related musculoskeletal disorders (MSDs).

**DATES:** The comment period for the proposed rule published January 29, 2010, at 75 FR 4728, is extended. Comments must be submitted (postmarked, sent or received) by March 30, 2010.

**ADDRESSES:** You may submit comments, identified by Docket No. OSHA–2009–0044, by any one of the following methods:

*Electronically:* You may submit comments and attachments electronically at *http://www.regulations.gov,* the Federal eRulemaking Portal. Follow the instructions on-line for making electronic submissions.

*Fax:* If your comments, including attachments, do not exceed 10 pages, you may fax them to the OSHA Docket Office at (202) 693–1648.

*Mail, hand delivery, express mail, messenger or courier service:* You must submit three copies of your comments and attachments to the OSHA Docket Office, Docket No. OSHA–2009–0044, U.S. Department of Labor, Room N–2625, 200 Constitution Avenue, NW., Washington, DC 20210; telephone (202) 693–2350 (OSHA's TTY number is (877) 889–5627). Deliveries (hand, express mail, messenger and courier service) are accepted during the Department of Labor's and Docket Office's normal business hours, 8:15 a.m.–4:45 p.m., e.t.

*Instructions:* All submissions must include the docket number (Docket No. OSHA–2009–0044) or RIN number (RIN 1218–AC45) for this rulemaking. Because of security-related procedures, submission by regular mail may result in significant delay. Please contact the OSHA Docket Office about security procedures for hand delivery, express delivery, messenger or courier.

All comments, including any personal information you provide, are placed in the public docket without change and may be made available on *http://www.regulations.gov.* Therefore, OSHA cautions you about submitting personal information such as social security numbers and birthdates.

*Docket:* To read or download submissions in response to the proposed rule, go to Docket No. OSHA–2009–0044 at *http://www.regulations.gov.* All submissions are listed in the *http://www.regulations.gov* index, however, some information (*e.g.,* copyrighted material) is not publicly available to read or download through that Web page. All submissions, including copyrighted material, are available for inspections and copying at the OSHA Docket Office.

Electronic copies of this **Federal Register** document are available at *http://www.regulations.gov.* This document, as well as news releases and other relevant information, also are available at OSHA's Web page at *http://www.osha.gov.*

**FOR FURTHER INFORMATION CONTACT:** *Press inquiries:* Jennifer Ashley, Director, OSHA, Office of Communications, Room N–3647, U.S. Department of Labor, 200 Constitution Avenue, NW., Washington, DC 20210; telephone (202) 693–1999.

*For general and technical information:* Jim Maddux, Acting Deputy Director, OSHA, Directorate of Standards and Guidance, Room N–3718, U.S. Department of Labor, 200 Constitution Avenue, NW., Washington, DC 20210; telephone (202) 693–1950.

**SUPPLEMENTARY INFORMATION:** On January 29, 2010, OSHA published a proposed rule to revise its regulation on Occupational Injury and Illness Recording and Reporting (Recordkeeping) (75 FR 4728). The proposal would restore a column to the OSHA 300 Log that employers would use to record work-related musculoskeletal disorders (MSDs). The proposal set a March 16, 2010 deadline for submitting written comments.

OSHA has received requests from several entities, including the Chamber of Commerce, National Association of Manufacturers, National Association of Home Builders, Associated Builders and Contractors, and IPC (Association Connecting Electronics Industries) to extend the comment period between 15 to 45 additional days. Their reasons for requesting an extension include the severe February snowstorms, which stakeholders said shut down or severely hampered access to their workplaces for more than a week, leaving them unable to access their offices or meet with their members. The requests also noted that while the proposed rule said OSHA was providing 60 days for public comment (75 FR 4739), the deadline in the **DATES** section only provided 45 days.

OSHA has decided to extend the deadline for submitting comments to March 30, 2010, which provides stakeholders an additional 15 days, as IPC requested. The extension ensures that stakeholders will have had a full 60 days to submit comments, which OSHA believes is adequate for this limited rulemaking. The extension also ensures that stakeholders attending the public

meeting on the proposed rule on March 9, 2010 have an opportunity to incorporate into their comments their views on relevant information presented at the meeting.

**Authority and Signature**

This document was prepared under the direction of David Michaels, PhD, MPH, Assistant Secretary of Labor for Occupational Safety and Health. It is issued under the authority of Sections 8 and 24 of the Occupational Safety and Health Act of 1970 (29 U.S.C. 657, 673), 5 U.S.C. 553, and Secretary of Labor's Order No. 5–2007 (72 FR 31160).

Signed at Washington, DC, this 4th of March 2010.

**David Michaels,**

*Assistant Secretary of Labor for Occupational Safety and Health.*

[FR Doc. 2010–4988 Filed 3–8–10; 8:45 am]

BILLING CODE 4510–26–P

## DEPARTMENT OF LABOR

## Occupational Safety and Health Administration

## 29 CFR Part 1910

**RIN 1218–AC41**

## Combustible Dust

**AGENCY:** Occupational Safety and Health Administration (OSHA), Labor.

**ACTION:** Notice of stakeholder meetings.

**SUMMARY:** OSHA invites interested parties to participate in informal stakeholder meetings on the workplace hazards of combustible dust. OSHA plans to use the information gathered at these meetings in developing a proposed standard for combustible dust.

**DATES:** Dates and locations for the stakeholder meetings are:

- April 21, 2010, at 9 a.m., in Chicago, IL.
- April 21, 2010, at 1:30 p.m., in Chicago, IL.

Deadline for confirmed registration at the meetings is April 7, 2010.

**ADDRESSES:**

**Registration**

Submit your notice of intent to participate in one of the stakeholder meetings by one of the following:

- *Electronic.* Register at *https://www2.ergweb.com/projects/conferences/osha/register-osha-stakeholder.htm* (follow the instructions online).
- *Facsimile.* Fax your request to: (781) 674–2906, and label it "Attention: OSHA Combustible Dust Stakeholder Meeting Registration."
- *Regular mail, express delivery, hand (courier) delivery, and messenger service.*

Send your request to: ERG, Inc., 110 Hartwell Avenue, Lexington, MA, 02421; Attention: OSHA Combustible Dust Stakeholder Meeting Registration.

**Meetings**

The April 21, 2010, meetings will be held at the Crowne Plaza Chicago O'Hare Hotel and Conference Center, 5440 North River Road, Rosemont, IL, 60018.

**FOR FURTHER INFORMATION CONTACT:** Information regarding this notice is available from the following sources:

- *Press inquiries.* Contact Jennifer Ashley, Director, OSHA Office of Communications, Room N–3647, U.S. Department of Labor, 200 Constitution Avenue, NW., Washington, DC 20210; telephone: (202) 693–1999.
- *General and technical information.* Contact Mat Chibbaro, P.E., Fire Protection Engineer, Office of Safety Systems, OSHA Directorate of Standards and Guidance, Room N–3609, U.S. Department of Labor, 200 Constitution Avenue, NW., Washington, DC 20210; telephone: (202) 693–2255.
- *Copies of this **Federal Register** notice.* Electronic copies are available at *http://www.regulations.gov.* This **Federal Register** notice, as well as news releases and other relevant information, also are available on the OSHA Web page at *http://www.osha.gov.*

**SUPPLEMENTARY INFORMATION:**

**I. Background**

The hazards of combustible dust encompass a wide array of materials, industries, and processes. Any combustible material can burn rapidly when in a finely divided form. Materials that may form combustible dust include, but are not limited to, wood, coal, plastics, biosolids, candy, sugar, spice, starch, flour, feed, grain, fertilizer, tobacco, paper, soap, rubber, drugs, dried blood, dyes, certain textiles, and metals (such as aluminum and magnesium). Industries that may have combustible dust hazards include, among others: animal food manufacturing, grain handling, food manufacturing, wood product manufacturing, chemical manufacturing, textile manufacturing, furniture manufacturing, metal processing, fabricated metal products and machinery manufacturing, pesticide manufacturing, pharmaceutical manufacturing, tire manufacturing, production of rubber and plastics, plastics and rubber products manufacturing, recycling, wastewater treatment, and coal handling.

OSHA is developing a standard that will comprehensively address the fire and explosion hazards of combustible dust. The Agency issued an Advanced Notice of Proposed Rulemaking (ANPR) that requested comments, including data and other information, on issues related to the hazards of combustible dust in the workplace. OSHA plans to use the information received in response to the ANPR and at the stakeholder meetings in developing a proposed standard for combustible dust. (74 FR 54334, Oct. 21, 2009)

**II. Stakeholder Meetings**

OSHA conducted two stakeholder meetings in Washington, DC, on December 14, 2009, and two stakeholder meetings in Atlanta, GA, on February 17, 2010. This notice announces two additional stakeholder meetings. The stakeholder meetings will be conducted as a group discussion on views, concerns, and issues surrounding the hazards of combustible dust. To facilitate as much group interaction as possible, formal presentations will not be permitted. The stakeholder meeting discussion will center on major issues such as:

- Scope.
- Organization of a prospective standard.
- The role of consensus standards.
- Economic impacts.
- Additional topics as time permits.

**III. Public Participation**

Approximately 25 participants will be accommodated in each meeting, and three hours will be allotted for each meeting. Members of the general public may observe, but not participate in, the meetings as space permits. OSHA staff will be present to take part in the discussions. Logistics for the meetings are being managed by Eastern Research Group (ERG), which will provide a facilitator and compile notes summarizing the discussion; these notes will not identify individual speakers. ERG also will make an audio recording of each session to ensure that the summary notes are accurate; these recordings will not be transcribed. The summary notes will be posted on the docket for the Combustible Dust ANPR, Docket ID: OSHA2009–0023, available at the Web site *http://www.regulations.gov.*

The meetings are as follows:

- April 21, 2010, at 9 a.m., at the Crowne Plaza Chicago O'Hare Hotel and Conference Center, 5440 North River Road, Rosemont, IL, 60018

• April 21, 2010, at 1:30 p.m., at the Crowne Plaza Chicago O'Hare Hotel and Conference Center, 5440 North River Road, Rosemont, IL, 60018

To participate in one of the April 21, 2010 stakeholder meetings, or be a nonparticipating observer, you may submit notice of intent electronically, by facsimile, or by hard copy. OSHA intends to give preference to organizations that have not participated in previous stakeholder meetings, in order to encourage as wide a range of viewpoints as possible. OSHA will confirm participants as necessary to ensure a fair representation of interests and to facilitate gathering diverse viewpoints. To receive a confirmation of your participation 1 week before the meeting, register by the date listed in the **DATES** section of this notice. However, registration will remain open until the meetings are full. Additional nonparticipating observers that do not register for the meeting will be accommodated as space permits. See the **ADDRESSES** section of this notice for the registration Web site, facsimile number, and address. To register electronically, follow the instructions provided on the Web site. To register by mail or facsimile, please indicate the following:

• Name, address, phone, fax, and e-mail.
• First and second preferences of meeting time.
• Organization for which you work.
• Organization you represent (if different).
• Stakeholder category: Government, industry, standards-developing organization, research or testing agency, union, trade association, insurance, fire protection equipment manufacturer, consultant, or other (if other, please specify).
• Industry sector (if applicable): metals, wood products, grain or wet corn milling, food (including sugar), pharmaceutical or chemical manufacturing, paper products, rubber or plastics, coal, or other (if other, please specify).

Electronic copies of this **Federal Register** notice, as well as news releases and other relevant documents, are available on the OSHA Web page at: *http://www.osha.gov.*

### Authority and Signature

This document was prepared under the direction of David Michaels, PhD MPH, Assistant Secretary of Labor for Occupational Safety and Health, U.S. Department of Labor, pursuant to sections 4, 6, and 8 of the Occupational Safety and Health Act of 1970 (29 U.S.C. 653, 655, 657), 29 CFR part 1911, and Secretary's Order 5–2007 (72 FR 31160).

Signed at Washington, DC, on March 2, 2010.

**David Michaels,**

*Assistant Secretary of Labor for Occupational Safety and Health.*

[FR Doc. 2010–4916 Filed 3–8–10; 8:45 am]

**BILLING CODE 4510–26–P**

---

## DEPARTMENT OF TRANSPORTATION

## National Highway Traffic Safety Administration

## 49 CFR Part 575

**[Docket No. NHTSA–2010–0025]**

**RIN 2127–AK51**

## New Car Assessment Program (NCAP); Safety Labeling

**AGENCY:** National Highway Traffic Safety Administration (NHTSA), Department of Transportation (DOT).

**ACTION:** Notice of proposed rulemaking (NPRM).

**SUMMARY:** Since September 2007, new passenger vehicles have been required to be labeled with safety rating information published by the National Highway Traffic Safety Administration (NHTSA) under its New Car Assessment Program (NCAP). This information is required to be part of the Monroney (automobile price sticker) label. In July 2008, NHTSA announced a decision to enhance the NCAP ratings program. In this document, the agency is proposing to upgrade its regulation on vehicle labeling of safety rating information to reflect the enhanced NCAP ratings program. NHTSA is proposing, among other things, to include a new overall vehicle score on the Monroney label.

**DATES:** Comments should be submitted early enough to ensure that they are received no later than April 8, 2010.

**ADDRESSES:** Comments should refer to the docket number above and be submitted by one of the following methods:

• *Federal Rulemaking Portal: http://www.regulations.gov.* Follow the online instructions for submitting comments. Please note, if you are submitting comments electronically as a PDF (Adobe) file, we ask that the documents submitted be scanned using an Optical Character Recognition (OCR) process, thus allowing the agency to search and copy certain portions of your submissions.
• *Fax:* 1–202–493–2251.
• *Mail:* Docket Management Facility, U.S. Department of Transportation, 1200 New Jersey Avenue, SE., West Building Ground Floor, Room W12–140, Washington, DC 20590–0001.
• *Hand Delivery:* West Building Ground Floor, Room W12–140, 1200 New Jersey Avenue, SE., Washington, DC between 9 a.m. and 5 p.m. ET, Monday through Friday, except Federal holidays.

*Instructions:* All submissions must include the agency name and docket number. For detailed instructions on submitting comments and additional information on the rulemaking process, see the Public Participation heading of the **SUPPLEMENTARY INFORMATION** section of this document. All comments received will be posted without change to *http://www.regulations.gov*, including any personal information provided.

*Privacy Act:* Anyone may search the electronic form of all comments received into any of NHTSA's dockets by the name of the individual submitting the comments (or signing the comments, if submitted on behalf of an association, business, labor union, *etc.*). You may review DOT's complete Privacy Act Statement in the **Federal Register** published on April 11, 2000 (Volume 65, Number 70; Pages 19477–78) or you may visit *http://www.regulations.gov.*

**FOR FURTHER INFORMATION CONTACT:** For non-legal issues, you may contact Ms. Jennifer N. Dang, Office of Crashworthiness Standards (Telephone: 202–493–0598). For legal issues, you may contact Ms. Dorothy Nakama, Office of the Chief Counsel (Telephone: 202–366–2992). You may send mail to both of these officials at the National Highway Traffic Safety Administration, 1200 New Jersey Avenue, SE., West Building, Washington, DC 20590–0001.

**SUPPLEMENTARY INFORMATION:**

### I. Background on the Monroney Label

Most new vehicle buyers are probably familiar with the label affixed to the side window showing the price of the vehicle and the options installed on that vehicle. This label is required by Federal law. The Automobile Information Disclosure Act (15 U.S.C. 1231–1233) was enacted into law in 1958, and is also called the "Monroney Act," after its sponsor, Senator Monroney of Oklahoma. The Monroney Act requires all new light vehicles to have a window sticker affixed that shows, among other things:

• Vehicle make.
• Vehicle model.
• Vehicle identification number.
• The final assembly point.
• The name and location of the dealer to whom the vehicle is to be delivered.
• The manufacturer's suggested retail price (MSRP) of the base vehicle.

• The MSRP of the optional equipment installed on the particular vehicle.

• The transportation charges for delivery of the vehicle from the manufacturer to the dealer, and

• The total MSRP of all of the above.

Beginning with the 1959 model year, this information was provided on the window label. Beginning in 1962, some manufacturers began providing information not just on the options installed on the vehicle, but on standard items as well.

The information required to be labeled on the window by the Monroney Act remained unchanged from its passage in 1958 until 2005. In 2005, Congress enacted SAFETEA–LU (Pub. L. 109–59), which expanded the window label requirement to include the safety ratings assigned by NHTSA under its New Car Assessment Program (NCAP), or a statement that the vehicle was not assigned safety ratings under NCAP. The 2005 law also added size and visibility requirements for the safety ratings information (15 U.S.C. 1232(g) and (h)).

In addition to the MSRP and safety ratings information, Congress has also permitted the information from two other Federal programs to appear on the Monroney label on the window of new vehicles. 49 U.S.C. 32908(b) requires that the Environmental Protection Agency (EPA) issue regulations requiring vehicle manufacturers to attach a label in a prominent place of the vehicle that provides information on:

• The vehicle's fuel economy.

• The estimated annual fuel cost of operating the vehicle.

• The range of fuel economy of comparable vehicles by all manufacturers, and

• A statement that a booklet is available from the dealer to compare the fuel economy of other vehicles manufactured by all manufacturers for the model year.

49 U.S.C. 32908(b)(2) expressly provides that the EPA "may allow a manufacturer to comply with this subsection by disclosing the information on the label required under * * * the Automobile Information Disclosure Act (15 U.S.C. 1232)."

In addition to the fuel economy information, Congress has expressly permitted one other type of required Federal information to appear on the Monroney label. 49 U.S.C. 32304 requires that passenger motor vehicle country of origin labeling be provided on new vehicles, and 49 U.S.C. 32304(g) provides that NHTSA "shall permit a manufacturer to comply with this section by allowing the manufacturer to disclose the information * * * on the label required under * * * the Automobile Information Disclosure Act (15 U.S.C. 1232)."

We are not aware of instances other than the fuel economy labeling and domestic content labeling where Congress has granted a Federal agency permission to specify that other information be provided on the Monroney label. Below is an example of a Monroney label as it appears in a new vehicle window.

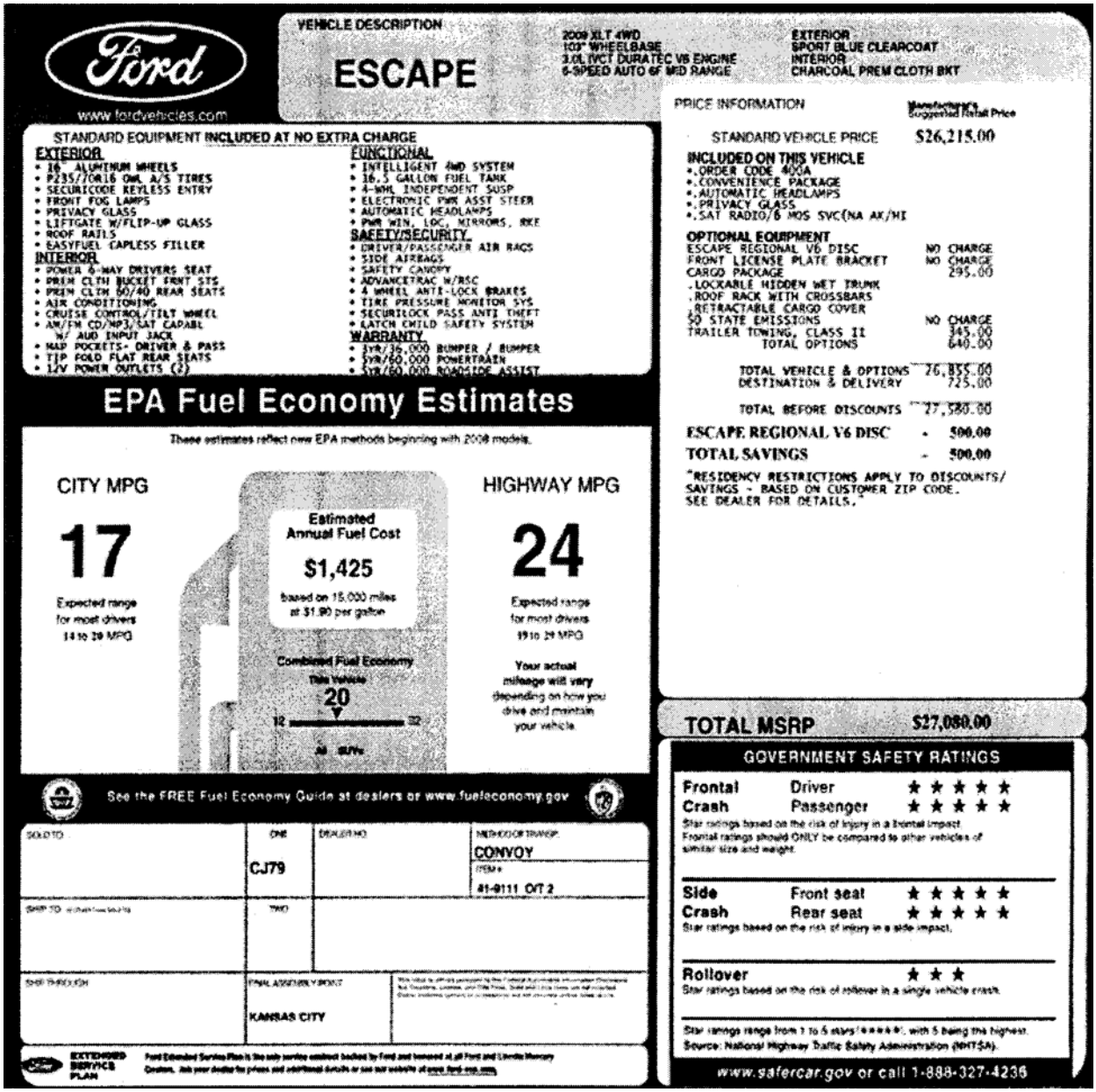


## II. Overview of This Proposal

Section 10307 of the Safe, Accountable, Flexible, Efficient Transportation Equity Act: A Legacy for Users (SAFETEA–LU), Public Law 109–59 (August 10, 2005; 119 Stat. 1144), requires new passenger vehicles to be labeled with safety ratings from the National Highway Traffic Safety Administration's (NHTSA) New Car Assessment Program (NCAP).

Pursuant to SAFETEA–LU, the agency published in the **Federal Register** (71 FR 53572) on September 12, 2006 a final rule [1] requiring manufacturers by September 1, 2007, to incorporate a distinct safety rating label into the Monroney (automobile price sticker) label required by the Automobile Information Disclosure Act (AIDA), 15 U.S.C. 1231–1233. The September 12, 2006 final rule required that the safety rating label:

- Have the title "Government Safety Ratings" along its top,
- Be either 4½ inches wide by 3½ inches high or 8 percent of the area of the Monroney label, whichever is larger, and
- Include frontal crash (driver and passenger), side crash (front seat and rear seat) and rollover safety ratings that have been generated under NCAP or display the term "Not Rated" or "To Be Rated" in any areas of the safety rating label where ratings have not been developed. (Vehicles for which no safety ratings at all have been developed may use a smaller safety rating label [4½ inches wide by 1½ inches high] indicating that the vehicle has not been rated by the government.)

The rule also required explanatory language for each of the areas of safety ratings and, near the bottom of the label, language briefly explaining the use of stars to communicate safety ratings (ratings are from 1 to 5 stars with 5 stars being the highest rating). Finally, the safety rating label must have "*http://www.safercar.gov* or 1–888–327–4236" along the bottom of the label to alert consumers as to where they may obtain further information.

On July 11, 2008, the agency published a final decision notice

[1] 49 CFR part 575, Docket No. NHTSA–2006–25772, RIN 2127–A576, "New Car Assessment Program; Safety Labeling", Final Rule.

announcing enhancements to the NCAP programs. These enhancements include:

- For the frontal crash program—modifying the frontal NCAP rating system to reflect updated test dummies, expanded injury criteria, and the inclusion of all body regions that are covered by Federal Motor Vehicle Safety Standard (FMVSS) No. 208;
- For the side crash program—modifying the side NCAP rating system to reflect new side impact test dummies, new injury criteria, the inclusion of nearly all of the body regions that are covered by FMVSS No. 214, as well as a new pole test using a small female crash test dummy;
- A new overall vehicle score that will be based on frontal crash, side crash, and rollover resistance test results; and
- A new program that will provide consumers with information concerning the availability of advanced crash avoidance technologies.

The final decision notice did not announce any changes to NCAP rollover resistance testing.

Beginning with model year 2011,[2] safety ratings for new passenger vehicles that must be in the safety rating label will be based on the updated approaches to frontal and side crash testing and ratings criteria.

Section 10307 of SAFETEA–LU specifies a number of detailed requirements for the safety rating label, including content, size, location, and applicability. The agency's September 2006 final rule was consistent with those requirements, and included a number of detailed requirements including ones related to format.

In today's document, we are proposing to revise our regulation on vehicle labeling of safety rating information to reflect the enhancements to the NCAP programs listed above. Under this proposal:

(1) Beginning with model year 2011, safety rating labels on new passenger vehicles that are manufactured on or after September 1, 2010, would be required to include, as the first item of safety information in the safety rating label, an overall vehicle score based on a vehicle's frontal crash, side crash, and rollover resistance ratings. The agency would allow early compliance for model year 2011 vehicles that are manufactured before September 1, 2010.[3]

(2) Language describing the nature and meaning of the NCAP test data used to generate vehicle safety ratings and a reference to *http://www.safercar.gov* for additional vehicle safety information in the safety rating label would be revised slightly and, in some cases, relocated in the safety rating label; and

(3) Safety concerns identified as a result of NCAP testing would need to be displayed in the overall vehicle score area of the safety rating label in addition to the appropriate area of the safety rating label to which the safety concern applies (frontal, side, or rollover).

## III. Application

### *Vehicle Weight*

In 2005, Congress modified the Automobile Information Disclosure Act (AIDA), 15 U.S.C. 1231–1233, which requires a Monroney label on all passenger vehicles, to require that passenger vehicles with a Gross Vehicle Weight Rating (GVWR) of 10,000 pounds or less, manufactured on or after September 1, 2007, include on their Monroney labels safety information developed as part of NHTSA's New Car Assessment Program (NCAP). As a result, all changes to the safety rating label proposed in this notice would apply to safety rating labels in the Monroney labels of passenger vehicles with a Gross Vehicle Weight Rating (GVWR) of 10,000 pounds or less. Vehicles that have a Monroney label and that have been rated in at least one area under NCAP would need to display those ratings as described in this notice. Vehicles that display a Monroney label and that have not been rated under NCAP would be required to include in their Monroney label the smaller vehicle safety rating label, which indicates that the vehicle has not been rated.

## IV. Proposed New Requirements for the Safety Rating Label

### *A. Content and Graphic Details*

The agency is proposing to modify the safety rating label to add a new area of the label for the overall vehicle score. This area would be located immediately below the heading area and would be the first item of safety information. Persons who are interested in the details concerning the new overall vehicle score are encouraged to read the July 2008 final decision notice announcing enhancements to the NCAP programs.

The format of the remainder of the safety rating label would be very similar to the current safety rating label, except that language explaining the five star rating system and other language indicating that NHTSA is the source of the safety information contained in the safety rating label would now be incorporated into the footer area of the label, rather than be displayed in its own area of the label, currently referred to as the general information area. Some minor modifications in other language would also occur.

The result would be that the modified safety rating label would consist of six sections, the same number of sections in the current safety rating label. The modified safety rating label would be subdivided into—the heading area, a new overall vehicle score area, the frontal crash area, the side crash area, the rollover area, and the footer area. The position of these areas, running from the top to the bottom of the label, would be as follows: heading area at the top, followed by the overall vehicle score area, the frontal area, the side area, the rollover area, and the footer area.

As is currently the case, the areas of the label whose background is light in color—overall vehicle score, frontal, side, and rollover—would continue to be required to be separated from each other by a dark line that is a minimum of 3 points in width. Also as is currently required, the entire safety rating label would be required to be surrounded by a solid dark line that is a minimum of 3 points in width. The format of each area of the safety rating label is described below.

#### Heading Area

The agency is proposing to change the language in the heading area to read "Government 5-Star Safety Ratings" rather than the existing heading "Government Safety Ratings", as a result of consumer research conducted by NHTSA.[4] When asked which heading is most appropriate for the Federal Government motor vehicle safety rating system (which is based on a 5-Star rating system), approximately two-thirds of the interviewees preferred "Government 5-Star Safety Ratings". Approximately two-thirds of the participants in the survey were aware that the Government posts safety ratings on a new vehicle's window sticker (the Monroney label), and the majority preferred the "Government 5-Star Safety Ratings" heading. Since it is critical that the heading area be easily recognizable

[2] On December 24, 2008, the agency published a notice announcing a postponement (for one model year) in the implementation of the new enhancements to the NCAP crash testing and safety rating program in Docket No. NHTSA–2006–26555. The agency will begin applying the enhanced NCAP testing and safety rating criteria to model year 2011 vehicles.

[3] In other words, manufacturers would have the option to place the proposed safety rating labels on model year 2011 vehicles that are manufactured before September 1, 2010.

[4] The full study report is available at *http://www.regulations.gov* in Docket No. NHTSA–2006–25772.

to help consumers identify the NHTSA safety information on the Monroney label, the agency is proposing to require the words "Government 5-Star Safety Ratings" in centered boldface, light capital letters against a dark background.

Overall Vehicle Score Area

In NHTSA's July 11, 2008 final decision notice (which discusses how the agency plans to enhance its existing NCAP programs), the overall vehicle score is referred to as the Vehicle Safety Score. NHTSA's research found that most participants preferred the term "Overall Vehicle Score" as compared to "Vehicle Safety Score" to convey the overall safety rating of a vehicle.[5] Therefore, the agency is proposing that "Overall Vehicle Score" be used to describe the section of the safety rating label in which stars reflecting the overall vehicle score will be displayed.

NHTSA is also proposing to require the statement "Based on the combined ratings of frontal, side and rollover." at the bottom of this area of the safety rating label to explain to consumers how the overall vehicle score is determined. The words "Star rating," which are currently included in similar statements in other areas of the safety rating label, would be excluded from this statement. The agency believes consumers will readily understand that a star rating is involved because of the obvious use of stars in the safety rating label. (In other sections of this document, the agency is proposing to drop the use of the words "Star rating" from the other areas of the safety rating label where they are currently used.)

Finally, the agency is proposing that the words, "Should ONLY be compared to other vehicles of similar weight class." appear at the bottom of the overall vehicle score area of the safety rating label as well. The current safety rating label is required to include the statement, "Frontal ratings should ONLY be compared to other vehicles of similar weight class." at the bottom of the Frontal Crash area of the safety rating label. (As explained elsewhere in this notice, the agency is proposing to eliminate the words "Frontal ratings" so that the statement required in the Frontal Crash area would be identical to the one proposed above for the overall vehicle score area.) Since the overall vehicle score is based in part on the frontal crash rating, the agency believes it is appropriate to propose the same language for both the Frontal Crash area and the Overall Vehicle Score area.

Frontal Area

In the current NCAP frontal crash test program, NHTSA provides consumers with frontal crash ratings for two seating positions, the driver and the right front passenger. The current rating for each seating position is based on the combined chance of serious injury to the head and chest. As mentioned previously, the new frontal program will include all of the FMVSS No. 208 body regions (head, neck, chest, and femur). The new program will also use a different crash test dummy in the right front passenger seating position. The seating positions will remain the same. Hence, the new frontal crash rating for each seating position will be based on the combined chance of serious injury to the head, neck, chest, and femur.

Nearly three-fourths of the participants in NHTSA's consumer research preferred a rating for each frontal seating position over an overall frontal rating.[6] NHTSA understands consumers' preference for having crash rating information by seating position readily available at the point of sale. Thus, the agency proposes to continue reporting frontal crash ratings on the Monroney label by seating position on the revised safety rating label. It is proposed that the term "Frontal Crash" continue to be used to refer to frontal crash test ratings and "Driver" and "Passenger" still be used to refer to the seating positions and the applicable star rating.

Currently the statement, "Star ratings based on the risk of injury in a frontal impact." is required at the bottom of the Frontal Crash area of the safety rating label. NHTSA is proposing that this statement be shortened to "Based on the risk of injury in a frontal impact." As explained previously, the term "Star ratings," would be excluded from this statement because the term "Government 5-Star Safety Ratings" would appear in the heading area of the modified safety rating label and should make clear to consumers that the stars in any area of the safety rating label reflect safety ratings. This generic statement would continue to provide the agency with the flexibility to update the ratings (due to additional injury criteria, an update to FMVSS No. 208, etc.) without conducting further rulemaking to update the label.

As explained above under Overall Vehicle Score Area, the statement, "Frontal ratings should ONLY be compared to other vehicles of similar weight class." is currently required at the bottom of the Frontal Crash area of the safety rating label. NHTSA is proposing that this statement be shortened to "Should ONLY be compared to other vehicles of similar weight class." This shortened statement would be required, as the longer statement is currently required, at the bottom of the frontal crash area of the safety rating label. The words "Frontal ratings" would be deleted because we believe consumers would realize that the statement refers to Frontal ratings since the statement would appear in the Frontal Crash area of the safety rating label.

Side Area

In the current side NCAP program, NHTSA conducts side impact tests that provide consumers with side ratings for the first and second seating rows of a vehicle, specifically for the driver seating position and the rear outboard seating passenger position. In the current program, a moving deformable barrier (MDB) test is used to assess side impact protection. Currently, side impact ratings for each seating position are based on chest injury only.

Changes to the side NCAP program include (1) new test dummies for the two seating positions in the MDB test, (2) a new oblique pole test with a small female crash test dummy in the driver position, and (3) additional injury criteria for both the MDB and the new oblique pole tests. As previously mentioned, the enhanced side NCAP program will include nearly all of the FMVSS No. 214 body regions (except for the lower spine acceleration for the small female crash test dummy) for the calculation of the side NCAP rating. In other words, the new side program will include, for the MDB test, head, chest, abdomen, and pelvic injury criteria in the driver seating position and head and pelvic injury criteria in the rear passenger seating position. The new oblique pole test will include head and pelvic injury criteria in the driver seating position. In summary, ratings for the new side program will be based on (1) for the driver seating position, a combined chance of serious injury to the head, chest, abdomen, and pelvis in an MDB test as well as a combined chance of injury to the head and pelvis in a side oblique pole or narrow object test, and (2) for the rear passenger seating position, a combined chance of serious injury to the head and pelvis in an MDB test.

As discussed previously, an overwhelming proportion of

[5] The full study report is available at *http://www.regulation.gov* in Docket No. NHTSA–2006–25772.

[6] The full study report is available at *http://www.regulations.gov* in Docket No. NHTSA–2006–25772.

interviewees in a NHTSA consumer survey preferred that NHTSA provide crash test ratings by seating position on the revised safety rating label. Therefore, as with frontal crash ratings, it is proposed that side crash ratings continue to be presented by seating position.

"Side Crash" would still be used to describe the side crash test ratings, and "Front Seat" and "Rear Seat" would still be used to describe the seating positions and applicable star ratings for those seating positions. Furthermore, as in the Frontal Crash area, NHTSA is also proposing to shorten the statement required at the bottom of the Side Crash area to "Based on the risk of injury in side impact tests." The words "Star ratings" currently required at the beginning of this statement would be excluded for the same reason these words would be excluded from a similar statement in the Frontal Crash area. Also, this generic statement would allow the agency the flexibility to update the ratings (*i.e.,* due to additional injury criteria, an update to FMVSS No. 214, etc.) on the label without conducting further rulemaking.

Rollover Area

As discussed in the July 11, 2008 final decision notice, the agency decided to not change its current rollover test program, which uses a vehicle's Static Stability Factor (SSF) and the results of a dynamic rollover "fishhook" test, to determine the chance that a vehicle will roll over in a single-vehicle crash and the rollover resistance rating that results. It is proposed the term "Rollover" for the area of the safety rating label for the rollover rating remain the same in the revised safety rating label since the program is unchanged. However, NHTSA is proposing to shorten the statement required at the bottom of the rollover area to "Based on the risk of rollover in a single vehicle crash." As with the Frontal Crash and Side Crash areas of the safety rating label, we are proposing to exclude the words "Star rating" from this statement for the same reason given for excluding these words from those two areas of the label.

Footer Area

The agency has required the phrase "Star ratings range from 1 to 5 stars (★★★★★) with 5 being the highest." in the current *general information area* of the safety rating label.[7] This statement is used not only to remind consumers that the maximum rating is 5 stars but also to fulfill the Congressional requirement that the graphic depiction of the vehicle rating be displayed in a clearly differentiated fashion while also indicating the maximum possible rating. Additionally, the text "Source: National Highway Traffic Safety Administration (NHTSA)" is required to appear as the last line in the general information area of the existing safety rating label. This statement is used to inform consumers that the ratings are from a government agency.

Also on the existing safety rating label, the text "www.safercar.gov or 1–888–327–4236" is required to be placed in the footer area. This information is provided not only to help consumers identify the agency's Web site, where additional NHTSA safety information can be found, but also to fulfill the mandate from Congress that the safety rating label contain a reference to *http://www.safercar.gov* and additional vehicle safety resources.

Due to the proposed addition of an overall vehicle score area in the modified safety rating label, the agency believes that for the label to be presented in a legible, visible, and prominent fashion that covers at least 8 percent of the total area of the Monroney label or an area with a minimum of 4½ inches in length and 3½ inches in height on the Monroney label, only the required rating information should be provided in designated relevant areas (i.e., overall vehicle score area, frontal crash area, side crash area, and rollover area). In other words, the agency is proposing that the texts "Star ratings range from 1 to 5 stars (★★★★★) with 5 being the highest." and "Source: National Highway Traffic Safety Administration (NHTSA)"[8] be shown in the footer area (instead of in the current general information area) along with the agency's Web site information.[9]

More than half of the respondents who participated in NHTSA's consumer survey preferred that the agency's Web address, hotline number, and source information be included in the footer area.[10] Under this proposal, the general information area where this information is currently displayed would be eliminated as a separate area of the safety rating label.

Safety Concerns

For vehicle tests for which NHTSA reports a safety concern as part of the star rating, the regulation currently requires a symbol consisting of an exclamation point inside a triangle (safety concern symbol) to be depicted as a superscript to the star rating, and the same symbol to be depicted at the bottom of the relevant area along with the words "Safety Concern: Visit *http://www.safercar.gov* or call 1–888–327–4236 for more details." Examples of such safety concerns are high likelihoods of thigh injury, pelvic injury, or head injury; fuel leakage; and door openings.

NHTSA believes the inclusion of all of the FMVSS No. 208 body regions in the calculation of the frontal NCAP rating and nearly all of the FMVSS No. 214 body regions (except for the lower spine acceleration for the small female crash test dummy) in the calculation of the side NCAP rating will lead to more robust ratings and significantly reduce the need to use the safety concern symbol to highlight injury related occurrences during testing. For those injury related safety concerns and safety concerns relating to the physical structure of a vehicle (i.e., fuel leakage, door openings, etc.) that continue to arise, the agency would continue to require depiction of the symbol and related statement in the appropriate area of the safety rating label.

We are proposing to also require, whenever a safety concern arises in any rating category, that the safety concern symbol and related statement be included in the overall vehicle score area of the safety rating label as well. We believe that to not require the symbol in this location as well as in the location containing the rating for the testing in which the safety concern arose could diminish the effect of having the symbol in the applicable rating category by suggesting that the safety concern was not sufficient to have an impact on the overall safety of the vehicle. The agency's view is that any safety concern that arises during NCAP testing is a necessary part of the overall picture of a vehicle's relative safety, even though the concern does not have an impact on the rating derived from the specific testing in which the concern arose. Since the overall vehicle score is based on the combined ratings of the frontal crash, side crash, and rollover tests, the agency believes that a safety concern relating to one of these NCAP

[7] The current regulatory text has a comma between the "parenthesis" and the word "with" whereas the text in the sample label does not. The agency is proposing to revise the text as stated in this notice to reflect the text shown in the sample label.

[8] The current regulatory text does not include a period at the end of the Source text whereas the text in the sample labels does. The agency is proposing to revise the text shown in the sample labels to reflect the text stated in the regulation.

[9] The Web site information "*http://www.safercar.gov*" will not be shown italicized to reflect the sample label.

[10] The full study report is available at *http://www.regulations.gov* in Docket No. NHTSA–2006–25772.

tests should be noted in the area where the overall vehicle score is displayed.

NHTSA continues to believe that the types of events that trigger a safety concern and the use of the safety concern symbol are significant and should be communicated to consumers. Agency consumer research indicates that consumers welcome having this information so that they may use it in making vehicle purchasing decisions. Depiction of the safety symbol to flag safety concerns is therefore consistent with the overall goal of NCAP, which is to create market forces to drive manufacturers to continually enhance the safety of the vehicles they produce. Furthermore, the agency believes it would be inconsistent and misleading to consumers to have a safety concern for a vehicle noted on the agency Web site, *http://www.safercar.gov,* and not on the vehicle safety label in the Monroney label.

The agency is seeking comments and plans to conduct consumer research into the extent to which consumers understand this approach, or other approaches, to communicating safety concerns. Since consumers may rely on some or all of the sections of the Monroney label to make purchasing decisions, we seek comment on whether NHTSA's planned follow-up consumer testing for the safety section of the label should include all four items that might appear on the Monroney label (price, safety, fuel economy, and domestic content) to help the agency better understand any potential tradeoffs consumers may make among those items and whether the amount of space dedicated to each of the four items affects the attention consumers give the items. NHTSA also solicits public comments on the benefits the public would receive from a coordinated approach to any revisions of the Monroney label among the three agencies with authority over the different sections (the Department of Justice for price information, the Environmental Protection Agency for fuel economy, and NHTSA for safety and domestic content), and whether those benefits would outweigh any delays that might occur to achieve comprehensive and coordinated revisions to parts of the Monroney label.

The agency is currently developing communications materials to educate consumers about the safety ratings label, including detailed explanations of the individual safety ratings and how those ratings indicate the percent chance of serious injury to the occupant(s) traveling in a vehicle that is involved in a crash. However, the agency is seeking comments on key components of effective approaches of communicating the safety ratings to consumers. NHTSA is particularly interested in data to substantiate the effectiveness of recommended approaches. The agency is also seeking comments on the current consumer understanding of the NCAP star safety ratings and the difference between those ratings, which range from 1 to 5 stars, and whether other presentation formats could more effectively communicate that information to consumers. As above, NHTSA is especially interested in reviewing the data to support commenters' suggested alternative approaches.

*B. Crash Avoidance Technologies*

Enhancements to the existing NCAP testing programs also include the establishment of a crash avoidance technology information program under which the agency will indicate on the *http://www.safercar.gov* Web site those vehicles equipped with certain technologies either available or as standard equipment. To be so noted, the crash avoidance technology of the vehicle will need to meet NHTSA performance requirements for the technology involved.

The agency selected three technologies that are mature enough to include in a crash avoidance ratings program at this time. The three technologies are electronic stability control (ESC), forward collision warning (FCW), and lane departure warning (LDW). The agency plans to use text and simple graphics on *http://www.safercar.gov* to communicate (1) the fact that ESC, LDW, and/or FCW is available as optional or standard equipment on vehicles and (2) that the equipment involved meets the appropriate agency performance requirements.

The agency has decided at this time to not include advanced technology information in the safety rating label for the following reasons:

- Including advanced crash avoidance technologies in the safety rating label of the Monroney label would require that the agency conduct a rulemaking to update the safety rating label each time that the list of crash avoidance technologies changed.
- Available Monroney label space is limited. If information on crash avoidance technologies were included in the new safety rating label, the information on the safety rating label as a whole might not be legible.

The agency is seeking comments from the public on the approach the agency is taking to communicate the availability of these advanced technologies and on how these and other technologies that may arise should be communicated in the future.

*C. Notification*

Current Process

In May/June of each year, NHTSA collects information from vehicle manufacturers to help the agency identify new vehicle models, redesigned vehicles, and models whose design will carry-over from the previous model year.[11] Once the agency analyzes the information provided, the carry-over models, new and redesigned models not being tested, and new and redesigned models to be tested are posted on the agency's Web site, *http://www.safercar.gov.*[12]

At about the same time, the agency sends a letter to officially inform each vehicle manufacturer which models the agency has determined to be carry-over vehicles and their respective NCAP star rating(s). NHTSA provides these letters to manufacturers as soon as a determination is made regarding the status of the vehicles (carryover or non-carryover) to ensure that manufacturers have the opportunity to place NCAP star ratings on the Monroney labels of these models as soon as they begin the new year of production.

The agency also sends a separate letter to each vehicle manufacturer indicating which models have been selected for NCAP testing. Once a selected vehicle has been tested and NHTSA completes the process of thoroughly reviewing the data generated during NCAP testing, the agency sends a letter informing the manufacturer of the rating(s) of the tested vehicle. The letter also informs the manufacturer which vehicle trim lines and corporate twins will be rated based on the results from the tested vehicle.

Vehicles for which ratings have not been provided in one or more of the ratings areas must have "Not Rated" in those areas of the safety rating label. Vehicles that have not been tested in any of the ratings areas and therefore do not have ratings in any ratings area may use a smaller safety rating label described in 49 CFR 575.301. Vehicles that are slated to be tested by NHTSA, but have not yet been tested may have "To Be Rated" in the various ratings areas of the safety rating label for which testing is slated.

[11] Carry-over models are vehicles that have been tested under the NCAP in previous years, and whose design has not changed, therefore retaining the previous safety rating.

[12] Through carry-over and new testing, NCAP provides ratings for approximately 85 percent of the vehicle fleet each year.

Model Year 2011 Process

Due to the enhancements to the NCAP frontal and side crash test programs, no frontal and side safety ratings of the current NCAP crash test programs will carry-over to model year 2011 vehicles. To help address this, the agency plans to modify its current notification process for 2011 model year vehicles. NHTSA began collecting basic model year 2011 vehicle information from vehicle manufacturers in September 2009. Based on information provided by the manufacturers, the agency will devise a preliminary model year 2011 testing schedule. NHTSA also plans to contact vehicle manufacturers again in March 2010 and in June 2010 to help the agency to continue to identify and verify vehicles to be tested with the upgraded frontal and side crash tests and to ensure that initial projections of vehicle availability provided by manufacturers still align with the agency's testing schedule.

Once NHTSA has determined that a 2011 model year vehicle will be tested, which could occur as early as after the initial contact with manufacturers or as late as the last contact with manufacturers, the agency will send a letter to officially inform each vehicle manufacturer which 2011 model year vehicles the agency has selected for the updated tests. Additional letters may be required to notify vehicle manufacturers of vehicles selected for NCAP testing later in the vehicle selection process. Once vehicles have been tested and the data generated during the NCAP tests has been thoroughly reviewed, the agency will send letters to manufacturers of the tested vehicles informing them of the ratings achieved by those vehicles. As with the current process, the letter will also inform manufacturers which trim lines and corporate twins will get the same ratings as the vehicle actually tested. Additionally, the ratings will be announced in a press release and posted on the agency's Web site *http://www.safercar.gov*.

The rollover NCAP program has not changed. Therefore, rollover resistance ratings for some model year 2010 vehicles will carryover to model year 2011 vehicles. Carryover rollover resistance ratings for vehicles slated to be crash tested under the revised NCAP will be posted on *http://www.safercar.gov* as soon as they are confirmed as carryover ratings. This will allow consumers to continue to have access to this information while the revised NCAP crash testing and rating program is being rolled out. Official notification of carryover rollover resistance ratings for these vehicles, as well as notification of the rollover resistance ratings for non-carryover vehicles that are selected for rollover testing, will occur at the same time manufacturers are notified of crash ratings under the revised NCAP crash program.

Once the first year of testing using the revised frontal and side crash tests is completed, the agency will resume the notification process that the agency has followed prior to the implementation of the enhanced crash test programs. Specifically, the vehicle information collection process will again begin in May/June of each year. The agency will continue to send letters to each vehicle manufacturer indicating which models have been selected for the NCAP crash test and other programs. The agency will send a separate letter to officially inform each manufacturer which models the agency has determined to be carry-over vehicles and the safety ratings that apply to those vehicles. Letters informing manufacturers of the ratings assigned to vehicles tested will be sent when testing and quality control of test data has been completed.

Since the frontal and side safety ratings of the current NCAP crash test programs will not be carried-over to model year 2011 vehicles and beyond, manufacturers will be required to either post "Not Rated" on the Monroney label for the frontal and side crash categories until the agency informs the manufacturer of the rating(s) that apply or post "To Be Rated" if the vehicle involved is slated to be tested. If NHTSA has not released a safety rating for any category for a vehicle and will not be performing any NCAP tests on the vehicle, the manufacturer may use a smaller safety rating label as illustrated in Figure 2.

*D. Timing*

As in the current labeling program, the agency will require vehicle manufacturers to place the new Government 5-Star safety ratings on the safety rating label of the Monroney label of new vehicles manufactured 30 days after receiving from NHTSA notification of the test results. The agency does not and will not require manufacturers to reprint Monroney labels for vehicles that were produced prior to the agency's notification.[13] However, manufacturers are allowed to voluntarily re-label vehicles, should they choose, by replacing the entire Monroney label (not just the safety rating label with the NCAP information).

*E. Consumer Education*

As discussed previously, new model year 2011 and later vehicles will be subjected to the enhanced NCAP program. NHTSA realizes that consumers could misinterpret or be confused by differences between ratings for model year 2010 and 2011 vehicles. Even when model year 2010 and 2011 vehicles achieve the same rating, consumers may not fully understand what this means. To address this, the agency plans to develop an educational toolkit and work with various partners to educate consumers about its new Government 5-Star Safety Ratings program.

*F. Compliance Date*

Under our proposal, beginning with model year 2011, passenger vehicles that are manufactured on or after September 1, 2010, would be required to have the new safety rating labels. The agency would allow early compliance for model year 2011 vehicles that are manufactured before September 1, 2010, provided the ratings placed on the safety rating label were derived from vehicle testing conducted by the National Highway Traffic Safety Administration that is appropriate for model year 2011 or later vehicles.

Some model year 2010 vehicles may continue to be manufactured after September 1, 2010. The requirements of the existing regulation would apply to these vehicles.

Under our proposal, the new regulation that would apply to model year 2011 and later vehicles manufactured on or after September 1, 2010 would be designated as § 575.302. The existing regulation, with minor conforming amendments, would continue to be at § 575.301.

## V. Rulemaking Analyses and Notices

*A. Executive Order 12866 and DOT Regulatory Policies and Procedures*

NHTSA has considered the impact of this proposed rule under Executive Order 12866 and the Department of Transportation's regulatory policies and procedures. This proposed rulemaking document was not reviewed under E.O. 12866, "Regulatory Planning and Review." This action has been determined to be "non-significant" under the Department of Transportation's regulatory policies and procedures. The agency concludes that if this rule were made final, the impacts of the amendments would be so minimal that preparation of a full

[13] The vehicle manufacturing date will be used to determine which vehicles will be required to have the new NCAP star rating(s).

regulatory evaluation would not be required.

This NPRM proposes to require vehicle manufacturers to add to the existing safety rating label the new overall vehicle score rating the agency has added to the NCAP program, and to make minor modifications to the safety rating label. The agency has considered and concluded that the one-time redesign cost and the cost of redesign to replace "Not Rated" or "To Be Rated" with stars each time a vehicle is rated, all to be minor. The cost of the existing label is estimated to be less than $0.15 per vehicle, and, under our proposal, the label would remain the same size. Given these considerations, any effects on costs would be trivial.

*B. Regulatory Flexibility Act*

Pursuant to the Regulatory Flexibility Act (5 U.S.C. 601 *et seq.,* as amended by the Small Business Regulatory Enforcement Fairness Act (SBREFA) of 1996), whenever an agency is required to publish a notice of rulemaking for any proposed or final rule, it must prepare and make available for public comment a regulatory flexibility analysis that describes the effect of the rule on small entities (*i.e.,* small businesses, small organizations, and small governmental jurisdictions). The Small Business Administration's regulations at 13 CFR part 121 define a small business, in part, as a business entity "which operates primarily within the United States." (13 CFR 121.105(a)). No regulatory flexibility analysis is required if the head of an agency certifies the rule will not have a significant economic impact on a substantial number of small entities. SBREFA amended the Regulatory Flexibility Act to require Federal agencies to provide a statement of the factual basis for certifying that a rule will not have a significant economic impact on a substantial number of small entities.

NHTSA has considered the effects of this proposed rule under the Regulatory Flexibility Act. There are four small motor vehicle manufacturers in the United States building vehicles that would be affected by this rule. I certify that this proposed rule would not have a significant economic impact on a substantial number of small entities. The rationale for this certification is that the agency does not believe that this proposal adds a significant economic cost to a motor vehicle. The cost of the existing label is estimated to be less than $0.15 per vehicle. The requirements proposed by today's document would result in minor costs, as it would merely require redesign of that label.

*C. Paperwork Reduction Act*

Under the Paperwork Reduction Act of 1995 (44 U.S.C. 3501 *et seq.*) (PRA), a person is not required to respond to a collection of information by a Federal agency unless the collection displays a valid Office of Management and Budget (OMB) control number. For the following reasons, NHTSA concludes that if made final, this rulemaking would not impose any new collection of information requirements for which a 5 CFR part 1320 clearance must be obtained. As described previously, this rule, if made final, would require vehicle manufacturers to include on the existing safety rating labels, the overall vehicle score rating information by NCAP. This NPRM proposes how NHTSA will describe the appearance of the label, and specify to the vehicle manufacturers, in both individual letters to the manufacturers and on the NHTSA's 5-Star safety ratings Web site (*http://www.safercar.gov*), the information specific to a particular motor vehicle make and model that the vehicle manufacturer must place on the Monroney label.

Because, if this rule is made final, NHTSA will specify the format of the safety rating label, and the information each vehicle manufacturer must include on the label, this "collection of information" falls within the exception described in 5 CFR 1320.3(c)(2) which states in part: "The public disclosure of information originally supplied by the Federal government to the recipient for the purpose of disclosure to the public is not included within this definition."

The Government 5-Star safety ratings are created by NHTSA. This rule, if made final, would require vehicle manufacturers to take the Government 5-Star safety ratings (which NHTSA will provide to each manufacturer) and report them on the Monroney labels, thus disclosing them to potential customers (*i.e.,* the public). For this reason, this proposed rule, if made final, would impose a "collection of information" requirement for which 5 CFR part 1320 approval need not be obtained.

*D. National Environmental Policy Act*

NHTSA has analyzed this proposed rule for the purposes of the National Environmental Policy Act and has determined that if made final, the rule will not have any significant impact on the quality of the human environment.

*E. Executive Order 13132 (Federalism)*

The agency has analyzed this proposed rule in accordance with the principles and criteria contained in Executive Order 13132 and has determined that it does not have sufficient federalism implications to warrant consultation with State and local officials or the preparation of a federalism summary impact statement. If made final, this rule will have no substantial effects on the States, on the current Federal-State relationship, or on the current distribution of power and responsibilities among the various local officials.

*F. Civil Justice Reform*

This proposed rule would not have any retroactive effect. Parties are not required to exhaust administrative remedies before filing suit in court.

*G. National Technology Transfer and Advancement Act*

Section 12(d) of the National Technology Transfer and Advancement Act of 1995 (NTTAA), Public Law 104–113, section 12(d) (15 U.S.C. 272) directs NHTSA to use voluntary consensus standards in regulatory activities unless doing so would be inconsistent with applicable law or would otherwise be impractical. Voluntary consensus standards are technical standards (*e.g.,* materials specifications, test methods, sampling procedures, and business practices) that are developed or adopted by voluntary consensus standards bodies, such as the Society of Automotive Engineers (SAE). The agency searched for, but did not find any voluntary consensus standards relevant to this proposed rule.

*H. Unfunded Mandates Reform Act*

This proposed rule will not impose any unfunded mandates under the Unfunded Mandates Reform Act (UMRA) of 1995. This rule will not result in costs of $100 million or more to either State, local, or tribal governments, in the aggregate, or to the private sector. Thus, this rule is not subject to the requirements of sections 202 and 205 of the UMRA.

*I. Plain Language*

Executive Order 12866 requires each agency to write all rules in plain language. Application of the principles of plain language includes consideration of the following questions:

- Have we organized the material to suit the public's needs?
- Are the requirements in the rule clearly stated?
- Does the rule contain technical language or jargon that is not clear?

• Would a different format (grouping and order of sections, use of headings, paragraphing) make the rule easier to understand?

• Would more (but shorter) sections be better?

• Could we improve clarity by adding tables, lists, or diagrams?

• What else could we do to make this rulemaking easier to understand?

If you have any responses to these questions, please include them in your comments on this NPRM.

*J. Privacy Act Statement*

Anyone is able to search the electronic form of all comments or petitions received into any of our dockets by the name of the individual submitting the comment (or signing the comment, if submitted on behalf of an association, business, labor union, *etc.*). You may review DOT's complete Privacy Act Statement in the **Federal Register** published on April 11, 2000 (Volume 65, Number 70; Pages 19477–78) or you may visit *http://www.regulations.gov.*

## VI. Public Participation

We invite comments on today's proposal. We are providing a 30-day comment period. We are not providing a longer period because there is a need to complete rulemaking in time to allow manufacturers to make any necessary changes in the labels for MY 2011 vehicles manufactured on or after September 1, 2010. Moreover, we believe 30 days is sufficient, given that the rulemaking addresses changes in an existing label to reflect already announced changes in the NCAP Program.

*How Do I Prepare and Submit Comments?*

Your comments must be written and in English. To ensure that your comments are correctly filed in the Docket, please include the docket number of this document in your comments.

Your comments must not be more than 15 pages long.[14] We established this limit to encourage you to write your primary comments in a concise fashion. However, you may attach necessary additional documents to your comments. There is no limit on the length of the attachments.

Please submit your comments by any of the following methods:

• *Federal eRulemaking Portal:* go to *http://www.regulations.gov.* Follow the online instructions for submitting comments.

• *Mail:* Docket Management Facility, M–30, U.S. Department of Transportation, West Building, Ground Floor, Rm. W12–140, 1200 New Jersey Avenue, SE., Washington, DC 20590.

• *Hand Delivery or Courier:* West Building Ground Floor, Room W12–140, 1200 New Jersey Avenue, SE., between 9 a.m. and 5 p.m. Eastern Time, Monday through Friday, except Federal holidays.

• *Fax:* (202) 493–2251.

If you are submitting comments electronically as a PDF (Adobe) file, we ask that the documents submitted be scanned using Optical Character Recognition (OCR) process, thus allowing the agency to search and copy certain portions of your submissions.[15]

*How Can I Be Sure That My Comments Were Received?*

If you submit your comments by mail and wish Docket Management to notify you upon its receipt of your comments, enclose a self-addressed, stamped postcard in the envelope containing your comments. Upon receiving your comments, Docket Management will return the postcard by mail.

*How Do I Submit Confidential Business Information?*

If you wish to submit any information under a claim of confidentiality, you should submit three copies of your complete submission, including the information you claim to be confidential business information, to the Chief Counsel, NHTSA, at the address given above under **FOR FURTHER INFORMATION CONTACT.** When you send a comment containing information claimed to be confidential business information, you should include a cover letter setting forth the information specified in our confidential business information regulation.[16]

In addition, you should submit a copy, from which you have deleted the claimed confidential business information, to the Docket by one of the methods set forth above.

*Will the Agency Consider Late Comments?*

We will consider all comments received before the close of business on the comment closing date indicated above under **DATES.** To the extent possible, we will also consider comments received after that date. If a comment is received too late for us to consider in developing a final rule (assuming that one is issued), we will consider that comment as an informal suggestion for future rulemaking action.

*How Can I Read the Comments Submitted by Other People?*

You may read the materials placed in the docket for this document (*e.g.,* the comments submitted in response to this document by other interested persons) at any time by going to *http://www.regulations.gov.* Follow the online instructions for accessing the dockets. You may also read the materials at the Docket Management Facility by going to the street address given above under **ADDRESSES.** The Docket Management Facility is open between 9 a.m. and 5 p.m. Eastern Time, Monday through Friday, except Federal holidays.

Please note that even after the comment closing date, we will continue to file relevant information in the Docket as it becomes available. Furthermore, some people may submit late comments. Thus, we recommend that you periodically check the Docket for new material.

**List of Subjects in 49 CFR Part 575**

Consumer protection, Motor vehicle safety, Reporting and recordkeeping requirements.

In consideration of the foregoing, NHTSA proposes to amend 49 CFR part 575 as set forth below:

## PART 575—CONSUMER INFORMATION

1. The authority citation for part 575 continues to read as follows:

**Authority:** 49 U.S.C. 32302, 30111, 30115, 30117, 30166 and 30168, Pub. L. 104–414, 114 Stat. 1800, Pub. L. 109–59, Stat. 1144, 15 U.S.C. 1232(g); delegation of authority at 49 CFR 1.50.

2. Section 575.301 is amended by revising the section heading and paragraph (b) to read as follows:

**§ 575.301 Vehicle labeling of safety rating information (applicable unless a vehicle is subject to § 575.302).**

* * * * *

(b) *Application.* This section applies to automobiles with a GVWR of 10,000 pounds or less, manufactured on or after September 1, 2007, that are required by the Automobile Information Disclosure Act, 15 U.S.C. 1231–1233, to have price sticker labels (Monroney labels), e.g. passenger vehicles, station wagons, passenger vans, and sport utility vehicles, except for vehicles that are subject to § 575.302. Model Year 2011 or later vehicles manufactured prior to September 1, 2010 may, at the manufacturer's option, be labeled according to the provisions of § 575.302

[14] *See* 49 CFR 553.21.

[15] Optical character recognition (OCR) is the process of converting an image of text, such as a scanned paper document or electronic fax file, into computer-editable text.

[16] *See* 49 CFR 512.

instead of this section provided the ratings placed on the safety rating label are derived from vehicle testing conducted by the National Highway Traffic Safety Administration that is appropriate for Model Year 2011 or later vehicles.

* * * * *

3. Section 575.302 is added to read as follows:

**§ 575.302 Vehicle labeling of safety rating information (compliance required for model year 2011 and later vehicles manufactured on or after September 1, 2010).**

(a) *Purpose and Scope.* The purpose of this section is to aid potential purchasers in the selection of new passenger motor vehicles by providing them with safety rating information developed by NHTSA in its New Car Assessment Program (NCAP) testing. Manufacturers of passenger motor vehicles described in paragraph (b) of this section are required to include this information on the Monroney label. Although NHTSA also makes the information available through means such as postings at *http://www.safercar.gov* and *http://www.nhtsa.dot.gov,* the additional Monroney label information is intended to provide consumers with relevant information at the point of sale.

(b) *Application.* This section applies to automobiles with a GVWR of 10,000 pounds or less, manufactured on or after September 1, 2010 that are declared by their manufacturer to be model year 2011 or later vehicles and that are required by the Automobile Information Disclosure Act, 15 U.S.C. 1231–1233, to have price sticker labels (Monroney labels), e.g. passenger vehicles, station wagons, passenger vans, and sport utility vehicles. Model Year 2011 or later vehicles manufactured prior to September 1, 2010 may, at the manufacturer's option, be labeled according to the provisions of this § 575.302 provided the ratings placed on the safety rating label are derived from vehicle testing conducted by the National Highway Traffic Safety Administration that is appropriate for Model Year 2011 or later vehicles.

(c) *Definitions*—(1) *Monroney label* means the label placed on new automobiles with the manufacturer's suggested retail price and other consumer information, as specified at 15 U.S.C. 1231–1233.

(2) *Safety rating label* means the label with NCAP safety rating information, as specified at 15 U.S.C. 1232(g). The safety rating label is part of the Monroney label.

(d) *Required Label*—(1) Except as specified in paragraph (f) of this section, each vehicle must have a safety rating label that is part of its Monroney label, meets the requirements specified in paragraph (e) of this section, and conforms in content, format and sequence to the sample label depicted in Figure 1 of this section. If NHTSA has not provided a safety rating for any category of vehicle performance for a vehicle, the manufacturer may use the smaller label specified in paragraph (f) of this section.

(2) The label must depict the star ratings for that vehicle as reported to the vehicle manufacturer by NHTSA.

(3) Whenever NHTSA informs a manufacturer in writing of a new safety rating for a specified vehicle or the continued applicability of an existing safety rating for a new model year, including any safety concerns, the manufacturer shall include the new or continued safety rating on vehicles manufactured on or after the date 30 calendar days after receipt by the manufacturer of the information.

(4) If, for a vehicle that has an existing safety rating for a category, NHTSA informs the manufacturer in writing that it has approved an optional NCAP test that will cover that category, the manufacturer may depict vehicles manufactured on or after the date of receipt of the information as "Not Rated" or "To Be Rated" for that category.

(5) The text "Overall Vehicle Score," "Frontal Crash," "Side Crash," "Rollover," "Driver," "Passenger," "Front Seat," "Rear Seat" and where applicable, "Not Rated" or "To Be Rated," the star graphic indicating each rating, as well as any text in the header and footer areas of the label, must have a minimum font size of 12 point. All remaining text and symbols on the label (including the star graphic specified in paragraph (e)(9)(i)(A) of this section), must have a minimum font size of 8 point.

(e) *Required Information and Format*—(1) *Safety Rating Label Border.* The safety rating label must be surrounded by a solid dark line that is a minimum of 3 points in width.

(2) *Safety Rating Label Size and Legibility.* The safety rating label must be presented in a legible, visible, and prominent fashion that covers at least 8 percent of the total area of the Monroney label (*i.e.,* including the safety rating label) or an area with a minimum of 4½ inches in length and 3½ inches in height on the Monroney label, whichever is larger.

(3) *Heading Area.* The words "Government 5-Star Safety Ratings" must be in boldface, capital letters that are light in color and centered The background must be dark.

(4) *Overall Vehicle Score Area.* (i) The overall vehicle score area must be placed immediately below the heading area and must have dark text and a light background. The overall vehicle score rating must be displayed with the maximum star rating achieved.

(ii) The words "Overall Vehicle Score" must be in boldface aligned to the left side of the label. The achieved star rating must be on the same line, aligned to the right side of the label.

(iii) The words "Based on the combined ratings of frontal, side and rollover.", followed (on the next line) by the statement "Should ONLY be compared to other vehicles of similar weight class." must be placed at the bottom of the overall vehicle score area.

(iv) If NHTSA has not released the star rating for the "Frontal Crash," "Side Crash," or "Rollover" area, the text "Not Rated" must be used in boldface. However, as an alternative, the words "To Be Rated" (in boldface) may be used if the manufacturer has received written notification from NHTSA that the vehicle has been chosen for the NCAP frontal, side, and/or rollover testing such that there will be ratings in all three areas.

(5) *Frontal Crash Area.* (i) The frontal crash area must be placed immediately below the overall vehicle score area, separated by a dark line that is a minimum of three points in width. The text must be dark against a light background. Both the driver and the right front seat passenger frontal crash test ratings must be displayed with the maximum star ratings achieved.

(ii) The words "Frontal Crash" must be in boldface, cover two lines, and be aligned to the left side of the label.

(iii) The word "Driver" must be on the same line as the word "Frontal" in "Frontal Crash," and be left justified, horizontally centered and vertically aligned at the top of the label. The achieved star rating for "Driver" must be on the same line, left justified, and aligned to the right side of the label.

(iv) If NHTSA has not released the star rating for the "Driver" position, the text "Not Rated" must be used in boldface. However, as an alternative, the words "To Be Rated" (in boldface) may be used if the manufacturer has received written notification from NHTSA that the vehicle has been chosen for NCAP testing. Both texts must be on the same line as the text "Driver", left justified, and aligned to the right side of the label.

(v) The word "Passenger" must be on the same line as the word "Crash" in "Frontal Crash," below the word "Driver," and be left justified, horizontally centered and vertically aligned at the top of the label. The

achieved star rating for "Passenger" must be on the same line, left justified, and aligned to the right side of the label.

(vi) If NHTSA has not released the star rating for "Passenger," the words "Not Rated" must be used in boldface. However, as an alternative, the words "To Be Rated" (in boldface) may be used if the manufacturer has received written notification from NHTSA that the vehicle has been chosen for NCAP testing. Both texts must be on the same line as the text "Passenger", left justified, and aligned to the right side of the label.

(vii) The words "Based on the risk of injury in a frontal impact.", followed (on the next line) by the statement "Should ONLY be compared to other vehicles of similar weight class." must be placed at the bottom of the frontal crash area.

(6) *Side Crash Area.* (i) The side crash area must be immediately below the frontal crash area, separated by a dark line that is a minimum of three points in width. The text must be dark against a light background. Both the driver and the rear seat passenger side crash test rating must be displayed with the maximum star rating achieved.

(ii) The words "Side Crash" must cover two lines, and be aligned to the left side of the label in boldface.

(iii) The words "Front seat" must be on the same line as the word "Side" in "Side Crash" and be left justified, horizontally centered and vertically aligned in the middle of the label. The achieved star rating for "Front seat" must be on the same line, left justified, and aligned to the right side of the label.

(iv) If NHTSA has not released the star rating for "Front Seat," the words "Not Rated" must be used in boldface. However, as an alternative, the words "To Be Rated" (in boldface) may be used if the manufacturer has received written notification from NHTSA that the vehicle has been chosen for NCAP testing. Both texts must be on the same line as the text "Front seat", left justified, and aligned to the right side of the label.

(v) The words "Rear seat" must be on the same line as the word "Crash" in "Side Crash," below the word "Front seat," and be left justified, horizontally centered and vertically aligned in the middle of the label. The achieved star rating for "Rear seat" must be on the same line, left justified, and aligned to the right side of the label.

(vi) If NHTSA has not released the star rating for "Rear Seat," the text "Not Rated" must be used in boldface. However, as an alternative, the text "To Be Rated" (in boldface) may be used if the manufacturer has received written notification from NHTSA that the vehicle has been chosen for NCAP testing. Both texts must be on the same line as the text "Rear seat", left justified, and aligned to the right side of the label.

(vii) The words "Based on the risk of injury in side impact tests." must be placed at the bottom of the side crash area.

(7) *Rollover Area.* (i) The rollover area must be immediately below the side crash area, separated by a dark line that is a minimum of three points in width. The text must be dark against a light background. The rollover test rating must be displayed with the maximum star rating achieved.

(ii) The word "Rollover" must be aligned to the left side of the label in boldface. The achieved star rating must be on the same line, aligned to the right side of the label.

(iii) If NHTSA has not tested the vehicle, the words "Not Rated" must be used in boldface. However, as an alternative, the words "To Be Rated" (in boldface) may be used if the manufacturer has received written notification from NHTSA that the vehicle has been chosen for NCAP testing. Both texts must be on the same line as the text "Rollover", left justified, and aligned to the right side of the label.

(iv) The words "Based on the risk of rollover in a single vehicle crash." must be placed at the bottom of the rollover area.

(8) *Graphics.* The star graphic is depicted in Figure 3 and the safety concern graphic is depicted in Figure 4.

(9) *Footer Area.* The footer area must be placed at the bottom of the label; the text must be in boldface letters that are light in color, and be centered. The background must be dark. The text must state the following, in the specified order, on separate lines:

(i) " Star ratings range from 1 to 5 stars (★★★★★) with 5 being the highest."

(ii) "Source: National Highway Traffic Safety Administration (NHTSA)"

(iii) "www.safercar.gov or 1–888–327–4236"

(10) *Safety Concern.* For vehicle tests for which NHTSA reports a safety concern as part of the safety rating, and for overall vehicle scores that are derived from vehicle tests for at least one of which NHTSA reports a safety concern as part of the safety rating, the label must:

(i) Depict, as a superscript to the star rating, the related symbol, as depicted in Figure 4 of this section, at ⅔ the font size of the base star, and

(ii) Include at the bottom of the relevant area (*i.e.,* overall vehicle score area, frontal crash area, side crash area, rollover area) as the last line of that area, in no smaller than 8 point type, the related symbol, as depicted in Figure 4 of this section, as a superscript of the rest of the line, and the text "Safety Concern: Visit *http://www.safercar.gov* or call 1–888–327–4236 for more details."

(11) No additional information may be provided in the safety rating label area. The specified information provided in a language other than English is not considered to be additional information.

(f) *Smaller Safety Rating Label for Vehicles With No Ratings.* (1) If NHTSA has not released a safety rating for any category for a vehicle, the manufacturer may use a smaller safety rating label that meets paragraphs (f)(2) through (f)(5) of this section. A sample label is depicted in Figure 2.

(2) The label must be at least 4½ inches in width and 1½ inches in height, and must be surrounded by a solid dark line that is a minimum of 3 points in width.

(3) *Heading Area.* The text must read "Government 5-Star Safety Ratings" and be in 14-point boldface, capital letters that are light in color, and be centered. The background must be dark.

(4) *General Information.* The general information area must be below the header area. The text must be dark and the background must be light. The text must state the following, in at least 12-point font, be left-justified, and aligned to the left side of the label: "This vehicle has not been rated by the government for overall vehicle score, frontal crash, side crash, or rollover risk."

(5) *Footer Area.* The footer area must be placed at the bottom of the label; the text must be in 12-point boldface letters that are light in color, and be centered. The background must be dark. The text must state the following, in the specified order, on separate lines:

(i) "Source: National Highway Traffic Safety Administration (NHTSA)" and

(ii) "*http://www.safercar.gov* or 1–888–327–4236".

(6) No additional information may be provided in the smaller safety rating label area. The specified information provided in a language other than English is not considered to be additional information.

(g) *Labels for alterers.* (1) If, pursuant to 49 CFR 567.7, a person is required to affix a certification label to a vehicle, and the vehicle has a safety rating label with one or more safety ratings, the alterer must also place another label on that vehicle as specified in this paragraph.

(2) The additional label (which does not replace the one required by 49 CFR 567.7) must read: "This vehicle has been altered. The stated star ratings on the safety rating label may no longer be applicable."

(3) The label must be placed adjacent to the Monroney label or as close to it as physically possible.

**Figure 1 to § 575.302**

**Sample Label for a Vehicle with At Least One Government 5-Star Safety Rating**

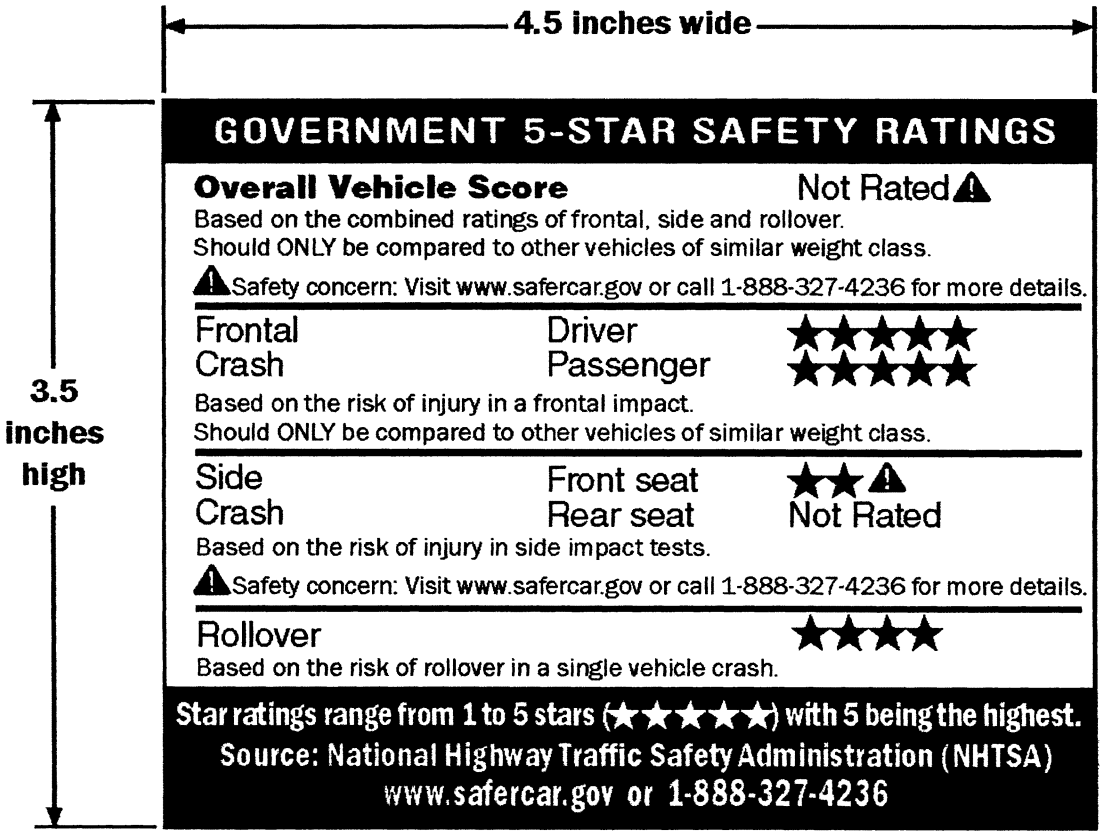


**Figure 2 to § 575.302**

**Sample Label for a Vehicle with No Government 5-Star Safety Ratings**

**Figure 3 to § 575.302**

**Sample Star Rating Graphic for § 575.302**

**Figure 4 to § 575.302**

**Sample Safety Concern Graphic for § 575.302**

Issued on: March 3, 2010.

**Stephen R. Kratzke,**

*Associate Administrator For Rulemaking.*

[FR Doc. 2010–4867 Filed 3–8–10; 8:45 am]

BILLING CODE 4910–59–P

# Notices

Federal Register

Vol. 75, No. 45

Tuesday, March 9, 2010

This section of the FEDERAL REGISTER contains documents other than rules or proposed rules that are applicable to the public. Notices of hearings and investigations, committee meetings, agency decisions and rulings, delegations of authority, filing of petitions and applications and agency statements of organization and functions are examples of documents appearing in this section.

## DEPARTMENT OF AGRICULTURE

### Forest Service

### Humboldt-Toiyabe National Forests; Santa Rosa Ranger District; Martin Basin Rangeland Management Project

**AGENCY:** Forest Service, USDA.

**ACTION:** Notice of Intent to prepare a Supplemental Environmental Impact Statement.

**SUMMARY:** The Santa Rosa Ranger District of the Humboldt-Toiyabe National Forest will prepare a Supplemental Environmental Impact Statement (SEIS) on a proposal to authorize continued livestock grazing on National Forest System (NFS) lands within the boundaries administered by the Santa Rosa Ranger District. The Project Area is located in Humboldt County, Nevada.

The preparation of this SEIS is needed because the Record of Decision issued on October 30, 2009 for the Martin Basin Rangeland Management Project was appealed. Following review, the decision to authorize grazing on three of the allotments in the Project Area (the Buffalo, Granite Creek, and Rebel Creek Allotments) was reversed due to inadequate analysis on the effects of domestic livestock grazing to the designated wilderness in these allotments. The supplemental analysis will provide additional analysis and disclosure of environmental effects to the designated wilderness in these allotments.

**DATES:** The Draft SEIS is expected to be released for public review and comment in March of 2010 and the new Final SEIS is expected to be released in July of 2010.

**ADDRESSES:** Send written comments to: Vernon Keller, NEPA Coordinator, Humboldt-Toiyabe National Forest, 1200 Franklin Way, Sparks, NV 89431.

**FOR FURTHER INFORMATION CONTACT:** For further information, mail correspondence to or contact Vernon Keller, NEPA Coordinator, Humboldt-Toiyabe National Forest, 1200 Franklin Way, Sparks, NV 89431. The telephone number is: 775–355–5356. E-mail address is: *vkeller@fs.fed.us.*

**SUPPLEMENTARY INFORMATION:**

#### Background

Initiation of the Martin Basin Rangeland Project began in 2002 with the original Notice of Intent published in the **Federal Register** on December 30, 2002 (Vol. 67, Number 250). The Draft EIS was released in May of 2004 for a 135-day comment period. The Final EIS was released in June of 2005 and a 45-day comment period was also provided at that time. The Record of Decision for this project was issued on June 2, 2006, by then Forest Supervisor Robert L. Vaught.

The Record of Decision for the Martin Basin Rangeland Project was appealed to the Intermountain Regional Forester. On September 6, 2006, the Regional Forester issued a decision on the appeal and remanded the decision back to the Humboldt-Toiyabe National Forest for additional analysis.

A Notice of Intent to prepare a Supplemental Environmental Impact Statement was published in the **Federal Register** on February 26, 2007 (Vol. 72, Number 37). That NOI estimated that the Draft Supplemental EIS would be released for review and comment on April 2007 and the Final Supplemental EIS would be completed by July 2007.

A Corrected Notice of Intent was published in the **Federal Register** on October 16, 2008 (Vol. 73, No. 201). That Corrected NOI provided notice that a new EIS was being prepared, instead of a supplement to the 2005 Final EIS. That notice also updated the estimated dates for release of the new Draft and Final EISs, and provided additional information on the Proposed Action and Possible Alternatives. The new Draft EIS was released in January of 2009 for a 45-day comment period. The Final EIS was released in November of 2009. The legal notice of the Record of Decision for this project was published on November 23, 2009, by Forest Supervisor Edward C. Monnig.

Two appeals were filed against the 2009 Record of Decision. On February 22, 2010, the portion of the decision to implement the Martin Basin Rangeland Project with the Santa Rosa Wilderness was reversed and the Forest Supervisor was instructed to complete additional analysis of the wilderness characteristics within the Santa Rosa Wilderness.

#### Purpose and Need for Action

As stated in Final EIS released in 2009, the purpose and need for the proposed federal action is to contribute economic value to grazing permittees in a way that sustains the health of the land and protects essential ecosystem functions and values.

#### Proposed Action

As outlined in the Final EIS released in 2009, the Proposed Action would authorize domestic livestock grazing on the eight allotments in the Project Area. Under this alternative, proper use criteria (utilization) would be based on the current ecological conditions (functioning, functioning-at-risk or non-functioning) within each allotment. The ecological condition of the allotments would continue to be evaluated through a long-term monitoring process. If long-term monitoring indicates the ecological condition of the allotment has changed, then the set of proper use criteria associated with that ecological condition would be applied to the allotment.

#### Possible Alternatives

In addition to the Proposed Action, two additional alternatives have been identified for analysis in the SEIS:

1. *Current Management Alternative:* Continue current grazing management.
2. *No Grazing Alternative:* Eliminate grazing in the Buffalo, Granite Creek, and Rebel Creek Allotments immediately.

#### Responsible Official

The responsible official is: Jeanne Higgins, Forest Supervisor, Humboldt-Toiyabe National Forest, 1200 Franklin Way, Sparks, NV 89431.

#### Nature of Decision To Be Made

Given the purpose and need, the deciding officer will decide whether or not to continue grazing on the Buffalo, Granite Creek, and Rebel Creek Allotments in the Martin Basin Rangeland Project area. If the decision is to continue grazing, then under what terms and conditions will livestock grazing be managed.

**Scoping Process**

The scoping period for this EIS was formally initiated on December 30, 2002 when the original Notice of Intent for this project was published in the **Federal Register** (Volume 67, Number 250). While no additional scoping periods are planned prior to the release of the Draft SEIS, those wishing to submit comments may do so at the address listed above for Vernon Keller, NEPA Coordinator. The Forest Service will use a mailing of information to notify interested parties of the preparation of the SEIS. Public involvement will be ongoing throughout the analysis process and at certain times public input will be specifically requested.

It is important that reviewers provide their comments at such times and in such manner that they are useful to the agency's preparation of the Environmental Impact Statement. Therefore, comments should be provided prior to the close of the comment period and should clearly articulate the reviewer's concerns and contentions.

**Authority:** 40 CFR 1501.7 and 1508.22; Forest Service Handbook 1909.15, Section 21.

Dated: February 26, 2010.

**Jeremiah C. Ingersoll,**

*Acting Forest Supervisor.*

[FR Doc. 2010–4747 Filed 3–8–10; 8:45 am]

BILLING CODE 3410–11–M

## COMMISSION ON CIVIL RIGHTS

### Agenda and Notice of Public Meeting of the Arkansas Advisory Committee

Notice is hereby given, pursuant to the provisions of the rules and regulations of the U.S. Commission on Civil Rights (Commission), and the Federal Advisory Committee Act (FACA), that a planning meeting of the Arkansas Advisory Committee to the Commission will convene by conference call at 2 p.m. and adjourn at approximately 3 p.m. on Thursday, April 8, 2010. The purpose of this meeting is to continue planning a civil rights project.

This meeting is available to the public through the following toll-free call-in number: (866) 364–7584, conference call access code number 60378320. Any interested member of the public may call this number and listen to the meeting. Callers can expect to incur charges for calls they initiate over wireless lines, and the Commission will not refund any incurred charges. Callers will incur no charge for calls they initiate over land-line connections to the toll-free telephone number. Persons with hearing impairments may also follow the proceedings by first calling the Federal Relay Service at 1–800–977–8339 and providing the Service with the conference call number and contact name Farella E. Robinson.

To ensure that the Commission secures an appropriate number of lines for the public, persons are asked to register by contacting Corrine Sanders of the Central Regional Office and TTY/TDD telephone number, by 4 p.m. on April 2, 2010.

Members of the public are entitled to submit written comments. The comments must be received in the regional office by May 2, 2010. The address is U.S. Commission on Civil Rights, 400 State Avenue, Suite 908, Kansas City, Kansas 66101. Comments may be e-mailed to *frobinson@usccr.gov.* Records generated by this meeting may be inspected and reproduced at the Central Regional Office, as they become available, both before and after the meeting. Persons interested in the work of this advisory committee are advised to go to the Commission's Web site, *http://www.usccr.gov,* or to contact the Central Regional Office at the above email or street address.

The meeting will be conducted pursuant to the provisions of the rules and regulations of the Commission and FACA.

Dated in Washington, DC, March 4, 2010.

**Peter Minarik, Acting Chief,**

*Regional Programs Coordination Unit.*

[FR Doc. 2010–4920 Filed 3–8–10; 8:45 am]

BILLING CODE 6335–01–P

## COMMISSION ON CIVIL RIGHTS

### Agenda and Notice of Public Meeting of the Mississippi Advisory Committee

Notice is hereby given, pursuant to the provisions of the rules and regulations of the U.S. Commission on Civil Rights (Commission), and the Federal Advisory Committee Act (FACA), that a meeting of the Mississippi Advisory Committee to the Commission will convene on Thursday, March 25, 2010 at 2 p.m. and adjourn at approximately 4:30 p.m. (CST) at Mississippi Center for Public Policy, 520 George Street, Jackson, MS. The purpose of the meeting is to plan a future civil rights project.

Members of the public are entitled to submit written comments. The comments must be received in the regional office by April 25, 2010. The address is U.S. Commission on Civil Rights, 400 State Avenue, Suite 908, Kansas City, Kansas 66101. Persons wishing to e-mail their comments, or to present their comments verbally at the meeting, or who desire additional information should contact Farella E. Robinson, Regional Director, Central Regional Office, at (913) 551–1400, (or for hearing impaired TDD 913–551–1414), or by e-mail to *frobinson@usccr.gov.*

Hearing-impaired persons who will attend the meeting and require the services of a sign language interpreter should contact the Regional Office at least ten (10) working days before the scheduled date of the meeting.

Records generated from this meeting may be inspected and reproduced at the Central Regional Office, as they become available, both before and after the meeting. Persons interested in the work of this advisory committee are advised to go to the Commission's Web site, *http://www.usccr.gov,* or to contact the Central Regional Office at the above e-mail or street address.

The meeting will be conducted pursuant to the provisions of the rules and regulations of the Commission and FACA.

Dated in Washington, DC on March 4, 2010.

**Peter Minarik,**

*Acting Chief, Regional Programs Coordination Unit.*

[FR Doc. 2010–4922 Filed 3–8–10; 8:45 am]

BILLING CODE 6335–01–P

## DEPARTMENT OF COMMERCE

### National Oceanic and Atmospheric Administration

### Proposed Information Collection; Comment Request; 2010 NOAA Engagement Survey Tool

**AGENCY:** National Oceanic and Atmospheric Administration (NOAA), DOC.

**ACTION:** Notice.

**SUMMARY:** The Department of Commerce, as part of its continuing effort to reduce paperwork and respondent burden, invites the general public and other Federal agencies to take this opportunity to comment on proposed and/or continuing information collections, as required by the Paperwork Reduction Act of 1995.

**DATES:** Written comments must be submitted on or before April 30, 2010.

**ADDRESSES:** Direct all written comments to Diana Hynek, Departmental Paperwork Clearance Officer,

Department of Commerce, Room 6625, 14th and Constitution Avenue, NW., Washington, DC 20230 (or via the Internet at *dHynek@doc.gov).*

**FOR FURTHER INFORMATION CONTACT:** Requests for additional information or copies of the information collection instrument and instructions should be directed to Louisa Koch, Director, NOAA Office of Education, (202) 482–2563 or *Louisa.Koch@noaa.gov.*

**SUPPLEMENTARY INFORMATION:**

## I. Abstract

NOAA supplies the nation with information, products and services that are essential public goods used in public and private sectors, science institutions and households around the world. Because NOAA's information, products and services are important to both the nation as a whole and to the daily lives of U.S. citizens, NOAA's Science Advisory Board (SAB) has identified a need for more effective two-way communication between its programs and the customers and clients it serves. This survey instrument will be used by NOAA's Office of Education and the Gulf of Mexico Regional Collaboration Team to obtain information used to assess NOAA's accessibility, responsiveness and respect for partners. These parameters are three of the seven parameters included in the Kellogg Engagement Test, which the SAB recommended NOAA use for assessing engagement with constituents. One objective of the survey is to collect responses to provide NOAA with information and feedback from its constituents that will lead to greater emphasis placed on the needs of NOAA partners, techniques to improve NOAA's products and services, and general improvement in the accessibility and responsiveness of NOAA to constituents. A longer term objective is for this survey to become a standard NOAA tool accessing engagement with constituents.

## II. Method of Collection

Primarily, respondents will be asked to complete the survey online through the web-based survey tool "*Survey Monkey*" (*http://www.surveymonkey.com*). Alternatively, a print version of the survey will be made available upon request, which can be returned by mail or facsimile.

## III. Data

*OMB Control Number:* None.
*Form Number:* None.
*Type of Review:* Regular submission.
*Affected Public:* Non-profit institutions; Federal, State or local government; business or other for-profit organizations.
*Estimated Number of Respondents:* 3,000.
*Estimated Time Per Response:* 15 minutes.
*Estimated Total Annual Burden Hours:* 750.
*Estimated Total Annual Cost to Public:* $50 in record keeping/reporting costs.

## IV. Request for Comments

Comments are invited on: (a) Whether the proposed collection of information is necessary for the proper performance of the functions of the agency, including whether the information shall have practical utility; (b) the accuracy of the agency's estimate of the burden (including hours and cost) of the proposed collection of information;

(c) ways to enhance the quality, utility, and clarity of the information to be collected; and (d) ways to minimize the burden of the collection of information on respondents, including through the use of automated collection techniques or other forms of information technology.

Comments submitted in response to this notice will be summarized and/or included in the request for OMB approval of this information collection; they also will become a matter of public record.

Dated: March 4, 2010.

**Gwellnar Banks,**

*Management Analyst, Office of the Chief Information Officer.*

[FR Doc. 2010–4952 Filed 3–8–10; 8:45 am]

**BILLING CODE 3510–KA–P**

---

# DEPARTMENT OF COMMERCE

## National Oceanic and Atmospheric Administration

## Proposed Information Collection; Comment Request; Amendment 80 Economic Data Report for the Catcher/Processor Non-AFA Trawl Sector

**AGENCY:** National Oceanic and Atmospheric Administration (NOAA), DOC.

**ACTION:** Notice.

**SUMMARY:** The Department of Commerce, as part of its continuing effort to reduce paperwork and respondent burden, invites the general public and other Federal agencies to take this opportunity to comment on proposed and/or continuing information collections, as required by the Paperwork Reduction Act of 1995.

**DATES:** Written comments must be submitted on or before May 10, 2010.

**ADDRESSES:** Direct all written comments to Diana Hynek, Departmental Paperwork Clearance Officer, Department of Commerce, Room 6625, 14th and Constitution Avenue, NW., Washington, DC 20230 (or via the Internet at *dHynek@doc.gov).*

**FOR FURTHER INFORMATION CONTACT:** Requests for additional information or copies of the information collection instrument and instructions should be directed to Patsy A. Bearden, at (907) 586–7008 or *patsy.bearden@noaa.gov.*

**SUPPLEMENTARY INFORMATION:**

## I. Abstract

Amendment 80 to the Fishery Management Plan for Groundfish of the Bering Sea and Aleutian Islands Management Area primarily allocates several Bering Sea and Aleutian Islands Management Area non-pollock trawl groundfish fisheries among fishing sectors, and facilitates the formation of harvesting cooperatives in the catcher/processor sector of the non-American Fisheries Act (non-AFA) Trawl Catcher/processor Cooperative Program (Program). The Program established a limited access privilege program for the non-AFA trawl catcher/processor sector.

The Amendment 80 economic data report (EDR) collects cost, revenue, ownership, and employment data on an annual basis and provides information unavailable through other means to review the Program. The purpose of the EDR is to understand the economic effects of the Amendment 80 program on vessels or entities regulated by the Program, and to inform future management actions. Data collected through the EDR is mandatory for all Amendment 80 quota share (QS) holders.

## II. Method of Collection

EDR forms are available in fillable PDF format through the Internet on the NMFS Alaska Region Web site at *http://alaskafisheries.noaa.gov.* Pacific States Marine Fisheries Commission (PSMFC) was designated by NMFS to be the Data Collection Agent for the Amendment 80 EDR Program. PSMFC mails EDR announcements and filing instructions to Amendment 80 QS permit holders by April 1 of each year. Methods of submittal include mail and facsimile transmission of paper forms.

## III. Data

*OMB Control Number:* 0648–0564.
*Form Number:* None.
*Type of Review:* Regular submission.
*Affected Public:* Business or other for-profit organizations; individuals or households.

*Estimated Number of Respondents:* 28.

*Estimated Time Per Response:* Amendment 80 EDR, 40 hours; Verification of Data, 3 hours.

*Estimated Total Annual Burden Hours:* 1,204.

*Estimated Total Annual Cost to Public:* $42 in recordkeeping/reporting costs.

## IV. Request for Comments

Comments are invited on: (a) Whether the proposed collection of information is necessary for the proper performance of the functions of the agency, including whether the information shall have practical utility; (b) the accuracy of the agency's estimate of the burden (including hours and cost) of the proposed collection of information;

(c) ways to enhance the quality, utility, and clarity of the information to be collected; and (d) ways to minimize the burden of the collection of information on respondents, including through the use of automated collection techniques or other forms of information technology.

Comments submitted in response to this notice will be summarized and/or included in the request for OMB approval of this information collection; they also will become a matter of public record.

Dated: March 4, 2010.

**Gwellnar Banks,**

*Management Analyst, Office of the Chief Information Officer.*

[FR Doc. 2010–4947 Filed 3–8–10; 8:45 am]

**BILLING CODE 3510–22–P**

---

# DEPARTMENT OF COMMERCE

## National Oceanic and Atmospheric Administration

## Proposed Information Collection; Comment Request; Alaska Region Amendment 80 Permits and Reports

**AGENCY:** National Oceanic and Atmospheric Administration (NOAA), DOC.

**ACTION:** Notice.

**SUMMARY:** The Department of Commerce, as part of its continuing effort to reduce paperwork and respondent burden, invites the general public and other Federal agencies to take this opportunity to comment on proposed and/or continuing information collections, as required by the Paperwork Reduction Act of 1995.

**DATES:** Written comments must be submitted on or before May 10, 2010.

**ADDRESSES:** Direct all written comments to Diana Hynek, Departmental Paperwork Clearance Officer, Department of Commerce, Room 6625, 14th and Constitution Avenue, NW., Washington, DC 20230 (or via the Internet at *dHynek@doc.gov).*

**FOR FURTHER INFORMATION CONTACT:** Requests for additional information or copies of the information collection instrument and instructions should be directed to Patsy A. Bearden, at (907) 586–7008 or *patsy.bearden@noaa.gov.*

**SUPPLEMENTARY INFORMATION:**

## I. Abstract

Amendment 80 to the Fishery Management Plan for Groundfish of the Bering Sea and Aleutian Islands Management Area (BSAI FMP), primarily allocates BSAI non-pollock trawl groundfish fisheries among fishing sectors and facilitates the formation of harvesting cooperatives in the head-and-gut trawl catcher/processor sector. Sector allocations and associated cooperatives allow participants to focus less on harvest rate maximization and more on optimizing their harvest. This, in turn, allows a reduction in unwanted incidental catch, improved retention, improved utilization, and improved economic health of the head-and-gut trawl catcher/processor sector. Amendment 80 established a limited access privilege program for the non-American Fisheries Act (non-AFA) trawl catcher/processor sector.

The Amendment 80 permits and reports collection provides participants with a management system that allows for improved efficiency by providing an environment in which, revenues can be increased and operating costs can be reduced. Depending on the magnitude of these potential efficiency gains and the costs of bycatch reduction, increases in efficiency could be used to cover the costs of bycatch reduction measures or provide additional benefits to participants.

Licenses and vessels used to qualify for the Amendment 80 Program (either to be included in the non-AFA trawl catcher/processor sector or to be used in Amendment 80 cooperative formation) are restricted from being used outside of the Amendment 80 sector, except that any eligible vessel authorized to fish pollock under the AFA would still be authorized to fish under this statute.

The fishery participants that join a cooperative receive an exclusive harvest privilege not subject to harvest by other vessel operators; may consolidate fishing operations on a specific vessel or subset of vessels, thereby reducing monitoring and enforcement and other operational costs; and harvest fish in a more economically efficient and less wasteful manner.

## II. Method of Collection

Respondents have a choice of either electronic or paper forms. Methods of submittal include e-mail of electronic forms, and mail and facsimile transmission of paper forms.

## III. Data

*OMB Control Number:* 0648–0565.

*Form Number:* None.

*Type of Review:* Regular submission.

*Affected Public:* Business or other for-profit organizations; Individuals or households.

*Estimated Number of Respondents:* 44.

*Estimated Time per Response:* Application for Amendment 80 cooperative and cooperative quota permit, application for Amendment 80 quota share, application for Amendment 80 limited access fishery, application to transfer Amendment 80 quota share and application to transfer Amendment 80 cooperative quota, 2 hours; Amendment 80 cooperative catch report, 30 minutes; annual Amendment 80 cooperative report and appeals, 4 hours.

*Estimated Total Annual Burden Hours:* 896.

*Estimated Total Annual Cost to Public:* $2,732 in recordkeeping/reporting costs.

## IV. Request for Comments

Comments are invited on: (a) Whether the proposed collection of information is necessary for the proper performance of the functions of the agency, including whether the information shall have practical utility; (b) the accuracy of the agency's estimate of the burden (including hours and cost) of the proposed collection of information; (c) ways to enhance the quality, utility, and clarity of the information to be collected; and (d) ways to minimize the burden of the collection of information on respondents, including through the use of automated collection techniques or other forms of information technology.

Comments submitted in response to this notice will be summarized and/or included in the request for OMB approval of this information collection; they also will become a matter of public record.

Dated: March 4, 2010.

**Gwellnar Banks,**

*Management Analyst, Office of the Chief Information Officer.*

[FR Doc. 2010–4951 Filed 3–8–10; 8:45 am]

**BILLING CODE 3510–22–P**

## DEPARTMENT OF COMMERCE

### International Trade Administration

**[A–533–824, C–533–825]**

### Polyethylene Terephthalate Film, Sheet and Strip from India: Initiation of Antidumping Duty and Countervailing Duty New Shipper Reviews

**AGENCY:** Import Administration, International Trade Administration, Department of Commerce.

**SUMMARY:** The Department of Commerce (the Department) has received requests to conduct new shipper reviews of the antidumping (AD) and countervailing duty (CVD) orders on Polyethylene Terephthalate Film, Sheet and Strip (PET Film) from India. The Department determines that these requests are sufficient to meet the regulatory requirements for initiation. *See* 19 CFR 351.214(c). The period of review (POR) for the AD new shipper review is July 1, 2009 to December 31, 2009, and, for the CVD new shipper review, it is January 1, 2009 to December 31, 2009.

**EFFECTIVE DATE:** March 9, 2010.

**FOR FURTHER INFORMATION CONTACT:** Elfi Blum or Mark Hoadley, AD/CVD Operations, Office 6, Import Administration, International Trade Administration, U.S. Department of Commerce, 14th Street and Constitution Avenue, NW, Washington, DC 20230; telephone: (202) 482–0197 or (202) 482–3148, respectively.

**SUPPLEMENTARY INFORMATION:**

#### Background

The notice announcing the antidumping duty order on PET Film from India was published on July 1, 2002. *See Notice of Amended Final Antidumping Duty Determination of Sales at Less Than Fair Value and Antidumping Duty Order: Polyethylene Terephthalate Film, Sheet, and Strip from India*, 67 FR 44175 (July 1, 2002) (Antidumping Duty Order). The notice announcing the countervailing duty order on PET Film from India was also published on July 1, 2002. *See Notice of Countervailing Duty Order: Polyethylene Terephthalate Film, Sheet and Strip (PET Film) from India,* 67 FR 44179 (July 1, 2002) (Countervailing Duty Order). On December 24, 2009, the Department received timely requests for AD and CVD new shipper reviews from SRF Limited in accordance with 19 CFR 351.214(c). In its requests, SRF Limited certified that it is both the producer and exporter of all of the PET Film it exported to the United States, which is the basis for its requests for new shipper reviews.

Pursuant to the requirements set forth in 19 CFR 351.214(b)(2)(i) and (iii), in its requests for new shipper reviews, SRF Limited certified that (1) it did not export PET Film to the United States during the periods of investigation (POI) in the AD and CVD investigations; and (2) since the initiation of the investigations, it has never been affiliated with any company that exported subject merchandise to the United States during the POI, including any exporter or producer not individually examined during the investigations.

In accordance with 19 CFR 351.214(b)(2)(iv), SRF Limited submitted documentation establishing the following: (1) the date on which it first shipped PET Film for export to the United States and the date on which the PET Film was first entered, or withdrawn from warehouse, for consumption; (2) the volume of its first shipment; and (3) the date of its first sale to an unaffiliated customer in the United States. Further, SRF Limited certified in its request for a CVD new shipper review, that it has also informed the Government of India that it is requesting this review and that the government will be required to provide a full response to the Department's questionnaires. *See* 19 CFR 351.214(b)(2)(v). SRF Limited stated that it had not made any subsequent shipments of PET film to the United States.

The Department confirmed, by examining U.S. Customs and Border Protection data, that an entry by SRF Limited was entered during the periods of review. After examining these data, the Department intends to request additional information from SRF Limited about merchandise that it exported. For a more detailed discussion, see Memorandum to the File from Mark Hoadley, Program Manager, Office 6, "New Shipper Review Initiation Checklist," dated concurrently with this notice, at 5–6 (*Initiation Checklist*), on file in the Central Records Unit, room 1117, of the main Commerce building.

#### Initiation of New Shipper Reviews

Pursuant to 19 CFR 351.221(c), the Department will publish a notice of initiation concerning a new shipper review no later than the last day of the month following the anniversary (or semiannual anniversary) month, as appropriate. As explained in the memorandum from the Deputy Assistant Secretary (DAS) for Import Administration, the Department has exercised its discretion to toll deadlines for the duration of the closure of the Federal Government from February 5, through February 12, 2010. Thus, all deadlines in this segment of the proceeding have been extended by seven days. The revised deadline for the initiation of these new shipper reviews is now March 8, 2010. *See* Memorandum to the Record from Ronald Lorentzen, DAS for Import Administration, regarding "Tolling of Administrative Deadlines As a Result of the Government Closure During the Recent Snowstorm," dated February 12, 2010.

We find that the requests submitted by SRF Limited meet the threshold requirements for initiation of AD and CVD new shipper reviews for shipments of PET Film from India. Accordingly, pursuant to section 751(a)(2)(B) of the Tariff Act of 1930, as amended (the Act) and 19 CFR 351.214(d)(1), and based on the information on the record, we are initiating these new shipper reviews for SRF Limited. See also Initiation Checklist. We intend to issue the preliminary results of these reviews no later than 180 days after the date on which these reviews are initiated, and the final results of these reviews within 90 days after the date on which the preliminary results are issued, in accordance with section 751(a)(2)(B)(iv) of the Act.

We will instruct U.S. Customs and Border Protection to allow, at the option of the importer, the posting of a bond or security of both the AD and CVD duties in lieu of a cash deposit for each entry of the subject merchandise from SRF Limited during the pendency of these reviews, in accordance with 19 CFR 351.214(e). Because SRF Limited certified that it both produced and exported the subject merchandise, the sale of which is the basis for these new shipper review requests, we will apply the bonding privilege to SRF Limited only for subject merchandise which SRF Limited both produced and exported.

Interested parties requiring access to proprietary information in this new shipper review should submit applications for disclosure under administrative protective order in accordance with 19 CFR 351.305.

This initiation and notice are in accordance with section 751(a)(2)(B) of the Act and 19 CFR 351.214 and 351.221(c)(1)(i).

Dated: March 2, 2010.

**John M. Andersen.**

*Acting Deputy Assistant Secretary for Antidumping and Countervailing Duty Operations.*

[FR Doc. 2010–5027 Filed 3–8–10; 8:45 am]

**BILLING CODE 3510–DS–S**

## DEPARTMENT OF COMMERCE

### International Trade Administration

**[A–533–838]**

### Carbazole Violet Pigment 23 from India: Initiation of Antidumping Duty Changed–Circumstances Review

**AGENCY:** Import Administration, International Trade Administration, Department of Commerce

**SUMMARY:** Pursuant to section 751(b) of the Tariff Act of 1930, as amended, and 19 CFR 351.216 and 351.221(c)(3), the Department of Commerce is initiating a changed–circumstances review of the antidumping duty order on carbazole violet pigment 23 from India with respect to Meghmani Pigments.

**EFFECTIVE DATE:** March 9, 2010.

**FOR FURTHER INFORMATION CONTACT:** FOR FURTHER INFORMATION: Jerrold Freeman or Richard Rimlinger, AD/CVD Operations, Office 5, Import Administration, International Trade Administration, U.S. Department of Commerce, 14th Street and Constitution Avenue, NW, Washington, DC 20230; telephone: (202) 482–0180 or (202) 482–4477, respectively.

**SUPPLEMENTARY INFORMATION:**

#### Background

On December 29, 2004, we published in the **Federal Register** the antidumping duty order on carbazole violet pigment 23 (CVP 23) from India. *See Notice of Amended Final Determination of Sales at Less Than Fair Value and Antidumping Duty Order: Carbazole Violet Pigment 23 From India*, 69 FR 77988 (December 29, 2004). On December 1, 2009, we published in the **Federal Register** a notice of opportunity to request an administrative review of the antidumping duty order on CVP 23 from India. See *Antidumping or Countervailing Duty Order, Finding, or Suspended Investigation; Opportunity To Request Administrative Review*, 74 FR 62743 (December 1, 2009). On December 11, 2009, Alpanil Industries (Alpanil) informed the Department that, on April 9, 2009, Alpanil changed its name officially to Meghmani Pigments (Meghmani). On December 31, 2009, pursuant to section 751(a) of the Tariff Act of 1930, as amended (the Act), and 19 CFR 351.213(b), Meghmani requested an administrative review of the order. On January 29, 2010, in accordance with section 751(a) of the Act and 19 CFR 351.221(c)(1)(i), we published a notice of initiation of administrative review of the order. See *Initiation of Antidumping and Countervailing Duty Administrative Reviews, Request for Revocation in Part, and Deferral of Initiation of Administrative Review*, 75 FR 4770 (January 29, 2010). We did not receive a request from Alpanil, Meghmani, or any other interested parties for a changed–circumstances review with respect to the name change.

#### Scope of the Order

The merchandise subject to the order is CVP 23 identified as Color Index No. 51319 and Chemical Abstract No. 6358–30–1, with the chemical name of diindolo [3,2–b:3?,2?-m][1] triphenodioxazine, 8,18–dichloro–5, 15–diethyl–5, 15–dihydro-, and molecular formula of C34H22Cl2N4O2. The subject merchandise includes the crude pigment in any form (*e.g.*, dry powder, paste, wet cake) and finished pigment in the form of presscake and dry color. Pigment dispersions in any form (*e.g.*, pigment dispersed in oleoresins, flammable solvents, water) are not included within the scope of the order. The merchandise subject to the order is classifiable under subheading 3204.17.90.40 of the Harmonized Tariff Schedule of the United States (HTSUS). Although the HTSUS subheading is provided for convenience and customs purposes, the written description of the scope of the order is dispositive.

#### Initiation of Changed–Circumstances Review

Pursuant to section 751(b)(1) of the Act of and 19 CFR 351.216(d), the Department will conduct a changed–circumstances review upon receipt of information concerning, or a request from an interested party for a review of, an antidumping duty order which shows changed circumstances sufficient to warrant a review of the order. Based on the information Alpanil submitted on December 11, 2009, we find that we have received information which shows changed circumstances sufficient to warrant initiation of such a review. See 19 CFR 351.216(d). Therefore, in accordance with the above–referenced statute and regulation, the Department is initiating a changed–circumstances review.

Because we are currently conducting an administrative review of the order covering the period December 1, 2008, through November 30, 2009, we will conduct the changed–circumstances review in the context of the 2008–09 administrative review. In accordance with 19 CFR 351.221(b)(2), we will issue a questionnaire requesting factual information pertinent to the changed–circumstances review. We intend to issue the preliminary results of the changed–circumstances review when we issue the preliminary results of the 2008–09 administrative review and we intend to issue the final results of the changed–circumstances review when we issue the final results of the 2008–09 administrative review. During the course of this review, we will not change the cash–deposit requirements for the subject merchandise. The cash–deposit rate will be altered, if warranted, pursuant only to the final results of the changed–circumstances and/or administrative review.

This notice of initiation is in accordance with section 751(b)(1) of the Act and 19 CFR 351.221(b)(1).

Dated: March 3, 2010.

**Edward C. Yang,**

*Acting Deputy Assistant Secretary for Antidumping and Countervailing Duty Operations.*

[FR Doc. 2010–5017 Filed 3–8–10; 8:45 am]

**BILLING CODE 3510–DS–S**

[1] The bracketed section of the product description, [3,2–b:3?,2?-m], is not business–proprietary information. In this case, the brackets are simply part of the chemical nomenclature.

## DEPARTMENT OF COMMERCE

### National Oceanic and Atmospheric Administration

**RIN 0648–XU92**

### New England Fishery Management Council; Public Meeting

**AGENCY:** National Marine Fisheries Service (NMFS), National Oceanic and Atmospheric Administration (NOAA), Commerce.

**ACTION:** Notice; public meeting.

**SUMMARY:** The New England Fishery Management Council (Council) is scheduling a public meeting of its Scientific and Statistical Committee on March 16–17, 2010, to consider actions affecting New England fisheries in the exclusive economic zone (EEZ). Recommendations from this group will be brought to the full Council for formal consideration and action, if appropriate.

**DATES:** This meeting will be held on Tuesday, March 16, at 10 a.m. and Wednesday, March 17, 2010, at 8:30 a.m.

**ADDRESSES:** Meeting address: The meeting will be held at the Westin Boston Waterfront, 425 Summer Street, Boston, MA 02210; telephone: (617) 532–4600; fax: (617) 532–4889.

Council address: New England Fishery Management Council, 50 Water Street, Mill 2, Newburyport, MA 01950.

**FOR FURTHER INFORMATION CONTACT:** Paul J. Howard, Executive Director, New

England Fishery Management Council; telephone: (978) 465–0492.

**SUPPLEMENTARY INFORMATION:**

**Tuesday, March 16, 2010**

The Scientific and Statistical Committee (SSC) will discuss recommendations for the 2011–2013 red crab Acceptable Biological Catch (ABC) and review and possibly consider the 2010 ABC recommendation.

**Wednesday, March 17, 2010**

The SSC will reconsider the 2010–2011 ABC recommendation for the skate complex using updated survey data; review the Ecosystem-Based Fishery Management draft policy paper and recommend Terms of Reference and SSC representation for the fall 2010 SARC.

Although non-emergency issues not contained in this agenda may come before this group for discussion, those issues may not be the subject of formal action during this meeting. Recommendations will be restricted to those issues specifically listed in this notice and any issues arising after publication of this notice that require emergency action under section 305(c) of the Magnuson-Stevens Act, provided the public has been notified of the Council's intent to take final action to address the emergency.

**Special Accommodations**

This meeting is physically accessible to people with disabilities. Requests for sign language interpretation or other auxiliary aids should be directed to Paul J. Howard, Executive Director, at 978–465–0492, at least 5 days prior to the meeting date.

**Authority:** 16 U.S.C. 1801 *et seq.*

Dated: March 4, 2010.

**William D. Chappell,**

*Acting Director, Office of Sustainable Fisheries, National Marine Fisheries Service.*

[FR Doc. 2010–4984 Filed 3–4–10; 4:15 pm]

**BILLING CODE 3510–22–S**

## DEPARTMENT OF COMMERCE

### Bureau of the Census

### 2010 Census Advisory Committee

**AGENCY:** Bureau of the Census, Department of Commerce.

**ACTION:** Notice of public meeting.

**SUMMARY:** The Bureau of the Census (Census Bureau) is giving notice of a meeting of the 2010 Census Advisory Committee. The Committee will address policy, research, and technical issues related to 2010 Decennial Census Programs and the American Community Survey. Last-minute changes to the agenda are possible, which could prevent giving advance notification of schedule changes.

**DATES:** April 8–9, 2010. On April 8, the meeting will begin at approximately 8:30 a.m. and end at approximately 5:15 p.m. On April 9, the meeting will begin at approximately 8:30 a.m. and end at approximately 12:30 p.m.

**ADDRESSES:** The meeting will be held at the U.S. Census Bureau Auditorium and Conference Center, 4600 Silver Hill Road, Suitland, Maryland 20746.

**FOR FURTHER INFORMATION CONTACT:** Jeri Green, Committee Liaison Officer, Department of Commerce, U.S. Census Bureau, Room 8H182, 4600 Silver Hill Road, Suitland, Maryland 20746, telephone 301–763–6590. For TTY callers, please use the Federal Relay Service 1–800–877–8339.

**SUPPLEMENTARY INFORMATION:** The 2010 Census Advisory Committee is composed of a Chair, Vice-Chair, and 20 member organizations—all appointed by the Secretary of Commerce. The Committee considers the goals of the decennial census, including the American Community Survey and related programs, and users' needs for information provided by the decennial census from the perspective of outside data users and other organizations having a substantial interest and expertise in the conduct and outcome of the decennial census. The Committee has been established in accordance with the Federal Advisory Committee Act (Title 5, United States Code, Appendix 2, Section 10).

The meeting is open to the public, and a brief period is set aside for public comments and questions. However, individuals with extensive statements for the record must submit them in writing to the Census Bureau Committee Liaison Officer named above at least three working days prior to the meeting. Seating is available to the public on a first-come, first-served basis.

The meeting is physically accessible to people with disabilities. Requests for sign language interpretation or other auxiliary aids should be directed to the Census Bureau Committee Liaison Officer as soon as known, and preferably two weeks prior to the meeting.

Due to increased security and for access to the meeting, please call 301–763–3231 upon arrival at the Census Bureau on the day of the meeting. A valid photo ID must be presented in order to receive your visitor's badge. Visitors are not allowed beyond the first floor.

Dated: March 2, 2010.

**Robert M. Groves,**

*Director, Bureau of the Census.*

[FR Doc. 2010–4906 Filed 3–8–10; 8:45 am]

**BILLING CODE 3510–07–P**

## DEPARTMENT OF COMMERCE

### National Oceanic and Atmospheric Administration

**RIN 0648–XU78**

### Gulf of Mexico Fishery Management Council; Public Meeting

**AGENCY:** National Marine Fisheries Service (NMFS), National Oceanic and Atmospheric Administration (NOAA), Commerce.

**ACTION:** Council to convene public meeting.

**SUMMARY:** The Gulf of Mexico Fishery Management Council will convene a joint meeting of the Standing and Special Reef Fish Scientific and Statistical Committees.

**DATES:** The meeting will convene at 9 a.m. on Tuesday, March 23, 2010 and conclude by 3 p.m. on Wednesday, March 24, 2010.

**ADDRESSES:** The meeting will be held at the Gulf of Mexico Fishery Management Council, 2203 North Lois Avenue, Suite 1100, Tampa, FL 33607; telephone: (813) 348–1630.

*Council address*: Gulf of Mexico Fishery Management Council, 2203 N. Lois Avenue, Suite 1100, Tampa, FL 33607.

**FOR FURTHER INFORMATION CONTACT:** Steven Atran, Population Dynamics Statistician; Gulf of Mexico Fishery Management Council; telephone: (813) 348–1630.

**SUPPLEMENTARY INFORMATION:** On the first day of the meeting, the Standing Scientific and Statistical Committees will meet to complete the development of a set of control rules being developed to set acceptable biological catch for data adequate and data-poor stocks and stock assemblages. The Scientific and Statistical Committees may also select a set of stocks or stock assemblages to use as case studies for applying the control rules. The Scientific and Statistical Committees will also discuss what scientific advice it can give to the Council in deciding whether and where to set a minimum stock threshold below which harvest would be prohibited.

On the second day of the meeting, the Standing and Special Reef Fish Scientific and Statistical Committees will meet jointly to review the SEDAR 19 black grouper stock assessment and

to recommend a level of acceptable biological catch. The Scientific and Statistical Committees will also review a request from the Council to provide advice on the best approach to collect fishery independent data that can be used in the next red snapper assessments.

Copies of the agenda and other related materials can be obtained by calling (813) 348–1630 or can be downloaded from the Council's ftp site, *ftp.gulfcouncil.org*. To get directly to the folder containing the meeting materials, click on Standing and Reef Fish SSC meeting - March 2010.

Although other non-emergency issues not on the agenda may come before the Scientific and Statistical Committees for discussion, in accordance with the Magnuson-Stevens Fishery Conservation and Management Act, those issues may not be the subject of formal action during this meeting. Actions of the Scientific and Statistical Committees will be restricted to those issues specifically identified in the agenda and any issues arising after publication of this notice that require emergency action under Section 305(c) of the Magnuson-Stevens Fishery Conservation and Management Act, provided the public has been notified of the Council's intent to take action to address the emergency.

## Special Accommodations

This meeting is physically accessible to people with disabilities. Requests for sign language interpretation or other auxiliary aids should be directed to Tina O'Hern at the Council (see **ADDRESSES**) at least 5 working days prior to the meeting.

Dated: March 4, 2010.

**William D. Chappell,**

*Acting Director, Office of Sustainable Fisheries, National Marine Fisheries Service.*

[FR Doc. 2010–4971 Filed 3–8–10; 8:45 am]

**BILLING CODE 3510–22–S**

---

## DEPARTMENT OF COMMERCE

### International Trade Administration

**C–560–824**

### Certain Coated Paper from Indonesia: Preliminary Affirmative Countervailing Duty Determination and Alignment of Final Countervailing Duty Determination with Final Antidumping Duty Determination

**AGENCY:** Import Administration, International Trade Administration, Department of Commerce.

**SUMMARY:** The Department of Commerce (the Department) preliminarily determines that countervailable subsidies are being provided to producers and exporters of certain coated paper suitable for high–quality print graphics using sheet–fed presses (certain coated paper or CCP) in Indonesia. For information on the estimated subsidy rates, see the "Suspension of Liquidation" section of this notice.

**EFFECTIVE DATE:** March 9, 2010.

**FOR FURTHER INFORMATION CONTACT:** Myrna Lobo, Nicholas Czajkowski, or Justin Neuman, AD/CVD Operations, Office 6, Import Administration, International Trade Administration, U.S. Department of Commerce, 14th Street and Constitution Avenue, NW, Washington, DC 20230; telephone: (202) 482–2371, (202) 482–1395, and (202) 482–0486, respectively.

**SUPPLEMENTARY INFORMATION:**

## Case History

On October 13, 2009, the Department initiated a countervailing duty (CVD) investigation of certain coated paper from Indonesia. *See Certain Coated Paper from Indonesia: Initiation of Countervailing Duty Investigation*, 74 FR 53707 (October 20, 2009) (*Initiation Notice*).[1] In the Initiation Notice, the Department set aside a period for all interested parties to raise issues regarding product coverage. The comments we received are discussed in the "Scope Comments" section below.

In the *Initiation Notice*, the Department identified the Asia Pulp & Paper/Sinar Mas Group (APP/SMG), through the Indonesian paper mills it operates, as the mandatory company respondent in this investigation. Respondent APP/SMG companies identified in this investigation are PT. Pabrik Kertas Tjiwi Kimia Tbk. (Tjiwi Kimia or TK), PT. Pindo Deli Pulp and Paper Mills (Pindo Deli or PD), and PT. Indah Kiat Pulp & Paper, Tbk. (Indah Kiat or IK) (hereinafter designated as respondents, APP/SMG, or by their individual company names).

On November 3, 2009, the Department issued the questionnaire (including government and company sections) to the Government of Indonesia (GOI). On the same day, the Department also provided a copy of the questionnaire to APP/SMG. On December 29, 2009, APP/SMG and the GOI submitted their questionnaire responses. (*APP/SMG Initial Questionnaire Response* and *GOI Initial Questionnaire Response*) On January 11 and January 14, 2010, the Department received comments from petitioners regarding these questionnaire responses. On January 28 and 29, 2010, the Department issued supplemental questionnaires to APP/SMG and the GOI, respectively (*Supplemental Questionnaire to APP/SMG* and *Supplemental Questionnaire to the GOI*, respectively). Responses to these questionnaires were received on February 16, and 22, 2010, and March 1, 2010 (*APP/SMG Supplemental Questionnaire Response* and *GOI Supplemental Questionnaire Response*). The Department notes that the March 1 questionnaire response was received too late to be considered for this preliminary determination.

On February 16, 2010, petitioners submitted comments for the Department to consider for purposes of the preliminary determination. On February 23, 2010, petitioners submitted additional comments for the Department's consideration. On February 26, 2010, respondents submitted comments for the Department's preliminary determination. However, the most recent comments from petitioners and respondents did not reach the Department in time for sufficient consideration to be given for purposes of the preliminary determination. The Department will therefore consider these submissions in its analysis for the final determination.

On February 17, 2010, the Department issued a memorandum finding that petitioners' original allegation that APP/SMG was uncreditworthy from 2001 to April 2005 was sufficient and timely, and stating that we would cover creditworthiness in our analysis. *See* Memorandum to File from Justin M. Neuman, International Trade Analyst, AD/CVD Operations, Office 6, *Countervailing Duty Investigation of Certain Coated Paper from Indonesia: Allegation of Uncreditworthiness*, dated February 17, 2010 (*Creditworthiness Memorandum*). On that same day, we issued a questionnaire to respondents regarding creditworthiness. Respondents submitted their response on February 22, 2010 (*Creditworthiness Questionnaire Response*).

On December 3, 2009, the Department postponed the preliminary determination until February 20, 2010. However, since February 20, 2010 fell on a Saturday, the Department stated its determination would be issued on the next business day, February 22, 2010. *See Certain Coated Paper from Indonesia: Postponement of Preliminary*

[1] Petitioners in this investigation are Appleton Coated LLC, NewPage Corporation, S.D. Warren Company d/b/a/ Sappi Fine Paper North America, and the United Steel, Paper and Forestry, Rubber, Manufacturing, Energy, Allied Industrial and Service Workers International Union (collectively, petitioners).

*Determination in the Countervailing Duty Investigation*, 74 FR 63391 (December 3, 2010). Subsequently, on February 12, 2010, the Department issued a memorandum revising all case deadlines. As explained in the memorandum from the Deputy Assistant Secretary for Import Administration, the Department exercised its discretion to toll deadlines for the duration of the closure of the Federal Government from February 5 through February 12, 2010. *See* Memorandum to the Record from Ronald Lorentzen, DAS for Import Administration, *Tolling of Administrative Deadlines As a Result of the Government Closure During the Recent Snowstorm*, dated February 12, 2010, a public document on file in the Department's Central Records Unit (CRU) in Room 1117 of the main Department building. Thus, all deadlines in this segment of the proceeding have been extended by seven days. The revised deadline for the preliminary determination of this investigation was February 27, 2010. Since this date fell on a Saturday, the actual signature date is March 1, 2010.

On February 26, 2010, petitioners requested that the final determination of this countervailing duty investigation be aligned with the final determination in the companion antidumping duty investigation in accordance with section 705(a)(1) of the Act.

**Alignment of Final Countervailing Duty Determination With Final Antidumping Duty Determination**

On the same day the Department initiated this countervailing duty investigation, *see Initiation Notice*, the Department also initiated the antidumping duty investigations of certain coated paper from Indonesia and the People's Republic of China (PRC). *See Certain Coated Paper Suitable for High–Quality Print Graphics Using Sheet–Fed Presses From Indonesia and the People's Republic of China: Initiation of Antidumping Duty Investigations*, 74 FR 53710 (October 20, 2009). The countervailing duty investigation and the antidumping duty investigation have the same scope with regard to the merchandise covered. On February 26, 2010, in accordance with section 705(a)(1) of the Act, petitioners requested alignment of the final countervailing duty determination with the final antidumping duty determination of certain coated paper from Indonesia. Therefore, in accordance with section 705(a)(1) of the Act and 19 CFR 351.210(b)(4), we are aligning the final countervailing duty determination with the final antidumping duty determination. Consequently, the final countervailing duty determination will be issued on the same date as the final antidumping duty determination, which is currently scheduled to be issued no later than July 12, 2010, unless postponed.

**Injury Test**

Because Indonesia is a "Subsidies Agreement Country" within the meaning of section 701(b) of the Act, the International Trade Commission (ITC) is required to determine whether imports of the subject merchandise from Indonesia materially injure, or threaten material injury to, a U.S. industry. On November 23, 2009, the ITC published its affirmative preliminary determination that there is a reasonable indication that an industry in the United States is materially injured by reason of imports from the PRC and Indonesia of subject merchandise. *See Certain Coated Paper Suitable for High–Quality Print Graphics Using Sheet–Fed Presses from China and Indonesia*, 74 FR 61174; and USITC Publication 4108 entitled Certain Coated Paper Suitable for High–Quality Print Graphics Using Sheet–Fed Presses from China and Indonesia: Investigation Nos. 701–TA–470–471 and 731–TA–1169–1170 (Preliminary) (November 2009).

**Scope of the Investigation**

The scope of this investigation consists of Coated Paper, which are certain coated paper and paperboard[2] in sheets suitable for high quality print graphics using sheet–fed presses; coated on one or both sides with kaolin (China or other clay), calcium carbonate, titanium dioxide, and/or other inorganic substances; with or without a binder; having a GE brightness level of 80 or higher;[3] weighing not more than 340 grams per square meter; whether gloss grade, satin grade, matte grade, dull grade, or any other grade of finish; whether or not surface–colored, surface–decorated, printed (except as described below), embossed, or perforated; and irrespective of dimensions.

Coated Paper includes: (a) coated free sheet paper and paperboard that meets this scope definition; (b) coated groundwood paper and paperboard produced from bleached chemi–thermo-mechanical pulp ("BCTMP") that meets this scope definition; and (c) any other coated paper and paperboard that meets this scope definition.[4]

Coated Paper is typically (but not exclusively) used for printing multi–colored graphics for catalogues, books, magazines, envelopes, labels and wraps, greeting cards, and other commercial printing applications requiring high quality print graphics.

Specifically excluded from the scope are imports of paper and paperboard printed with final content printed text or graphics.

As of 2009, imports of the subject merchandise are provided for under the following categories of the Harmonized Tariff Schedule of the United States ("HTSUS"): 4810.14.11, 4810.14.1900, 4810.14.2010, 4810.14.2090, 4810.14.5000, 4810.14.6000, 4810.14.70, 4810.19.1100, 4810.19.1900, 4810.19.2010, 4810.19.2090, 4810.22.1000, 4810.22.50, 4810.22.6000, 4810.22.70, 4810.29.1000, 4810.29.5000, 4810.29.6000, 4810.29.70. While HTSUS subheadings are provided for convenience and customs purposes, the written description of the scope of this investigation is dispositive.

The HTSUS subheadings are provided for convenience and customs purposes only, the written description of the scope of this investigation is dispositive.

**Scope Comments**

In accordance with the preamble to the Department's regulations, we set aside a period of time in our *Initiation Notice* for parties to raise issues regarding product coverage, and encouraged all parties to submit comments within 20 calendar days of publication of that notice. *See Antidumping Duties; Countervailing Duties*, 62 FR 27296, 27323 (May 19, 1997), and *Initiation Notice*, 74 FR at 53703. We received comments concerning the scope of the antidumping duty (AD) and countervailing duty (CVD) investigations of coated paper from the PRC and Indonesia.

Timely comments were filed collectively by Gold East Paper (Jiangsu) Co., Ltd., Gold Huasheng Paper Co., Ltd., PD, and TK (collectively, "the scope respondents") on November 6, 2009. These parties asked the Department to clarify the scope of these

[2] "'Paperboard' refers to Coated Paper that is heavier, thicker and more rigid than coated paper which otherwise meets the product description. In the context of Coated Paper, paperboard typically is referred to as 'cover,' to distinguish it from 'text.'"

[3] One of the key measurements of any grade of paper is brightness. Generally speaking, the brighter the paper the better the contrast between the paper and the ink. Brightness is measured using a GE Reflectance Scale, which measures the reflection of light off of a grade of paper. One is the lowest reflection, or what would be given to a totally black grade, and 100 is the brightest measured grade.

[4] As noted below in the "Scope Comments" section, we have determined that the word "paperboard" was inadvertently left out of the sentence in the *Initiation Notice* and have corrected it for the preliminary determination.

investigations by inserting language stating that multi–ply coated paperboard is not covered. According to the scope respondents, multi–ply coated paperboard is not the same as subject coated paper and paperboard. First, the scope respondents claim its end–use is not for graphic printing purposes or as a cover for graphic applications as stated in the petition, but primarily for packaging functions (*e.g.*, cosmetics, cigarettes, *etc.*). Moreover, the physical characteristics of this product and its production process differ from those of subject coated paper. In addition, the scope respondents note the Harmonized Tariff Schedule (HTS) number for multi–ply coated paper products was not included in the scope by petitioners and, thus, it was not their intention to consider this product subject to the investigations. Finally, the scope respondents claim that including multi–ply coated paperboard would call into question the Department's industry standing analysis.

In response to the scope respondents' submission, petitioners submitted comments on November 16, 2009. Petitioners assert the scope provides clear, specific criteria (*e.g.*, sheets, suitable for high quality print graphics, using sheet–fed press, coated, 80 or higher GE brightness level, weight no more than 340 gsm, *etc.*) for determining covered merchandise. Petitioners also point out that neither the petitions nor the initiation documents indicate that plies are a relevant physical characteristic. Furthermore, multi–ply products produced by the scope respondents are suitable for more than a single use. Thus, if the coated paper product, including multi–ply coated paperboard, meets the criteria stated in the scope, the product is subject to these investigations and the arguments provided by the scope respondents (*e.g.*, characteristics, production process, HTS numbers, *etc.*) are immaterial. Finally, petitioners claim that there is no reason to re–examine the analysis conducted at the initiation phase of the investigation regarding petitioners' standing.

On December 16, 2009, the scope respondents requested that the Department revisit its determination regarding industry support. While acknowledging that the deadline had passed, the scope respondents claimed that neither the statute nor the Department's regulations preclude it from extending the deadline and revisiting its industry support determination.

On December 28, 2009, petitioners responded that the statute and Statement of Administrative Action are clear that an industry support determination cannot be reconsidered in the context of the investigation. On February 19, 2010, representatives of the scope respondents met with Department officials to discuss their scope comments. *See* Memorandum to the File from Nancy Decker, regarding "Ex–Parte Meeting with Counsel to Respondents" (March 1, 2010). On February 23, 2010, the scope respondents filed documents and photographs of items presented to the Department at this ex parte meeting. On February 22, 2010, representatives of petitioners met with Department officials to discuss their scope comments. *See* Memorandum to the File from Nancy Decker, regarding "Ex–Parte Meeting with Counsel to Petitioners" (March 1, 2010). On February 23, 2010, petitioners filed a submission in which they included a calculation presented to the Department during this *ex parte* meeting.

On February 25, 2010, petitioners filed additional comments rebutting the documents filed by the scope respondents and restating their prior claims. In response to a question the Department posed during the *ex parte* meeting, petitioners stated that the phrase "suitable for high quality print graphics" could be stricken from the description of the subject merchandise without altering the scope of these investigations.

Based on our review of the scope, we agree with petitioners that the number of plies is not among the specific physical characteristics (*e.g.*, brightness, coated, weight, *etc.*) defining the subject merchandise. Accordingly, we preliminarily find that multi–ply coated paper is covered by the scope of these investigations, to the extent that it meets the description of the merchandise in the scope.

Given that petitioners' most recent submission regarding the suitability language was received shortly before these preliminary determinations, we have not had sufficient time to analyze this issue. Accordingly, we have not amended the scope and we invite parties to further comment with respect to whether the phrase "suitable for high quality print graphics" can be stricken from the description of the subject merchandise without altering the scope of these investigations. These scope comments must be filed within 20 calendar days of publication of this notice, and they must be filed on the record of this investigation, as well as the records of the concurrent AD investigations on coated paper from Indonesia and the PRC and the CVD investigation of coated paper from the PRC.

In their February 25, 2010 submission, petitioners also stated that the phrase in the scope, "(c) any other coated paper that meets the scope definition" should also include the word "paperboard." We agree that the word "paperboard" was inadvertently omitted (*e.g.*, it is already explicitly included in the first sentence of the scope language and in "(b)" of the second paragraph) and have corrected the scope language to read "(c) any other coated paper and paperboard that meets this scope definition."

**Period of Investigation**

The period for which we are measuring subsidies, i.e., the period of investigation (POI), is January 1, 2008 through December 31, 2008.

**Subsidies Valuation Information**

*Cross–Ownership*

The Asia Pulp and Paper Company/Sinar Mas Group is comprised of a group of companies including forestry/logging companies, pulp producers, and paper pro[5]ducers linked by varying degrees of common ownership involving the Widjaja family. The producers/exporters of subject merchandise, TK, PD, and IK, have reported affiliations with each other through a parent holding company, PT. Purinusa Ekapersada (Purinusa); with pulp producer PT. Lontar Papyrus Pulp and Paper Industry (Lontar); with six forestry/logging companies PT. Arara Abadi (AA), PT. Wirakarya Sakti (WKS), PT. Satria Perkasa Agung (SPA), PT. Riau Abadi Lestari (RAL), PT. Finnantara Intiga (FI), and PT. Murini Timber (MT); and with domestic trading company PT. Cakrawala Megah Indah (CMI).

The Department's regulations at 19 CFR 351.525(b)(6)(vi) state that cross–ownership exists between two or more corporations where one corporation can use or direct the individual assets of the other corporation(s) in essentially the same ways it can use its own assets. This section of the Department's regulations states that this standard will normally be met where there is a majority voting ownership interest between two corporations or through common ownership of two (or more) corporations. The Preamble to the Department's regulations further clarifies the Department's cross–ownership standard. *See* Countervailing Duties 63 FR 65347, 65401 (*CVD Preamble*). According to the *CVD Preamble*, relationships captured by the

[5] We note that respondent company IK is also a pulp producer and supplier, in addition to being a producer of the subject merchandise.

cross-ownership definition include those where the interests of two corporations have merged to such a degree that one corporation can use or direct the individual assets (including subsidy benefits) of the other corporation in essentially the same way it can use its own assets (including subsidy benefits). The cross–ownership standard does not require one corporation to own 100 percent of the other corporation. In certain circumstances, a large minority voting interest (for example, 40 percent) or a "golden share" may also result in cross–ownership. *See CVD Preamble* at 65401.

As such, the Department's regulations make it clear that we must examine the facts presented in each case in order to determine whether cross–ownership exists. If we find that cross–ownership exists and if one or more of the relationships identified in 19 CFR 351.525(b)(6)(i) - (v) exists, we treat all cross–owned companies, to which at least one of those relationships apply, as one company, and calculate a single rate for any countervailable subsidies that we identify and measure, in accordance with 19 CFR 351.525(b)(6).

Further, in accordance with 19 CFR 351.525(b)(6)(iv), if the Department determines that the suppliers of inputs primarily dedicated to the production of the downstream product are cross–owned with the producers/exporters under investigation, then the Department will treat subsidies provided to the input producers as subsidies attributable to the production of the downstream product.

In this investigation, we are examining whether the three producers/exporters of the subject merchandise, TK, PD, and IK, are cross–owned with one another, and with their input suppliers, as outlined in 19 CFR 351.352(b)(6)(iv). The alleged subsidies pertaining to stumpage that we are investigating are conferred on the forestry/logging companies which harvest standing timber and sell pulpwood to the pulp producers that supply pulp to the paper producers/exporters. Therefore, we must examine whether cross–ownership exists among and across the suppliers of pulpwood, the pulp producers, and the CCP producers/exporters.

Based on information on the record, we preliminarily determine that cross–ownership exists, in accordance with 19 CFR 351.525(b)(6)(vi), among and across the following companies involved in the production and sale of the subject merchandise: respondent paper producers/exporters, TK, PD, and IK; pulp producers, Lontar and IK; forestry and logging companies, AA, WKS, RAL, SPA, FI, and MT; and domestic trading company, CMI. In addition, we find that the input products in question, pulp logs, are primarily dedicated to the production of CCP in accordance with 19 CFR 351.525(b)(6)(iv).

Since much of our analysis supporting our finding on cross–ownership involves business proprietary information, a full discussion of the bases for our preliminary determination is set forth in the Memorandum to Barbara E. Tillman, Director, AD/CVD Operations, Office 6, from Myrna Lobo, International Trade Compliance Analyst, *Countervailing Duty Investigation: Certain Coated Paper from Indonesia - Cross–Ownership*, dated March 1, 2010 (*Cross–Ownership Memorandum*), a public version of which is on file in the CRU.

In addition to the six cross–owned forestry/logging companies identified above, APP/SMG reported ten additional forestry/logging companies from whom material quantities of timber were purchased during the POI and with whom APP/SMG entered into cooperation agreements. However, APP/SMG has reported that it has no affiliation with these companies other than a business arrangement. Accordingly, we preliminarily determine that these companies are not cross–owned with APP/SMG, but will continue examining this issue during the course of this investigation.

*Allocation Period*

Under 19 CFR 351.524(d)(2)(i), we presume the allocation period for non–recurring subsidies to be the average useful life (AUL) prescribed by the Internal Revenue Service (IRS) for renewable physical assets of the industry under consideration (as listed in the IRS's 1977 Class Life Asset Depreciation Range System, and as updated by the Department of the Treasury). This presumption will apply unless a party claims and establishes that these tables do not reasonably reflect the AUL of the renewable physical assets of the company or industry under investigation. Specifically, the party must establish that the difference between the AUL from the tables and the company–specific AUL or country–wide AUL for the industry under investigation is significant, pursuant to 19 CFR 351.524(d)(2)(i) and (ii). For assets used to manufacture certain coated paper, the IRS tables prescribe an AUL of 13 years. Neither APP/SMG nor the GOI has disputed the AUL of 13 years in this investigation. Therefore, the Department is using an AUL of 13 years in this investigation.

*Creditworthiness*

In its petition, petitioners included an allegation that APP/SMG was uncreditworthy from 2001 through April 2005.[6] As the basis for its allegation, petitioners relied on an earlier Department determination of uncreditworthiness for the same years with respect to APP/SMG. *See Coated Free Sheet Paper from Indonesia: Final Affirmative Countervailing Duty Determination*, 72 FR 60642 (October 25, 2007) (*Indonesia CFS Final Determination*) and the accompanying Issues and Decision Memorandum (*CFS IDM*) at 16.[7] In the CFS investigation, the Department examined the following factors in determining the creditworthiness of APP/SMG: (1) the receipt by respondent companies of commercial long–term loans (as stated in 19 CFR 351.505(a)(4)(i)(A)); and (2) respondent companies' recent past and present ability to meet their costs and fixed financial obligations with their cash flow (as stated in 19 CFR 351.505(a)(4)(i)(C)). Based on this analysis, we found APP/SMG to be uncreditworthy from 2001 through April 2005. *See* Memorandum to File from Barbara E. Tillman, Director, Office 6, AD/CVD Operations, *Countervailing Duty Investigation: Coated Free Sheet Paper from Indonesia: Post–Preliminary Analysis of Two New Subsidy Allegations*, dated September 7, 2007 (*Indonesia CFS Post–Preliminary*

[6] Although the Department did not address this allegation in the Initiation Checklist (*See Countervailing Duty Investigation Initiation Checklist: Certain Coated Paper from Indonesia*, 74 FR 53707 (October 20, 2009) (*Initiation Checklist*), we subsequently issued a memorandum confirming that this was a timely and sufficient allegation of uncreditworthiness which we would be examining during the course of the investigation. *See Creditworthiness Memorandum*.

[7] In the coated free sheet paper investigation (hereinafter referred to as the CFS investigation or CFS), APP/SMG was also the sole respondent, and all of the used programs examined in the CFS investigation were alleged in the current investigation of CCP. The POI in CFS was calendar year 2005. Because the programs and company in this investigation mirror the programs and company under investigation in CFS, we requested that the GOI and APP/SMG place on the record of this investigation the following documents from the CFS investigation: all verification reports as well as certain verification exhibits (on the record as Exhibits 32-33 of GOI Initial Questionnaire Response, dated December 29, 2009 and Exhibits 2-9 of *APP/SMG Supplemental Questionnaire Response*, dated February 16, 2010); business proprietary memoranda pertaining to cross-ownership and the subsidy calculations, including benchmarks (on the record as Exhibit 65 of *APP/SMG Initial Questionnaire Response*, dated December 29, 2009 and Exhibit 1 of *APP/SMG Supplemental Questionnaire Response*, dated February 16, 2010). Where appropriate and necessary, we have relied on these documents as well as all of the other information in the GOI's questionnaire responses to reach this preliminary determination.

*Analysis Memorandum*), on this record as Exhibit 14 of Petition Volume V, dated September 23, 2007; unchanged in *Indonesia CFS Final Determination*.

In March 2001, APP/SMG declared a standstill on its obligations (principal and interest) to its creditors. *See Indonesia CFS Final Determination* and *CFS IDM* at 16. APP/SMG began negotiating with its creditors to restructure its debt; however, the "Master Restructuring Agreements" (MRAs), which finalized the debt restructuring, did not go into effect until April 2005. *See id.* at 16. In the time between the announcement of the debt standstill and the effective date of the MRAs, none of the four Principal Indonesian Operating Companies (PIOCs) in the APP/SMG group (IK, Lontar, TK, and PD) made any payment of principal or interest on their multi–billion dollar debt obligations except for a $90 million payment that was made to repay a portion of IK's debt in June 2002. *See id.* at 16. Additionally, none of the PIOCs were able to secure long–term loans during this time period due to the debt standstill and the ongoing debt restructuring discussions with their creditors. *See id.* at 16.

In *Indonesia CFS Final Determination*, due to their inability to meet their debt payments and financial obligations in accordance with 19 CFR 351.505(a)(4)(i)(D) or to obtain any long–term loans in accordance with 19 CFR 351.505(a)(4)(i)(A) during this time period, we found that companies in the APP/SMG group were uncreditworthy at the time the government forgave debt through the acceptance of Certificates of Entitlement (COEs) as debt repayment and at the time the GOI forgave debt through the sale of APP/SMG's debt to Orleans Offshore Investment Limited (Orleans). *See Indonesia CFS Final Determination* and *CFS IDM* at 16. *See also Indonesia CFS Post–Preliminary Analysis Memorandum* at 13–14.

In the instant investigation, we issued a supplemental questionnaire regarding the issue of creditworthiness to APP/SMG on February 17, 2010. In that questionnaire, we instructed APP/SMG that, if it disagreed with our determination in *Indonesia CFS Final Determination*, it should respond to a series of questions in the questionnaire so that the Department could conduct a meaningful analysis of any information APP/SMG presented regarding its creditworthiness status from 2001 to April 2005. In response to this questionnaire, APP/SMG stated that it would not contest the Department's previous determination of APP/SMG's creditworthiness status in *Indonesia CFS Final Determination. See Creditworthiness Questionnaire Response* at 2.

Therefore, we are continuing to find that APP/SMG was uncreditworthy from 2001 through April 2005. Therefore, in accordance with the methodology described in 19 CFR 351.505(a)(3)(iii), a risk premium has been included in the discount rate used to calculate the debt forgiveness benefits for both the "Debt Forgiveness through the Indonesian Government's Acceptance of Financial Instruments with No Market Value" and the "Debt Forgiveness through APP/SMG's Buyback of Its Own Debt from the Indonesian Government" programs.

**Analysis of Programs**

*I. Programs Preliminarily Determined To Be Countervailable*

*A. Provision of Standing Timber for Less Than Adequate Remuneration*

Petitioners alleged that the GOI provides a countervailable subsidy to pulp and paper producers through the provision of standing timber for less than adequate remuneration. As support for their allegation, they relied on *Indonesia CFS Final Determination*. In *Indonesia CFS Final Determination*, the Department found that the "provision of standing timber" (also referred to as stumpage) by the GOI was countervailable because the provision: (1) provided a financial contribution under section 771(5)(D)(iii) of the Act (provision of goods or services other than general infrastructure); (2) provided a benefit under section 771(5)(E)(iv) of the Act (goods or services are provided for less than adequate remuneration); and (3) was specific under section 771(5A)(D)(iii) of the Act (limited to a group of industries).

In the CFS investigation, the GOI reported that virtually all harvestable forest land is owned by the GOI. *See Indonesia CFS Final Determination* and *CFS IDM* at 18. We found that the GOI allows timber to be harvested from government–owned land under two main types of licenses: (1) HPH licenses to harvest timber in the natural forest; and (2) HTI licenses to establish and harvest timber from plantations. HTI license holders pay "cash stumpage fees" known as PSDH royalty fees, which are paid per unit of timber harvested. In addition to paying PSDH fees, HPH license holders pay a per–unit Rehabilitation Fee (dana reboisasi or DR) for timber harvested from natural forests. License holders in Jambi province also pay a PSDA fee for harvest from plantations. *See id.* at 18. We also found that all of the stumpage fees are administratively set by the GOI. *See id.* at 69.

In the November 3, 2009 questionnaire issued by the Department, we asked the GOI and APP/SMG to provide any new information or evidence of changed circumstances with respect to the administration of this program since December 2005 (the end of the POI in the Indonesia CFS Final Determination) that would warrant a reconsideration of the Department's prior countervailability finding that the GOI provided standing timber for less than adequate remuneration to a specific group of industries. *See Certain Pasta from Italy: Final Results of the Seventh Countervailing Duty Administrative Review*, 69 FR 70657 (Dec. 7, 2004), and the accompanying Issues and Decision Memorandum at Comment 2 ("It is the Department's practice not to revisit past findings unless new factual information or evidence of changed circumstances has been placed on the record of the proceeding that would cause the Department to deviate from past practice."); *see also PPG Industries, Inc. v. United States*, 14 C.I.T. 522, 539–40 (1990) (upholding the Department's determination not to reinvestigate program absent sufficient new evidence). The GOI reported that several laws and decrees have been issued since December 2005 which have affected the forest industry. *See GOI Initial Questionnaire Response*, dated December 29, 2009 at 7–8. However, none of these changes materially alter the procedures through which the GOI provides standing timber or how it prices standing timber. The GOI did not provide any updated information on the quantity of forest land owned by the government; however, the GOI did report that the harvest from private land was 2,007,156 $m^3$ of a total of 31,984,443 $m^3$ (or only 6.27 percent) of the total harvest during the POI. *See GOI Initial Questionnaire Response*, dated December 29, 2009 at 18. Therefore, we preliminarily determine that the provision of standing timber by the GOI constitutes a financial contribution in accordance with section 771(5)(D)(iii) of the Act.

In addition, in a letter dated February 4, 2010, the Department requested that the GOI provide information on the number of industries to which it provided standing timber during the POI, as well as the total number of industries in Indonesia. Information provided by the GOI indicates the government recognizes 23 industry categories. Of these 23 categories, standing timber was provided by the GOI to five industries during the POI,

including the paper industry. *See GOI Supplemental Questionnaire Response*, dated February 22, 2010 at 40. As such, we preliminarily determine that the provision of stumpage is specific in accordance with section 771(5A)(D)(iii) of the Act, because it is limited to a group of industries.

The provision of standing timber provides a benefit as described in section 771(5)(E)(iv) of the Act, to the extent that the GOI received less than adequate remuneration, when measured against a market benchmark for stumpage. The Department's regulations at 19 CFR 351.511(a)(2) set forth the basis for identifying benchmarks to determine whether a government good or service is provided for less than adequate remuneration. These potential benchmarks are listed in hierarchical order by preference: (1) market prices from actual transactions within the country under investigation; (2) world market prices that would be available to purchasers in the country under investigation; or (3) an assessment of whether the government price is consistent with market principles. This hierarchy reflects a logical preference for achieving the objectives of the statute. The most direct means of determining whether the government required adequate remuneration is by comparison with private transactions for a comparable good or service in the country. Thus, the preferred benchmark in the hierarchy is an observed market price for the good, in the country under investigation, from a private supplier (or, in some cases, from a competitive government auction) located either within the country or outside the country (the latter transaction would be in the form of an import). This is because such prices generally would be expected to reflect most closely the commercial environment of the purchaser under investigation.

In accordance with the first preference in the hierarchy, to determine the existence and extent of the benefit, we would need to identify an observed market stumpage price from a private supplier in Indonesia. As noted above, the GOI reported private forests accounted for only 6.27 percent of the total harvest in 2008 (2,007,156 $m^3$ of a total of 31,984,443 $m^3$). *See GOI Initial Questionnaire Response*, dated December 29, 2009 at 18 and Exhibit 27. Additionally, in *Indonesia CFS Final Determination*, the Department found that there were only 233,811 hectares of private forest land out of 57 million hectares in Indonesia. *See Indonesia CFS Final Determination* and *CFS IDM* at 18. The GOI did not provide any updated information on the percentage of government ownership of forest land. Thus, the GOI clearly plays a predominant role in the market for standing timber. As such, we preliminarily determine that there are no market–determined stumpage fees in Indonesia upon which to base a "first tier" benchmark. Furthermore, because standing timber cannot be imported, there are no actual stumpage import prices to consider. This is consistent with our finding in *Indonesia CFS Final Determination*.

A "second tier" benchmark, according to the regulations, relies on world market prices that would be available to the purchasers in the country in question, though not necessarily reflecting prices of actual transactions involving the particular producer. In selecting a world market price under this second approach, the Department examines the facts on the record regarding the nature and scope of the market for that good to determine if that market price would be available to an in–country purchaser. As discussed in the *CVD Preamble*, the Department will consider whether the market conditions in the country are such that it is reasonable to conclude that a purchaser in the country could obtain the good or service on the world market. For example, a European price for electricity normally would not be an acceptable comparison price for electricity provided by a Latin American government, because electricity from Europe in all likelihood would not be available to consumers in Latin America. However, as another example, the world market price for commodity products, such as certain metals and ores, or for certain industrial and electronic goods commonly traded across borders, could be an acceptable comparison price for a government–provided good, provided that it is reasonable to conclude from record evidence that the purchaser would have access to such internationally traded goods. *See CVD Preamble* at 65377. There are no world market prices for stumpage that we could use because standing timber cannot be traded across borders; only the logs produced from the standing timber can be traded. Thus, we cannot apply a "second tier" benchmark.

Since we are not able to conduct our analysis under the "second tier" of the regulations, consistent with the hierarchy, we are preliminarily measuring the adequacy of remuneration by assessing whether the government price is consistent with market principles (*i.e.*, the "third tier" as described in the Department's regulations). This approach is set forth in 19 CFR 351.511(a)(2)(iii) and is explained further in the *CVD Preamble* at 65378: "Where the government is the sole provider of a good or service, and there are no world market prices available or accessible to the purchaser, we will assess whether the government price was set in accordance with market principles through an analysis of such factors as the government's price–setting philosophy, costs (including rates of return sufficient to ensure future operations), or possible price discrimination." The regulations do not specify how the Department is to conduct such a market principles analysis. By its nature, the analysis depends upon available information concerning the market sector at issue and, therefore, must be developed on a case–by-case basis.

The GOI has not provided information or documentation to demonstrate that the stumpage fees it charges are established in accordance with market principles. Although the PSDH fees are established as a percentage of the reference price of logs, we cannot conclude that the log reference price is reflective of market principles or is a market–determined price. The GOI reported that the reference price is normally determined by a weighted–average of both the Indonesian domestic and export prices for logs. However, since a log export ban is in place (see further discussion below), the reference price is currently determined solely from domestic prices. Through its ownership of virtually all of Indonesia's harvestable forests, the GOI has almost complete control over access to the timber supply. In addition, the ban on the export of logs affects the price for logs. As such, the reference prices for logs cannot be considered to be market–based. Furthermore, the percentage that is applied to the reference price to calculate the PSDH fees is administratively set by the GOI. Thus, we preliminarily determine that the stumpage fees, charged by the GOI as a percentage of a non–market-determined reference price, are not based on market principles.

Since the government price is not set in accordance with market principles, we looked for an appropriate proxy to determine a market–based stumpage benchmark. It is generally accepted that the market value of timber is derivative of the value of the downstream products. The species, dimension, and growing condition of a tree largely determine the downstream products that can be produced from a tree; the value of a standing tree is derived from the demand for logs produced from that tree and the demand for logs is, in turn,

derived from the demand for the products produced from those logs. *See, e.g., Notice of Final Results of Countervailing Duty Administrative Review and Rescission of Certain Company–Specific Reviews: Certain Softwood Lumber Products from Canada*, 69 FR 75917 (December 20, 2004), and the accompanying Issues and Decision Memorandum at 16–18.

Both petitioners and respondents have made recommendations for the appropriate basis for calculating benchmark prices. Petitioners have placed Malaysian export prices for acacia pulpwood and mixed tropical hardwood (MTH) pulpwood from the World Trade Atlas (WTA) on the record of this review. *See* Petition Volume V, dated September 23, 2009 at Exhibit 11. The Department used WTA export prices as the basis for its benchmark price in *Indonesia CFS Final Determination*.

Respondents provided a number of alternatives to the WTA data. *See APP/SMG Initial Questionnaire Response*, dated December 29, 2009 at 34–41. These include: (1) pulpwood exports from the Malaysian state of Sabah collected by an industrial consultant; (2) specific transactions of Malaysian acacia exports to Indonesia; (3) export data from the Sabah Forestry Department; (4) pulpwood prices in the U.S. published in World Resources Quarterly (WRQ); (5) pulpwood prices in Chile and Russia published in WRQ; and (6) global pulpwood prices published in WRQ.

For the purposes of this preliminary determination, the Department finds that a species–specific benchmark is the most appropriate basis for calculating a stumpage benefit. Based on the information provided by both the GOI and APP/SMG, stumpage fees are assessed on a species–specific basis. For example, acacia, MTH, and meranti logs are all assessed different PSDH fees. *See APP/SMG Initial Questionnaire Response*, dated December 29, 2009 at 29. This is consistent with the Department's finding in the CFS investigation. *See Indonesia CFS Final Determination* and *CFS IDM* at 22.

In reviewing the benchmark alternatives suggested, the data from the Sabah Forestry Department and the WRQ are not species specific. Therefore, we are not using data from these sources as the basis of our benchmark. We also are not using individual transaction prices for pulpwood between a Malaysian exporter and an Indonesian importer as a starting point. First, these individual transactions were self–selected by respondents. In addition, because the GOI dominates the Indonesian stumpage market and because stumpage and pulpwood markets are inextricably intertwined, we find it inappropriate to use import prices into Indonesia for pulpwood as a starting point to determine whether Indonesian stumpage prices reflect market prices. Finally, although the Sabah pulpwood export data provided by the industrial consultant are species specific, we do not find them preferable to the Malaysian export statistics because: (1) they were prepared for purposes of this investigation; and (2) they cannot be checked against any official export data, including data from the Sabah Forestry Department, which is not presented on a species–specific basis.

As a result of the geographic proximity and the similarities of forest conditions, climate, and tree species between Indonesia and Malaysia, we preliminarily determine that Malaysian pulp log export prices as reported in the WTA are the most appropriate source to use in our analysis. We have relied on these export prices to derive a market–based stumpage benchmark, which we have compared to GOI stumpage fees in order to determine whether the GOI is providing standing timber for less than adequate remuneration. To calculate the benchmark, where possible we have removed exports to Indonesia from these statistics. As discussed above, we find that it is not appropriate to use imports into Indonesia as a benchmark source. However, for one of the species, the only exports in the Malaysian statistics are exports to Indonesia. Therefore, for purposes of this preliminary determination, we are using the statistics for this species to calculate the benchmark. However, we will further evaluate this approach for the final determination and we intend to gather additional information with respect to a benchmark source that does not reflect prices into Indonesia.

Respondents have argued that, if the Department does use export prices from either Malaysia or Sabah, a deduction for export royalty payments must be made from the benchmark price. Respondents argue that these payments are reflected in the export prices and therefore should be deducted to calculate an accurate benchmark. We do not necessarily agree with respondents that such royalty fees should be deducted from the starting price, but we need not reach that issue in this preliminary determination. While respondents have provided information that export royalty payments are to be collected on log exports from Malaysia, they have not provided any evidence on the record for this investigation demonstrating that these royalties are reflected in the values reported in the export statistics of Malaysia. Furthermore, the Malaysian transactions of acacia pulp logs exported to Indonesia, placed on the record by respondents, do not include export royalty payments. According to respondents, timber harvested from private village territory in Malaysia is not subject to an export royalty. *See APP/SMG Supplemental Questionnaire Response*, dated February 16, 2010 at 12. Therefore, we are not making any deductions from the export values for export royalty payments.

After removing exports to Indonesia from the statistics, where possible, we have calculated four unit values: one for acacia pulp logs; one for MTH chipwood; one for eucalyptus; and one for logs (timber over 30 cm in diameter). We have also adjusted the Malaysian export log prices to remove the Indonesian costs of extraction (harvesting) of the standing timber. To determine the Indonesian harvesting costs (including a reasonable amount for profit associated with extraction), we used information contained in "Addicted to Rent: Corporate and Spatial Distribution of Forest Resources in Indonesia; Implications of Forest Sustainability and Government Policy." *See* Petition Volume V, dated September 23, 2009, Exhibit 9. This study provides the only independent source on the record that specifies extraction costs and profit in Indonesia. The amounts in this report are $17 for extraction costs and $5 for profit in connection with extraction.

Respondents have argued that the Department could use the forestry/logging companies' reported actual costs for harvesting to adjust the Malaysian log export prices. However, for purposes of this preliminary determination, we have decided not to use these actual costs. We may consider using these actual costs for the final determination if the GOI can demonstrate: that it has a system in place to evaluate exactly which costs are legitimately considered to be harvesting and extraction costs, that it has evaluated how to distinguish the types of costs relevant to harvesting from plantations versus the natural forest, and that it has a system in place to distinguish the costs of extraction from plantations versus other plantation development and maintenance costs.

The deduction of the harvesting costs, and profit associated with harvesting, from the unit values results in a derived benchmark stumpage price for each species. We compared these derived benchmark prices for each type or species of standing timber to the Indonesian stumpage fees and found the

GOI's stumpage fees to be lower than the market benchmark prices. Accordingly, we preliminarily determine that a benefit is provided in accordance with section 771(5)(E)(iv) of the Act because the GOI provides standing timber for less than adequate remuneration.

To calculate the benefit received under this program, we first multiplied the benchmark prices for each type of timber by the appropriate harvest quantity. According to the questionnaire responses, the GOI charges PSDH and DR fees on both a cubic meter and metric ton basis, depending on the species. *See APP/SMG Initial Questionnaire Response*, dated December 29, 2009 at 29. The quantities of pulp log exports from Malaysia that are associated with the total value of exports from Malaysia are reported by the WTA in cubic meters. Thus, the per cubic meter export price is the starting point for our benchmark calculation. Therefore, to calculate the benefit, the Department must convert from metric tons to cubic meters on a consistent basis.

In *Indonesia CFS Final Determination*, where necessary, the Department converted harvest and purchase quantities using the conversion factor in a report of the Food and Agriculture Organization of the United Nation (FAO) to convert metric tons to cubic meters. The Department found that the FAO conversion factor for tropical pulpwood (1 metric ton to 1.33 cubic meters) was the most appropriate conversion factor to apply.

In its questionnaire response, APP/SMG provided a set of conversion factors developed through a research project authorized by the Ministry of Forestry. *See APP/SMG Initial Questionnaire Response*, dated December 29, 2009 at Exhibit 61. These factors were based on a field study conducted by the Study Team of the Center for Research and Development of Forest Products (hereinafter referred to as field study). In this study, smaller diameter logs of acacia that are grown and harvested on plantations were evaluated. The GOI argues that, based on this study, the more accurate conversion factor for metric tons to cubic meters for smaller diameter acacia is 1.0.

The Department preliminarily finds that the conversion factors developed in the study by the Ministry of Forestry provide a more appropriate basis for the conversion factors for the acacia species harvested by APP/SMG. Based on the information currently on the record, this study appears to be an objective field study of actual conditions in Indonesia. Furthermore, it was not developed for purposes of this investigation. While the Department is using this conversion factor for acacia in the preliminary determination, we do have some concerns regarding this factor. We intend to solicit additional information from the GOI about the purpose of the study and any parameters the GOI set for the study team. Further, the GOI and/or APP/SMG will need to demonstrate that this conversion factor is applicable to the acacia entering the APP/SMG inventory.

We recognize that, in addition to acacia conversion factors, this study also contains conversion factors for multiple species of eucalyptus. However, we are unable to establish, based on record information, which species of eucalyptus APP/SMG harvested. Therefore, for the purposes of this preliminary determination, we have used the conversion factors in the FAO report, where appropriate, for eucalyptus. We will collect additional information regarding the eucalyptus conversion factor for the final determination. If we find that the data in the study is reliable and that there is a conversion factor applicable to the eucalyptus entering the APP/SMG inventory, we will consider using one of the Ministry of Forest's conversion factors for eucalyptus in the final determination.

The field study does not address MTH chipwood and logs (over 30 cm in diameter); therefore, for MTH chipwood and logs (over 30 cm in diameter), the Department has used the conversion factors in the FAO report in this preliminary determination.

To calculate the benefit conferred through stumpage fees charges for acacia, we multiplied each benchmark price by the sum of each forestry company's acacia harvest during the POI. To calculate the benefit conferred through stumpage fees charged for MTH chipwood, we multiplied the benchmark price by the sum of each forestry company's MTH chipwood timber harvest during the POI. To calculate the benefit conferred through stumpage fees charged for eucalyptus, we multiplied the benchmark price by the sum of each forestry company's eucalyptus timber harvest during the POI.

In determining the benefit for logs (i.e., harvested timber over 30 cm in diameter that was sold to the APP/SMG pulp producers for pulp production), the Department is using the volume of logs sold by IK and Lontar as the quantity for which to measure the benefit. We are using log sales to the APP/SMG pulp producers rather than total harvest quantity because we are only capturing in our calculation benefits attributable to the pulp and paper production of the APP/SMG pulp and paper producers.

After multiplying each stumpage benchmark by the appropriate harvest quantities, we summed all the values to calculate the total amount of fees that should have been paid at the market–based benchmark stumpage rate. We then subtracted the total of the actual PSDH and DR fees, plus the PSDA fees, paid by the APP/SMG forestry companies during the POI, from the total amount of stumpage fees that should have been paid.

We then divided the benefit by the total external sales of the APP/SMG pulp and paper producers, including external sales made through CMI, respondents' affiliated reseller and trading company (*i.e.*, the total FOB sales values of the pulp and paper producers minus any cross–owned inter–company sales) to calculate a net countervailable subsidy rate of 10.30 percent *ad valorem* for this program. *See* Memorandum to the File from Nicholas Czajkowski, International Trade Analyst, *Calculations for the Preliminary Determination of Certain Coated Paper from Indonesia*, dated concurrently with this notice (*CCP Preliminary Calculation Memorandum*).

*B. Government Prohibition of Log Exports*

Petitioners alleged that the GOI provides a countervailable subsidy to pulp and paper producers through the GOI's ban on log exports. As support for their allegation, they relied on *Indonesia CFS Final Determination* in which the Department found that the GOI's imposition of a log export ban on logs and chipwood provided a countervailable subsidy to downstream wood processing industries, including the pulp and paper producing industries. *See Indonesia CFS Final Determination* and *CFS IDM* at 32.

In CFS, the Department determined that the log export ban provided a financial contribution in accordance with sections 771(5)(B)(iii) and 771(5)(D)(iii) of the Act. Specifically, the Department found that the GOI, through the log export ban, entrusted or directed forestry/harvesting companies to provide lower price inputs (logs and chipwood) to companies in the pulp and paper producing industries. The Department determined that the log export ban provided a benefit in accordance with section 771(5)(E)(iv) of the Act. Specifically, the GOI's log export ban allowed the forestry companies in the APP/SMG group to

purchase inputs (logs and chipwood) from unaffiliated forestry companies below market log prices.

Finally, the Department determined that the log export ban was specific under section 771(5A)(D)(i) of the Act. Specifically, the Department found the GOI's decree banning the exports of logs and chipwood to be *de jure* specific within the meaning of section 771(5A)(D)(i) of the Act, since it is restricted by law to only a limited group of industries and because it covers only a small number of products within each of these seven industries.

In the November 3, 2009 questionnaire issued by the Department, we asked the GOI and APP/SMG to provide any new information or evidence of changed circumstances with respect to the administration of this program that would warrant a reconsideration of the Department's prior countervailability finding regarding the log export ban. In their questionnaire responses for the current investigation, both the GOI and APP/SMG have objected to the Department's finding in CFS. The GOI and APP/SMG state that the World Trade Organization (WTO) has ruled that this type of government action cannot constitute a subsidy program. *See* WT/DS 194 United States -- Measures Treating Export Restraints As Subsidies (adopted by WTO DSB August 23, 2001). Our finding here and our countervailing duty law are consistent with our WTO commitments. Moreover, as discussed in CFS, WTO panel reports are not binding on the United States and do "not have any power to change U.S. law or to order such a change." *See* Statement of Administrative Action (SAA) accompanying the Uruguay Round Agreements Act, H.R. Doc. 103–316, Vol. 1 at 659. *See also Indonesia CFS Final Determination* and *CFS IDM* at 97. The Department is obligated to follow U.S. law in reaching its countervailing duty determinations, and, as discussed below, the GOI's log export ban constitutes a countervailable subsidy under U.S. law. In its questionnaire response, the GOI also reported that it has begun the process of legalizing the export of forest products. See GOI Initial Questionnaire Response, dated December 29, 2009 at Exhibit 8, "Government Regulation No.6 of 2007." While the GOI may have begun the process legalizing exports of certain forest products, the GOI confirmed that a ban on the exportation of logs was still in effect during the POI of this investigation. *See id.* at 25.

As explained in Indonesia *CFS Final Determination*, one of the purposes of the GOI's ban was to develop the downstream industries, which was a basis on which the Department determined that the GOI entrusts or directs domestic log suppliers to sell logs at suppressed prices to domestic consumers, thus providing a good to pulp and paper producers for less than adequate remuneration. *See Indonesia CFS Final Determination* and *CFS IDM* at 27. Neither the GOI nor APP/SMG has placed any additional information on the record that causes us to reconsider our prior finding. As such, we preliminarily determine that the log export ban continues to provide a countervailable subsidy to pulp and paper producers. The ban constitutes a financial contribution in accordance with sections 771(5)(B)(iii) and 771(5)(D)(iii) of the Act through the GOI's entrustment or direction of forestry/harvesting companies to provide goods (*i.e.*, logs and chipwood). It provides a benefit in accordance with section 771(5)(E)(iv) of the Act to the extent that the prices paid by APP/SMG to unaffiliated forestry/harvesting companies for its purchases of logs and chipwood are less than the benchmark price. Our benefit analysis is discussed in detail below. Furthermore, the log export ban is *de facto* specific pursuant to section 771(5A)(D)(iii)(I) of the Act because the industries receiving subsidies from the operation of the ban are limited in number.

To determine whether the log export ban provided a benefit to APP/SMG during the POI, the Department compared the price paid by APP/SMG for the logs it purchased during the POI from unaffiliated forestry/harvesting companies to a benchmark price based on the criteria stipulated in 19 CFR 351.511(a)(2).

The Department's regulations at 19 CFR 351.511(a)(2) set forth the basis for identifying comparative benchmarks for determining whether a government good or service is provided for less than adequate remuneration. These potential benchmarks are listed in hierarchical order by preference: (1) market prices from actual transactions within the country under investigation; (2) world market prices that would be available to purchasers in the country under investigation; or (3) an assessment of whether the government price is consistent with market principles. This hierarchy reflects a logical preference for achieving the objectives of the statute. The most direct means of determining whether the government required adequate remuneration is by comparison with private transactions for a comparable good or service in the country. Thus, the preferred benchmark in the hierarchy is an observed market price for the good, in the country under investigation, from a private supplier (or, in some cases, from a competitive government auction) located either within the country, or outside the country (the latter transaction would be in the form of an import). This is because such prices generally would be expected to reflect most closely the commercial environment of the purchaser under investigation.

In the instant case, there are no meaningful or usable private domestic prices for logs or actual import prices to evaluate for purposes of identifying a "first tier" benchmark (*i.e.*, market prices from actual transactions within the country under investigation). As discussed above, the GOI did not place any updated information on the record concerning the fact that the GOI owns 99 percent of the harvestable forest land in Indonesia. *See Indonesia CFS Final Determination* and *CFS IDM* at 18. Furthermore, the GOI reported that the harvest from privately owned forest lands is 2,007,156 $m^3$ out of a total of 31,984,443 $m^3$ (or only 6.27 percent) of the total harvest. *See GOI Initial Questionnaire Response*, dated December 29, 2009 at 18. We also note that all logs, including logs harvested from private land, are subject to the export ban. Therefore, because of the GOI's predominant role in the Indonesian market for logs, we find that it is not possible to determine a private domestic log benchmark price in Indonesia, pursuant to 19 CFR 351.511(a)(2)(i), for the GOI's log export ban. Accordingly, Indonesian import prices likewise would not reflect market prices.

Because there are no market prices from actual transactions in the country to use as a benchmark, we next looked for a "second tier" benchmark which, according to the regulations, relies on world market prices that would be available to the purchasers in the country in question, though not necessarily reflecting prices of actual transactions involving that particular producer. In selecting a world market price under this second approach, the Department examines the facts on the record regarding the nature and scope of the market for that good to determine if that market price would be available to an in–country purchaser. The Department finds that the public export statistics of Malaysian pulpwood reported in the World Trade Atlas are reliable for establishing a benchmark under the "second tier" as a world market price that would be available in Indonesia.

As we noted in CFS, Indonesia and Malaysia share the same geographic

proximity and similarities of forest conditions, climate, and tree species. *See Indonesia CFS Final Determination* and *CFS IDM* at 20. During the POI, both pulpwood and logs were exported from Malaysia to a number of countries. Accordingly, we have selected as our "second tier" benchmark species–specific Malaysian export prices, as published in the World Trade Atlas, as representative of market–determined prices for pulpwood and logs. Although respondents submitted a number of alternative sources for pulpwood prices (*see* discussion above in the "Provision of Standing Timber for Less than Adequate Remuneration" section), we do not find these alternative benchmark sources to be appropriate to establish a world market price because they are not species specific, and the prices reported by APP/SMG for its purchases of logs from unaffiliated forestry/harvesting companies appear to be species specific. The other reasons why the Department is not using the proposed alternative benchmark sources are discussed in the "Provision of Standing Timber for Less than Adequate Remuneration" section above.

Therefore, we are using the species–specific Malaysian export statistics as the starting point for calculating the benchmark price for pulpwood and logs. For the reasons discussed above, where appropriate, we are deducting from these statistics exports to Indonesia. *See CCP Preliminary Calculation Memorandum*. However, we will further evaluate this approach for the final determination and we intend to gather additional information with respect to a benchmark source that does not reflect prices into Indonesia. We also note that under the Department's regulations, applicable ocean and inland freight, import duties, and any other taxes should be added to the benchmark price before determining whether the Indonesian price for pulpwood confers a benefit. *See* 19 CFR 351.511(a)(2); *see also U.S. Steel Corp. v. United States*, Slip Op. 2009–152 at 17–18 (CIT Dec. 30, 2009). We currently do not have this information on the record; however, we plan to gather it prior to the final determination.

When we compare the revised Malaysian export prices to the prices APP/SMG paid to the unaffiliated pulpwood suppliers on a per–unit basis, we find that there is a benefit conferred through the GOI's provision of logs to pulp and paper producers. To calculate the subsidy, we first calculated a per cubic meter benefit for each species of logs. We then multiplied the volume of each species purchased by APP/SMG from unaffiliated forestry/harvesting companies in order to calculate the total benefit.

We capped the quantity for each type of log used in the benefit calculation by the lower of the total quantity, by species, purchased by IK and Lontar during the POI (after deducting the harvest quantity by the cross–owned APP/SMG forestry companies used in the stumpage calculation) or the total quantity, by species, purchased by the APP/SMG forestry companies from unaffiliated suppliers during the POI. We consider the application of this cap appropriate because, based on the reported pulpwood and log purchase and sales information, there is insufficient information to include in the benefit calculation any quantity beyond what the APP/SMG forestry companies purchased from unaffiliated suppliers. We will continue to gather information to ensure that the application of this cap is appropriate.

We then summed the benefit for each species and divided this amount by the total FOB external sales values of the APP/SMG pulp and paper producers. We have not included in the denominator any external sales by the APP/SMG forestry companies because, just as with stumpage, we are capturing in our benefit calculation only pulpwood sold to APP/SMG pulp and paper companies. Furthermore, we have not included in this log export ban calculation any APP/SMG forestry companies' harvested pulpwood, since we have captured any benefit they receive from the log export ban in the stumpage benefit calculation. On this basis, we calculate a net countervailable subsidy rate of 4.39 percent ad valorem for TK/PD/IK. *See CCP Preliminary Calculation Memorandum.*

*C. Debt Forgiveness through the Indonesian Government's Acceptance of Financial Instruments with No Market Value*

Petitioners alleged that, in the CFS investigation, the Department found that the GOI provided countervailable debt forgiveness by accepting COEs, which had no value, as payment for a portion of APP/SMG's debt. In *Indonesia CFS Final Determination,* the Department determined that the GOI's acceptance in 2002 of COEs as partial repayment of APP/SMG's debt constituted a financial contribution, in the form of debt forgiveness, in accordance with section 771(5)(D)(i) of the Act because the GOI allowed APP/SMG's shareholders to repay debts with COEs that had no market or commercial value. The Department also determined that the GOI's acceptance of COEs as partial repayment of APP/SMG's debt provided a benefit in accordance with section 771(5)(E) of the Act and 19 CFR 351.508(a) in the amount of the debt repaid with the valueless COEs. The Department determined that the GOI's acceptance of COEs as partial repayment of APP/SMG's debt was specific under section 771(5A)(D)(iii) of the Act. *See Indonesia CFS Final Determination* and *CFS IDM* at 38.

In 1999, the Indonesia Bank Restructuring Agency (IBRA), the GOI agency responsible for the restructuring of the Indonesian banking sector, assumed non–performing loans of Bank Internasional Indonesia (BII), which had previously been controlled by APP/SMG. When IBRA assumed a bank's loans, it issued COEs to the bank's former shareholders. *See id.* at 38. COEs were financial instruments that represented a bank's former shareholders' right to repurchase bank shares. The COEs functioned as options that, if exercised, required these shareholders to repurchase their shares in the bank from IBRA using the proceeds of IBRA's sale of the bank's loan assets which were distributed to the shareholders. Although, in the CFS investigation, APP/SMG reported that COEs had not been used to reduce the debt of any companies in the APP/SMG group, at verification in that investigation the Department learned that such debt was in fact repaid with COEs in 2002. *See id.* at 38. Therefore, the Department found the reported non–use of COEs by cross–owned companies to repay debt was unverifiable, forcing the Department to rely upon facts available for its analysis of this program in accordance with sections 776(a) and (b) of the Act. *See id.* at 38–39. Record information from the verification report shows that the COEs were non–transferable, non–negotiable, and had no market or commercial value. *See* Memorandum to the File from the Verification Team, *Countervailing Duty Investigation of Coated Free Sheet (CFS) Paper from Indonesia: Verification of the Questionnaire Responses Submitted by the Ministry of Forestry and the Ministry of Finance*, dated August 24, 2007 (*CFS Verification Report*) at 27, on the record as Exhibit 32 of GOI Initial Questionnaire Response, dated December 29, 2009. According to the Department's analysis in *Indonesia CFS Final Determination*, COEs only had value to the extent they were used to repurchase previously–owned bank shares back from IBRA. *See Indonesia CFS Final Determination* and *CFS IDM* at 39. Therefore, holding companies with shareholdings in companies in APP/SMG were able to use COEs to pay

off some of the debt owed to its affiliated bank, BII, which had been assumed by the GOI. As a result, APP/SMG's creditor, the GOI, in turn allowed APP/SMG to repay a portion of its debt with COEs that had no market value. Accordingly, the Department found that the GOI's acceptance of valueless COEs as debt repayment provided a countervailable subsidy to APP/SMG.

In the November 3, 2009 questionnaire issued to the GOI, we asked if there was any new information or evidence of changed circumstances with respect to the GOI's administration of this program that would warrant a reconsideration of the Department's prior countervailability finding. We also requested that the GOI provide all of the relevant information and documentation. The GOI stated that it disagreed with the Department that the COEs had no value, and provided some documents related to the valuation of the COEs. *See GOI Initial Questionnaire Response*, dated December 29, 2009 at 27. The documents submitted only showed that the GOI assigned a value to the COEs; they did not demonstrate that the COEs had a market value as a financial instrument that was equivalent to cash. *See id.* at Exhibits 31–32. In our January 29, 2010 supplemental questionnaire, we asked the GOI to provide further documentation to support its claim that the COEs had value in a secondary market or other commercial environment. In its February 16, 2010 response to that questionnaire, the GOI stated that, while it still disagreed with the Department's determination that the COEs had no value, it would not contest the Department's prior determination in *Indonesia CFS Final Determination* due to the complexity of the issues, the passage of time, and the impracticality of translating large volumes of information. *See GOI Supplemental Questionnaire Response*, dated February 16, 2009 at 8.

Because the GOI has not provided any new information that calls into question our determination in *Indonesia CFS Final Determination* that the GOI's acceptance in 2002 of valueless COEs as partial payment for some of APP/SMG's debt was countervailable, we preliminarily determine that the GOI's acceptance of COEs constituted a financial contribution, in the form of debt forgiveness, within the meaning of section 771(5)(D)(i) of the Act. A benefit was conferred upon respondents equal to the value of the debt repaid with the valueless COEs within the meaning of section 771(5)(E) of the Act and 19 CFR 351.508(a). We also determine that the GOI's acceptance of COEs as partial debt repayment by APP/SMG was a company–specific action of the GOI in accordance with section 771(5A)(D)(iii) of the Act.

To calculate the benefit received under this program, 19 CFR 351.508(a) provides that a benefit exists equal to the amount of the principal and/or interest that the government has forgiven (*i.e.*, the amount of the debt repaid in 2002 with the valueless COEs), and that we treat this benefit as a non–recurring subsidy in accordance with 19 CFR 351.508(c)(1). Under 19 CFR 351.508(b), in the case of debt forgiveness, we normally will consider the benefit as having been received on the date on which the debt was forgiven. Because this debt was forgiven in 2002 and was allocated over time, there is a benefit from this program attributable to the 2008 POI in this investigation.[8] Therefore, the calculation for this subsidy program in the CFS investigation includes the benefit amount from this program received during the POI in this investigation. At our request, APP/SMG placed the calculation memorandum from *Indonesia CFS Final Determination* on the record in the instant investigation. As explained in *Indonesia CFS Final Determination* and *Final CFS Calculation Memorandum, to calculate the benefit, we applied the methodology set forth in 19 CFR 351.524(d)(1) for non–recurring benefits. We allocated the am*ount of the debt forgiven over an AUL of 13 years. *See Final CFS Calculation Memorandum* and the "Allocation Period" section above. Because APP/SMG was uncreditworthy at the time IBRA accepted the COEs as partial repayment for its debt obligations, we have added a risk premium to the discount rate used to allocate the debt forgiveness benefit, calculated according to the methodology described in 19 CFR 351.505(a)(3)(iii). *See* "Creditworthiness" section above and *Final CFS Calculation Memorandum*.

Because we are making no changes to the methodology that was used in the CFS investigation to calculate the benefit stream from this debt forgiveness, we have taken the benefit amount attributable to the POI from the *Final CFS Calculation Memorandum* and divided it by the total external sales of the cross–owned APP/SMG group as discussed above in the "Cross–Ownership" section. *See also CCP Preliminary Calculation Memorandum*. On this basis, we preliminarily determine the net countervailable subsidy rate to be 0.40 percent *ad valorem* for TK/PD/IK.

*D. Debt Forgiveness through APP/SMG's Buyback of Its Own Debt from the Indonesian Government*

Petitioners alleged that in *Indonesia CFS Final Determination*, the Department found that the GOI provided countervailable debt forgiveness when it sold approximately US $880 million worth of APP/SMG debt for US $214 million to Orleans, a company which the Department determined was affiliated with APP/SMG. *See* Petition Volume V, dated September 23, 2009 at 16. In *Indonesia CFS Final Determination*, the Department determined that the GOI's 2003 sale of APP/SMG's debt to an affiliate constituted a financial contribution, in the form of debt forgiveness, within the meaning of section 771(5)(D)(i) of the Act. A benefit was received equal to the difference between the value of the outstanding debt and the amount Orleans paid for it, within the meaning of 19 CFR 351.508(a). Furthermore, we found the debt forgiveness to be specific in accordance with 771(5A)(D)(iii) of the Act because a company's repurchase of its own debt from the GOI at a steep discount, when such a transaction was prohibited, means that this financial contribution and benefit are specific to a company, APP/SMG. We further found that because a special program, the Strategic Asset Sales Program, was created, with special rules and obligations, to handle the debt sales of five large and significant obligors, including APP/SMG, this sale was limited to a group of enterprises in accordance with section 771(5A)(D)(iii)(I) of the Act.

In the CFS investigation, the Department found that, under the GOI's Regulation SK–7/BPPN/0101 (Regulation SK–7), IBRA was prohibited from selling assets that were under its control back to the original owner, or to a company affiliated with the original owner. *See Indonesia CFS Final Determination* and *CFS IDM* at 42. At verification, the GOI did not provide crucial documentation that Orleans would have provided to IBRA as a condition of the debt sale, and was necessary for determining that Orleans was not affiliated with APP/SMG. This information included Orleans' registration and bid documents, and Orleans' articles of association, which

[8] *See APP/SMG Initial Questionnaire Response*, dated December 29, 2009 at Exhibit 65: *Final Affirmative Countervailing Duty Determination: Coated Free Sheet Paper from Indonesia: Calculations for PT. Pabrik Kertas Tjiwi Kimia Tbk and PT. Pindo Deli Pulp and Paper Mills*, dated October 17, 2007 (*Final CFS Calculation Memorandum*).

would have identified its shareholders. *See id.* at 42. *See also CFS Verification Report* at 30. During verification, the GOI explained that Orleans would have been required to submit such documentation, and that IBRA would have reviewed a bidder's articles of association, which would contain ownership information, as part of its bid package. *See CFS Verification Report* at 51. *See also Indonesia CFS Final Determination* and *CFS IDM* at 108 and 111, respectively. The GOI informed the Department at verification that IBRA, as part of its due diligence, would have received and reviewed information regarding a bidder's ownership and access to financing to determine whether a bidder was qualified. *See Indonesia CFS Final Determination* and *CFS IDM* at 112. Thus, because IBRA's files reportedly would contain documentation which would have identified Orleans' shareholders, access to the complete file on the sale to Orleans was a crucial starting point for the Department's attempt to verify the claim by APP/SMG that Orleans was not affiliated with APP/SMG. *See id.* at 112. Due to the absence of these documents from the record, in accordance with sections 776(a) and (b) of the Act, the Department determined that the GOI withheld information that had been requested and did not cooperate to the best of its ability in complying with the Department's request for necessary documentation to determine whether Orleans was affiliated with APP/SMG. *See id.* at 44. Therefore, as discussed above, we found Orleans to be affiliated with APP/SMG and determined that the GOI had provided countervailable debt forgiveness to APP/SMG.

In the November 3, 2009 questionnaire issued to the GOI, we asked if there was any new information or evidence of changed circumstances with respect to the GOI's administration of this program that would warrant a reconsideration of the Department's prior countervailability finding. We also requested that the GOI provide all of the relevant information and documentation. On December 29, 2009, the GOI responded that it believed the Department's finding in *Indonesia CFS Final Determination* to be both factually and legally incorrect, but it provided no new information with respect to the debt buyback program. *See GOI Initial Questionnaire Response*, dated December 29, 2009 at 29–30. The GOI also stated that it would continue to review archived documents regarding this allegation and would provide any new information that might develop. In the supplemental questionnaires issued to the GOI on January 29, 2010, and to APP/SMG on January 30, 2010, we stated that if the GOI or APP/SMG disagreed with the Department's determination in *Indonesia CFS Final Determination*, they should provide complete information about the sale to Orleans and provide documentation demonstrating that Orleans had no affiliation with APP/SMG. In the questionnaire issued to the GOI, we instructed the GOI to "provide the Department with Orleans' registration and bid package, including Orleans' articles of association showing Orleans' shareholders." *See Supplemental Questionnaire to the GOI*, dated January 29, 2010 at 10.

In its February 22, 2010 response, the GOI stated that IBRA structured its bidding policy to ensure that only qualified parties would be allowed to bid. Requirements for bidding included: (1) the submission of a Letter of Compliance as part of the bid package, confirming that the bidder was not affiliated with the original debtor; (2) a contractual representation that served as a self–certification from the bidder that it was not affiliated with the original debtor; and (3) an opinion letter from outside counsel confirming the eligibility of the bidder to bid on the assets. These three documents were provided with *GOI Supplemental Questionnaire Response*, dated February 22, 2010 as Exhibits 28, 29, and 27, respectively. The Department has previously noted that Article 3 of Regulation SK–7 contains a provision for IBRA to conduct due diligence "on the status of its affiliation with the Original Owner." *See Indonesia CFS Final Determination* and *CFS IDM* at 42. According to the GOI's February 22, 2010 questionnaire response, the GOI's due diligence consisted of ensuring its ability to enforce the contractual obligations of the asset sale, including the provision related to affiliation. *See GOI Supplemental Questionnaire Response*, dated February 22, 2010 at 31–32.

The GOI also included the articles of association, as Exhibit 25, which were not made available during the course of the Indonesia CFS investigation. However, the GOI points out that the articles of association, as with the other documents submitted by the GOI, does not disclose, or contain any information about, Orleans' shareholders or its ownership structure. *See id.* at 34. In this same response, the GOI states that the officials who informed the Department at the Indonesia CFS verification that the purchaser would be required, through the documentation it submitted, to establish that it was not affiliated with the company whose debt it was purchasing, did not have full knowledge about all of the possible types of purchasers. *See id.* at 34. The GOI also states that it has identified senior officials involved in the sale of APP/SMG's debt to Orleans who were not involved in the prior verification and who will be made available to answer the Department's questions at the verification of the current investigation. *See id.* at 26. The GOI claims that the totality of documents submitted in this investigation, when properly understood in context, plus the expected availability of officials involved in the debt sale, should have more probative weight than any factors the Department relied on in *Indonesia CFS Final Determination. See id.* at 26.

The identification of Orleans' shareholders is pivotal to the Department's ability to analyze the alleged affiliation between APP/SMG and Orleans. The articles of association, which we understood would reveal Orleans' shareholders, but which, in fact, do not contain ownership information, do not constitute sufficient new factual information to warrant changing our prior determination. Although the GOI is now discounting statements made at the CFS verification by former IBRA officials that ownership information would be part of a purchaser's file,[9] we find those statements from verification more probative at this point in the investigation, because those officials were discussing overall IBRA procedures with which they were familiar. While they may have not been the officials responsible for the Strategic Assets Sales Program, the GOI was unable at the CFS verification to locate any officials who participated in the due diligence determination with respect to APP/SMG's debt sale nor was the Department able to examine the entire file on the APP/SMG debt sale. *See CFS Verification Report* at 50 and 36–41, respectively. Furthermore, there is other information on the record to indicate that Orleans is affiliated with APP/SMG.[10]

In addition, the documents filed by the GOI, which the Department repeatedly requested in the CFS investigation three years ago and which were again requested in this investigation, were only filed a week

[9] *See CFS Verification Report* at 51.

[10] *See* Memorandum to the File from Dana S. Mermelstein, Program Manager: *Countervailing Duty Investigation of Coated Free Sheet Paper from Indonesia: Meeting with an Independent Expert*, dated August 24, 2007, on the record as Exhibit 52 of *APP/SMG Supplemental Questionnaire Response*, dated February 22, 2010.

before this preliminary determination. Based on our initial review of the documents, there appear to be some gaps in the documentation and they raise additional questions about how IBRA handled the APP/SMG sale. Therefore, we preliminarily find that the documentation submitted by the GOI concerning Orleans is not sufficient to overcome our prior determination in *Indonesia CFS Final Determination* that in 2003 IBRA sold APP/SMG's own debt back to it at a significant discount. We therefore preliminarily determine that the GOI's sale of APP/SMG's debt to an affiliate constituted a financial contribution, in the form of debt forgiveness, within the meaning of section 771(5)(D) of the Act. A benefit was received equal to the difference between the value of the outstanding debt and the amount Orleans paid for it, within the meaning of 19 CFR 351.508(a). Because we find Orleans to be affiliated with APP/SMG, and because the GOI maintained a general prohibition against a company, including its affiliates, buying back its own debt, we preliminarily determine that the sale by IBRA of APP/SMG's debt to Orleans was company–specific, consistent with section 771(5A)(D)(iii)(I) of the Act. Furthermore, because a special program was created, with special rules and obligations, to handle the debt sales of five large and significant obligors, including APP/SMG, we also find that this sale was limited to a group of enterprises in accordance with section 771(5A)(D)(i) of the Act.

To calculate the benefit received under this program, 19 CFR 351.508(a) provides that a benefit exists equal to the total value of the debt sold, minus the amount Orleans paid for the debt (the remainder is the value of the debt forgiven), and that we treat this benefit as a non–recurring subsidy in accordance with 19 CFR 351.524(d). Under 19 CFR 351.508(b), in the case of debt forgiveness, we normally will consider the benefit as having been received on the date on which the debt was forgiven. Because this debt was forgiven in 2003 and was allocated over time, there is a benefit from this program attributable to the 2008 POI in this investigation. Therefore, the calculation performed for this subsidy program in the CFS investigation includes the benefit amount from this program applicable in this investigation. As explained in *Indonesia CFS Final Determination* and *Final CFS Calculation Memorandum*, to calculate the benefit, we applied the methodology set forth in 19 CFR 351.524(d)(1) for non–recurring benefits. We allocated the amount of the debt forgiven over an AUL of 13 years. *See Final CFS Calculation Memorandum* and the "Allocation Period" section above. Because APP/SMG was uncreditworthy at the time IBRA accepted the COEs as partial repayment for its debt obligations, we added a risk premium to the discount rate used to allocate the debt forgiveness benefit, calculated according to the methodology described in 19 CFR 351.505(a)(3)(iii). *See* "Creditworthiness" section above and *Final CFS Calculation Memorandum*. Because we are making no changes to the methodology that was used in the CFS investigation to calculate the benefit stream from this debt forgiveness, we have taken the benefit amount attributable to the POI from *Final CFS Calculation Memorandum* and divided it by the total external sales of APP/SMG in the POI, to determine a net countervailable subsidy rate of 2.39 percent ad valorem for TK/PD/IK. *See CCP Preliminary Calculation Memorandum*.

*II. Programs Preliminarily Determined To Be Not Used*

We preliminarily determine that APP/SMG did not apply for or receive any benefits during the POI under the following programs:

*A. Government Provision of Interest–Free Reforestation Loans*

Respondents stated that in *Indonesia CFS Final Determination* the countervailable subsidy during 2005 was only 0.01 percent. Information on the record indicates that the loans to cross–owned APP/SMG companies were repaid prior to 2008 and respondents did not have any outstanding loans under this program during the POI. We therefore preliminarily determine that this program was not used during the POI.

*B. Government Forgiveness of Stumpage Obligations*

*C. Tax Incentives for Investment in Priority Business Lines and Designated Regions*

a. Corporate Income Tax Deduction
b. Accelerated Depreciation and Amortization
c. Extension of Loss Carryforward
d. Reduced Withholding Tax on Dividends

**Verification**

In accordance with section 782(i)(1) of the Act, we intend to verify the information submitted by the GOI and respondents prior to making our final determination.

**Suspension of Liquidation**

In accordance with section 703(d)(1)(A)(i) of the Act, we have calculated a single subsidy rate for TK, PD, and IK, the three cross–owned producers/exporters of the subject merchandise. Sections 703(d) and 705(c)(5)(A) of the Act state that, for companies not investigated, we will determine an all others rate by weighting the individual company subsidy rate of each of the companies investigated by each company's exports of subject merchandise to the United States. However, the all others rate may not include zero and *de minimis* rates or any rates based solely on the facts available.[11] In this investigation, the single rate calculated for TK/PD/IK meets the criteria for the all others rate. Therefore, we have assigned this rate to all other producers and exporters. We preliminarily determine the total estimated net countervailable subsidy rates to be:

| Manufacturer/Exporter | Net Subsidy Rate |
|---|---|
| PT. Pabrik Kertas Tjiwi Kimia, Tbk./ PT. Pindo Deli Pulp and Paper Mills/ PT. Indah Kiat Pulp and Paper, Tbk. | 17.48 percent ad valorem |
| All Others | 17.48 percent ad valorem |

In accordance with sections 703(d)(1)(B) and (2) of the Act, we are directing U.S. Customs and Border Protection to suspend liquidation of all entries of certain coated paper from Indonesia that are entered, or withdrawn from warehouse, for consumption on or after the date of the publication of this notice in the **Federal Register**, and to require a cash deposit or bond for such entries of merchandise in the amounts indicated above.

**ITC Notification**

In accordance with section 703(f) of the Act, we will notify the ITC of our determination. In addition, we are making available to the ITC all non–privileged and non–proprietary information relating to this investigation. We will allow the ITC access to all privileged and business proprietary information in our files, provided the ITC confirms that it will not disclose such information, either publicly or under an administrative

[11] Pursuant to 19 CFR 351.204(d)(3), the Department must also exclude the countervailable subsidy rate calculated for a voluntary respondent. In this investigation, we had no producers or exporters request to be voluntary respondents.

protective order, without the written consent of the Assistant Secretary for Import Administration. In accordance with section 705(b)(2)(B) of the Act, if our final determination is affirmative, the ITC will make its final determination within 45 days after the Department makes its final determination.

**Disclosure and Public Comment**

In accordance with 19 CFR 351.224(b), we will disclose to the parties the calculations for this preliminary determination within five days of its announcement. Unless otherwise notified by the Department, case briefs for this investigation must be submitted no later than 50 days after the date of publication of the preliminary determination. *See* 19 CFR 351.309(c) (for a further discussion of case briefs). Rebuttal briefs must be filed within five days after the deadline for submission of case briefs, pursuant to 19 CFR 351.309(d)(1). A list of authorities relied upon, a table of contents, and an executive summary of issues should accompany any briefs submitted to the Department. Executive summaries should be limited to five pages total, including footnotes. Section 774 of the Act provides that the Department will hold a public hearing to afford interested parties an opportunity to comment on arguments raised in case or rebuttal briefs, provided that such a hearing is requested by an interested party. If a request for a hearing is made in this investigation, the hearing will tentatively be held two days after the deadline for submission of the rebuttal briefs, pursuant to 19 CFR 351.310(d). Any such hearing will be held at the U.S. Department of Commerce, 14th Street and Constitution Avenue, NW, Washington, DC 20230. Parties should confirm, by telephone, the date, time, and place of the hearing 48 hours before the scheduled time.

Interested parties who wish to request a hearing, or to participate if one is requested, must submit a written request to the Assistant Secretary for Import Administration, U.S. Department of Commerce, Room 1870, within 30 days of the publication of this notice, pursuant to 19 CFR 351.310(c). Requests should contain: (1) the party's name, address, and telephone number; (2) the number of participants; and (3) a list of the issues to be discussed. Oral presentations will be limited to issues raised in the briefs.

This determination is issued and published pursuant to sections 703(f) and 777(i) of the Act and 19 CFR 351.221(b)(4).

Dated: March 1, 2010.

**Carole A. Showers,**

*Acting Deputy Assistant Secretary for Import Administration.*

[FR Doc. 2010–4986 Filed 3–8–10; 8:45 am]

BILLING CODE 3510–DS–S

## DEPARTMENT OF COMMERCE

### International Trade Administration

**(C–570–959)**

### Certain Coated Paper Suitable For High–Quality Print Graphics Using Sheet–Fed Presses from the People's Republic of China: Preliminary Affirmative Countervailing Duty Determination and Alignment of Final Countervailing Duty Determination with Final Antidumping Duty Determination

**AGENCY:** Import Administration, International Trade Administration, Department of Commerce.

**SUMMARY:** The Department of Commerce preliminarily determines that countervailable subsidies are being provided to producers and exporters of certain coated paper suitable for high–quality print graphics using sheet–fed presses from the People's Republic of China ("PRC"). For information on the estimated subsidy rates, *see* the "Suspension of Liquidation" section of this notice.

**EFFECTIVE DATE:** March 9, 2010.

**FOR FURTHER INFORMATION CONTACT:** David Neubacher, Jennifer Meek, Mary Kolberg, AD/CVD Operations, Office 1, Import Administration, International Trade Administration, U.S. Department of Commerce, 14th Street and Constitution Avenue, NW, Washington, DC 20230; telephone: (202) 482–5823, (202) 482–2778, (202) 482–1785, respectively.

**SUPPLEMENTARY INFORMATION:**

**Case History**

The following events have occurred since the publication of the Department of Commerce's ("Department") notice of initiation in the **Federal Register**. *See Certain Coated Paper Suitable For High–Quality Print Graphics Using Sheet–Fed Presses from the People's Republic of China: Initiation of Countervailing Duty Investigation*, 74 FR 53703 (October 20, 2009) ("*Initiation Notice*"), and the accompanying Initiation Checklist.

On November 16, 2009, the Department selected two Chinese producers/exporters of certain coated paper suitable for high–quality print graphics using sheet–fed presses ("coated paper") as mandatory respondents: 1) Gold East Trading (Hong Kong) Company Limited ("GEHK"), Gold East Paper (Jiangsu) Co., Ltd. ("GEP") and Gold Huasheng Paper Co., Ltd. ("GHS") (collectively, "Gold companies") and 2) Shandong Sun Paper Industry Joint Stock Co., Ltd. ("Sun Paper") and its affiliate Yanzhou Tianzhang Paper Industry Co., Ltd. ("Yanzhou Tianzhang") (collectively, "Sun Paper companies"). *See* Memorandum to John M. Andersen, Acting Deputy Assistant Secretary for Antidumping and Countervailing Duty Operations (November 16, 2009). A public version of this memorandum is on file in the Department's Central Records Unit in Room 1117 of the main Department building ("CRU").

On November 17, 2009, we issued questionnaires to the Government of the PRC ("GOC"), Gold companies and Sun Paper companies. On December 8, 2009, the Department postponed the deadline for the preliminary determination in this investigation until February 22, 2009. *See Certain Coated Paper Suitable for High–Quality Print Graphics Using Sheet–Fed Presses from the People's Republic of China: Postponement of Preliminary Determination in the Countervailing Duty Investigation*, 74 FR 64669 (December 8, 2009).

We received responses to our questionnaire from the GOC, Gold companies and Sun Paper companies on January 7 and 8, 2010. *See* the GOC's Original Questionnaire Response (January 7, 2010) ("GQR"), Gold companies' Original Questionnaire Response (January 7, 2010) ("GEQR"), Sun Paper's Original Questionnaire Response (January 7, 2010) ("SPQR"), and Yanzhou Tianzhang's Original Questionnaire Response (January 7, and 8, 2010) ("YTQR").

We sent supplemental questionnaires to the Gold companies, Sun Paper companies and the GOC on February 4, 2010. We received responses to these supplemental questionnaires on February 12, 2010. *See* GOC's First Supplemental Questionnaire Response (February 12, 2010) ("G1SQR"), Sun Paper companies' First Supplemental Questionnaire Response (February 12, 2010) ("SP1SQR"), and Gold companies' First Supplemental Questionnaire Response (February 12, 2010).

On January 7, 2010, Appleton Coated LLC, NewPage Corporation, S.D.Warren Company d/b/a Sappi Fine Paper North America, and United Steel, Paper and Forestry, Rubber, Manufacturing, Energy, Allied Industrial and Service Workers International Union (collectively, "Petitioners") requested that the Department extend the deadline for the submission of new subsidy

allegations beyond the January 13, 2010, deadline established by the Department's regulations. On January 8, 2010, we extended the deadline. On January 13 and 14, 2010, Petitioners submitted two sets of new subsidy allegations. The Department is still reviewing these allegations.

On January 19, 2010, Petitioners submitted an allegation that the Asia Pulp and Paper companies (referred to herein as the Gold companies), including GEP, should be considered uncreditworthy for the period 2003 - 2008. Petitioners requested the Department to reaffirm its prior determination with regard to the uncreditworthiness of the Gold companies for the period 2003–2005[1] and initiate an investigation into the creditworthiness of the Gold companies during the period 2006–2008. Petitioners have submitted financial ratios for certain Gold companies and have pointed to other evidence on the record to argue that these companies were uncreditworthy for the period 2006 – 2008. *See* "Creditworthiness" section below.

On January 20, 2010, we issued a letter requesting that the GOC update its original questionnaire response for the cross–owned affiliates for which the Gold companies filed questionnaire responses. The GOC filed its response on February 12, 2010. *See* GOC's Supplemental Response (February 12, 2010) ("GSR").

On January 21, 2010, we issued a letter notifying the GOC that it did not provide responses to certain questions in the original questionnaire. In response to this letter, on February 12, and 25, 2010, the GOC filed information pertaining to the Chinese banking sector and provision of chemicals. *See* GOC's Additional Supplemental Response (February 25, 2010) ("G2SR").

On February 16, 18, 19, 23 and 25, 2010, Petitioners submitted comments for the preliminary determination. The Gold companies submitted comments for the preliminary determination on February 24, 2010.

The Department originally extended the deadline for this preliminary determination until February 22, 2010. As explained in the memorandum from the Deputy Assistant Secretary for Import Administration, the Department has exercised its discretion to toll deadlines for the duration of the closure of the Federal Government from February 5, through February 12, 2010. Thus, all deadlines in this segment of the proceeding have been extended by seven days. The revised deadline for the preliminary determination of this investigation is now March 1, 2010. *See* Memorandum to the Record from Ronald Lorentzen, DAS for Import Administration, regarding "Tolling of Administrative Deadlines As a Result of the Government Closure During the Recent Snowstorm," dated February 12, 2010.

**Scope Comments**

In accordance with the preamble to the Department's regulations, we set aside a period of time in our *Initiation Notice* for parties to raise issues regarding product coverage, and encouraged all parties to submit comments within 20 calendar days of publication of that notice. *See Antidumping Duties; Countervailing Duties*, 62 FR 27296, 27323 (May 19, 1997), and *Initiation Notice*, 74 FR at 53703. We received comments concerning the scope of the antidumping duty ("AD") and countervailing duty ("CVD") investigations of coated paper from the PRC.

Timely comments were filed collectively by the GEP, GHS, PT Pindo Deli Pulp and Paper Mills, and PT Pabrik Kertas Tjimi Kimia Tbk. (collectively, "Scope Respondents") on November 6, 2009. These parties asked the Department to clarify the scope of these investigations by inserting language stating that multi–ply coated paperboard is not covered. According to Scope Respondents, multi–ply coated paperboard is not the same as subject coated paper and paperboard. First, Scope Respondents claim its end–use is not for graphic printing purposes or as a cover for graphic applications as stated in the petition, but primarily for packaging functions (*e.g.*, cosmetics, cigarettes, *etc.*). Moreover, the physical characteristics of this product and its production process differ from those of subject coated paper. In addition, Scope Respondents note the Harmonized Tariff Schedule ("HTS") number for multi–ply coated paper products was not included in the scope by Petitioners and, thus, it was not their intention to consider this product subject to the order. Finally, Scope Respondents claim that including multi–ply coated paperboard would call into question the Department's industry standing analysis.

In response to Scope Respondents' submission, Petitioners submitted comments on November 16, 2009. Petitioners assert the scope provides clear, specific criteria (*e.g.*, sheets, suitable for high quality print graphics, using sheet–fed press, coated, 80 or higher GE brightness level, weight no more than 340 gsm, *etc.*) for determining covered merchandise. Petitioners also point out that neither the petitions nor the initiation documents indicate that plies are a relevant physical characteristic. Furthermore, that multi–ply products produced by Scope Respondents are suitable for more than a single use. Thus, if the coated paper product, including multi–ply coated paperboard, meets the criteria stated in the scope, the product is subject to these investigations and the arguments provided by Scope Respondents (*e.g.*, characteristics, production process, HTS numbers, *etc.*) are immaterial. Finally, Petitioners claim that there is no reason to re–examine the analysis conducted at the initiation phase of the investigation regarding Petitioners' standing.

On December 16, 2009, Scope Respondents requested that the Department revisit its determination regarding industry support. While acknowledging that the deadline had passed, Scope Respondents claimed that neither the statute nor the Department's regulations preclude it from extending the deadline and revisiting its industry support determination.

On December 28, 2009, Petitioners responded that the statute and Statement of Administrative Action are clear that an industry support determination cannot be reconsidered in the context of the investigation. On February 19, 2010, representatives of Scope Respondents met with Department officials to discuss their scope comments. *See* Memorandum to the File from Nancy Decker, regarding "Ex–Parte Meeting with Counsel to Respondents" (March 1, 2010). On February 23, 2010, Scope Respondents filed documents and photographs of items presented to the Department at this *ex parte* meeting. On February 22, 2010, representatives of Petitioners met with Department officials to discuss their scope comments. *See* Memorandum to the File from Nancy Decker, regarding "Ex–Parte Meeting with Counsel to Petitioners" (March 1, 2010). On February 23, 2010, Petitioners filed a submission in which they included a calculation presented to the Department during this *ex parte* meeting.

On February 25, 2010, Petitioners filed additional comments rebutting the documents filed by Scope Respondents and restating their prior claims. In response to a question the Department posed during the *ex parte* meeting, Petitioners stated that the phrase "suitable for high quality print graphics"

[1] *See Coated Free Sheet Paper from the People's Republic of China: Final Affirmative Countervailing Duty Determination*, 72 FR 60645 (October 25, 2007) ("*CFS from the PRC*"), and the accompanying Issues and Decision Memorandum ("*CFS Decision Memorandum*") at p. 8.

could be stricken from the description of the subject merchandise without altering the scope of these investigations.

Based on our review of the scope, we agree with Petitioners that the number of plies is not among the specific physical characteristics (*e.g.*, brightness, coated, weight, *etc.*) defining the subject merchandise. Accordingly, we preliminarily find that multi–ply coated paper is covered by the scope of these investigations, to the extent that it meets the description of the merchandise in the scope.

Given that Petitioners' most recent submission regarding the suitability language was received shortly before these preliminary determinations, we have not had sufficient time to analyze this issue. Accordingly, we have not amended the scope and we invite parties to further comment with respect to whether the phrase "suitable for high quality print graphics" can be stricken from the description of the subject merchandise without altering the scope of these investigations. These scope comments must be filed within 20 calendar days of publication of this notice, and they must be filed on the record of this investigation, as well as the records of the concurrent AD investigations on coated paper from Indonesia and the PRC and the CVD investigation of coated paper from Indonesia.

In their February 25, 2010 submission, Petitioners also stated that the phrase in the scope, "(c) any other coated paper that meets the scope definition" should also include the word "paperboard." We agree that the word "paperboard" was inadvertently omitted (*e.g.*, it is already explicitly included in the first sentence of the scope language and in "(b)" of the second paragraph) and have corrected the scope language to read "(c) any other coated paper and paperboard that meets this scope definition."

**Scope of the Investigation**

The scope of this investigation consists of Coated Paper, which are certain coated paper and paperboard[2] in sheets suitable for high quality print graphics using sheet–fed presses; coated on one or both sides with kaolin (China or other clay), calcium carbonate, titanium dioxide, and/or other inorganic substances; with or without a binder; having a GE brightness level of 80 or higher;[3] weighing not more than 340 grams per square meter; whether gloss grade, satin grade, matte grade, dull grade, or any other grade of finish; whether or not surface–colored, surface–decorated, printed (except as described below), embossed, or perforated; and irrespective of dimensions.

Coated Paper includes: (a) coated free sheet paper and paperboard that meets this scope definition; (b) coated groundwood paper and paperboard produced from bleached chemi–thermo-mechanical pulp ("BCTMP") that meets this scope definition; and (c) any other coated paper and paperboard that meets this scope definition.[4]

Coated Paper is typically (but not exclusively) used for printing multi–colored graphics for catalogues, books, magazines, envelopes, labels and wraps, greeting cards, and other commercial printing applications requiring high quality print graphics.

Specifically excluded from the scope are imports of paper and paperboard printed with final content printed text or graphics.

As of 2009, imports of the subject merchandise are provided for under the following categories of the Harmonized Tariff Schedule of the United States ("HTSUS"): 4810.14.11, 4810.14.1900, 4810.14.2010, 4810.14.2090, 4810.14.5000, 4810.14.6000, 4810.14.70, 4810.19.1100, 4810.19.1900, 4810.19.2010, 4810.19.2090, 4810.22.1000, 4810.22.50, 4810.22.6000, 4810.22.70, 4810.29.1000, 4810.29.5000, 4810.29.6000, 4810.29.70. While HTSUS subheadings are provided for convenience and customs purposes, the written description of the scope of this investigation is dispositive.

The HTSUS subheadings are provided for convenience and customs purposes only, the written description of the scope of this investigation is dispositive.

**Injury Test**

Because the PRC is a "Subsidies Agreement Country" within the meaning of section 701(b) of the Tariff Act of 1930, as amended ("the Act"), the International Trade Commission (the "ITC") is required to determine whether imports of the subject merchandise from the PRC materially injure, or threaten material injury to, a U.S. industry. On November 9, 2009, the U.S. International Trade Commission ("ITC") issued its affirmative preliminary determination that there is a reasonable indication that an industry in the United States is materially injured by reason of allegedly subsidized imports of coated paper from the PRC. *See Certain Coated Paper Suitable for High–Quality Print Graphics Using Sheet–Fed Presses From China and Indonesia; Determinations*, Investigation Nos. 701–TA–470–471 and 731–TA–1169–1170, 74 FR 61174 (November 23, 2009).

**Alignment of Final Countervailing Duty Determination with Final Antidumping Duty Determination**

On October 14, 2009, the Department initiated the CVD and AD investigations of coated paper from Indonesia and the PRC. *See Initiation Notice*, *Certain Coated Paper From Indonesia: Initiation of Countervailing Duty Investigations*, 74 FR 53707 (October 20, 2009) and *Certain Coated Paper Suitable for High–Quality Print Graphics Using Sheet–Fed Presses From Indonesia and the People's Republic of China: Initiation of Antidumping Duty Investigations*, 74 FR 53710 (October 20, 2009). The CVD and the AD investigations have the same scope with regard to the merchandise covered.

On February 25, 2010, Petitioners submitted a letter, in accordance with section 705(a)(1) of the Act, requesting alignment of the final CVD determinations with the final determinations in the companion AD investigations of coated paper from Indonesia and the PRC. Therefore, in accordance with section 705(a)(1) of the Act and 19 CFR 351.210(b)(4), we are aligning the final CVD determination with the final determination in the companion AD investigation of coated paper from the PRC. Consequently, the final CVD determination will be issued no later than July 12, 2010, unless postponed in the companion AD investigation.

**Period of Investigation**

The period for which we are measuring subsidies, *i.e.*, the period of investigation ("POI"), is January 1, 2008, through December 31, 2008.

**Application of the Countervailing Duty Law to Imports from the PRC**

On October 25, 2007, the Department published *CFS from the PRC*, and the accompanying CFS Decision Memorandum. In *CFS from the PRC*, the Department found that

[2] " 'Paperboard' refers to Coated Paper that is heavier, thicker and more rigid than coated paper which otherwise meets the product description. In the context of Coated Paper, paperboard typically is referred to as 'cover,' to distinguish it from 'text.' "

[3] One of the key measurements of any grade of paper is brightness. Generally speaking, the brighter the paper the better the contrast between the paper and the ink. Brightness is measured using a GE Reflectance Scale, which measures the reflection of light off of a grade of paper. One is the lowest reflection, or what would be given to a totally black grade, and 100 is the brightest measured grade.

[4] As noted *supra* in the Scope Comments section, we have determined that the word "paperboard" was inadvertently left out of the sentence in the *Initiation Notice* and have corrected it for the preliminary determination.

given the substantial differences between the Soviet–style economies and China's economy in recent years, the Department's previous decision not to apply the CVD law to these Soviet–style economies does not act as a bar to proceeding with a CVD investigation involving products from China.

*See* CFS Decision Memorandum, at Comment 6. The Department has affirmed its decision to apply the CVD law to the PRC in subsequent final determinations. *See, e.g., Circular Welded Carbon Quality Steel Pipe from the People's Republic of China: Final Affirmative Countervailing Duty Determination and Final Affirmative Determination of Critical Circumstances*, 73 FR 31966 (June 5, 2008), and accompanying Issues and Decision Memorandum ("CWP Decision Memorandum"), at Comment 1.

Additionally, for the reasons stated in the CWP Decision Memorandum, we are using the date of December 11, 2001, the date on which the PRC became a member of the World Trade Organization, as the date from which the Department will identify and measure subsidies in the PRC. *See* CWP Decision Memorandum, at Comment 2.

**Use of Facts Otherwise Available and Adverse Inferences**

Sections 776(a)(1) and (2) of the Act provide that the Department shall apply "facts otherwise available" if necessary information is not on the record or an interested party or any other person: (A) withholds information that has been requested; (B) fails to provide information within the deadlines established, or in the form and manner requested by the Department, subject to subsections (c)(1) and (e) of section 782 of the Act; (C) significantly impedes a proceeding; or (D) provides information that cannot be verified as provided by section 782(i) of the Act.

Section 776(b) of the Act further provides that the Department may use an adverse inference in applying the facts otherwise available when a party has failed to cooperate by not acting to the best of its ability to comply with a request for information.

*GOC – Papermaking Chemicals (Kaolin Clay, Calcium Carbonate, Titanium Dioxide)*

The Department is investigating the alleged provision of kaolin clay, calcium carbonate, and titanium dioxide for less than adequate remuneration by the GOC. We requested information from the GOC regarding the specific companies that produced these papermaking chemicals used by the Gold companies and Sun Paper companies, and more generally about the market in the PRC for these chemicals.

With respect to the specific companies that produced the papermaking chemicals purchased by the Gold companies and Sun Paper companies, we were seeking information that would allow us to determine whether the producers are "authorities" within the meaning of section 771(5)(B) of the Act. Specifically, we stated in our questionnaire that the Department normally treats producers that are majority owned by the government or a government entity as "authorities." Thus, for any producers of kaolin clay, calcium carbonate, or titanium dioxide that were majority government–owned, the GOC needed to provide the requested information only if it wished to argue that those producers were not authorities. For any suppliers that the GOC claimed were directly, 100–percent owned by individual persons during the POI, we requested the following:

- Translated copies of source documents that demonstrate the supplier's ownership during the POI, such as capital verification reports, articles of association, share transfer agreements, or financial statements.
- Identification of the owners, members of the board of directors, or managers of the suppliers who were also government or Chinese Communist Party ("CCP") officials during the POI.
- A discussion of whether and how operational or strategic decisions that are made by the management or board of directors are subject to government review or approval.

Finally, for input suppliers with some direct corporate ownership or less–than-majority state ownership during the POI, we explained that it was necessary to trace back the ownership to the ultimate individual or state owners. For these suppliers, we requested the following:

- The total level (percentage) of state ownership of the company's shares; the names of all government entities that own shares, either directly or indirectly, in the company; whether any of the owners are considered "state–owned enterprises" by the government; and the amount of shares held by each government owner.
- For each level of ownership, a translated copy of the section(s) of the articles of association showing the rights and responsibilities of the shareholders and, where appropriate, the board of directors, including all decision making (voting) rules for the operation of the company.
- For each level of ownership, identification of the owners, members of the board of directors, or managers of the suppliers who were also government or CCP officials during the POI.
- A discussion of whether and how operational or strategic decisions that are made by the management or board of directors are subject to government review or approval.
- A statement of whether any of the shares held by government entities have any special rights, priorities, or privileges, *e.g.*, with regard to voting rights or other management or decision–making for the company; a statement of whether there are any restrictions on conducting, or acting through, extraordinary meetings of shareholders; whether there are any restrictions on the shares held by private shareholders; and the nature of the private shareholders' interest in the company, *e.g.*, operational, strategic, or investment–related, *etc.*

In the GQR at 127, the GOC stated that it had not obtained complete ownership information for the companies that produced these papermaking chemicals purchased by the Gold companies and Sun Paper companies. The GOC further stated that it expected to provide such information when the Department determined which cross–owned affiliates of the mandatory respondents would be required to file responses. *See* GQR at 127–128.

On January 20, 2010, we issued a letter requesting that the GOC update its initial questionnaire response for the cross–owned affiliates for which the Gold companies filed questionnaire responses. The GOC filed its response on February 12, 2010.

On January 21, 2010, we issued a separate letter noting that the GOC did not provide responses to certain questions in the original questionnaire regarding chemical suppliers. We pointed out that the GOC had not requested, and the Department had not granted, an extension of the deadline for submitting this information. We stated that the requested information must be submitted by February 4, 2010. Subsequently, the deadline was extended to February 25, 2010.

On February 16, 2010, the GOC submitted a list of the producers of these papermaking chemicals purchased by Respondents during the POI and

documents that appear to establish the direct owners of most of them. Additional documentation was submitted on February 25, 2010 regarding the ownership of additional papermaking chemical suppliers. Based on the submitted information, the papermaking chemical producers present a variety of ownership structures: majority government owned; corporate ownership; corporate and individual ownership; and individual ownership. Where there was ownership by individuals, the GOC did not answer the question on whether owners, members of the board of directors, or managers of the suppliers were also government or CCP officials during the POI. The GOC also did not discuss whether and how operational or strategic decisions that are made by the management or board of directors are subject to government review or approval. For producers with some direct corporate ownership or less–than-majority state ownership during the POI, the GOC did not respond to our requests for the following information:

- The total level (percentage) of state ownership of the company's shares; the names of all government entities that own shares, either directly or indirectly, in the company; whether any of the owners are considered "state–owned enterprises" by the government; and the amount of shares held by each government owner.
- For each level of ownership, identification of the owners, members of the board of directors, or managers of the suppliers who were also government or CCP officials during the POI.
- A discussion of whether and how operational or strategic decisions that are made by the management or board of directors are subject to government review or approval.
- A statement of whether any of the shares held by government entities have any special rights, priorities, or privileges, *e.g.*, with regard to voting rights or other management or decision–making for the company; a statement of whether there are any restrictions on conducting, or acting through, extraordinary meetings of shareholders; whether there are any restrictions on the shares held by private shareholders; and the nature of the private shareholders' interest in the company, *e.g.*, operational, strategic, or investment–related, *etc*.

Based on the above, we preliminarily determine that the GOC has withheld necessary information that was requested of it and, thus, that the Department must rely on "facts available" in making our preliminary determination. *See* sections 776(a)(1) and (a)(2)(A) of the Act. Moreover, we preliminarily determine that the GOC has failed to cooperate by not acting to the best of its ability to comply with our request for information. Consequently, an adverse inference is warranted in the application of facts available. *See* section 776(b) of the Act. Therefore, we are assuming adversely that all of Respondents' non–cross-owned suppliers of kaolin clay, calcium carbonate, and titanium dioxide are "authorities."

As explained above, the Department also requested more general information from the GOC about the markets in the PRC for these chemicals. This additional information is necessary to determine whether these papermaking chemicals have been provided for less than adequate remuneration because it allows us to establish a benchmark for determining whether a benefit has been provided. The GOC initially provided information in the GSR and then updated this information in the G2SR. Upon review of the submitted information, we determine we require additional information, including information about the GOC's ownership classifications, other ways in which the GOC may influence the markets for these papermaking chemicals in the PRC, and the efforts the GOC has made to obtain certain of the requested data. Therefore, while we have preliminarily determined that the producers of the papermaking chemicals purchased by the Gold companies and Sun Paper companies are "authorities," we are not making a finding that these chemicals have been provided for less than adequate remuneration for this preliminary determination and have listed these alleged subsidies under the "Programs for Which More Information Is Required" section, below.

*GOC – Electricity*

The GOC also did not provide a complete response to the Department's request for information regarding the GOC's alleged provision of electricity for less than adequate remuneration. Specifically, the Department requested that the GOC explain how electricity cost increases are reflected in retail price increases. In its GSR, the GOC responded that it was gathering this information, but it did not request an extension from the Department for submitting this information after the original questionnaire deadline date.

As explained above in connection with the information requested about the producers of papermaking chemicals purchased by the Gold companies and Sun Paper companies, the Department made clear that its standard investigation procedures require the GOC to request an extension when it is not able to meet a deadline. *See*, *e.g.*, 19 CFR 351.302(c). In this regard, the Department notes that the GOC has participated in numerous CVD investigations and the GOC is familiar with this standard procedure. Because the GOC did not ask for or receive an extension of that deadline, we preliminarily determine that the GOC has failed to provide necessary information and, thus, the Department must rely on "facts available" in making our preliminary determination. *See* section 776(a)(1), section 776(a)(2)(A) of the Act. Moreover, we preliminarily determine that the GOC has failed to cooperate by not acting to the best of its ability to comply with our request for information as it did not respond by the deadline dates, nor did it provide any explanation stating why it was unable to provide the requested information by the established deadlines, with the result that an adverse inference is warranted in the application of facts available. *See* section 776(b) of the Act.

In drawing an adverse inference, we find that the GOC's provision of electricity constitutes a financial contribution within the meaning of section 771(5)(D) of the Act and is specific within the meaning of section 771(5A) of the Act. We have also relied on an adverse inference in selecting the benchmark for determining the existence and amount of the benefit. *See* discussion *infra* at I.D.1 "Provision of Electricity" further explaining the Department's determinations with respect to financial contribution, benefit, and specificity. The benchmark rates we have selected as adverse facts available are based on GOC electricity grid rates we obtained for various provinces in the PRC. *See* GSR at Exhibit 9, and Memorandum to File from David Neubacher, International Trade Compliance Analyst, Office 1, "Electricity Rate Data" (March 1, 2010) (attaching public government rate document provided in the CVD investigation of "Certain Kitchen Appliance Shelving and Racks from the People's Republic of China").

For details on the calculation of the subsidy rate for Respondents, *see* below at section I.D.1, "Provision of Electricity for Less Than Adequate Remuneration."

*Yanzhou Tianzhang - Exemption for City Maintenance and Construction Taxes and Education Surcharges for FIEs*

In response to the Department's questionnaire, Yanzhou Tianzhang reported that it did not use the "Exemption for City Maintenance and Construction Taxes and Education Surcharges for FIEs" program. Despite this, proprietary information submitted by Yanzhou Tianzhang shows the company did not pay these taxes or surcharges. As explained below in the section where we discuss this program, there appears to have been some confusion about the term "exemption" and, in particular, whether companies can be "exempted" from paying taxes they have never been subject to.

Because Yanzhou Tianzhang failed to provide the information needed to calculate its benefit under this program (*e.g.*, what the company would have owed had it been subject to these taxes and surcharges), we are relying on facts otherwise available to calculate a preliminary margin pursuant to section 776(a) of the Act. Because we were not able to seek clarification from Yanzhou Tianzhang before this preliminary determination, we are unable to determine whether the failure to provide this information resulted from a failure to cooperate within the meaning of section 776(b) of the Act. Accordingly, we are applying the Gold companies' calculated rate for this program as neutral facts available.

**Subsidies Valuation Information**

*Allocation Period*

The average useful life ("AUL") period in this proceeding, as described in 19 CFR 351.524(d)(2), is 13 years according to the U.S. Internal Revenue Service's 1977 Class Life Asset Depreciation Range System. *See* U.S. Internal Revenue Service Publication 946 (2008), *How to Depreciate Property*, at Table B–2: Table of Class Lives and Recovery Periods. No party in this proceeding has disputed this allocation period.

*Attribution of Subsidies*

The Department's regulations at 19 CFR 351.525(b)(6)(i) state that the Department will normally attribute a subsidy to the products produced by the corporation that received the subsidy. However, 19 CFR 351.525(b)(6)(ii)-(v) directs that the Department will attribute subsidies received by certain other companies to the combined sales of those companies if (1) cross–ownership exists between the companies, and (2) the cross–owned companies produce the subject merchandise, are a holding or parent company of the subject company, produce an input that is primarily dedicated to the production of the downstream product, or transfer a subsidy to a cross–owned company.

According to 19 CFR 351.525(b)(6)(vi), cross–ownership exists between two or more corporations where one corporation can use or direct the individual assets of the other corporation(s) in essentially the same ways it can use its own assets. This regulation states that this standard will normally be met where there is a majority voting interest between two corporations or through common ownership of two (or more) corporations. The U.S. Court of International Trade ("CIT") has upheld the Department's authority to attribute subsidies based on whether a company could use or direct the subsidy benefits of another company in essentially the same way it could use its own subsidy benefits. *See Fabrique de Fer de Charleroi v. United States*, 166 F. Supp. 2d 593, 600–604 (CIT 2001).

**Gold companies**

GEP and the other mandatory respondent, GHS, producers of subject merchandise, responded on behalf of themselves and the following affiliates: Sinar Mas Paper (China) Investment Co., Ltd. ("SMPI"); Ningbo Zhonghua Paper Co., Ltd. ("NBZH"); Ningbo Asia Pulp & Paper Co., Ltd. ("NAPP"); Gold Zuan Chemicals (Suzhou) Co., Ltd. ("GZC"); Gold Lun Chemicals (Zhenjiang) Co., Ltd. ("GLC"); Gold Sheng Chemicals (Zhenjiang) Co., Ltd. ("GSC"); Hainan Jinhai Pulp & Paper Co., Ltd. ("JHP"); Sichan Jianan Pulp Co., Ltd. ("JAP"); Guangxi Jingui Forestry Co., Ltd. ("JGF"); Guangxi Jinqinzhou High–Yield Forest Co., Ltd. ("JQZ"); Jinqing Yuan Timber land (Paper Mill) Co., Ltd. ("JQY"); Hainan Jinhua Forestry Co., Ltd. ("JHF"); Jinshaoguan First Quality Timberland (Paper Mill) Ltd. ("JSG"); Yangjiang Golden Sun Forestry Co., Ltd. ("YJGS"); Leizhou Golden Sun Forestry Co., Ltd. ("LZGS"); Ganzhou Golden Sun Forestry Co., Ltd. ("GZGS"); and Wenshan Jin Wenshan Forestry Co., Ltd. ("WSGWS"). GEP reported the above companies as cross–owned within the meaning of 19 CFR 351.525(b)(6)(vi) by virtue of ownership, majority–ownership, or common control. *See* GEQR at 7–9. Therefore, based on information on the record, we preliminarily determine that cross–ownership existed between GEP, GHS and the above companies during the POI pursuant to 19 CFR 351.525(b)(6)(vi).

SMPI is the parent of the responding Gold companies. There is no evidence that SMPI served as a conduit for subsidies to a particular subsidiary. Therefore, in accordance with 19 CFR 351.525(b)(6)(iii), we have attributed the subsidies received by SMPI to the consolidated sales of SMPI and its subsidiaries.

GEP and GHS reported that NBZH and NAPP produced multi–ply coated paper during the POI. Although the Gold companies claim that multi–ply paper products are excluded from this investigation, we disagree that they are *per se* excluded (*see* "Scope Comments" section above). Because NBZH and NAPP produced multi–ply products that meet the scope criteria (*e.g.*, weight, brightness, coating, *etc.*) we are treating both NBZH and NAPP as producers of subject merchandise and, pursuant to 19 CFR 351.525(b)(6)(ii), we are attributing the subsidies received by NBZH and NAPP to the combined sales of GEP, GHS, NAPP, and NBZH minus any intercompany sales.

GZC, GLC, and GSC supplied papermaking chemicals to GEP and GHS during POI. JHP and JAP supplied GEP and GHS with pulp during the POI during the POI. Finally, JGF, JQZ, JQY, JHF, JSG, YJGS, LZGS, GZGS, and WSGWS supplied wood to JHP for the production of pulp during the POI. See GEQR at 7–9. GEP and GHS argue that any subsidies to the cross–owned pulp and wood producers should not be attributed to producers of subject merchandise because the pulp and wood were used only to produce paper sold in the PRC.

With regard to the cross–owned suppliers of papermaking chemicals, we preliminarily determine that the papermaking chemicals are "primarily dedicated" to the production of the downstream product, paper, based on Respondents having identified them as "papermaking chemicals." *See* GEQR at 5. Thus, pursuant to 19 CFR 525(b)(6)(iv), we are attributing subsidies received by GSC, GZC, and GLC to the combined sales of the input and downstream products produced by each company (excluding sales between the companies).

In addition, we preliminarily determine that subsidies received by the cross–owned pulp and wood suppliers should be attributed to the combined sales of the input and the downstream products produced from those inputs (excluding sales between the companies). This is consistent with the Department's prior determination that pulp is "primarily dedicated" to the production of paper, as required by 19 CFR 351.525(b)(6)(iv). *See*, *e.g.*, CFS Decision Memorandum at Comment 18 and *Final Affirmative Countervailing*

*Duty Determination and Final Negative Critical Circumstances Determination: Certain Lined Paper Products from Indonesia*, 71 FR 47174 (August 16, 2006), and accompanying Issues and Decision Memorandum at Comment 3.

With regard to GEP's and GHS's argument that these inputs are not included in the downstream products exported to the United States, we note the Department has addressed this issue in other proceedings. *See*, *e.g.*, *Light–Walled Rectangular Pipe and Tube From People's Republic of China: Final Affirmative Countervailing Duty Investigation Determination*, 73 FR 35642 (June 24, 2008) ("*LWRP from the PRC*") and accompanying Issues and Decision Memorandum ("LWRP Decision Memorandum") at Comment 8 and CFS Decision Memorandum at Comment 18. We have found that it would be improper to trace subsidized inputs through a company's production process and it would be improper to tie subsidies bestowed on the input product exclusively to sales in the domestic market. *See*, *e.g.*, LWRP Decision Memorandum at Comment 8. Therefore, we have rejected GEP's and GHS's argument.

**Sun Paper companies**

Sun Paper and Yanzhou Tianzhang responded on behalf of themselves. They reported that Yanzhou Tianzhang is the producer of the subject merchandise and Sun Paper is the parent company of Yanzhou Tianzhang. *See* I.D.1 "Provision of Electricity" section below. There is no evidence that Sun Paper served as a conduit for subsidies to a particular subsidiary. Therefore, in accordance with 19 CFR 351.525(b)(6)(iii), we have attributed the subsidies received by Sun Paper to the consolidated sales of Sun Paper and its subsidiaries. Sun Paper identified two other affiliated companies that produce the subject merchandise. Sun Paper notes that these two companies, International Paper & Sun Cartonboard Co., Ltd. and Shandong International Paper and Sun Coated Paperboard Co., Ltd., are 50/50 joint ventures between International Paper, and Sun Paper. However, Sun Paper claims that cross–ownership does not exist between itself and the joint venture companies because Sun Paper states that it cannot use or direct the individual assets of these two joint venture companies in the same way that it can use its own assets as required under 19 CFR 351.525(b)(6)(vi). In support of this claim, Sun Paper cites to the articles of association for both companies. *See* SP1SQR at 2–3. The information contained in the documents is proprietary and we address it in a proprietary memorandum. *See* Memorandum to the File from Mary Kolberg, International Trade Analyst, regarding "Sun Paper Calculations for the Preliminary Determination" (March 1, 2010). Based on the information and analysis described in that memorandum, we preliminarily determine that Sun Paper is not cross–owned with these joint ventures within the meaning of 19 CFR 351.525(b)(6)(vi). We intend to examine this issue further following the preliminary determination.

Finally, Sun Paper and Yanzhou Tianzhang identified several other affiliated companies, but reported that these affiliates do not produce the subject merchandise, provide an input to the downstream product or otherwise fall within the situations described in 19 CFR 351.525(b)(6)(iii)-(v). *See* SPQR at 1–3, YTQR at 1–3, and SP1SQR at 3 and 4. Therefore, we do not reach the issue of whether these companies and Sun Paper are cross–owned within the meaning of 19 CFR 351.525(b)(6)(vi) and we are not including these companies in our subsidy calculations.

*Entered Value ("EV") Adjustment*

The Gold companies have reported that their sales of subject merchandise to the United States occur under toll processing agreements with two affiliated trading companies. Thus, they have requested the Department make an adjustment to the calculated subsidy rate to account for the mark–up between the export value from the PRC and the entered value of subject merchandise into the United States.

Citing the CFS Decision Memorandum, *CWASP from the PRC*, and *Bearings from Thailand*,[5] the Gold companies note the Department has generally looked at six criteria to determine whether to grant such an adjustment. The six criteria are: 1) the price on which the alleged subsidy is based differs from the U.S. invoiced price; 2) the exporters and the party that invoices the customer are affiliated; 3) the U.S. invoice establishes the customs value to which CVDs are applied; 4) there is a one–to-one correlation between the invoice that reflects the price on which subsidies are received and the invoice with the mark–up that accompanies the shipment; 5) the merchandise is shipped directly to the United States; and 6) the invoices can be tracked as back–to-back invoices that are identical except for price.

On February 19, 2010, Petitioners filed comments acknowledging that the Department should establish a CVD rate that is commensurate with the entered value of the subject merchandise, but arguing against the specific adjustment proposed by the Gold companies. First, they argue the proposed adjustment is inconsistent with law as it results in an undercollection of duties. Second, they claim the Gold companies have not provided sufficient supporting information in regard to the six criteria for granting the adjustment. Third, they cite to proprietary information to argue that the adjustment calculated by the Gold companies is flawed. Finally, Petitioners argue, the best method to achieve the goal of matching the subsidy calculation with the duties that are eventually collected is to use GEP's consolidated sales value as the denominator in the subsidy rate calculation. If the Department does make the adjustment requested by the Gold companies, Petitioners request that the Department recalculate the adjustment because the Gold companies have included data in their claimed adjustment not related to the entered value of the subject merchandise. (The exact nature of this data is proprietary.)

Petitioners supplemented their comments on February 23, 2010, with additional concerns on the adjustment information submitted by the Gold companies and also provided an alternative adjustment formula to the one used by the Department in prior cases. Finally, the Department received comments from the Gold companies responding to Petitioners' arguments on February 24, 2010, and Petitioners responded to the Gold companies' submission with additional comments on February 25, 2010.

As indicated by the determinations cited by the Gold companies, the Department has a practice to make an adjustment to the calculated subsidy rate when the sales value used to calculate that subsidy rate does not match the entered value of the merchandise, *i.e.*, where subject merchandise exported to the United States is produced under tolling agreements, and where the respondent can provide data to demonstrate that the six criteria above are met. In the instant case, we have not made the adjustment because the information submitted by the Gold companies did not permit an accurate calculation of the adjustment.

[5] *See* CFS Decision Memorandum at 9, *Circular Welded Austenitic Stainless Pressure Pipe from the People's Republic of China: Final Affirmative Countervailing Duty Determination*, 74 FR 4936 (January 28, 2009) and accompanying Issues and Decision Memorandum at 11-12 ("*CWASP from the PRC*"), and *Ball Bearings and Parts Thereof From Thailand; Final Results of Countervailing Duty Administrative Review*, 57 FR 26646, 26647 (June 15, 1992) ("*Bearings from Thailand*").

In GESQR at S1–23, the Gold companies state the adjustment concerns all four paper producing companies and two affiliated offshore trading companies, GEHK and China Union (Macao Offshore) Company Limited. Moreover, the Gold companies assert that the sample documentation they provided demonstrates that each of the four companies meet the criteria as outlined in the above–mentioned cases. We disagree, however, that adequate support documentation was provided for each of the producer/trading company combinations. Moreover, for the producer/trading company combinations for which adequate information was provided, we were not able to disaggregate their sales so that we could apply the adjustment to them.

The Department has not applied the requested adjustment in this preliminary determination because the supporting information was not submitted and not because we have rejected or changed our practice. However, Petitioners' claims about the propriety of the current adjustment methodology have raised issues that could not be fully evaluated in the limited time available before the preliminary determination. Thus, we intend to examine these claims and invite parties to provide additional comments on the Department's entered value EV adjustment methodology following the preliminary determination in their case and rebuttal briefs.

**Benchmarks and Discount Rates**

Section 771(5)(E)(ii) of the Act explains that the benefit for loans is the "difference between the amount the recipient of the loan pays on the loan and the amount the recipient would pay on a comparable commercial loan that the recipient could actually obtain on the market." Normally, the Department uses comparable commercial loans reported by the company for benchmarking purposes. *See* 19 CFR 351.505(a)(3)(i). If the firm did not have any comparable commercial loans during the period, the Department's regulations provide that we "may use a national interest rate for comparable commercial loans." *See* 19 CFR 351.505(a)(3)(ii).

As noted above, section 771(5)(E)(ii) of the Act indicates that the benchmark should be a market–based rate. For the reasons explained in *CFS from the PRC*,[6] loans provided by Chinese banks reflect significant government intervention in the banking sector and do not reflect rates that would be found in a functioning market. Because of this, any loans received by Respondents from private Chinese or foreign–owned banks would be unsuitable for use as benchmarks under 19 CFR 351.505(a)(3)(i). Similarly, the GOC's intervention in the banking sector precludes us from using a national interest rate for commercial loans as envisaged by 19 CFR 351.505(a)(3)(ii). Therefore, because of the special difficulties inherent in using a Chinese benchmark for loans, the Department is selecting an external market–based benchmark interest rate. The use of an external benchmark is consistent with the Department's practice.

We are calculating the external benchmark using the regression–based methodology first developed in *CFS from the PRC*[7] and more recently updated in *LWTP from the PRC*.[8] This benchmark interest rate is based on the inflation–adjusted interest rates of countries with per capita gross national incomes ("GNI") similar to the PRC, and takes into account a key factor involved in interest rate formation, that of the quality of a country's institutions, that is not directly tied to the state–imposed distortions in the banking sector discussed above.

Following the methodology developed in *CFS from the PRC*, we first determined which countries are similar to the PRC in terms of GNI, based on the World Bank's classification of countries as: low income; lower–middle income; upper–middle income; and high income. The PRC falls in the lower–middle income category, a group that includes 55 countries as of July 2007. As explained in *CFS from the PRC*, this pool of countries captures the broad inverse relationship between income and interest rates.

Many of these countries reported lending and inflation rates to the International Monetary Fund and they are included in that agency's international financial statistics ("IFS"). With the exceptions noted below, we have used the interest and inflation rates reported in the IFS for the countries identified as "low middle income" by the World Bank. First, we did not include those economies that the Department considered to be non–market economies for AD purposes for any part of the years in question, for example: Armenia, Azerbaijan, Belarus, Georgia, Moldova, Turkmenistan. Second, the pool necessarily excludes any country that did not report both lending and inflation rates to IFS for those years. Third, we removed any country that reported a rate that was not a lending rate or that based its lending rate on foreign–currency denominated instruments. For example, Jordan reported a deposit rate, not a lending rate, and the rates reported by Ecuador and Timor L'Este are dollar–denominated rates; therefore, the rates for these three countries have been excluded. Finally, for each year the Department calculated an inflation–adjusted short–term benchmark rate, we have also excluded any countries with aberrational or negative real interest rates for the year in question.

The resulting inflation–adjusted benchmark lending rates are provided in the Respondents' preliminary calculation memoranda. *See, e.g.*, Preliminary Determination Calculation Memoranda for Gold companies and Sun Paper (March 1, 2010). Because these are inflation–adjusted benchmarks, it is necessary to adjust Respondents' interest payments for inflation. This was done using the PRC inflation figure as reported in the IFS. *Id.*

The lending rates reported in the IFS represent short- and medium–term lending, and there are not sufficient publicly available long–term interest rate data upon which to base a robust benchmark for long–term loans. To address this problem, the Department has developed an adjustment to the short- and medium–term rates to convert them to long–term rates using Bloomberg U.S. corporate BB–rated bond rates. *See LWRP from the PRC* and LWRP Decision Memorandum at 6–8. In *Citric Acid from the PRC*, this methodology was revised by switching from a long–term mark–up based on the ratio of the rates of BB–rated bonds to applying a spread which is calculated as the difference between the two–year BB bond rate and the n–year BB bond rate, where "n" equals or approximates the number of years of the term of the loan in question. *See Citric Acid and Certain Citrate Salts From the People's Republic of China: Final Affirmative Countervailing Duty Determination*, 74 FR 16836 (April 13, 2009) ("*Citric Acid from the PRC*") and accompanying Issues and Decision Memorandum ("Citric Acid from the PRC Decision Memorandum") at Comment 14. Finally, because these long–term rates are net of inflation as noted above, we adjusted the PRC Respondents' payments to remove inflation.

[6] *See CFS from the PRC* at Comment 10.

[7] *See CFS from the PRC* at Comment 10.

[8] *See Lightweight Thermal Paper From the People's Republic of China: Final Affirmative Countervailing Duty Determination*, 73 FR 57323 (October 2, 2008) ("*LWTP from the PRC*") and accompanying Issues and Decision Memorandum ("LWTP Decision Memorandum") at 8-11.

*Benchmarks for Foreign Currency–Denominated Loans*

For foreign currency–denominated short–term loans, the Department used as benchmarks one–year London Interbank Offering Rate ("LIBOR") rates for the currency in which the loan was denominated, plus the average spread between LIBOR and the one–year corporate bond rates for companies with a BB rating. For long–term foreign currency–denominated loans, the Department added to the applicable short–term LIBOR rate a spread which was calculated as the difference between the one–year BB bond rate and the n–year BB bond rate, where "n" equals or approximates the number of years of the term of the loan in question. *See* LWTP Decision Memorandum at 10.

*Uncreditworthiness Benchmark*

As discussed below, the Department is finding the Gold companies uncreditworthy in 2003 through 2005. To construct the uncreditworthy benchmark rate for those years, we used the long–term rates described above as the "long–term interest rate that would be paid by a creditworthy company" in the formula presented in 19 CFR 351.505(a)(3)(iii).

*Discount Rates*

Consistent with 19 CFR 351.524(d)(3)(i)(A), we have used, as our discount rate, the long–term interest rate calculated according to the methodology described above for the year in which the government agreed to provide the subsidy.

*Creditworthiness*

The examination of creditworthiness is an attempt to determine if the company in question could obtain long–term financing from conventional commercial sources. *See* 19 CFR 351.505(a)(4). According to 19 CFR 351.505(a)(4)(i), the Department will generally consider a firm to be uncreditworthy if, based on information available at the time of the government–provided loan, the firm could not have obtained long–term loans from conventional commercial sources. In making this determination, according to 19 CFR 351.505(a)(4)(i)(A)-(D), the Department normally examines the following four types of information: (1) receipt by the firm of comparable commercial long–term loans; (2) present and past indicators of the firm's financial health; (3) present and past indicators of the firm's ability to meet its costs and fixed financial obligations with its cash flow; and (4) evidence of the firm's future financial position. If a firm has taken out long–term loans from commercial sources, this will normally be dispositive of the firm's creditworthiness. However, if the firm is government–owned, the existence of commercial borrowings is not dispositive of the firm's creditworthiness. This is because, in the case of a government–owned firm, a bank is likely to consider that the government will repay the loan in the event of a default. *See Countervailing Duties; Final Rule*, 63 FR 65348, 65367 (November 25, 1998). For government–owned firms, we will make our creditworthiness determination by examining receipt by the firm of comparable commercial long–term loans and the other factors listed in 19 CFR 351.505 (a)(4)(i).

**Gold East**

In *CFS from the PRC*, the Department found that GEP and its cross–owned subsidiaries were uncreditworthy for the period 2003 through 2005. *See* CFS Decision Memorandum at 8. In our questionnaire, we noted our previous finding from *CFS from the PRC* and explained that if the Gold companies wished to contest it, the companies should provide certain information.

The Gold companies provided information concerning creditworthiness, including the proprietary final creditworthiness memo from *CFS from the PRC*. Based on our review, no new information was submitted that would lead us to reconsider our prior analysis and, thus, we preliminarily reaffirm our determination in *CFS from the PRC*. Therefore, we are preliminarily finding the Gold companies, including GEP and its cross–owned affiliates, to be uncreditworthy for the period 2003 through 2005.

According to 19 CFR 351.505(a)(6), the Department "will not consider the uncreditworthiness of a firm absent a specific allegation by petitioner that is supported by information establishing a reasonable basis to believe or suspect that the firm is uncreditworthy." As noted above in the Case History section, Petitioners have submitted financial ratios for the Gold companies and have pointed to other evidence on the record to argue that these companies were uncreditworthy for the period 2006 through 2008. We are still analyzing this data to determine if they provide a reasonable basis to believe or suspect that the Gold companies were uncreditworthy during 2006 through 2008. If we determine to investigate the Gold companies' creditworthiness for the 2006 through 2008 period, we will make a preliminary finding on this matter prior to our final determination and will provide the parties with an opportunity to comment on that preliminary finding.

No creditworthiness allegation was made with respect to the Sun Paper companies.

**Analysis of Programs**

Based upon our analysis of the petition and the responses to our questionnaires, we preliminarily determine the following:

**I. Programs Preliminarily Determined To Be Countervailable**

**A. Preferential Lending To The Coated Paper Industry**

*1. Policy Loans to Coated Paper Producers and Related Pulp Producers from State–Owned Commercial Banks and Government Policy Banks*

In the CVD investigation of coated free sheet paper, the Department found that, "the GOC has a policy in place to encourage and support the growth and development of the paper industry through preferential financing initiatives, as illustrated in the five–year plans and industrial policies on the record."[9] The Department further determined that, "loans provided by Policy Banks and state–owned commercial banks ("SOCBs") in the PRC constitute a direct financial contribution from the government " In *LWTP from the PRC*, the Department affirmed its earlier finding and extended it through the POI.

Based on the record of the instant investigation, the Department preliminarily determines that the five–year plans and industrial policies cited in the CFS Decision Memorandum and LWTP Decision Memorandum continue to be in effect.[10] Specifically, the Tenth Five–Year and 2010 Special Plan for the Construction of National Forestry and Papermaking Integration Project;[11] the Development Policy for Papermaking Industry (2007);[12] the Decision of the State Council on Promulgating and Implementing the Provisional Regulation on Promoting Industrial Structure Adjustment GUOFA (2005) No. 40,[13] the Guiding Catalogue for Industry Restructuring (2005 version),[14] together indicate that the GOC has in place a policy to promote specifically the pulp and paper industry. Additionally, the five–year plans of

[9] *See* CFS Decision Memorandum at 9 and 49.

[10] *See* CFS Decision Memorandum at 9 - 11 and *LWTP from the PRC* and LWTP Decision Memorandum at 11 - 12.

[11] *See* Petition at Exhibit IV-34.

[12] *See* Petition at Exhibit IV-39.

[13] *See* GQR at Exhibit A-1.

[14] *See* GQR at Exhibit A-2.

provinces and municipalities where Respondents in this investigation are located provide evidence of sub–national government support for these objectives. For example:

*The Outline of the Tenth Five–year Plan (Jihua) of Social and Economic Development of Jiangsu Province:* In describing how it seeks to adjust the province's economic structure, the plan states " we will selectively develop such industries with local advantages, including modern papermaking " *See* GQR at A–3, Chapter II ("Adjustment of Economic Structure"), Section 5 ("Optimize Industrial Structure to Enhance Overall Competitiveness"), paragraph 12.

*Outline of the Eleventh Five–year Plan (Guihua) for Economic and Social Development of Jiangsu:* In describing its "Priorities in Development and Policy Making," this provincial plan states that Jiangsu will "push the efficiency" of the forest industry and, in developing its manufacturing industry, it will "lay emphasis upon the development of competitive industries. By setting up industrial bases of paper making, we shall increase shares of competitive industries in manufacturing " *See* GQR at A – 4, Volume III ("Priorities in Development and Policy Making"); Chapter V ("Industry Development"), Section 1 ("Developing Modern and Efficient Agriculture") and Section 2 ("Developing Advanced Manufacturing Industry").

*Tenth Five–year Plan (Jihua) of Social and Economic Development of Suzhou Municipality:* In describing the municipality's goals, the plan states " focus on the development of paper making " *See* GQR at A–5, Chapter 2 ("Economic Development"), Section 2 ("Industry").

*Outline of the Tenth Five–year Plan (Jihua) for Economic and Social Development of Zhenjiang:* In describing its goals for "Optimizing and enhancing the secondary industry industry," this plan specifically identifies respondent, Gold East (" strive to form super large enterprises which have annual sales amount over 5 billion yuan including Gold East Paper ") and names "paper and paper products processing" as "champion" products. *See* GQR at A–7, "Main direction and target of the development of the 10th Five–year' plan," Section 2 ("Giving prominence to the main line of structure adjustment, improving the overall economy quality").

*Notice from the People's Government of Zhenjiang on Issuing the "Guideline for the 11th Five–year Plan (Jihua) of Economy and Social Development of Zhenjiang:* Among its goals, this plan states that Zhenjiang will "Expand leading industries" including papermaking. *See* GQR at A–7, Chapter 7 ("Optimize Industrial Structure and Improve Quality of Economic Growth"), Section 1 ("Development of Manufacture Industries").

*Outline of Tenth Five–year Plan (Jihua) for Economic and Social Development of Shandong:* In describing this province's desire to "Promote the optimization and upgrade of traditional industries, this plan specifically addresses the papermaking industry and identifies numerous actions, including: make efforts to enhance product grades; cultivate large groups; and rely on large tracts of land suitable for forestation and key enterprises to build a 700 thousand ton hardwood pulp project." *See* GQR at A–8, "III. Emphasis on the industrial development and structural adjustment," "(7) Promote the optimization and upgrade of traditional industries," "6. Paper–making Industry."

*Outline of the Eleventh Five–year Plan (Guihua) for Economic and Social Development of Shandong:* This plan addresses both forestry and papermaking in its call to "accelerate building the forest base of industrial raw materials" and in identifying papermaking among the new material industries to be developed. *See* GQR at A–09, Chapter 5 ("Accelerate the Development of Modern Agriculture") and Chapter 6 ("Efforts on Construction of the Powerful Manufacture Industry Province").

*Outline of the Tenth Five–year Plan (Jihua) of Social and Economic Development of Jining Municipality:* This plan discusses reform of traditional industries including papermaking and describes as a goal developing coated paper. It also specifically names Sun Paper as among the producers to be supported in expanding, upgrading and constructing its forest–paper project. *See* GQR at A–10, "I. To vigorously develop modern manufacturing industry," "2. To reform traditional industries and shore up and foster emerging industries." Virtually identical language appears in the *Outline of the Eleventh Five–year Program (GUIHUA) of Social and Economic Development of Jining Municipality*. *See* GQR at A–11, "I. To vigorously develop modern manufacturing industry," "2. To reform traditional industries and shore up and foster emerging industries."

In *Citric Acid from the PRC*,[15] the Department stated:

> In general, the Department looks to whether government plans or other policy directives lay out objectives or goals for developing the industry and call for lending to support those objectives or goals. Where such plans or policy directives exist, then we will find a policy lending program that is specific to the named industry (or producers that fall under that industry). Once that finding is made, the Department relies upon the analysis undertaken in *CFS from the PRC* to further conclude that national and local government control over the SOCBs results in the loans being a financial contribution by the GOC.

In this investigation, the GOC has not provided evidence that would lead us to revisit our finding in *CFS from the PRC* regarding government control of the SOCBs.[16] Therefore, we preliminarily determine that the loans to Respondents from policy banks and SOCBs are a financial contribution in the form of a direct transfer of funds and that they provide a benefit equal to the difference between what the recipients paid on their loans and the amount they would have paid on comparable commercial loans. *See* sections 771(5)(D)(i) and 771(5)(E)(ii) of the Act. We further determine preliminarily that the loans are *de jure* specific within the meaning of section 771(5A)(D)(i) of the Act because of the GOC's policy demonstrated by the above–cited plans and directives to encourage and support the growth and development of the PRC pulp and paper industry.

To calculate the benefit under the policy lending program, we used the benchmarks described under "Subsidies Valuation - Benchmarks and Discount Rates" above. As noted in the "Creditworthiness" section above, we have determined the Gold companies to be uncreditwothy for the period 2003 through 2005; therefore, we have used an uncreditworthy benchmark as set forth under 19 CFR 351.505(a)(3)(iii) for loans approved in those years.

[15] *See* Citric Acid from the PRC Decision Memorandum at Comment 5 (citations omitted).

[16] *See* CFS Decision Memorandum at Comment 8.

For the paper producing Gold companies, we divided the benefit received during the POI by the combined sales of the Gold companies' paper producers. For the cross–owned input suppliers among the Gold companies, we divided the benefit by the combined sales of the Gold companies' paper producers that received the inputs plus the input suppliers' sales minus inter–company sales during the POI. For SMPI, we divided the benefit by its consolidated sales. We then summed the calculated rates.

For Yanzhou Tianzhang, we divided its benefit received during the POI by its sales during the POI. For Sun Paper, we divided the benefit by its consolidated sales. We then summed the calculated rates.

On this basis, we preliminarily determine that the Gold companies received a countervailable subsidy of 7.27 percent *ad valorem* and the Sun Paper companies received a countervailable subsidy of 0.94 percent *ad valorem*.

**B. Income Tax Programs**

*1. Income Tax Exemption/Reduction under the Two Free/Three Half Program*

Under Article 8 of the *FIE Tax Law*, a foreign–invested enterprise ("FIE") that is "productive" and is scheduled to operate for more than ten years may be exempted from income tax in the first two years of profitability and pay income taxes at half the standard rate for the next three years. *See* GQR at 34. The Department has previously found this program countervailable. *See*, *e.g.*, OCTG Decision Memorandum[17] at 16, CFS Decision Memorandum at 11 12, and Citric Acid from the PRC Decision Memorandum at 15–16.

GEP, GHS, GZC, GLC, JHF, JAP, JQZ, and JQY reported using this program during the POI. *See* GEQR at 34. Yanzhou Tianzhang also reported using this program during the POI. *See* YTQR at 13.

We preliminarily determine that the exemption or reduction of the income tax paid by productive FIEs under this program confers a countervailable subsidy. The exemption/reduction is a financial contribution in the form of revenue forgone by the GOC and it provides a benefit to the recipient in the amount of the tax savings. *See* section 771(5)(D)(ii) of the Act and 19 CFR 351.509(a)(1). We also preliminarily determine that the exemption/reduction afforded by this program is limited as a matter of law to certain enterprises, *i.e.*, "productive" FIEs and, hence, is specific under section 771(5A)(D)(i) of the Act. *See* CFS Decision Memorandum, at Comment 14.

To calculate the benefit, we treated the income tax savings enjoyed by GEP, GHS, GZC, GLC, JHF, JAP, JQZ, JQY, and Yanzhou Tianzhang as a recurring benefit, consistent with 19 CFR 351.524(c)(1). To compute the amount of the tax savings, we compared the income tax rate the above companies would have paid in the absence of the program (30 percent) with the income tax rate the company actually paid (15 or zero percent).

For the paper producing Gold companies, we divided the tax savings received during the POI by the combined sales of the Gold companies' paper producers. For the cross–owned input suppliers among the Gold companies, we divided the tax savings by the combined sales of the Gold companies' paper producers that receive the inputs plus the input suppliers' sales minus inter–company sales during the POI.

For Yanzhou Tianzhang, we divided its tax savings received during the POI by its sales during the POI.

On this basis, we preliminarily determine that the Gold companies received a countervailable subsidy of 1.37 percent *ad valorem* and Yanzhou Tianzhang received a countervailable subsidy of 1.46 percent *ad valorem* under this program.

*2. Local Income Tax Exemption and Reductions for "Productive" FIEs*

Under Article 9 of the *FIE Tax Law*, the provincial governments have the authority to exempt FIEs from the local income tax of three percent. *See* GQR at 56. According to the *Regulations on Exemption and Reduction of Local Income Tax of FIEs in Jiangsu Province*, a "productive" FIE in Jiangsu Province may be exempted from the three percent local income tax during the "Two Free, Three Half" period. Additionally, according to Article 6, FIEs eligible for the reduced income tax rate of 15 percent can also be exempted from paying local income tax. *See* GQR at Exhibit GOC–HH–3. According to the *Provisional Rules on Exemption of Local Income Tax for FIEs and Foreign* Enterprises (Decree 14 of Zhejiang Government, 1991) at Article 4, productive FIEs in Zhejiang Province are exempted from paying the local income tax for the first two years after their first profitable year, and pay at a reduced (half) rate for the next three consecutive years. *See* G1SR at Exhibit GOC–SUPP–35. The Department has previously found this program to be countervailable. *See*, *e.g.*, OCTG Decision Memorandum at 17 – 18, CFS Decision Memorandum at 12–13 and Citric Acid from the PRC Decision Memorandum at 21.

GEP, GHS, NBZH, GZC, GLC, GSC, JHP, JHF, JAP, JQZ, and JQY reported using this program during the POI. *See* GEQR at 39. Yanzhou Tianzhang also reported using this program during the POI. *See* YTQR at 14.

We preliminarily determine that the exemption from or reduction in the local income tax received by "productive" FIEs under this program confers a countervailable subsidy. The exemption or reduction is a financial contribution in the form of revenue forgone by the government and it provides a benefit to the recipient in the amount of the tax savings. *See* section 771(5)(D)(ii) of the Act and 19 CFR 351.509(a)(1). We also preliminarily determine that the exemption or reduction afforded by this program is limited as a matter of law to certain enterprises, *i.e.*, "productive" FIEs and, hence, is specific under section 771(5A)(D)(i) of the Act.

To calculate the benefit, we treated the income tax savings enjoyed by GEP, GHS, NBZH, GZC, GLC, GSC, JHP, JHF, JAP, JQZ, JQY, and Yanzhou Tianzhang as a recurring benefit, consistent with 19 CFR 351.524(c)(1). To compute the amount of the tax savings, we compared the income tax rate the above companies would have paid in the absence of the program (three percent) with the income tax rate the company actually paid.

For the paper producing Gold companies, we divided the tax savings received during the POI by the combined sales of the Gold companies' paper producers. For the cross–owned input suppliers among the Gold companies, we divided the tax savings by the combined sales of the Gold companies' paper producers that receive the inputs plus the input suppliers' sales minus inter–company sales during the POI. For Yanzhou Tianzhang, we divided its tax savings received during the POI by its sales during the POI.

On this basis, we preliminarily determine that the Gold companies received a countervailable subsidy of 0.36 percent *ad valorem* and Yanzhou Tianzhang received a countervailable subsidy of 0.31 percent *ad valorem* under this program.

[17] *See Certain Oil Country Tubular Goods From the People's Republic of China: Final Affirmative Countervailing Duty Determination, Final Negative Critical Circumstances Determination*, 74 FR 64045 (December 7, 2009) and accompanying Issues and Decision Memorandum ("OCTG Decision Memorandum").

*3. Income Tax Reduction for FIEs Purchasing Domestically Produced Equipment*

The GOC responded that the program does not exist. *See* GQR at 68. However, Yanzhou Tianzhang reported that it received benefits under this program during the POI and referenced the relevant law, "Notice of the Ministry of Finance and the State Administration of Taxation concerning the Issue of Tax Credit for Enterprise Income Tax for Domestic Equipment Purchased by Foreign–funded Enterprises." *See* YTQR at 15.

In its questionnaire response, the GOC stated that this alleged subsidy program does not exist. *See* GQR at 68. In our supplemental questionnaire to the GOC, we noted that Yanzhou Tianzhang reported using this program and that the Department had previously found this program to be countervailable in *Citric Acid from the PRC*. *See* Citric Acid from the PRC Decision Memorandum at 16 – 17. The GOC responded that Yanzhou Tianzhang may have been confused between the terms "reduction" and "credit" and that no such program exists.

Yanzhou Tianzhang claims to have received a tax reduction under this program. Moreover, as noted above, the Department previously found this program to confer a countervailable subsidy and the GOC has provided no evidence showing that this program has been terminated. Accordingly, we are following our previous practice and preliminarily determine that Yanzhou Tianzhang received a countervailable benefit during the POI.

The tax credits are a financial contribution in the form of revenue forgone by the government and provide a benefit to the recipients in the amount of the tax savings. *See* section 771(5)(D)(ii) of the Act and 19 CFR 351.509(a)(1). We further determine that these tax credits are contingent upon use of domestic over imported goods and, hence, are specific under section 771(5A)(A) and (C) of the Act.

To calculate the benefit, we treated the income tax savings enjoyed by Yanzhou Tianzhang as a recurring benefit, consistent with 19 CFR 351.524(c)(1), and divided the company's tax savings by its sales during the POI, pursuant to 19 CFR 351.525(b)(3).

On this basis, we preliminarily determine that Yanzhou Tianzhang received a countervailable subsidy of 0.78 percent *ad valorem* under this program.

*4. Income Tax Subsidies for FIEs Based on Geographic Location*

To promote economic development and attract foreign investment, "productive" FIEs located in coastal economic zones, special economic zones or economic and technical development zones in the PRC receive preferential tax rates of 15 percent or 24 percent, depending on the zone, under Article 7 of the *FIE Tax Law*. *See* GQR, at 70. This program was created June 15, 1988, pursuant to the *Provisional Rules on Exemption and Reduction of Corporate Income Tax and Business Tax of FIEs in Coastal Economic Development Zone* issued by the Ministry of Finance and the July 1, 1991, *FIE Tax Law* continued this policy. The Department has previously found this program to be countervailable. *See* Citric Acid from the PRC Decision Memorandum at 14 - 15 and CFS Decision Memorandum at 12.

GEP, GHS, NBZH, GZC, GLC, GSC, JHP, JQZ, and JQY reported using this program during the POI. *See* GEQR at 45

We preliminarily determine that the reduced income tax rate paid by productive FIEs under this program confers a countervailable subsidy. The reduced rate is a financial contribution in the form of revenue forgone by the GOC and it provides a benefit to the recipient in the amount of the tax savings. *See* section 771(5)(D)(ii) of the Act and 19 CFR 351.509(a)(1). We further determine preliminarily that the reduction afforded by this program is limited to enterprises located in designated geographic regions and, hence, is specific under section 771(5A)(D)(iv) of the Act.

To calculate the benefit, we treated the income tax savings enjoyed by GEP, GHS, NBZH, GZC, GLC, GSC, JHP, JQZ, and JQY as a recurring benefit, consistent with 19 CFR 351.524(c)(1). To compute the amount of the tax savings, we compared the income tax rate the above companies would have paid in the absence of the program (30 percent) with the income tax rate the company actually paid (24 or 15 percent).

For the paper producing Gold companies, we divided the tax savings received during the POI by the combined sales of the Gold companies' paper producers. For the cross–owned input suppliers among the Gold companies, we divided the tax savings by the combined sales of the Gold companies' paper producers that receive the inputs plus the input suppliers' sales minus inter–company sales during the POI.

On this basis, we preliminarily determine that the Gold companies received a countervailable subsidy of 1.79 percent ad valorem under this program.

*5. Preferential Tax Policies for Research and Development ("R&D") at FIEs*

According to the *Circular on Relevant Issues relating to Using R&D Expenses to Deduct Taxable Income by FIEs* (GUOSHUIFA {1999} No. 173), an FIE may deduct 150 percent of its qualifying R&D expenses from its taxable income when those expenses increase by 10 percent over R&D expenses incurred in the last tax year. The deduction is capped by taxable income and no carry–forward is allowed if the deduction is more than the taxable income of the current period. *See* GQR at 82.

GEP reported using this program during the POI. *See* GEQR at 52.

We preliminarily determine that the exemption from or reduction in the income tax received by FIEs under this program confers a countervailable subsidy. The exemption or reduction is a financial contribution in the form of revenue forgone by the government and it provides a benefit to the recipient in the amount of the tax savings. *See* section 771(5)(D)(ii) of the Act and 19 CFR 351.509(a)(1). We also preliminarily determine that the exemption or reduction afforded by this program is limited as a matter of law to certain enterprises, *i.e.*, "productive" FIEs and, hence, is specific under section 771(5A)(D)(i) of the Act.

To calculate the benefit, we treated the income tax savings enjoyed by GEP as a recurring benefit, consistent with 19 CFR 351.524(c)(1). We divided their tax savings received during the POI by the combined sales of the Gold companies' paper producers minus inter–company sales during the POI.

On this basis, we preliminarily determine that the Gold companies received a countervailable subsidy of 0.02 percent *ad valorem* under this program.

**C. Indirect Tax and Import Tariff Programs**

*1. Value–Added Tax ("VAT") and Tariff Exemptions on Imported Equipment*

Enacted in 1997, the *Circular of the State Council on Adjusting Tax Policies on Imported Equipment* (*GUOFA No. 37*) exempts both FIEs and certain domestic enterprises from the VAT and tariffs on imported equipment used in their production so long as the equipment does not fall into prescribed lists of non–eligible items. Qualified enterprises receive a certificate either

from the National Development and Reform Commission or its provincial branch. To receive the exemptions, qualified enterprises must adequately document both the product eligibility and the eligibility of the imported article to the local Customs authority. *See* GQR at 96–97. The Department has previously found this program to be countervailable. *See* Citric Acid from the PRC Decision Memorandum at 19 - 20 and CFS Decision Memorandum at 14.

GEP, GHS, NBZH, NAPP, GZC, GLC, GSC, JHP, and JAP reported using this program. *See* GEQR at 63. Yanzhou Tianzhang reported using this program. *See* YTQR at 20.

We preliminarily determine that VAT and tariff exemptions on imported equipment confer a countervailable subsidy. The exemptions are a financial contribution in the form of revenue forgone by the GOC and they provide a benefit to the recipients in the amount of the VAT and tariff savings. *See* section 771(5)(D)(ii) of the Act and 19 CFR 351.510(a)(1). We further determine the VAT and tariff exemptions under this program are specific under section 771(5A)(D)(i) because the program is limited to certain enterprises, *i.e.*, FIEs and domestic enterprises with government–approved projects. *See* CFS Decision Memorandum, at Comment 16.

Normally, we treat exemptions from indirect taxes and import charges, such as the VAT and tariff exemptions, as recurring benefits, consistent with 19 CFR 351.524(c)(1), and expense these benefits in the year in which they were received. However, when an indirect tax or import charge exemption is provided for, or tied to, the capital structure or capital assets of a firm, the Department may treat it as a non–recurring benefit and allocate the benefit to the firm over the AUL. *See* 19 CFR 351.524(c)(2)(iii) and 19 CFR 351.524(d)(2).

For GEP, GHS, NBZH, NAPP, GZC, GLC, GSC, JHP, JAP, and Yanzhou Tianzhang, we applied the "0.5 test," pursuant to 19 CFR 351.524, for each of the years in which exemptions were reported (treating year of receipt as year of approval). For the years in which the amount was less than 0.5 percent, we have expensed the exempted amounts in the year of receipt, consistent with 19 CFR 351.524(a). For those years in which the VAT and tariff exemptions were greater than or equal to 0.5 percent, we are treating the exemptions as non–recurring benefits, consistent with 19 CFR 351.524(c)(2)(iii), and allocating the benefits over the AUL. We used the discount rate described above in the "Benchmarks and Discount Rates" section to calculate the amount of the benefit for the POI.

For the paper producing Gold companies, we divided the benefits received in or allocated to the POI by the combined sales of the Gold companies' paper producers. For the cross–owned input suppliers among the Gold companies, we divided the benefits received in or allocated to the POI by the combined sales of the Gold companies' paper producers that receive the inputs plus the input suppliers' sales minus inter–company sales during the POI.

For Yanzhou Tianzhang, we divided the benefits received in or allocated to the POI by its sales during the POI.

On this basis, we preliminarily determine that the Gold companies received a countervailable subsidy of 0.83 percent *ad valorem* and Yanzhou Tianzhang does not have a measurable subsidy under this program.

*2. VAT Rebates on Domestically Produced Equipment*

As outlined in *GUOSHUIFA (1999) No. 171, Notice of the State Administration of Taxation Concerning the Trial Administrative Measures on Purchase of Domestically Produced Equipment by FIEs*, the GOC refunds the VAT on purchases of certain domestically produced equipment to FIEs if the purchases are within the enterprise's investment amount and if the equipment falls under a tax–free category. *See* GQR at 111. The Department has previously found this program to be countervailable. *See* Citric Acid from the PRC Decision Memorandum at 20 and CFS Decision Memorandum at 13 – 14.

GEP, GHS, NBZH, NAPP, GZC, GLC, JHP, and JAP reported using the program. See GEQR at 67.

We preliminarily determine that the rebate of the VAT paid on purchases of domestically produced equipment by FIEs confers a countervailable subsidy. The rebates are a financial contribution in the form of revenue forgone by the GOC and they provide a benefit to the recipients in the amount of the tax savings. *See* section 771(5)(D)(ii) of the Act and 19 CFR 351.510(a)(1). We further preliminarily determine that the VAT rebates are contingent upon the use of domestic over imported goods and, hence, specific under section 771(5A)(A) and (C) of the Act.

Normally, we treat exemptions from indirect taxes and import charges, such as VAT rebates, as recurring benefits, consistent with 19 CFR 351.524(c)(1), and expense these benefits in the year they were received. However, when an indirect tax or import charge exemption is provided for, or tied to, the capital structure or capital assets of a firm, the Department may treat it as a non–recurring benefit and allocate the benefit to the firm over the AUL. *See* 19 CFR 351.524(c)(2)(iii) and 19 CFR 351.524(d)(2).

For GEP, GHS, NBZH, NAPP, GZC, GLC, JHP, and JAP, we applied the "0.5 test," pursuant to 19 CFR 351.524, for each of the years in which rebates were reported (treating year of receipt as year of approval). For the years in which the amount was less than 0.5 percent, we have expensed the rebates in the year of receipt, consistent with 19 CFR 351.524(a). For those years in which the VAT rebates were greater than or equal to 0.5 percent, we preliminarily determine that the VAT and tariff exemptions were for capital equipment based on the companies' information. *See* GEQR at 69. Therefore, we are treating the rebates as non–recurring benefits, consistent with 19 CFR 351.524(c)(2)(iii), and allocating the benefits over the AUL. We used the discount rate described above in the "Benchmarks and Discount Rates" section to calculate the amount of the benefit for the POI.

For the paper producing Gold companies, we divided the benefits received in or allocated to the POI by the combined sales of the Gold companies' paper producers. For the cross–owned input suppliers among the Gold companies, we divided the benefits received in or allocated to the POI by the combined sales of the Gold companies' paper producers that receive the inputs plus the input suppliers' sales minus inter–company sales during the POI.

On this basis, we preliminarily determine that the Gold companies received a countervailable subsidy of 0.22 percent *ad valorem* under this program.

*3. Domestic VAT Refunds for Companies Located in the Hainan Economic Development Zone ("EDZ")*

According to "Circular on Publication of the Preferential Policies for Hainan Province Yangpu Economic Development Zone (QIONGFU {1999} No.54)," enterprises may receive VAT refunds based on level of investment. *See* GSR at 19 and GEQR at 71. The program was previously found countervailable. *See* CFS Decision Memorandum at 15.

JHP reported using the program during the POI. *See* GEQR at 71.

We preliminarily determine that the domestic VAT refund confers a countervailable subsidy. The refund is a financial contribution in the form of

revenue forgone by the local government and it provides a benefit to the recipient in the amount of the refunded taxes. *See* section 771(5)(D)(ii) of the Act and 19 CFR 351.510(a)(1). We further preliminarily determine that the program is limited to enterprises located in a designated geographical region and, hence, is specific under section 771(5A)(D)(iv) of the Act.

To calculate the benefit, we treated the VAT refund enjoyed by JHP as a recurring benefit, consistent with 19 CFR 351.524(c)(1). We divided the amount received during the POI by the combined sales of JHP and the Gold companies' paper producers that received the inputs from JHP minus inter–company sales during the POI.

On this basis, we preliminarily determine that the Gold companies received a countervailable subsidy of 0.40 percent *ad valorem* under this program.

*4. Exemption from City Maintenance and Construction Taxes and Education Surcharges for FIEs*[18]

SMPI, GEP, GHS, NBZH, NAPP, GZC, GLC, GSC, JHP, and JAP stated that FIEs are, by law, not subject to these taxes and surcharges, and these companies reported what they would have paid during the POI had they been subject to them. *See* GEQR at 94. Yanzhou Tianzhang stated it did not use the program during the POI. *See* YTQR at 19.

The GOC reported that FIEs do not pay these taxes and surcharges. *See* GQR at 94. In the G1QSR, the GOC responded to our follow–up question regarding this program stating that because FIEs are not subject to these taxes and surcharges, they have not received an exemption from them. *See* G1SQR at 4.

We preliminarily determine that the exemptions from the city maintenance and construction taxes and education surcharges confer a countervailable subsidy. The exemptions are financial contributions in the form of revenue forgone by the government and provide a benefit to the recipient in the amount of the savings. *See* section 771(5)(D)(ii) of the Act and 19 CFR 351.509(a)(1). We also determine that the exemptions afforded by this program are limited as a matter of law to certain enterprises, FIEs and, hence, specific under section 771(5A)(D)(i) of the Act.

For the paper producing Gold companies, we divided the tax savings received in the POI by the combined sales of the Gold companies' paper producers. For the cross–owned input suppliers among the Gold companies, we divided the tax savings received in the POI by the combined sales of the Gold companies' paper producers that received the inputs plus the input suppliers' sales minus inter–company sales during the POI.

As stated above, Yanzhou Tianzhang claimed not to use this program during the POI. However, proprietary information on the record indicates otherwise, although that information does not allow us to calculate Yanzhou Tianzhang's subsidy. *See* YTQR at Appendix 6. Therefore, as explained under the "Use of Facts Otherwise Available and Adverse Inferences" section above, we have assigned to Yanzhou Tianzhang the rate calculated for the Gold companies for this preliminary determination. We intend to seek further information from Yanzhou Tianzhang for use in our final determination.

On this basis, we preliminarily determine that the Gold companies received a countervailable subsidy of 0.43 percent *ad valorem* and that Yanzhou Tianzhang received a countervailable subsidy of 0.43 percent *ad valorem* under this program.

**D. Government Provision of Goods and Services for Less than Adequate Remuneration**

*1. Provision of Electricity*

For the reasons explained in the "Use of Facts Otherwise Available and Adverse Facts Available" section above, we are basing our determination regarding the government's provision of electricity in part on adverse facts available.

In a CVD case, the Department requires information from both the government of the country whose merchandise is under investigation and the foreign producers and exporters. When the government fails to provide requested information concerning alleged subsidy programs, the Department, as adverse facts available, typically finds that a financial contribution exists under the alleged program and that the program is specific. *See, e.g., Certain Kitchen Shelving and Racks from the People's Republic of China: Final Affirmative Countervailing Duty Determination*, 74 FR 37012 (July 27, 2009) and accompanying Issues and Decision Memorandum at 17 "F. Government Provision of Electricity for Less than Adequate Remuneration" and OCTG Decision Memorandum at 22 "K. Provision of Electricity for Less than Adequate Remuneration." However, where possible, the Department will normally rely on the responsive producer's or exporter's records to determine the existence and amount of the benefit to the extent that those records are useable and verifiable.

Consistent with this practice, the Department finds that the GOC's provision of electricity confers a financial contribution, under section 771(5)(D)(iii) of the Act, and is specific, under section 771(5A) of the Act. To determine the existence and amount of any benefit from this program, we relied on the companies' reported information on the amounts of electricity they purchased and the amounts they paid for electricity during the POI. We compared the rates paid by the companies who sourced electricity from the grid, SMPI, NBZH, NAPP, JHP, JAP, JGF, JQZ, JQY, JHF, JSG, YJGS, LZGS, GZGS, and WSGWS, to the highest rates that they would have paid in the PRC during the POI. Specifically, we have used the highest peak, valley and normal rates for the Gold companies based upon their user category. This benchmark reflects the adverse inference we have drawn as a result of the GOC's failure to act to the best of its ability in providing requested information about its provision of electricity in this investigation.

On this basis, we preliminarily determine that the Gold companies received a countervailable subsidy of 0.14 percent *ad valorem* under this program. The Sun Paper companies did not purchase electricity from the government grid during the POI. Therefore, we preliminarily determine that the Sun Paper companies did not use this program during the POI.

**II. Programs Preliminarily Determined To Be Not Used By Respondents or To Not Provide Benefits During the POI**

A. Famous Brands Awards

GHS reported receiving a famous brand award from the local government in 2006. *See* GEQR at 79.

We preliminarily determine that the total amount of the grant was less than 0.5 percent of the paper–producing Gold companies' sales in 2006. Therefore, we have preliminarily expensed the benefit in 2006 pursuant to 19 CFR 351.524(b)(2) and we preliminarily determine that the Gold companies received no benefit from this program during the POI. As a result, we have not made a determination with respect to whether this program provided a countervailable subsidy.

Based upon responses by the GOC, the Gold companies, and the Sun Paper companies, we preliminarily determine

[18] This program was incorrectly listed as an income tax program in our Initiation Checklist.

that the Gold companies and the Sun Paper companies did not apply for or receive benefits during the POI under the programs listed below.

B. Preferential Lending To The Coated Paper Industry

1. *Fast–Growth High–Yield Forestry Program Loans*

C. Income Tax Programs

1. *Preferential Tax Policies for Technology or Knowledge–Intensive FIEs*
2. *Preferential Tax Programs for FIEs that are High or New Technology Enterprises*
3. *Income Tax Reductions for High–Technology Industries in Guangdong Province*
4. *Income Tax Credits for Domestically Owned Companies Purchasing Domestically Produced Equipment*
5. *Income Tax Exemption Program for Export–Oriented FIEs*
6. *Corporate Income Tax Refund Program for Reinvestment of FIE Profits in Export–Oriented Enterprises*

D. Grant Programs

1. *Funds for Forestry Plantation Construction and Management*
2. *The State Key Technologies Renovation Project Fund*
3. *Loan Interest Subsidies for Major Industrial Technology Reform Projects in Wuhan*
4. *Funds for Water Treatment Improvement Projects in the Songhuajiang Basin*
5. *Special Fund for Energy Saving Technology Reform in Wuhan and Shouguang Municipality*
6. *Clean Production Technology Fund*

E. Economic Development Zone Programs

1. *Subsidies in the Nanchang EDZ*
2. *Subsidies in the Wuhan EDZ*
3. *Subsidies in the Zhenjiang EDZ*

**III. Programs for Which More Information Is Required**

A. Government Provision of Goods and Services for Less than Adequate Remuneration

1. *Provision of Papermaking Chemicals*

As explained under "Use of Facts Otherwise Available and Adverse Inferences," we plan to seek additional information, including information about the GOC's ownership classifications of the producers of papermaking chemicals, other ways in which the GOC may influence the markets for these papermaking chemicals in the PRC, and other requested data that the GOC identified as "NA."

B. Subsidies in the Yangpu EDZ

The Gold companies reported that JHP obtained land–use rights from Dan Zhou city authorities, Hainan Yangpu Development Company and Hainan Yangpu Land Development Company. *See* GEQR at 88 – 90. In the GSR, the GOC stated JHP is located in the Yangpu EDZ, but did not purchase land–use rights from the land administrative authority from December 11, 2001 to the end of 2008. On February 22, 2010, the Gold companies submitted corrections and clarifications to their questionnaire responses and stated that the land obtained from Dan Zhou city is adjacent to, but outside of the Yanpu EDZ. *See* GECS at 3 – 4.

Based on our examination of these claims and the proprietary documentation regarding these land–use rights submitted by the GOC and Gold companies, we have found inconsistencies that we are unable to clarify at this time. *See* "Gold Companies Preliminary Calculation Memorandum". Therefore, we intend to seek additional information and clarification from the Gold companies and the GOC following the preliminary determination.

**Verification**

In accordance with section 782(i)(1) of the Act, we will verify the information submitted by Respondents prior to making our final determination.

**Suspension of Liquidation**

In accordance with section 703(d)(1)(A)(i) of the Act, we have calculated a rate for each individually investigated producer/exporter of the subject merchandise. Section 705(c)(5)(A)(i) of the Act states that for companies not investigated, we will determine an "all others" rate equal to the weighted average countervailable subsidy rates established for exporters and producers individually investigated, excluding any zero and *de minimis* countervailable subsidy rates, and any rates determined entirely under section 776 of the Act.

Notwithstanding the language of section 705(c)(5)(A)(i) of the Act, we have not calculated the "all others" rate by weight averaging the rates of GEP and Yanzhou Tianzhang, because doing so risks disclosure of proprietary information. Therefore, we have calculated a simple average of the two responding firms' rates.

We preliminarily determine the total estimated net countervailable subsidy rates to be:

| Exporter/Manufacturer | Net Subsidy Rate |
|---|---|
| Gold East Paper (Jiangsu) Co., Ltd, Gold Huasheng Paper Co., Ltd., Gold East Trading (Hong Kong) Company Ltd., Ningbo Zhonghua Paper Co., Ltd., and Ningbo Asia Pulp & Paper Co., Ltd. | 12.83 |
| Shandong Sun Paper Industry Joint Stock Co., Ltd. and Yanzhou Tianzhang Paper Industry Co., Ltd. | 3.92 |
| All Others | 8.38 |

In accordance with sections 703(d)(1)(B) and (d)(2) of the Act, we are directing U.S. Customs and Border Protection ("CBP") to suspend liquidation of all entries of coated paper from the PRC that are entered, or withdrawn from warehouse, for consumption on or after the date of the publication of this notice in the **Federal Register**, and to require a cash deposit or bond for such entries of merchandise in the amounts indicated above.

**ITC Notification**

In accordance with section 703(f) of the Act, we will notify the ITC of our determination. In addition, we are making available to the ITC all non–privileged and non–proprietary information relating to this investigation. We will allow the ITC access to all privileged and business proprietary information in our files, provided the ITC confirms that it will not disclose such information, either publicly or under an administrative protective order, without the written consent of the Assistant Secretary for Import Administration.

In accordance with section 705(b)(2) of the Act, if our final determination is affirmative, the ITC will make its final determination within 45 days after the Department makes its final determination.

**Disclosure and Public Comment**

In accordance with 19 CFR 351.224(b), we will disclose to the parties the calculations for this preliminary determination within five days of its announcement. Due to the anticipated timing of verification and issuance of verification reports, case briefs for this investigation must be submitted no later than one week after the issuance of the last verification report. *See* 19 CFR 351.309(c) (for a further discussion of case briefs). Rebuttal briefs must be filed within five

days after the deadline for submission of case briefs, pursuant to 19 CFR 351.309(d)(1). A list of authorities relied upon, a table of contents, and an executive summary of issues should accompany any briefs submitted to the Department. Executive summaries should be limited to five pages total, including footnotes. *See* 19 CFR 351.309(c)(2) and (d)(2).

Section 774 of the Act provides that the Department will hold a public hearing to afford interested parties an opportunity to comment on arguments raised in case or rebuttal briefs, provided that such a hearing is requested by an interested party. *See also* 19 CFR 351.310(c). If a request for a hearing is made in this investigation, the hearing will be held two days after the deadline for submission of the rebuttal briefs, pursuant to 19 CFR 351.310(d), at the U.S. Department of Commerce, 14th Street and Constitution Avenue, N.W., Washington, D.C. 20230. Parties should confirm by telephone the time, date, and place of the hearing 48 hours before the scheduled time.

Interested parties who wish to request a hearing, or to participate if one is requested, must submit a written request to the Assistant Secretary for Import Administration, U.S. Department of Commerce, Room 1870, 14th Street and Constitution Avenue, N.W., Washington, DC 20230, within 30 days of the publication of this notice, pursuant to 19 CFR 351.310(c). Requests should contain: (1) the party's name, address, and telephone; (2) the number of participants; and (3) a list of the issues to be discussed. Oral presentations will be limited to issues raised in the briefs. *See id.*

This determination is published pursuant to sections 703(f) and 777(i) of the Act.

Dated: March 1, 2010.

**Carole A. Showers,**

*Acting Deputy Assistant Secretary for Import Administration.*

[FR Doc. 2010–5007 Filed 3–8–10; 8:45 am]

**BILLING CODE 3510–DS–S**

## COMMITTEE FOR PURCHASE FROM PEOPLE WHO ARE BLIND OR SEVERELY DISABLED

### Appointments to Performance Review Board for Senior Executive Service

**AGENCY:** Committee for Purchase From People Who Are Blind or Severely Disabled.

**ACTION:** Appointment of Performance Review Board for Senior Executive Service.

**SUMMARY:** The Committee For Purchase from People Who Are Blind Or Severely Disabled (Committee) has announced the following appointments to the Committee Performance Review Board.

The following individuals are appointed as members of the Committee Performance Review Board responsible for making recommendations to the appointing and awarding authorities on performance appraisal ratings and performance awards for Senior Executive Service employees:

Perry E. Anthony, Ph.D., Deputy Commissioner, Rehabilitation Services Administration, Department of Education.

Abram Claude, Jr., Private Citizen

Paul M. Laird, Assistant Director, Industries, Education and Vocational Training and Chief Operating Officer/FPI, Department of Justice.

All appointments are made pursuant to Section 4314 of Chapter 43 of Title 5 of the United States Code.

**DATES:** *Effective Date:* March 10, 2010.

**FOR FURTHER INFORMATION CONTACT:** Patricia Briscoe, Telephone: (703) 603–7740, Fax: (703) 603–0655, or e-mail *CMTEFedReg@abilityone.gov.*

**Patricia Briscoe,**

*Deputy Director, Business Operations.*

[FR Doc. 2010–4919 Filed 3–8–10; 8:45 am]

**BILLING CODE P**

## DEPARTMENT OF DEFENSE

### Office of the Secretary

### Meeting of the Uniform Formulary Beneficiary Advisory Panel

**AGENCY:** Assistant Secretary of Defense (Health Affairs), DoD.

**ACTION:** Notice of meeting.

**SUMMARY:** Under the provisions of the Federal Advisory Committee Act of 1972 (5 U.S.C., Appendix) and the Government in the Sunshine Act of 1976 (5 U.S.C. 552b) the Department of Defense announces that the Uniform Formulary Beneficiary Advisory Panel (hereafter referred to as the Panel) will meet on March 25, 2010.

**DATES:** The meeting will be held on March 25, 2010, from 8 a.m. to 5 p.m and will be open to the public from 9 a.m. to 5 p.m.

**ADDRESSES:** The meeting will be held at the Naval Heritage Center Theater, 701 Pennsylvania Avenue, NW., Washington, DC 20004.

**FOR FURTHER INFORMATION CONTACT:** Lieutenant Colonel Thomas Bacon, Designated Federal Officer, Uniform Formulary Beneficiary Advisory Panel, 5111 Leesburg Pike, Skyline 5, Suite 810, Falls Church, VA 22041–3206, Telephone: (703) 681–2890 Fax: (703) 681–1940, E-mail: *Baprequests@tma.osd.mil.*

**SUPPLEMENTARY INFORMATION:**

#### Purpose of Meeting

The Panel will review and comment on recommendations made to the Director, TRICARE Management Activity, by the Pharmacy and Therapeutics Committee regarding the Uniform Formulary.

#### Meeting Agenda

Sign-In; Welcome and Opening Remarks; Public Citizen Comments; Scheduled Therapeutic Class Reviews—Basal Insulins; Antihemophilic Factors; Designated Newly Approved Drugs and Drugs recommended for non-formulary placement due to non-compliance with Fiscal Year 2008, National Defense Authorization Act, Section 703; Panel Discussions and Vote, and comments following each therapeutic class review.

#### Meeting Accessibility

Pursuant to 5 U.S.C. 552b, as amended, and 41 CFR 102–3.140 through 102–3.165, and the availability of space this meeting is open to the public from 9 a.m. to 5 p.m. Seating is limited and will be provided only to the first 220 people signing in. All persons must sign in legibly.

#### Administrative Work Meeting

Prior to the public meeting the Panel will conduct an Administrative Work Meeting from 8 a.m. to 9 a.m. to discuss administrative matters of the Panel. The Administrative Work Meeting will be held at the Naval Heritage Center, 701 Pennsylvania Avenue, NW., Washington, DC, 20004. Pursuant to 41 CFR 102–3.160, the Administrative Work Meeting will be closed to the public.

#### Written Statements

Pursuant to 41 CFR 102–3.105(j) and 102–3.140, the public or interested organizations may submit written statements to the membership of the Panel at any time or in response to the stated agenda of a planned meeting. Written statements should be submitted to the Panel's Designated Federal Officer. The Designated Federal Officer's contact information can be obtained from the General Services Administration's Federal Advisory Committee Act Database—*https://www.fido.gov/facadatabase/public.asp.*

Written statements that do not pertain to the scheduled meeting of the Panel

may be submitted at any time. However, if individual comments pertain to a specific topic being discussed at a planned meeting, then these statements must be submitted no later than 5 business days prior to the meeting in question. The Designated Federal Officer will review all submitted written statements and provide copies to all the committee members.

**Public Comments**

In addition to written statements, the Panel will set aside 1 hour for individuals or interested groups to address the Panel. To ensure consideration of their comments, individuals and interested groups should submit written statements as outlined in this notice; but if they still want to address the Panel, then they will be afforded the opportunity to register to address the Panel. The Panel's Designated Federal Officer will have a "Sign-Up Roster" available at the Panel meeting, for registration on a first-come, first-serve basis. Those wishing to address the Panel will be given no more than 5 minutes to present their comments, and at the end of the 1-hour time period no further public comments will be accepted. Anyone who signs up to address the Panel but is unable to do so due to the time limitation may submit their comments in writing; however, they must understand that their written comments may not be reviewed prior to the Panel's deliberation. Accordingly, the Panel recommends that individuals and interested groups consider submitting written statements instead of addressing the Panel.

**Waiver**

Due to internal DoD difficulties, beyond the control of the Uniform Formulary Beneficiary Advisory Panel or its Designated Federal Officer, the Government was unable to process the **Federal Register** notice for the March 25, 2010, meeting of the Uniform Formulary Beneficiary Advisory Panel as required by 41 CFR 102–3.150(a). Accordingly, the Committee Management Officer for the Department of Defense, pursuant to 41 CFR 102–3.150(b), waives the 15-calendar day notification requirement.

Dated: March 3, 2010.

**Mitchell S. Bryman,**

*Alternate OSD Federal Register Liaison Officer, Department of Defense.*

[FR Doc. 2010–4954 Filed 3–8–10; 8:45 am]

BILLING CODE 5001–06–P

## DEPARTMENT OF DEFENSE

### Defense Acquisition Regulations System

**[OMB Control Number 0704–0441]**

### Information Collection Requirement; Defense Federal Acquisition Regulation Supplement; Notification Requirements for Critical Safety Items

**AGENCY:** Defense Acquisition Regulations System, Department of Defense (DoD).

**ACTION:** Notice and request for comments regarding a proposed extension of an approved information collection requirement.

**SUMMARY:** In compliance with section 3506(c)(2)(A) of the Paperwork Reduction Act of 1995 (44 U.S.C. Chapter 35), DoD announces the proposed extension of a public information collection requirement and seeks public comment on the provisions thereof. DoD invites comments on: (a) Whether the proposed collection of information is necessary for the proper performance of the functions of DoD, including whether the information will have practical utility; (b) the accuracy of the estimate of the burden of the proposed information collection; (c) ways to enhance the quality, utility, and clarity of the information to be collected; and (d) ways to minimize the burden of the information collection on respondents, including the use of automated collection techniques or other forms of information technology. The Office of Management and budget (OMB) has approved this information collection for use through March 31, 2010. DoD proposes that OMB extend its approval for these collections to expire three years after the approval date.

**DATES:** DoD will consider all comments received by May 10, 2010.

**ADDRESSES:** You may submit comments, identified by OMB Control Number 0704–0441, using any of the following methods:

○ *Federal eRulemaking Portal: http://www.regulations.gov.* Follow the instructions for submitting comments.

○ *E-mail: dfars@osd.mil.* Include OMB Control Number 0704–0441 in the subject line of the message.

○ *Fax:* 703–602–0350.

○ *Mail:* Defense Acquisition Regulations System, Attn: Ms. Mary Overstreet, OUSD(AT&L)DPAP(DARS), Room 3B855, 3060 Defense Pentagon, Washington, DC 20301–3060.

○ *Hand Delivery/Courier:* Defense Acquisition Regulations System, Crystal Square 4, Suite 200A, 241 18th Street, Arlington, VA 22202–3402.

Comments received generally will be posted without change to *http://www.regulations.gov,* including any personal information provided.

**FOR FURTHER INFORMATION CONTACT:** Ms. Mary Overstreet, 703–602–0311. The information collection requirements addressed in this notice are available on the World Wide Web at: *http://www.acq.osd.mil/dpap/dars/dfarspgi/current/index.html.* Paper copies are available from Ms. Mary Overstreet, OUSD(AT&L)DPAP(DARS), Room 3B855, 3060 Defense Pentagon, Washington, DC 20301–3060.

**SUPPLEMENTARY INFORMATION:**

*Title, and OMB Number:* Defense Federal Acquisition Regulation Supplement (DFARS) Notification Requirements for Critical Safety Items; OMB Control Number 0704–0441.

*Needs and Uses:* DoD needs this information to ensure that the Government receives timely notification of item nonconformances or deficiencies that could impact safety. The Procuring Contracting Officer (PCO) and the Administrative Contracting Officer (ACO) use the information to ensure that the customer is aware of potential safety issues in delivered products, has a basic understanding of the circumstances, and has a point of contact to begin addressing a mutually acceptable plan of action.

*Affected Public:* Businesses or other for-profit and not-for profit institutions.

*Annual Burden Hours:* 100.

*Number of Respondents:* 100.

*Responses per Respondent:* 1.

*Annual Responses:* 100.

*Average Burden per Response:* Approximately 1 hour.

*Frequency:* On occasion.

**Summary of Information Collection**

This information collection includes requirements relating to DFARS Part 246, Quality Assurance.

a. DFARS 246.371, Notification of Potential Safety Issues, prescribes use of the clause at DFARS 252.246–7003, Notification of Potential Safety Issues, to require DoD contractors to provide timely notification to the Government of any nonconformance or deficiency that could impact the safety of items acquired by or serviced for the Government.

b. DFARS 212.301(f)(xi) requires use of DFARS 252.246–7003 as prescribed in DFARS 246.371 for solicitations and contracts for the acquisition of commercial items.

c. DFARS 244.403 requires the use of DFARS 252.244–7000, Subcontracts for Commercial Items and Commercial Components (DoD Contracts), in

solicitations and contracts for supplies or services other than commercial items that contain the clause at DFARS 252.246–7003. DFARS 252.244–7000 requires that contractors include DFARS 252.246–7003 when applicable in subcontracts for commercial items or commercial components awarded at any tier under the contract.

**Ynette R. Shelkin,**

*Editor, Defense Acquisition Regulations System.*

[FR Doc. 2010–4990 Filed 3–8–10; 8:45 am]

BILLING CODE 5001–08–P

## ELECTION ASSISTANCE COMMISSION

### Sunshine Act Notice

**AGENCY:** U.S. Election Assistance Commission.

**ACTION:** Notice of Public Meeting Agenda.

**DATE AND TIME:** Thursday, March 11, 2010, 10 a.m.–12 p.m. EST.

**PLACE:** U.S. Election Assistance Commission, 1225 New York Ave, NW., Suite 150, Washington, DC 20005 (Metro Stop: Metro Center).

### Agenda

The Commission will hold a public meeting to discuss identifying and mitigating risk in elections operations. Commissioners will receive an update on re-accrediting Wyle Laboratories, Inc. Commissioners will consider other administrative matters.

Members of the public may observe but not participate in EAC meetings unless this notice provides otherwise. Members of the public may use small electronic audio recording devices to record the proceedings. The use of other recording equipment and cameras requires advance notice to and coordination with the Commission's Communications Office.*

* View *EAC Regulations Implementing Government in the Sunshine Act.*

This meeting and hearing will be open to the public.

**PERSON TO CONTACT FOR INFORMATION:** Bryan Whitener, Telephone: (202) 566–3100.

**Thomas R. Wilkey,**

*Executive Director, U.S. Election Assistance Commission.*

[FR Doc. 2010–5052 Filed 3–5–10; 11:15 am]

BILLING CODE 6820–KF–P

## DEPARTMENT OF ENERGY

### Blue Ribbon Commission on America's Nuclear Future

**AGENCY:** Department of Energy, Office of Nuclear Energy.

**ACTION:** Notice of open meeting.

**SUMMARY:** This notice announces an open meeting of the Blue Ribbon Commission on America's Nuclear Future (the Commission). The Commission was organized pursuant to the Federal Advisory Committee Act (Pub. L. 94–463, 86 Stat. 770) (the Act). The Act requires that agencies publish these notices in the **Federal Register**. The Charter of the Commission can be found at *http://www.energy.gov/news/documents/BRC_Charter.pdf.*

**DATES:** Thursday, March 25, 2010, 1 p.m.–5 p.m.; Friday, March 26, 2010, 8:30 a.m.–12 p.m.

**ADDRESSES:** Willard Intercontinental, 1401 Pennsylvania Avenue, Washington, DC 20004, (202) 628–9100.

**FOR FURTHER INFORMATION CONTACT:** Timothy A. Frazier, Designated Federal Officer, U.S. Department of Energy, 1000 Independence Avenue, SW., Washington, DC 20585; telephone (202) 586–4243 or facsimile (202) 586–0544; e-mail *CommissionDFO @nuclear.energy.gov.*

**SUPPLEMENTARY INFORMATION:**

*Background:* The President directed that the Blue Ribbon Commission on America's Nuclear Future (the Commission) be established to conduct a comprehensive review of policies for managing the back end of the nuclear fuel cycle. The Commission will provide advice and make recommendations on issues including alternatives for the storage, processing, and disposal of civilian and defense spent nuclear fuel and nuclear waste.

The Commission is composed of individuals of diverse backgrounds selected for their technical expertise and experience, established records of distinguished professional and pubic service, and their knowledge of issues pertaining to nuclear energy.

*Purpose of the Meeting:* Inform the Commission members about the history and current status of spent nuclear fuel and high-level waste disposal in the United States and projections of disposal needs in the future.

*Tentative Agenda:* The initial meeting is expected to include presentations on the history of efforts to dispose of civilian light-water reactor spent nuclear fuel (SNF) and defense high-level waste (HLW) in the United States. Presentations are also expected that will provide the status of the SNF and HLW (quantities and locations), projected generation rates for SNF associated with new nuclear plants, and projected quantities of defense HLW.

*Public Participation:* The meeting is open to the public. Individuals and representatives of organizations who would like to offer comments and suggestions may do so at the end of the meeting on Friday, March 26, 2010. Approximately 15 minutes will be reserved for public comments. Time allotted per speaker will depend on the number who wish to speak but will not exceed 5 minutes. The Designated Federal Officer is empowered to conduct the meeting in a fashion that will facilitate the orderly conduct of business. Those not able to attend the meeting or have insufficient time to address the committee are invited to send a written statement to Timothy A. Frazier, U.S. Department of Energy 1000 Independence Avenue, SW., Washington, DC 20585, or e-mail *CommissionDFO@nuclear.energy.gov.*

*Minutes:* The minutes of the meeting will be available by contacting Mr. Frazier. He may be reached at the postal address or email address above.

Issued in Washington, DC on March 3, 2010.

**Rachel Samuel,**

*Deputy Committee Management Officer.*

[FR Doc. 2010–4987 Filed 3–8–10; 8:45 am]

BILLING CODE 6450–01–P

## ENVIRONMENTAL PROTECTION AGENCY

**[EPA–HQ–OW–2009–0819; FRL–9124–7]**

### Agency Information Collection Activities; Submission to OMB for Review and Approval; Comment Request; Questionnaire for Steam Electric Power Generating Effluent Guidelines (New); EPA ICR No. 2368.01, OMB Control No. 2040–NEW

**AGENCY:** Environmental Protection Agency (EPA).

**ACTION:** Notice.

**SUMMARY:** In compliance with the Paperwork Reduction Act (PRA) (44 U.S.C. 3501 *et seq.*), this document announces that an Information Collection Request (ICR) has been forwarded to the Office of Management and Budget (OMB) for review and approval. This is a request for a new collection. The ICR, which is abstracted below, describes the nature of the information collection and its estimated burden and cost.

**DATES:** Additional comments may be submitted on or before April 8, 2010.

**ADDRESSES:** Submit your comments, referencing Docket ID No. EPA–HQ–OW–2009–0819, to (1) EPA online using *http://www.regulations.gov* (our preferred method), by e-mail to *ow-docket@epa.gov,* or by mail to: EPA Docket Center, Environmental Protection Agency, Water Docket, Mailcode 28221T, 1200 Pennsylvania Ave., NW., Washington, DC 20460, and (2) OMB by mail to: Office of Information and Regulatory Affairs, Office of Management and Budget (OMB), Attention: Desk Officer for EPA, 725 17th Street, NW., Washington, DC 20503.

**FOR FURTHER INFORMATION CONTACT:** Ms. Jezebele Alicea-Virella, Engineering and Analysis Division (4303T), Environmental Protection Agency, 1200 Pennsylvania Ave., NW, Washington, DC 20460; telephone number: 202–566–1755; e-mail address: *Alicea.Jezebele@epa.gov.*

**SUPPLEMENTARY INFORMATION:** EPA has submitted the following ICR to OMB for review and approval according to the procedures prescribed in 5 CFR 1320.12. On October 29, 2009 (74 FR 55837–55839), EPA sought comments on this ICR pursuant to 5 CFR 1320.8(d). EPA received comments from electric power companies, industry trade associations, and an environmental group. The topics raised in these comments address both general matters related to the ICR, such as format and timing, and suggested revisions to specific questions that request technical information in various sections of the questionnaire. The comments are summarized in the supporting statement for this ICR. Any additional comments on this proposed ICR should be submitted to EPA and OMB within 30 days of this notice.

EPA has established a public docket for this ICR under Docket ID No. EPA–HQ–OW–2009–0819, which is available for online viewing at *http://www.regulations.gov,* or in person viewing at the Water Docket in the EPA Docket Center (EPA/DC), EPA West, Room 3334, 1301 Constitution Ave., NW., Washington, DC. The EPA/DC Public Reading Room is open from 8:30 a.m. to 4:30 p.m., Monday through Friday, excluding legal holidays. The telephone number for the Reading Room is 202–566–1744, and the telephone number for the Water Docket is (202) 566–2426.

Use EPA's electronic docket and comment system at *http://www.regulations.gov,* to submit or view public comments, access the index listing of the contents of the docket, and to access those documents in the docket that are available electronically. Once in the system, select "docket search," then key in the docket ID number identified above. Please note that EPA's policy is that public comments, whether submitted electronically or in paper, will be made available for public viewing at *http://www.regulations.gov* as EPA receives them and without change, unless the comment contains copyrighted material, confidential business information (CBI), or other information whose public disclosure is restricted by statute. For further information about the electronic docket, go to *http://www.regulations.gov.*

*Title:* Questionnaire for Steam Electric Power Generating Effluent Guidelines (New).

*ICR numbers:* EPA ICR No. 2368.01, OMB Control No. 2040–NEW.

*ICR Status:* This ICR is for a new information collection activity. An Agency may not conduct or sponsor, and a person is not required to respond to, a collection of information, unless it displays a currently valid OMB control number. The OMB control numbers for EPA's regulations in title 40 of the CFR, after appearing in the **Federal Register** when approved, are listed in 40 CFR part 9, are displayed either by publication in the **Federal Register** or by other appropriate means, such as on the related collection instrument or form, if applicable. The display of OMB control numbers in certain EPA regulations is consolidated in 40 CFR part 9.

*Abstract:* The Clean Water Act (CWA) directs EPA to develop regulations, called effluent guidelines, to limit the amount of pollutants that are discharged to surface waters or to sewage treatment plants. The effluent guidelines for the steam electric power generating point source category apply to steam electric generating units at establishments that are primarily engaged in the generation of electricity for distribution and sale, resulting primarily from a process using nuclear or fossil-type fuels, such as coal, oil and natural gas.

EPA first identified the industry during its 2005 annual review of discharges from categories with existing effluent guidelines regulations, when publicly available data indicated that this industry ranked high in discharges of toxic and nonconventional pollutants. Because of these findings, EPA initiated a more detailed study of the industry and collected data through site visits, wastewater sampling, a limited data request, and secondary sources of data. EPA determined that steam electric power plants are responsible for a significant amount of the toxic pollutant loadings discharged to surface waters by point sources. Further information regarding these conclusions can be found in EPA's study, *Steam Electric Power Generating Point Source Category: Final Detailed Study Report* (EPA 821–R–09–008). This ICR will support the review and revision of the Steam Electric ELGs.

EPA is requesting the Office of Management and Budget (OMB) to review and approve the ICR for Steam Electric Power Generating Effluent Guidelines. The ICR will aid in the collection of information from a wide range of steam electric power generating industry operations to characterize waste streams, understand the processes that generate the wastes, gather environmental data, and assess the availability and affordability of treatment technologies. These data will be used to perform detailed technical and economic analyses that will support EPA's rulemaking.

EPA has identified approximately 1,200 fossil- and nuclear-fueled steam electric power plants that are potentially within scope of the data collection objectives of the questionnaire. To reduce burden on the industry, EPA intends to distribute the questionnaire to a statistically-sampled subset of these facilities. After addressing comments provided during the first FRN publication comment period, which ended on December 28, 2009, EPA estimates that approximately 734 fossil- or nuclear-fueled steam electric plants will be required to complete Parts A and I of the questionnaire. This is a decrease in the number of respondents, from 760 to 734. The questionnaire consists of multiple sections which have been tailored to address specific processes, specific data needs, or types of power plants. Parts A and I of the questionnaire will be sent to all questionnaire recipients (734 plants); the remaining sections will be sent to discrete subpopulations of questionnaire recipients. Overall, EPA estimates a reduction of 11,640 hours in respondent burden as a result of the revisions of the questionnaire.

The questionnaire will collect general plant information and selected technical information about the plant processes and the electric generating units. The information that will be collected includes economic data and technical information about flue gas desulfurization (FGD) wastewater, ash handling, process equipment cleaning operations, wastewater treatment, surface impoundment and landfill operations, and nuclear operations. The questionnaire will also require certain power plants to collect and analyze

samples of leachate from surface impoundments and landfills containing coal combustion residues. More details about information requested in each section of the questionnaire are provided in the ICR supporting statement.

*Burden Statement:* The annual public reporting and recordkeeping burden for this collection of information is estimated to average 197 hours per response. Burden means the total time, effort, or financial resources expended by persons to generate, maintain, retain, or disclose or provide information to or for a Federal agency. This includes the time needed to review instructions; develop, acquire, install, and utilize technology and systems for the purposes of collecting, validating, and verifying information, processing and maintaining information, and disclosing and providing information; adjust the existing ways to comply with any previously applicable instructions and requirements which have subsequently changed; train personnel to be able to respond to a collection of information; search data sources; complete and review the collection of information; and transmit or otherwise disclose the information.

The ICR provides a detailed explanation of the Agency's estimate, which is only briefly summarized here:

*Respondents/Affected Entities:* Steam electric power plants.

*Estimated Number of Respondents:* 734.

*Frequency of Response:* Once.

*Estimated Total Annual Hour Burden:* 48,150 hours.

*Estimated Total Annual Cost:* $3,076,316. This includes an estimated annual burden cost of $2,670,633 for labor and $405,683 million for operations and maintenance.

*Changes in the Estimates:* This is a new collection and thus represents a one-time increase to the Agency's overall burden.

Dated: March 4, 2010.

**John Moses,**

*Director, Collection Strategies Division.*

[FR Doc. 2010–4962 Filed 3–8–10; 8:45 am]

BILLING CODE 6560–50–P

## ENVIRONMENTAL PROTECTION AGENCY

**[FRL–9124–3]**

## FY2010 Supplemental Funding for Brownfields Revolving Loan Fund (RLF) Grantees

**AGENCY:** Environmental Protection Agency (EPA).

**ACTION:** Notice of the Availability of Funds.

**SUMMARY:** EPA's Office of Brownfields and Land Revitalization (OBLR) plans to make available approximately $8 million to supplementally fund Revolving Loan Fund capitalization grants previously awarded competitively under section 104(k)(3) of the Comprehensive Environmental Response, Compensation and Liability Act (CERCLA), 42 U.S.C. 9604(k)(3). Brownfields Cleanup Revolving Loan Fund (BCRLF) pilots awarded under section 104(d)(1) of CERCLA that have not transitioned to section 104(k)(3) grants are not eligible to apply for these funds. EPA will consider awarding supplemental funding only to RLF grantees who have demonstrated an ability to deliver programmatic results by making at least one loan or subgrant. The award of these funds is based on the criteria described at CERCLA 104(k)(4)(A)(ii).

The Agency is now accepting requests for supplemental funding from RLF grantees. Requests for funding must be submitted to the appropriate EPA Regional Brownfields Coordinator (listed below) by [insert date 30 days from date of publication]. Funding requests for hazardous substances and/or petroleum funding will be accepted. Specific information on submitting a request for RLF supplemental funding is described below and additional information may be obtained by contacting the EPA Regional Brownfields Coordinator.

**DATES:** This action is effective March 9, 2010.

**ADDRESSES:** A request for supplemental funding must be in the form of a letter addressed to the appropriate Regional Brownfields Coordinator with a copy to Diane Kelley, USEPA Region I, 5 Post Office Square, Suite 100, Boston, MA 02109–3912. See listing below.

**FOR FURTHER INFORMATION CONTACT:** Diane Kelley, U.S. EPA, Region I, (617) 918–1424 or the appropriate Brownfields Regional Coordinator.

**SUPPLEMENTARY INFORMATION:**

### Background

The Small Business Liability Relief and Brownfields Revitalization Act added section 104(k) to CERCLA to authorize federal financial assistance for brownfields revitalization, including grants for assessment, cleanup and job training. Section 104(k) includes a provision for the EPA to, among other things, award grants to eligible entities to capitalize Revolving Loan Funds and to provide loans and subgrants for brownfields cleanup. Section 104(k)(4)(A)(ii)o authorizes EPA to make additional grant funds available to RLF grantees for any year after the year for which the initial grant is made (noncompetitive RLF supplemental funding) taking into consideration:

(I) The number of sites and number of communities that are addressed by the revolving loan fund;

(II) The demand for funding by eligible entities that have not previously received a grant under this subsection;

(III) The demonstrated ability of the eligible entity to use the revolving loan fund to enhance remediation and provide funds on a continuing basis; and

(IV) such other similar factors as the [Agency] considers appropriate to carry out this subsection.

### Eligibility

In order to be considered for supplemental funding, RLF recipients must have made at least one loan or subgrant prior to applying for this supplemental funding. Additionally, the RLF recipient must have significantly depleted existing available funds; demonstrated a need for supplemental funding based on, among other factors, the number of sites that will be addressed; demonstrated the ability to administer and revolve the capitalization funding in the RLF grant; demonstrated an ability to use the RLF grant to address funding gaps for cleanup; and demonstrated that they have provided a community benefit from past and potential loan(s) and/or subgrant(s). Additional consideration will be given to RLF recipients who will use the funds to address areas severely impacted by economic disruptions. Applicants for supplemental funding must contact the appropriate Regional Brownfields Coordinator below to obtain information on the format for supplemental funding applications for their region. When requesting supplemental funding, applicants must specify whether they are seeking funding for sites contaminated by hazardous substances or petroleum. Applicants may request both types of funding.

REGIONAL CONTACTS

| Region | States | Address/phone number/e-mail |
|---|---|---|
| EPA Region 1, Diane Kelley, *Kelley.Diane@epa.gov* | CT, ME, MA, NH, RI, VT | One Congress Street, Suite 1100, Boston, MA 02114–2023, Phone (617) 918–1424 Fax (617) 918–1291. |
| EPA Region 2, Lya Theodoratos, *Theodoratos.Lya@epa.gov* | NJ, NY, PR, VI | 290 Broadway, 18th Floor, New York, NY 10007, Phone (212) 637–3260 Fax (212) 637–4360. |
| EPA Region 3, Tom Stolle, *Stolle.Tom@epa.gov* | DE, DC, MD, PA, VA, WV | 1650 Arch Street, Mail Code 3HS51, Philadelphia, Pennsylvania 19103, Phone (215) 814–3129 Fax (215) 814–5518. |
| EPA Region 4, Phil Vorsatz, *Vorsatz.Philip@epa.gov* | AL, FL, GA, KY, MS, NC, SC, TN. | Atlanta Federal Center, 61 Forsyth Street, SW., 10th FL , Atlanta, GA 30303–8960, Phone (404) 562–8789 Fax (404) 562–8439. |
| EPA Region 5, Deborah Orr, *Orr.Deborah@epa.gov* | IL, IN, MI, MN, OH, WI | 77 West Jackson Boulevard, Mail Code SE–4J, Chicago, Illinois 60604–3507, Phone (312) 886–7576 Fax (312) 886–7190. |
| EPA Region 6, Monica Chapa Smith, *Smith.Monica@epa.gov* | AR, LA, NM, OK, TX | 1445 Ross Avenue, Suite 1200 (6SF–PB), Dallas, Texas 75202–2733, Phone (214) 665–6780 Fax (214) 665–6660. |
| EPA Region 7, Susan Klein, *Klein.Susan@epa.gov* | IA, KS, MO, NE | 901 N. 5th Street, Kansas City, Kansas 66101, Phone (913) 551–7786 Fax (913) 551–8688. |
| EPA Region 8, Dan Heffernan, *Heffernan.Daniel@epa.gov* | CO, MT, ND, SC, UT, WY | 1595 Wynkoop Street (EPR–B), Denver, CO 80202–1129, Phone (303) 312–7074 Fax (303) 312–6065. |
| EPA Region 9, Noemi Emeric-Ford, *Emeric-ford.noemi@epa.gov* | AZ, CA, HI, NV, AS, GU | 600 Wilshire Blvd, Suite 1460, Los Angeles, CA 90017, Phone (213) 244–1821 Fax (213) 244–1850. |
| EPA Region 10, Susan Morales, *Morales.Susan@epa.gov* | AK, ID, OR, WA | 1200 Sixth Avenue, Suite 900, Mailstop: ECL–112 Seattle, WA 98101, Phone (206) 553–7299 Fax (206) 553–0124. |

Dated: March 2, 2010.

**David R. Lloyd,**

*Director, Office of Brownfields and Land Revitalization, Office of Solid Waste and Emergency Response.*

[FR Doc. 2010–4965 Filed 3–8–10; 8:45 am]

**BILLING CODE 6560–50–P**

## ENVIRONMENTAL PROTECTION AGENCY

**[FRL–9124–6]**

## Clean Air Act Advisory Committee (CAAAC) Request for Nominations to the CAAAC

**ACTION:** Notice.

**SUMMARY:** The Environmental Protection Agency (EPA) established the Clean Air Act Advisory Committee (CAAAC) on November 19, 1990, to provide independent advice and counsel to EPA on policy issues associated with implementation of the Clean Air Act of 1990. The Committee advises on economic, environmental, technical scientific, and enforcement policy issues.

*Request for Nominations:* The U.S. Environmental Protection Agency (EPA) invites nominations of qualified candidates to be considered for appointments to the Clean Air Act Advisory Committee and its subcommittees. Suggested deadline for receiving nominations is April 9, 2010. Appointments will be made by the Administrator of the Environmental Protection Agency. Appointments for the full CAAAC committee are expected to be announced in the summer of 2010. Nominee's qualifications will be assessed under the mandates of the Federal Advisory Committee Act, which requires Committees to maintain diversity across a broad range of constituencies, sectors, and groups.

Nominations for membership must include a resume describing the professional and educational qualifications of the nominee as well as community-based experience. Contact details should include full name and title, business mailing address, telephone, fax, and e-mail address. A supporting letter of endorsement is encouraged but not required.

**ADDRESSES:** Submit nomination materials to: Pat Childers, Designated Federal Officer, Clean Air Act Advisory Committee, US EPA (6102A) 1200 Pennsylvania Ave., Washington, DC 20004, T: 202 564–1082, F: 202 564–1352, e-mail *childers.pat@epa.gov.*

**FOR FURTHER INFORMATION** concerning the CAAAC, please contact Pat Childers, Office of Air and Radiation, US EPA (202) 564–1082, FAX (202) 564–1352 or by mail at US EPA, Office of Air and Radiation (Mail code 6102 A), 1200 Pennsylvania Avenue, NW., Washington, DC 20004. Additional Information on CAAAC and its Subcommittees can be found on the CAAAC Web Site: *http://www.epa.gov/oar/caaac/.*

Dated: March 5, 2010.

**Pat Childers,**

*Designated Federal Official, Office of Air and Radiation.*

[FR Doc. 2010–4964 Filed 3–8–10; 8:45 am]

**BILLING CODE 6560–50–P**

## FEDERAL MINE SAFETY AND HEALTH REVIEW COMMISSION

### Sunshine Act Notice

**TIME AND DATE:** 2 p.m., Wednesday, March 24, 2010.

**PLACE:** The United States Department of Labor Auditorium, Frances Perkins Building, 200 Constitution Avenue, NW., Washington, DC.

**STATUS:** Open.

**MATTERS TO BE CONSIDERED:** The Commission will hear oral argument in the matter *Secretary of Labor* v. *Eastern Associated Coal Corporation,* Docket No. WEVA 2007–335. (Issues include whether certain violations of roof control requirements constituted an "unwarrantable failure to comply.")

Any person attending this oral argument who requires special accessibility features and/or auxiliary aids, such as sign language interpreters, must inform the Commission in advance of those needs. Subject to 29 CFR 2706.150(a)(3) and 2706.160(d).

**CONTACT PERSON FOR MORE INFORMATION:** Jean Ellen (202) 434–9950/(202) 708–9300 for TDD Relay/1–800–877–8339 for toll free.

**Jean H. Ellen,**

*Chief Docket Clerk.*

[FR Doc. 2010–5090 Filed 3–5–10; 4:15 pm]

BILLING CODE 6735–01–P

## FEDERAL RESERVE SYSTEM

### Change in Bank Control Notices; Acquisition of Shares of Bank or Bank Holding Companies

The notificants listed below have applied under the Change in Bank Control Act (12 U.S.C. 1817(j)) and § 225.41 of the Board's Regulation Y (12 CFR 225.41) to acquire a bank or bank holding company. The factors that are considered in acting on the notices are set forth in paragraph 7 of the Act (12 U.S.C. 1817(j)(7)).

The notices are available for immediate inspection at the Federal Reserve Bank indicated. The notices also will be available for inspection at the office of the Board of Governors. Interested persons may express their views in writing to the Reserve Bank indicated for that notice or to the offices of the Board of Governors. Comments must be received not later than March 22, 2010.

**A. Federal Reserve Bank of St. Louis** (Glenda Wilson, Community Affairs Officer) 411 Locust Street, St. Louis, Missouri 63166-2034:

*1. R. Tracy Fox, Little Rock, Arkansas, as trustee of the Smith Associated Banking Corporation Voting Trust Agreement, which will gain control of Smith Associated Banking Corporation, Hot Springs, Arkansas;* and indirectly control Bank of Salem, Salem, Arkansas, and Security Bank, Stephens, Arkansas.

Board of Governors of the Federal Reserve System, March 4, 2010.

**Robert deV. Frierson,**

*Deputy Secretary of the Board.*

[FR Doc. 2010–4970 Filed 3–8–10; 8:45 am]

BILLING CODE 6210–01–S

## FEDERAL RESERVE SYSTEM

### Sunshine Act Meeting

**AGENCY HOLDING THE MEETING:** Board of Governors of the Federal Reserve System.

**TIME AND DATE:** 12 p.m., Monday, March 15, 2010.

**PLACE:** Marriner S. Eccles Federal Reserve Board Building, 20th and C Streets, N.W., Washington, D.C. 20551.

**STATUS:** Closed.

**MATTERS TO BE CONSIDERED:**

1. Personnel actions (appointments, promotions, assignments, reassignments, and salary actions) involving individual Federal Reserve System employees.

2. Any items carried forward from a previously announced meeting.

**FOR FURTHER INFORMATION CONTACT:** Michelle Smith, Director, or Dave Skidmore, Assistant to the Board, Office of Board Members at 202–452–2955.

**SUPPLEMENTARY INFORMATION:** You may call 202–452–3206 beginning at approximately 5 p.m. two business days before the meeting for a recorded announcement of bank and bank holding company applications scheduled for the meeting; or you may contact the Board's Web site at *http://www.federalreserve.gov* for an electronic announcement that not only lists applications, but also indicates procedural and other information about the meeting.

Board of Governors of the Federal Reserve System, March 5, 2010.

**Robert deV. Frierson,**

*Deputy Secretary of the Board.*

[FR Doc. 2010–5106 Filed 3–5–10; 4:15 pm]

BILLING CODE 6210–01–S

## FEDERAL RETIREMENT THRIFT INVESTMENT BOARD

### Sunshine Act; Notice of Meeting

**TIME AND DATE:** 9 a.m. (Eastern Time) March 15, 2010.

**PLACE:** 4th Floor Conference Room, 1250 H Street, NW., Washington, DC 20005.

**STATUS:** Parts will be open to the public and parts closed to the public.

**MATTERS TO BE CONSIDERED**

**Parts Open to the Public**

1. Approval of the minutes of the February 16, 2010, Board member meeting.
2. Thrift Savings Plan activity report by the Executive Director.
   a. Monthly Participant Activity Report.
   b. Monthly Investment Performance Report.
   c. Legislative Report.

**Parts Closed to the Public**

3. Proprietary Data.
4. Proprietary Data.

**CONTACT PERSON FOR MORE INFORMATION:** Thomas J. Trabucco, Director, Office of External Affairs, (202) 942–1640.

Dated: March 4, 2010.

**Thomas K. Emswiler,**

*Secretary, Federal Retirement Thrift Investment Board.*

[FR Doc. 2010–5049 Filed 3–5–10; 11:15 am]

BILLING CODE 6760–01–P

## FEDERAL TRADE COMMISSION

**[File No. 091 0133]**

### PepsiCo, Inc.; Analysis of Agreement Containing Consent Order To Aid Public Comment

**AGENCY:** Federal Trade Commission.

**ACTION:** Proposed Consent Agreement.

**SUMMARY:** The consent agreement in this matter settles alleged violations of federal law prohibiting unfair or deceptive acts or practices or unfair methods of competition. The attached Analysis to Aid Public Comment describes both the allegations in the draft complaint and the terms of the consent order—embodied in the consent agreement—that would settle these allegations.

**DATES:** Comments must be received on or before March 26, 2010.

**ADDRESSES:** Interested parties are invited to submit written comments electronically or in paper form. Comments should refer to "PepsiCo, File

No. 091 0133" to facilitate the organization of comments. Please note that your comment—including your name and your state—will be placed on the public record of this proceeding, including on the publicly accessible FTC website, at (*http://www.ftc.gov/os/publiccomments.shtm*).

Because comments will be made public, they should not include any sensitive personal information, such as an individual's Social Security Number; date of birth; driver's license number or other state identification number, or foreign country equivalent; passport number; financial account number; or credit or debit card number. Comments also should not include any sensitive health information, such as medical records or other individually identifiable health information. In addition, comments should not include any "[t]rade secret or any commercial or financial information which is obtained from any person and which is privileged or confidential. . . .," as provided in Section 6(f) of the FTC Act, 15 U.S.C. 46(f), and Commission Rule 4.10(a)(2), 16 CFR 4.10(a)(2). Comments containing material for which confidential treatment is requested must be filed in paper form, must be clearly labeled "Confidential," and must comply with FTC Rule 4.9(c), 16 CFR 4.9(c).[1]

Because paper mail addressed to the FTC is subject to delay due to heightened security screening, please consider submitting your comments in electronic form. Comments filed in electronic form should be submitted by using the following weblink: (*https://public.commentworks.com/ftc/pepsico*) and following the instructions on the web-based form. To ensure that the Commission considers an electronic comment, you must file it on the web-based form at the weblink: (*https://public.commentworks.com/ftc/pepsico*). If this Notice appears at (*http://www.regulations.gov/search/index.jsp*), you may also file an electronic comment through that website. The Commission will consider all comments that regulations.gov forwards to it. You may also visit the FTC website at (*http://www.ftc.gov/*) to read the Notice and the news release describing it.

A comment filed in paper form should include the "PepsiCo, File No. 091 0133" reference both in the text and on the envelope, and should be mailed or delivered to the following address: Federal Trade Commission, Office of the Secretary, Room H-135 (Annex D), 600 Pennsylvania Avenue, NW, Washington, DC 20580. The FTC is requesting that any comment filed in paper form be sent by courier or overnight service, if possible, because U.S. postal mail in the Washington area and at the Commission is subject to delay due to heightened security precautions.

The Federal Trade Commission Act ("FTC Act") and other laws the Commission administers permit the collection of public comments to consider and use in this proceeding as appropriate. The Commission will consider all timely and responsive public comments that it receives, whether filed in paper or electronic form. Comments received will be available to the public on the FTC website, to the extent practicable, at (*http://www.ftc.gov/os/publiccomments.shtm*). As a matter of discretion, the Commission makes every effort to remove home contact information for individuals from the public comments it receives before placing those comments on the FTC website. More information, including routine uses permitted by the Privacy Act, may be found in the FTC's privacy policy, at (*http://www.ftc.gov/ftc/privacy.shtm*).

**FOR FURTHER INFORMATION CONTACT:** Joan Heim (202-326-2014) or Joseph S. Brownman (202-326-2605), Bureau of Competition, 600 Pennsylvania Avenue, NW, Washington, D.C. 20580.

**SUPPLEMENTARY INFORMATION:** Pursuant to section 6(f) of the Federal Trade Commission Act, 38 Stat. 721, 15 U.S.C. 46(f), and § 2.34 the Commission Rules of Practice, 16 CFR 2.34, notice is hereby given that the above-captioned consent agreement containing a consent order to cease and desist, having been filed with and accepted, subject to final approval, by the Commission, has been placed on the public record for a period of thirty (30) days. The following Analysis to Aid Public Comment describes the terms of the consent agreement, and the allegations in the complaint. An electronic copy of the full text of the consent agreement package can be obtained from the FTC Home Page (for February 26, 2010), on the World Wide Web, at (*http://www.ftc.gov/os/actions.shtm*). A paper copy can be obtained from the FTC Public Reference Room, Room 130-H, 600 Pennsylvania Avenue, NW, Washington, D.C. 20580, either in person or by calling (202) 326-2222.

Public comments are invited, and may be filed with the Commission in either paper or electronic form. All comments should be filed as prescribed in the **ADDRESSES** section above, and must be received on or before the date specified in the **DATES** section.

## Analysis of Agreement Containing Consent Order to Aid Public Comment

### *I. Introduction*

The Federal Trade Commission ("Commission") has accepted, subject to final approval, an Agreement Containing Consent Order from Respondent PepsiCo, Inc. ("PepsiCo"), to address concerns in connection with PepsiCo's acquisitions of two of its bottlers and the subsequent exclusive license from Dr Pepper Snapple Group, Inc. ("DPSG"), to bottle, distribute and sell the Dr Pepper, Crush, and Schweppes carbonated soft drink brands of DPSG in certain territories. The Consent Agreement requires, among other things, that PepsiCo limit the persons within the company who have access to commercially sensitive confidential information that DPSG will provide to PepsiCo to enable PepsiCo to carry out the distribution functions contemplated by the license.

The DPSG - PepsiCo license agreement followed PepsiCo's announced proposed acquisitions of its two largest bottler-distributors, Pepsi Bottling Group, Inc. ("PBG"), and PepsiAmericas, Inc. ("PAS"). These two bottler-distributors had been licensed by PepsiCo and by DPSG to bottle and distribute many of their carbonated soft drink brands. Following the acquisitions, PepsiCo will take on the bottling and distribution functions previously performed by PBG and PAS.

The Complaint alleges that, as a result of PepsiCo's acquisition of PBG and PAS, PepsiCo will have access to DPSG's commercially sensitive confidential marketing and brand plans. Without adequate safeguards, PepsiCo could misuse that information, leading to anticompetitive conduct that would make DPSG a less effective competitor or would facilitate coordination in the industry. To remedy this problem, the proposed Consent Agreement allows only PepsiCo employees who perform traditional carbonated soft drink "bottler functions" access to the DPSG commercially sensitive information. It prohibits PepsiCo employees involved in traditional "concentrate-related functions" from seeing that information.

### *II. Respondent PepsiCo, Inc.*

PepsiCo is a corporation organized, existing, and doing business under and

[1] The comment must be accompanied by an explicit request for confidential treatment, including the factual and legal basis for the request, and must identify the specific portions of the comment to be withheld from the public record. The request will be granted or denied by the Commission's General Counsel, consistent with applicable law and the public interest. *See* FTC Rule 4.9(c), 16 CFR 4.9(c).

by virtue of the laws of the State of North Carolina, with its office and principal place of business located at 700 Anderson Hill Road, Purchase, New York 10577. PepsiCo in 2009 had total worldwide revenues from the sale of all products of about $43 billion. PepsiCo's United States sales in 2009 of carbonated soft drink concentrate totaled about $3 billion. United States sales of all of PepsiCo's carbonated soft drink brands are over $20 billion.

PepsiCo is a food and beverage company that includes PepsiCo Americas Beverages (a beverage arm), Frito-Lay (a snack food arm), and Quaker Foods (a cereal arm). Among other products, PepsiCo produces the concentrate for the PepsiCo carbonated soft drink beverage brands that are distributed by its bottlers. Some of those brands are Pepsi-Cola, Diet Pepsi, Mountain Dew, Diet Mountain Dew, Sierra Mist, Slice, and Mug Root Beer.

*III. Licensor Dr Pepper Snapple Group, Inc.*

DPSG is a corporation organized, existing and doing business under and by virtue of the laws of the State of Delaware, with its office and principal place of business located at 5301 Legacy Drive, Plano, Texas 75024. Among other things, DPSG produces the concentrate for the DPSG carbonated soft drink brands that are distributed by its bottlers. Some of those brands are Dr Pepper, Diet Dr Pepper, Crush, Schweppes, Canada Dry, Vernor's, A&W Root Beer, 7-UP, Hires Root Beer, IBC, RC Cola, Diet Rite, Welch's Grape Soda, Sunkist, and Squirt. DPSG in 2009 had total revenues of about $6 billion. DPSG's United States sales in 2009 of carbonated soft drink concentrate totaled about $1.5 billion.

*IV. The Bottlers*

A. Pepsi Bottling Group, Inc.

PBG is a corporation organized, existing and doing business under and by virtue of the laws of the State of Delaware, with its office and principal place of business located at One Pepsi Way, Somers, New York 10589. PBG is the nation's largest bottler and distributor of PepsiCo beverages and accounts for about 56% of PepsiCo's total U.S. bottler-distributed volume of carbonated soft drink beverages. PBG's United States sales in 2009 of carbonated soft drinks totaled about $6 billion. PBG is the bottler-distributor for many PepsiCo and DPSG carbonated soft drink brands. The geographic areas or territories in which PBG is licensed to distribute PepsiCo brand carbonated soft drinks include all or a portion of 41 states and the District of Columbia.

B. PepsiAmericas, Inc

PAS is a corporation organized, existing and doing business under and by virtue of the laws of the State of Delaware, with its office and principal place of business located at 4000 RBC Plaza, 60 South Sixth Street, Minneapolis, Minnesota 55402. PAS is the nation's second largest bottler and distributor of PepsiCo beverages. PAS's United States sales in 2009 of carbonated soft drinks totaled about $2.5 billion. PAS accounts for about 19% of PepsiCo's total U.S. bottler-distributed volume of carbonated soft drinks. PAS is the bottler-distributor for many PepsiCo and DPSG carbonated soft drink brands. The principal geographic areas or territories in which PAS is licensed to distribute PepsiCo brand carbonated soft drinks include all or a portion of 19 states, primarily in the Midwest.

*V. The Two Transactions*

A. The Bottler Acquisitions

On August 3, 2009, PepsiCo entered into agreements with PBG and PAS, the two largest independent bottlers and distributors of its carbonated soft drink brands, to acquire all of their remaining outstanding voting securities. The total value of the acquired shares for both bottlers would be approximately $7.8 billion. At the time of the agreements, PepsiCo owned about 40% of PBG and about 43% of PAS. Together, PBG and PAS have been responsible for about 75% of all United States bottler-distributed sales of PepsiCo carbonated soft drink brands and about 20% of all United States bottler-distributed sales of DPSG carbonated soft drink brands.

B. The DPSG-PepsiCo License Agreement

Following the agreements to acquire PBG and PAS, PepsiCo sought a license to continue to bottle and distribute the DPSG brands that the bottling companies had distributed. (The DPSG licenses held by PBG and PAS were terminated by DPSG as a result of the proposed acquisitions.) In the DPSG-PepsiCo license agreement, dated December 7, 2009, PepsiCo agreed to bottle and distribute DPSG's Dr Pepper, Crush, and Schweppes carbonated soft drink brands in the former PBG and PAS territories, where those bottlers had been producing and distributing those products. PepsiCo agreed to pay DPSG $900 million for a non-exclusive license to produce[2] and an exclusive, twenty-year[3] license to distribute and sell those brands.

Under the license agreement, PepsiCo has agreed, among other things, to (a) distribute the Dr Pepper brand in all classes of trade based on the Pepsi brands; (b) grow the Dr Pepper brand based on the sales of other carbonated soft drink brands; (c) promote the DPSG beverages and provide sales support for such promotions, based on PepsiCo's promotions of its other soft drink beverages, and (d) in connection with price-off promotions and media advertising, promote and advertise the Dr Pepper brand based on rates of promotion and advertising of the PepsiCo brands.

*VI. The Proposed Complaint*

The Commission's Complaint alleges that PepsiCo and DPSG are direct competitors in the highly concentrated and difficult to enter markets for (a) branded concentrate and (b) branded and direct-store-door delivered carbonated soft drinks. The concentrate markets are both national and local, and the branded carbonated soft drink markets are local. Total United States sales of concentrate are about $9 billion, and total United States sales of carbonated soft drinks, measured at retail, are about $70 billion.

By acquiring PBG and PAS, PepsiCo will be bottling and distributing both its own products and those of its competitor DPSG. Concentrate manufacturers like DPSG share commercially sensitive information with bottlers so that bottlers can effectively carry out their responsibilities; DPSG currently provides this sort of information to PBG and PAS. As DPSG's bottler, PepsiCo will need this type of information.

At the same time, Pepsico remains a competitor of DPSG. PepsiCo could use the information in ways that undermine competition. The Complaint alleges that PepsiCo's access to DPSG's confidential information could eliminate competition between PepsiCo and DPSG, increase the likelihood that PepsiCo may unilaterally exercise market power, and facilitate coordinated interaction in the industry. In turn, that conduct could lead to higher prices for consumers.

[2] The production right is not exclusive to allow DPSG to produce carbonated soft drinks in the former PBG and PAS territories for sale by DPSG outside those territories.

[3] The license agreement is for an initial term of twenty (20) years, with automatic renewal for additional twenty (20) year periods, unless terminated pursuant its terms.

*VII. The Proposed Consent Order*

To remedy the alleged competitive concern associated with access to the DPSG commercially sensitive confidential information, the consent decree prevents that information from reaching PepsiCo employees who could use it to either harm DPSG or to facilitate collusion. PepsiCo must set up a firewall to prevent persons responsible for "concentrate-related functions" – the kinds of functions in which PepsiCo engaged as a competitor of DPSG when both had their brands distributed by PBG and PAS – from access to the DPSG information. Persons at PepsiCo who are assigned to perform traditional "bottler functions" – the kinds of functions that PBG and PAS historically have performed for DPSG – will be permitted access to that information.

The proposed Consent Agreement also provides for the appointment of a monitor to assure PepsiCo's compliance with the Consent Agreement. The monitor will have a fiduciary responsibility to the Commission. The monitor will be appointed for a five (5) year term, but the Commission may extend or modify the term as appropriate.

The order, like the DPSG-Pepsi license agreement, will have a term of twenty (20) years.

*VIII. Opportunity for Public Comment*

The Consent Agreement has been placed on the public record for thirty (30) days for receipt of comments from interested persons. Comments received during this period will become part of the public record. After thirty days, the Commission will again review the proposed Consent Agreement, as well as the comments received, and will decide whether it should withdraw from the Consent Agreement or make final the Decision and Order.

By accepting the Consent Agreement subject to final approval, the Commission anticipates that the competitive problem alleged in the Complaint will be resolved. The purpose of this analysis is to invite and facilitate public comment concerning the Consent Agreement. It is not intended to constitute an official interpretation of the proposed Consent Agreement, nor is it intended to modify the terms of the Decision and Order in any way.

By direction of the Commission.

**Donald S. Clark,**

*Secretary.*

[FR Doc. 2010–4894 Filed 3–8–10; 11:48 am]

**BILLING CODE 6750–01–S**

## FEDERAL TRADE COMMISSION

**[File No. 072 3165]**

## Richard J. Stanton; Analysis of Proposed Consent Order to Aid Public Comment

**AGENCY:** Federal Trade Commission.

**ACTION:** Proposed Consent Agreement.

**SUMMARY:** The consent agreement in this matter settles alleged violations of federal law prohibiting unfair or deceptive acts or practices or unfair methods of competition. The attached Analysis to Aid Public Comment describes both the allegations in the draft complaint and the terms of the consent order — embodied in the consent agreement — that would settle these allegations.

**DATES:** Comments must be received on or before March 29, 2010.

**ADDRESSES:** Interested parties are invited to submit written comments electronically or in paper form. Comments should refer to "Richard J. Stanton, File No. 072 3165" to facilitate the organization of comments. Please note that your comment — including your name and your state — will be placed on the public record of this proceeding, including on the publicly accessible FTC website, at (*http://www.ftc.gov/os/publiccomments.shtm*).

Because comments will be made public, they should not include any sensitive personal information, such as an individual's Social Security Number; date of birth; driver's license number or other state identification number, or foreign country equivalent; passport number; financial account number; or credit or debit card number. Comments also should not include any sensitive health information, such as medical records or other individually identifiable health information. In addition, comments should not include any "[t]rade secret or any commercial or financial information which is obtained from any person and which is privileged or confidential. . . .," as provided in Section 6(f) of the FTC Act, 15 U.S.C. 46(f), and Commission Rule 4.10(a)(2), 16 CFR 4.10(a)(2). Comments containing material for which confidential treatment is requested must be filed in paper form, must be clearly labeled "Confidential," and must comply with FTC Rule 4.9(c), 16 CFR 4.9(c).[1]

Because paper mail addressed to the FTC is subject to delay due to heightened security screening, please consider submitting your comments in electronic form. Comments filed in electronic form should be submitted by using the following weblink: (*https://public.commentworks.com/ftc/richardjstanton*) and following the instructions on the web-based form. To ensure that the Commission considers an electronic comment, you must file it on the web-based form at the weblink: (*https://public.commentworks.com/ftc/richardjstanton*). If this Notice appears at (*http://www.regulations.gov/search/index.jsp*), you may also file an electronic comment through that website. The Commission will consider all comments that regulations.gov forwards to it. You may also visit the FTC website at (*http://www.ftc.gov/*) to read the Notice and the news release describing it.

A comment filed in paper form should include the "Richard J. Stanton, File No. 072 3165" reference both in the text and on the envelope, and should be mailed or delivered to the following address: Federal Trade Commission, Office of the Secretary, Room H-135 (Annex D), 600 Pennsylvania Avenue, NW, Washington, DC 20580. The FTC is requesting that any comment filed in paper form be sent by courier or overnight service, if possible, because U.S. postal mail in the Washington area and at the Commission is subject to delay due to heightened security precautions.

The Federal Trade Commission Act ("FTC Act") and other laws the Commission administers permit the collection of public comments to consider and use in this proceeding as appropriate. The Commission will consider all timely and responsive public comments that it receives, whether filed in paper or electronic form. Comments received will be available to the public on the FTC website, to the extent practicable, at (*http://www.ftc.gov/os/publiccomments.shtm*). As a matter of discretion, the Commission makes every effort to remove home contact information for individuals from the public comments it receives before placing those comments on the FTC website. More information, including routine uses permitted by the Privacy Act, may be found in the FTC's privacy policy, at (*http://www.ftc.gov/ftc/privacy.shtm*).

**FOR FURTHER INFORMATION CONTACT:** Laura Berger (202-326-2471), Bureau of

[1] The comment must be accompanied by an explicit request for confidential treatment, including the factual and legal basis for the request, and must identify the specific portions of the comment to be withheld from the public record. The request will be granted or denied by the Commission's General Counsel, consistent with applicable law and the public interest. *See* FTC Rule 4.9(c), 16 CFR 4.9(c).

Consumer Protection, 600 Pennsylvania Avenue, NW, Washington, D.C. 20580.

**SUPPLEMENTARY INFORMATION:** Pursuant to section 6(f) of the Federal Trade Commission Act, 38 Stat. 721, 15 U.S.C. 46(f), and § 2.34 the Commission Rules of Practice, 16 CFR 2.34, notice is hereby given that the above-captioned consent agreement containing a consent order to cease and desist, having been filed with and accepted, subject to final approval, by the Commission, has been placed on the public record for a period of thirty (30) days. The following Analysis to Aid Public Comment describes the terms of the consent agreement, and the allegations in the complaint. An electronic copy of the full text of the consent agreement package can be obtained from the FTC Home Page (for February 25, 2010), on the World Wide Web, at (*http://www.ftc.gov/os/actions.shtm*). A paper copy can be obtained from the FTC Public Reference Room, Room 130-H, 600 Pennsylvania Avenue, NW, Washington, D.C. 20580, either in person or by calling (202) 326-2222.

Public comments are invited, and may be filed with the Commission in either paper or electronic form. All comments should be filed as prescribed in the **ADDRESSES** section above, and must be received on or before the date specified in the **DATES** section.

**Analysis of Agreement Containing Consent Order to Aid Public Comment**

The Federal Trade Commission ("FTC" or "Commission") has accepted, subject to final approval, an agreement containing a consent order from Richard J. Stanton ("respondent"), the founder and former Chief Executive Officer of ControlScan, Inc. ("ControlScan"). The Commission has entered into a separate settlement with ControlScan to be filed in federal district court in the Northern District of Georgia.

The proposed consent order has been placed on the public record for thirty (30) days for receipt of comments by interested persons. Comments received during this period will become part of the public record. After thirty (30) days, the Commission again will review the agreement and the comments received and will decide whether it should withdraw from the agreement or make final the agreement's proposed order.

This matter involves respondent's marketing and distribution of a variety of online seal certification marks ("website seals" or "seals") for companies to display on their websites. The FTC complaint alleges that respondent violated Section 5(a) of the FTC Act by falsely representing to consumers that ControlScan had verified the privacy and data security practices of companies displaying its website seals, when in fact it had not. Specifically, the complaint alleges that respondent falsely represented to consumers that ControlScan had verified the privacy and security protections offered by a company displaying ControlScan's Business Background Reviewed, Registered Member, Privacy Protected, and Privacy Reviewed seals, and falsely represented how frequently ControlScan reviewed such companies' fitness to display each of these seals. In addition, the complaint alleges that respondent falsely represented to consumers how frequently ControlScan reviewed companies' fitness to display the Verified Secure seal. The FTC complaint describes, with specificity, the claims respondent made regarding ControlScan's verification of a company displaying each of the challenged seals, as well as the verification that ControlScan in fact conducted in connection with each seal.

The proposed consent order contains provisions designed to prevent respondent from engaging in similar acts and practices in the future. Part I of the proposed order prohibits respondent from misrepresenting: 1) the verification that is conducted concerning the protection that a company provides for the privacy and/or security of consumer information or the steps a company has taken to provide such protection; or 2) the frequency of such verification. Part II requires respondent to pay to the Commission $102,000 in equitable monetary relief. Parts III through VI of the proposed order are reporting and compliance provisions. Part III requires respondent to keep copies of documents relevant to compliance with the order for a five-year period. Part IV requires respondent to provide copies of the order to certain personnel of companies he controls, and Part V requires him to notify the Commission of changes in his employment or affiliation with any business that involves offering or providing seals or related products or services. Part VI mandates that respondent file an initial compliance report with the Commission and respond to other requests from FTC staff. Part VII is a provision "sunsetting" the order after twenty (20) years, with certain exceptions.

The purpose of this analysis is to facilitate public comment on the proposed order. It is not intended to constitute an official interpretation of the agreement and proposed order or to modify in any way its terms.

By direction of the Commission.

**Donald S. Clark,**

*Secretary.*

[FR Doc. 2010–4897 Filed 3–8–10; 11:16 am]

**BILLING CODE 6750–01–S**

## FEDERAL TRADE COMMISSION

**[File No. 091 0062]**

## Transitions Optical, Inc.; Analysis to Aid Public Comment

**AGENCY:** Federal Trade Commission.

**ACTION:** Proposed Consent Agreement.

**SUMMARY:** The consent agreement in this matter settles alleged violations of federal law prohibiting unfair or deceptive acts or practices or unfair methods of competition. The attached Analysis to Aid Public Comment describes both the allegations in the draft complaint and the terms of the consent order—embodied in the consent agreement—that would settle these allegations.

**DATES:** Comments must be received on or before April 5, 2010.

**ADDRESSES:** Interested parties are invited to submit written comments electronically or in paper form. Comments should refer to "Transitions Optical, File No. 091 0062" to facilitate the organization of comments. Please note that your comment—including your name and your state—will be placed on the public record of this proceeding, including on the publicly accessible FTC website, at (*http://www.ftc.gov/os/publiccomments.shtm*).

Because comments will be made public, they should not include any sensitive personal information, such as an individual's Social Security Number; date of birth; driver's license number or other state identification number, or foreign country equivalent; passport number; financial account number; or credit or debit card number. Comments also should not include any sensitive health information, such as medical records or other individually identifiable health information. In addition, comments should not include any "[t]rade secret or any commercial or financial information which is obtained from any person and which is privileged or confidential. . . .," as provided in Section 6(f) of the FTC Act, 15 U.S.C. 46(f), and Commission Rule 4.10(a)(2), 16 CFR 4.10(a)(2). Comments containing material for which confidential treatment is requested must be filed in paper form, must be clearly labeled

"Confidential," and must comply with FTC Rule 4.9(c), 16 CFR 4.9(c).[1]

Because paper mail addressed to the FTC is subject to delay due to heightened security screening, please consider submitting your comments in electronic form. Comments filed in electronic form should be submitted by using the following weblink: (*https://public.commentworks.com/ftc/transitionsoptical*) and following the instructions on the web-based form. To ensure that the Commission considers an electronic comment, you must file it on the web-based form at the weblink: (*https://public.commentworks.com/ftc/transitionsoptical*). If this Notice appears at (*http://www.regulations.gov/search/index.jsp*), you may also file an electronic comment through that website. The Commission will consider all comments that regulations.gov forwards to it. You may also visit the FTC website at (*http://www.ftc.gov/*) to read the Notice and the news release describing it.

A comment filed in paper form should include the "Transitions Optical, File No. 091 0062" reference both in the text and on the envelope, and should be mailed or delivered to the following address: Federal Trade Commission, Office of the Secretary, Room H-135 (Annex D), 600 Pennsylvania Avenue, NW, Washington, DC 20580. The FTC is requesting that any comment filed in paper form be sent by courier or overnight service, if possible, because U.S. postal mail in the Washington area and at the Commission is subject to delay due to heightened security precautions.

The Federal Trade Commission Act ("FTC Act") and other laws the Commission administers permit the collection of public comments to consider and use in this proceeding as appropriate. The Commission will consider all timely and responsive public comments that it receives, whether filed in paper or electronic form. Comments received will be available to the public on the FTC website, to the extent practicable, at (*http://www.ftc.gov/os/publiccomments.shtm*). As a matter of discretion, the Commission makes every effort to remove home contact information for individuals from the public comments it receives before placing those comments on the FTC website. More information, including routine uses permitted by the Privacy Act, may be found in the FTC's privacy policy, at (*http://www.ftc.gov/ftc/privacy.shtm*).

[1] The comment must be accompanied by an explicit request for confidential treatment, including the factual and legal basis for the request, and must identify the specific portions of the comment to be withheld from the public record. The request will be granted or denied by the Commission's General Counsel, consistent with applicable law and the public interest. *See* FTC Rule 4.9(c), 16 CFR 4.9(c).

**FOR FURTHER INFORMATION CONTACT:** Linda M. Holleran (202-326-2267), Bureau of Competition, 600 Pennsylvania Avenue, NW, Washington, D.C. 20580.

**SUPPLEMENTARY INFORMATION:** Pursuant to section 6(f) of the Federal Trade Commission Act, 38 Stat. 721, 15 U.S.C. 46(f), and § 2.34 the Commission Rules of Practice, 16 CFR 2.34, notice is hereby given that the above-captioned consent agreement containing a consent order to cease and desist, having been filed with and accepted, subject to final approval, by the Commission, has been placed on the public record for a period of thirty (30) days. The following Analysis to Aid Public Comment describes the terms of the consent agreement, and the allegations in the complaint. An electronic copy of the full text of the consent agreement package can be obtained from the FTC Home Page (for March 3, 2010), on the World Wide Web, at (*http://www.ftc.gov/os/actions.shtm*). A paper copy can be obtained from the FTC Public Reference Room, Room 130-H, 600 Pennsylvania Avenue, NW, Washington, D.C. 20580, either in person or by calling (202) 326-2222.

Public comments are invited, and may be filed with the Commission in either paper or electronic form. All comments should be filed as prescribed in the **ADDRESSES** section above, and must be received on or before the date specified in the **DATES** section.

## Analysis of Agreement Containing Consent Order to Aid Public Comment

The Federal Trade Commission has accepted for public comment an Agreement Containing Consent Order to Cease and Desist ("Agreement") with Transitions Optical, Inc. ("Transitions"). The Agreement seeks to resolve charges that Transitions used exclusionary acts and practices to maintain its monopoly power in the photochromic lens industry in violation of Section 5 of the Federal Trade Commission Act, 15 U.S.C. § 45. Photochromic lenses are corrective ophthalmic lenses that darken when exposed to the ultraviolet light present in sunlight, and fade back to clear when removed from the ultraviolet light.

The proposed Complaint that accompanies the Agreement ("Complaint") alleges that Transitions has used its monopoly power to impose an exclusive-dealing policy on its customers since 1999. As a result, Transitions has foreclosed rivals from key distribution channels and limited competition in the relevant market, leading to higher prices, lower output, reduced innovation and diminished consumer choice.

The Commission anticipates that the competitive issues described in the Complaint will be resolved by accepting the proposed Order, subject to final approval, contained in the Agreement. The Agreement has been placed on the public record for 30 days for receipt of comments from interested members of the public. Comments received during this period will become part of the public record. After 30 days, the Commission will again review the Agreement and comments received, and will decide whether it should withdraw from the Agreement or make final the Order contained in the Agreement.

The purpose of this Analysis to Aid Public Comment is to invite and facilitate public comment concerning the proposed Order. It is not intended to constitute an official interpretation of the Agreement and proposed Order or in any way to modify their terms. The Agreement is for settlement purposes only and does not constitute an admission by Transitions that the law has been violated as alleged in the Complaint or that the facts alleged in the Complaint, other than jurisdictional facts, are true.

### *I. The Complaint*

The Complaint makes the following allegations.

### A. Industry Background

This case involves the photochromic lens industry. Consumers of corrective ophthalmic lenses (lenses used for vision correction and worn in eyeglasses) have the option to purchase those lenses with a photochromic treatment, which protects eyes from harmful ultraviolet ("UV") light. A "photochromic lens," which is a corrective ophthalmic lens with a photochromic treatment, will darken when it is exposed to the UV light present in sunlight, and fade back to clear when it is removed from the UV light.

In 2008, approximately 18 to 20 percent of all corrective ophthalmic lenses purchased in the United States were photochromic, and photochromic lenses totaled approximately $630 million in sales at the wholesale level. Photochromic lenses have characteristics and uses distinct from polarized lenses (which are designed to

remove glare) and fixed-tint lenses (*e.g.*, prescription sunglasses).

Transitions produces its photochromic lenses in partnership with lens manufacturers known as "lens casters." Lens casters supply the corrective ophthalmic lenses to Transitions, and Transitions uses proprietary methods to apply patented photochromic dyes or other photochromic materials to the lenses. Transitions then sells the lenses, now photochromic, back to the lens casters. These lens casters are Transitions' only direct customers.

Lens casters, in turn, resell the photochromic lenses to wholesale optical laboratories ("wholesale labs") and optical retailers ("retailers"). Wholesale labs generally sell corrective ophthalmic lenses, including photochromic lenses, to ophthalmologists, optometrists, and opticians (collectively known as "eye care practitioners") who are not affiliated with retailers. Wholesale labs grind the lens according to the lens prescription, fit the lens into an eyeglass frame, and deliver the frame with the finished lens back to the eye care practitioner. In addition to these laboratory functions, a wholesale lab will often employ a sales force to promote specific lenses to eye care practitioners. Photochromic lens suppliers, such as Transitions, use wholesale labs and their sales forces to market their lenses because wholesale labs are the most efficient means for a photochromic lens supplier to promote and sell its products to the tens of thousands of independent eye care practitioners prescribing photochromic lenses to consumers.

Retailers, on the other hand, combine both eye care practitioner and laboratory services. They employ their own eye care practitioners who deal directly with consumers. In addition, retailers grind and fit lenses into eyeglass frames and deliver the frame with the finished lens to the consumer. The retail channel is generally a more efficient means for promoting and selling photochromic lenses to consumers than comparable efforts through the wholesale lab channel because a single sales effort to a large retailer can influence the prescribing behavior of hundreds of eye care practitioners. Retailers range from large national retail chains to smaller, regional ones.

This industry structure is reflected in the diagram below.

B. Transitions' Monopoly Power

Transitions has monopoly power in the relevant market for the development, manufacture and sale of photochromic treatments for corrective ophthalmic lenses in the United States. Transitions has garnered a persistently high share of at least 80 percent of this market over the past five years, and over 85 percent in 2008. The photochromic lens industry has high barriers to entry, which include significant product development costs and capital requirements, substantial intellectual property rights, regulatory requirements, and Transitions' anticompetitive and exclusionary conduct. Direct evidence of Transitions' ability to exclude competitors and to control prices confirms Transitions' monopoly power.

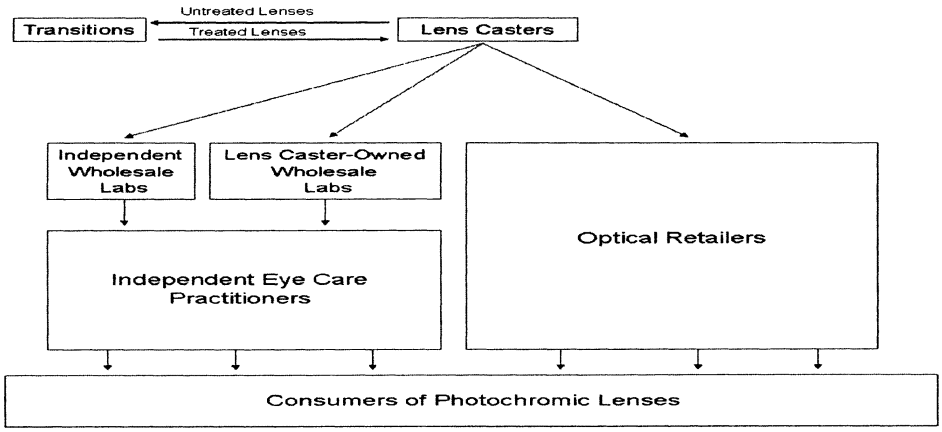


C. Transitions' Conduct

Transitions has maintained its dominance, in significant part, by implementing exclusive agreements and other exclusionary policies at nearly every level of the photochromic lens distribution chain.

1. Exclusionary Practices with Direct Customers (Lens Casters)

In 1999, Corning Inc. introduced a new plastic photochromic lens, Sunsensors®, which was a direct challenge to Transitions. Transitions responded to this competitive threat by terminating the first lens caster that began selling the new SunSensors® lens, Signet Armorlite, Inc. ("Signet"), and by adopting a general policy not to deal with lens casters that sold or promoted a competing photochromic lens. Transitions furthered its anticompetitive and exclusionary efforts by, among other things: (i) entering into exclusive agreements with certain lens casters; (ii) announcing to the industry its policy of dealing only with lens casters that sold its lenses on an exclusive basis; (iii) threatening to terminate lens casters that did not want to sell its lenses on an exclusive basis; and (iv) terminating a second lens caster, Vision-Ease Lens ("Vision-Ease"), that developed a photochromic treatment, LifeRx®, to apply to its own ophthalmic lenses. Because of Transitions' course of conduct, even lens casters that have not signed exclusive agreements have a clear understanding that they cannot sell or promote a competing photochromic lens without being terminated by Transitions.

Transitions' exclusive policy is coercive to lens casters and acts as a powerful deterrent against selling a competing photochromic treatment because Transitions is such a large part of the photochromic lens market. Losing the sales generated by Transitions' photochromic lenses can jeopardize up to 40 percent of a lens caster's overall profit. Additionally, losing the ability to sell Transitions' photochromic lenses can endanger a lens caster's sales of clear lenses because many retailers and wholesale labs (and their eye care practitioner customers) prefer to buy both clear and photochromic versions of the same lens.

For all these reasons, Transitions has succeeded in foreclosing competitors from dealing with lens casters collectively accounting for over 85 percent of photochromic lens sales in the United States. These lens casters deal with Transitions on an exclusive basis and will not do business with any other suppliers of photochromic treatments.

2. Exclusionary Practices with Indirect Customers (Retailers and Wholesale Labs)

In an effort to shut out its rivals, Transitions also directed its exclusionary practices at its indirect customers: wholesale labs and retailers. In 2005, in order to mitigate the new competitive threat posed by Vision-Ease's introduction of LifeRx®, Transitions began an exclusionary agreement campaign with major retailers. Transitions induced over 50 retailers, including many of the largest chains, with up-front payments and/or rebates to enter into long term exclusive agreements that were difficult to terminate.

Transitions also has entered into over 100 agreements with wholesale labs that require the wholesale labs to promote Transitions' lenses as their "preferred" photochromic lens and to withhold normal sales efforts for competing photochromic lenses in exchange for rebates or other items of pecuniary value. Further, at least 50 percent of all wholesale labs are owned by lens casters that sell only Transitions' lenses. Because these lens casters generally use their wholesale labs to promote and sell primarily their own brand of lenses, this further impairs competitors' access to wholesale labs.

Additionally, Transitions' agreements with retailers and wholesale labs generally provide a discount only if the customer purchases all or almost all of its photochromic lens needs from Transitions. Because no other supplier has a photochromic treatment that applies to a full line of ophthalmic lenses, Transitions' discount structure impairs the ability of rivals to compete for sales to these customers. It also erects a significant entry barrier by limiting the ability of a rival to enter the market with a new photochromic treatment that applies to less than a full line of ophthalmic lenses.

Transitions' exclusionary practices with retailers and wholesale labs foreclose rivals, in whole or in part, from a substantial share – as much as 40 percent or more – of the retailer and wholesale lab distribution channels.

D. Competitive Impact of Transitions' Conduct

Transitions' course of conduct harms competition by marginalizing existing competitors and by deterring new entry. Faced with the threat of termination by Transitions, no major lens caster operating in the United States has been willing to carry the plastic SunSensors® lens since Transitions terminated Signet. Without access to effective distribution, Corning has been unable to pose a competitive threat to Transitions' monopoly, and has had little incentive to invest in research and development to improve its product. Further, some lens casters would likely develop and/or sell competing photochromic lenses, but Transitions' exclusive dealing – particularly its "all or nothing" ultimatum to lens casters – effectively deters new entrants.

Transitions' conduct at the wholesale lab and retailer levels also has harmed competition. For example, Transitions deprived Vision-Ease of access to many large retailers (one of the most efficient channels for distributing photochromic lenses to consumers), which blunted the force of its entry into the market and diminished its ability to constrain Transitions' exercise of monopoly power. Potential entrants observed Transitions' exclusionary campaign against Vision-Ease and have been deterred from entering the market.

Further, Transitions' exclusionary policies at all levels of the distribution chain deter potential competitors from entering the market on an incremental basis. Transitions' "all or nothing" policy with lens casters deters them from purchasing or developing a competing photochromic treatment that can be applied to less than a full line of ophthalmic lenses because the lens caster is unlikely to be able to recoup the substantial profits it would have made from the sale of the full line of Transitions' products. Similarly, the structure of Transitions' discounts to retailers and wholesale labs – which are generally conditioned on the customer's purchase of all or almost all of Transitions' products – places competitors with less than a full line of photochromic lenses at a disadvantage when competing for this business.

Transitions' exclusionary practices have likely increased prices and reduced output. For example, because it does not face effective competition, Transitions has been able to ignore consumer demand and refuse to supply its low-priced, private label photochromic lens in the U.S. market, even though Transitions offers this product in other markets.

Transitions' conduct has also harmed consumers by depriving rivals of the incentive to innovate and to develop competing photochromic lenses. If faced with more competition, Transitions would also likely have a greater incentive to invest additional resources in research and development.

There are no procompetitive efficiencies that justify Transitions' conduct or outweigh its substantial anticompetitive effects.

*II. Legal Analysis*

Exclusive dealing by a monopolist is condemned under Section 2 of the Sherman Act, 15 U.S.C. § 2, when the challenged conduct significantly impairs the ability of rivals to compete with the monopolist and thus to constrain its exercise of monopoly power.[2] Agreements that foreclose key distribution channels are often found to have this proscribed effect and are deemed illegal.[3]

The factual allegations in the Complaint are consistent with a finding of monopoly power and competitive harm. Transitions' policy of requiring exclusivity from its lens caster customers has foreclosed its rivals from over 85 percent of available sales opportunities at this level of the distribution chain. This foreclosure is particularly significant because nearly all photochromic lenses are first sold by lens casters – attempts to fabricate photochromic lenses at the wholesale lab or retailer level have largely been abandoned as uneconomical. The competitive impact of this exclusive dealing with lens casters is amplified by Transitions' exclusionary practices with retailers and wholesale labs, which

[2] *See, e.g., Aspen Skiing Co. v. Aspen Highlands Skiing Corp.*, 472 U.S. 585, 605 & n.32 (1985) (exclusionary conduct "tends to impair the opportunities of rivals" but "either does not further competition on the merits or does so in an unnecessarily restrictive way") (citations omitted); *Lorain Journal Co. v. United States*, 342 U.S. 143, 151-54 (1951) (condemning newspaper's refusal to deal with customers that also advertised on rival radio station because it harmed the radio station's ability to compete);*United States v. Microsoft Corp.*, 253 F.3d 34, 68-71 (D.C. Cir. 2001) (condemning exclusive agreements because they prevented rivals from "pos[ing] a real threat to Microsoft's monopoly"); *United States v. Dentsply Int'l, Inc.*, 399 F.3d 181, 191 (3d Cir. 2005) ("test is not total foreclosure but whether the challenged practices bar a substantial number of rivals or severely restrict the market's ambit"); *LePage's, Inc. v. 3M*, 324 F.3d 141, 159-60 (3d Cir. 2003) (same).

[3] *See, e.g., Microsoft*, 253 F.3d at 64 (condemning exclusive agreements that foreclosed rivals from "cost-efficient" distribution channels); *LePage's*, 324 F.3d at 159-60 (finding "exclusionary conduct cut LePage's off from key retail pipelines"). *See also* Richard A. Posner, ANTITRUST LAW 229 (2d ed. 2002) (noting that exclusive dealing may "increase the scale necessary for new entry, and . . . increase the time required for entry and hence the opportunity for monopoly pricing").

further foreclose rivals, in whole or in part, from as much as 40 percent or more of these downstream distribution channels. Transitions' exclusionary conduct has thus likely caused higher prices, lower output, and reduced innovation and consumer choice.

A monopolist may rebut a such a showing of competitive harm by demonstrating that the challenged conduct is reasonably necessary to achieve a procompetitive benefit.[4] Any proffered justification, if proven, must be balanced against the harm caused by the challenged conduct.[5]

No procompetitive efficiencies justify Transitions' exclusionary and anticompetitive conduct. Transitions cannot show that the exclusive arrangements were reasonably necessary to achieve a procompetitive benefit, such as protecting Transitions' intellectual property or technical know-how, or preventing interbrand free-riding.[6] Transitions does not transfer substantial intellectual property or technical know-how to its customers, and even if it did, any such transfer would likely be protected by existing confidentiality agreements.

A concern about interbrand free-riding also does not justify the substantial anticompetitive effects found here. The vast majority of Transitions' promotional efforts are brand specific, reducing the significance of any free-riding concern.[7] While Transitions' marketing efforts may generate some consumer interest in the product category as a whole – and not just in Transitions' own products – this is a part of the natural competitive process. This type of consumer response does not raise a free-riding concern sufficient to justify the substantial anticompetitive effects found here.[8]

*III. The Order*

The proposed Order remedies Transitions' anticompetitive and exclusionary conduct and imposes certain fencing-in requirements that are designed to prevent *de facto* exclusive dealing.[9] Paragraph II of the Order addresses the core of Transitions' exclusionary conduct and seeks to lower entry barriers and to restore competition. Paragraph III requires Transitions to implement an antitrust compliance program, which includes providing notice of this Order to Transitions' customers. Paragraphs IV-VI impose reporting and other compliance requirements. The Order expires in 20 years unless otherwise indicated.

Paragraph II.A prohibits Transitions from adopting or implementing any agreement or policy that results in "exclusivity" with lens casters, or its "Direct Customers." "Exclusivity" is defined in the Order to include any requirement that a customer limit or refrain from dealing with a competing photochromic lens, as well as any requirement that a customer give Transitions' products more favorable treatment as compared to a competitor's products.

Paragraph II.B allows Transitions to enter into exclusive agreements with retailers and wholesale labs ("Indirect Customers"), provided certain safeguards are met. Specifically, any exclusive agreements with Indirect Customers must: i) be terminable without cause, and without penalty, on 30 days written notice; ii) be available on a partially exclusive basis, if requested by the customer; and iii) not offer flat payments of monies in exchange for exclusivity. These provisions, along with Paragraph II.E, which prohibits Transitions from bundling discounts, are designed to enable a competitor or entrant to compete for a customer's business, even if it does not offer a photochromic treatment that applies to a full line of ophthalmic lenses. Creating conditions conducive to effective entry on an incremental basis is likely to hasten new entry and to restore competition.

Under Paragraph II.C, Transitions may not limit its customers from communicating or discussing a competing photochromic lens with consumers and others. This Paragraph also requires Transitions to allow a lens caster or another customer that sells Transitions' photochromic treatment on a particular brand of lens to sell a competitors' photochromic treatment on the same brand.

Paragraph II.D has two provisions designed to prevent *de facto* exclusive dealing through pricing policies. First, Transitions cannot offer market share discounts, *i.e.*, discounts based on the percentage of a customer's sales of Transitions' lenses as a percentage of all photochromic lens sales. Second, Transitions cannot offer discounts that are applied retroactively once a customer reaches a specified threshold. For example, Transitions may provide a discount on sales beyond 1000 units but it may not lower the price of the first 999 units if and when the customer buys the 1000$^{th}$ unit. The provisions in Paragraph II.D, along with Paragraph II.E, will be in effect for 10 years.

Notwithstanding any provision of the Order, Paragraph II.G explicitly allows Transitions to provide volume discounts that reflect certain cost differences, and to offer discounts to meet competition. It also allows Transitions to require that any monies it provides to customers be used solely for the manufacture, promotion or sale of Transitions lenses.

Finally, Paragraph II.F prohibits Transitions from retaliating against a customer that purchases or sells Transitions lenses on a non-exclusive basis.

By direction of the Commission.

**Donald S. Clark,**

*Secretary.*

[FR Doc. 2010–4979 Filed 3–8–10; 7:23 am]

**BILLING CODE 6750–01–S**

[4] *E.g., Microsoft*, 253 F.3d at 59.

[5] *Id.*

[6] "Interbrand free-riding" occurs when a manufacturer provides services, training, or other incentives in the promotion of its products for which it cannot easily charge its dealer, and that dealer "free-rides" on these demand-generating services by substituting a cheaper, more profitable product made by another manufacturer that does not invest in comparable services. *See generally* Howard P. Marvel, *Exclusive Dealing*, 25 J.L. & Econ. 1, 8 (1982).

[7] *See United States v. Dentsply Int'l, Inc.*, 277 F. Supp. 2d 387, 445 (D. Del. 2003), *aff'd in rel. part*, 399 F.3d at 196-97; Marvel, *Exclusive Dealing*, 25 J.L. & Econ. at 8 (explaining that an interbrand free-riding justification "does not apply if the promotional investment is purely brand specific. In such cases, the dealer will not be in a position to switch customers from brand to brand.").

[8] *See In re Polygram*, 136 F.T.C. 310, 361-62 (2003), *aff'd*, 416 F.3d 29, 37-38 (D.C. Cir. 2005).

[9] We use the term "*de facto* exclusive dealing" to refer to practices that significantly deter a customer from purchasing or selling a competing photochromic lens.

## DEPARTMENT OF HEALTH AND HUMAN SERVICES

### Centers for Disease Control and Prevention

**[30Day–10–09AM]**

### Agency Forms Undergoing Paperwork Reduction Act Review

The Centers for Disease Control and Prevention (CDC) publishes a list of information collection requests under review by the Office of Management and Budget (OMB) in compliance with the Paperwork Reduction Act (44 U.S.C. Chapter 35). To request a copy of these requests, call the CDC Reports Clearance Officer at (404) 639–5960 or send an e-mail to *omb@cdc.gov*. Send written comments to CDC Desk Officer, Office of Management and Budget, Washington, DC or by fax to (202) 395–5806. Written comments should be received within 30 days of this notice.

**Proposed Project**

Prevalence Survey of Healthcare Associated Infections (HAIs) and

Antimicrobial Use in U.S. Acute Care Hospitals—New—National Center for Emerging and Zoonotic Infectious Diseases (NCEZID) (proposed), Centers for Disease Control and Prevention (CDC).

*Background and Brief Description*

CDC is requesting OMB approval to conduct two surveys to obtain national estimates of HAI prevalence and antimicrobial use in the United States. Preventing HAIs is a CDC priority, and an essential step in reducing the occurrence of HAIs is to accurately estimate the burden of these infections in U.S. hospitals and to describe the types of HAIs and their causative organisms, including antimicrobial-resistant pathogens.

The scope and magnitude of HAIs in the U.S. were last directly estimated in the 1970s and 1980s by CDC's Study on the Efficacy of Nosocomial Infection Control (SENIC), in which comprehensive data were collected from a sample of 338 hospitals; 5% of hospitalized patients acquired an infection not present at the time of admission. CDC's current HAI surveillance system, the National Healthcare Safety Network (NHSN) (OMB Control No. 0920–0666, expiration date 9/30/2012), focuses instead on device-associated and procedure-associated infections in a variety of patient locations, and does not receive data on all types of HAIs to make hospital-wide burden estimates. The purpose of this information collection request is to assess the magnitude and types of HAIs and antimicrobial use occurring in all patient populations within acute care hospitals. This information will be used to inform decisions made by local and national policy makers and hospital infection control personnel regarding appropriate targets and strategies for preventing HAIs and the emergence of antimicrobial-resistant pathogens and encouraging appropriate antimicrobial use. Such assessments can be obtained in periodic national prevalence studies, such as those that have been conducted in several European countries.

CDC proposes to conduct two surveys to collect this data. The first survey will be a limited roll-out survey and will be conducted in 30 facilities across 10 states in collaboration with state public health authorities and CDC's Emerging Infections Program (EIP). The survey will be conducted on a single day in participating facilities. Infection Control Practitioners in participating facilities, such as infection control personnel, will collect limited demographic and clinical information on a sample of eligible inpatients and, on the same day, EIP site personnel will collect information on HAIs and antimicrobial use for surveyed patients who are on antimicrobial therapy at the time of the survey. The second survey will involve 500 facilities across the same 10 states and use the same methodology. As with the first survey, CDC will collaborate with state public health authorities and EIP sites.

CDC has made the following assumptions in calculating the response burden. Infection Control Practitioners will be asked to collect a minimal amount of data, limited to basic demographic and risk factor/antimicrobial use information. We anticipate that this data collection will take 5 minutes per patient. EIP personnel will complete data collection on antimicrobial use and HAIs. CDC estimates that this data collection will take approximately 15 minutes per patient.

CDC has assumed an average daily patient census of 250 patients for each of the 30 participating facilities in Survey #1. An Infection Control Practitioner (ICP) in his/her own facility will be asked to review ⅓ or 33% of this number (250); thus, the ICP would review 82.5 records (rounded up to 83). This number is estimated to be the same in each phase of the prevalence survey effort.

EIP Personnel will be reviewing medical records of approximately 40% of all patients surveyed in their EIP site in both surveys #1 and #2. In Survey #1, the total number of patient records surveyed in each EIP site (assuming 3 facilities in each EIP site and 83 patient records per site) is 247.5 patient records. Forty percent of that number (247.5) is 99 patient records or 99 responses per EIP site. In Survey #2, there will be more facilities participating per EIP site (50 facilities per EIP site for a total of 500 facilities). Again, CDC assumes 82.5 records surveyed per site (50 × 82.5) or a total of 4,125 patient records. As above, EIP personnel in each of the 10 sites will review approximately 40% of the 4,125 patient records per site or 1,650 patient records.

CDC will use the data provided to estimate the prevalence of HAIs and antimicrobial use across this sample of U.S. hospitals as well as to estimate the distribution of infection types, causative organisms, and nature of and rationale for antimicrobial use.

This proposed project supports CDC's Strategic Goal of "Healthy Healthcare Settings," specifically the objectives to "Promote compliance with evidence-based guidelines for preventing, identifying, and managing disease in healthcare settings" and "Prevent adverse events in patients and healthcare workers in healthcare settings."

There are no costs to respondents, other than their time to complete the survey. The total annualized burden for this data collection is 8,039 hours.

ESTIMATE OF ANNUALIZED BURDEN HOURS

| Respondents | Number of respondents | Number of responses per respondent | Average burden per response (in hours) |
|---|---|---|---|
| Infection Control Practitioners—Survey #1 | 30 | 83 | 5/60 |
| EIP Personnel—Survey #1 | 10 | 99 | 15/60 |
| Infection Control Practitioners—Survey #2 | 500 | 83 | 5/60 |
| EIP Personnel—Survey #2 | 10 | 1,650 | 15/60 |

Dated: February 26, 2010.

**Maryam I. Daneshvar,**

*Acting Reports Clearance Officer, Centers for Disease Control and Prevention.*

[FR Doc. 2010–4885 Filed 3–8–10; 8:45 am]

**BILLING CODE 4163–18–P**

## DEPARTMENT OF HEALTH AND HUMAN SERVICES

### Administration for Children and Families

### Proposed Information Collection Activity; Comment Request

*Proposed Projects*:

*Title:* Child Support Enforcement Program Expenditure Report (Form OCSE–396A) and the Child Support Enforcement Program Collection Report (Form OCSE–34A).

*OMB No.:* 0970–0181.

*Description:* State and Tribal agencies administering the Child Support Enforcement Program under Title IV–D of the Social Security Act are required to provide information each fiscal quarter to the Office of Child Support Enforcement (OCSE) concerning administrative expenditures and the receipt and disposition of child support payments from non-custodial parents. State title IV–D agencies report quarterly expenditures and collections using Forms OCSE–396A and OCSE–34A, respectively. Tribal title IV–D agencies report quarterly expenditures using Form SF–269, as prescribed in program regulations, and formerly reported quarterly collections using only a modified version of Form OCSE–34A. The information collected on these reporting forms is used to compute quarterly grant awards to States and Tribes, the annual incentive payments to States and provides valuable information on program finances. This information is also included in a published annual statistical and financial report, available to the general public.

Under Public Law 111–5, the "American Recovery and Reinvestment Act of 2009" (ARRA), enacted in February 2009, the availability of Federal funding to State administered child support enforcement programs was substantially increased with a change in methodology of calculating these funds. We propose to formally incorporate this necessary revision into the quarterly expenditure report and to update the existing quarterly collection report to enable the same version of that form to be used by both State and Tribal IV–D agencies. We also propose to review other data entry elements and the accompanying instructions in both data collection forms to assure that the financial information requested from States and Tribes remains relevant and will assure that OCSE collects the information needed in the most efficient format feasible.

*Respondents:* State agencies (including the District of Columbia, Puerto Rico, Guam and the Virgin Islands) administering the Child Support Enforcement Program. Tribal agencies with approved plans to administer the Child Support Enforcement Program.

ANNUAL BURDEN ESTIMATES

| Instrument | Number of respondents | Number of responses per respondent | Average burden hours per response | Total burden hours |
|---|---|---|---|---|
| OCSE–396A | 54 | 4 | 8 | 1,728 |
| OCSE–34A | 100 | 4 | 8 | 3,200 |

Estimated Total Annual Burden Hours: 4,928.

In compliance with the requirements of Section 506(c)(2)(A) of the Paperwork Reduction Act of 1995, the Administration for Children and Families is soliciting public comment on the specific aspects of the information collection described above. Copies of the proposed collection of information can be obtained and comments may be forwarded by writing to the Administration for Children and Families, Office of Administration, Office of Information Services, 370 L'Enfant Promenade, SW., Washington, DC 20447, *Attn:* ACF Reports Clearance Officer. *E-mail address: infocollection@acf.hhs.gov.* All requests should be identified by the title of the information collection.

*The Department specifically requests comments on:* (a) Whether the proposed collection of information is necessary for the proper performance of the functions of the agency, including whether the information shall have practical utility; (b) the accuracy of the agency's estimate of the burden of the proposed collection of information; (c) the quality, utility, and clarity of the information to be collected; and (d) ways to minimize the burden of the collection of information on respondents, including through the use of automated collection techniques or other forms of information technology. Consideration will be given to comments and suggestions submitted within 60 days of this publication.

Dated: March 3, 2010.

**Robert Sargis,**

*Reports Clearance Officer.*

[FR Doc. 2010–4895 Filed 3–8–10; 8:45 am]

**BILLING CODE 4184–01–P**

## DEPARTMENT OF HEALTH AND HUMAN SERVICES

### Food and Drug Administration

**[Docket Nos. FDA–2008–P–0435 and FDA–2008–P–0554]**

### Determination That DOVONEX (Calcipotriene) Ointment, 0.005%, Was Not Withdrawn From Sale for Reasons of Safety or Effectiveness

**AGENCY:** Food and Drug Administration, HHS.

**ACTION:** Notice.

**SUMMARY:** The Food and Drug Administration (FDA) is announcing its determination that DOVONEX (calcipotriene) Ointment, 0.005%, was not withdrawn from sale for reasons of safety or effectiveness. This determination will allow FDA to approve abbreviated new drug applications (ANDAs) for calcipotriene Ointment, 0.005%, if all other legal and regulatory requirements are met.

**FOR FURTHER INFORMATION CONTACT:** David Joy, Center for Drug Evaluation and Research, Food and Drug Administration, 10903 New Hampshire

Ave., Bldg. 51, rm. 6358, Silver Spring, MD 20993–0002, 301–796–3601.

**SUPPLEMENTARY INFORMATION:** In 1984, Congress enacted the Drug Price Competition and Patent Term Restoration Act of 1984 (Public Law 98–417) (the 1984 amendments), which authorized the approval of duplicate versions of drug products approved under an ANDA procedure. ANDA applicants must, with certain exceptions, show that the drug for which they are seeking approval contains the same active ingredient in the same strength and dosage form as the "listed drug," which is a version of the drug that was previously approved. ANDA applicants do not have to repeat the extensive clinical testing otherwise necessary to gain approval of a new drug application (NDA). The only clinical data required in an ANDA are data to show that the drug that is the subject of the ANDA is bioequivalent to the listed drug.

The 1984 amendments include what is now section 505(j)(7) of the Federal Food, Drug, and Cosmetic Act (21 U.S.C. 355(j)(7)), which requires FDA to publish a list of all approved drugs. FDA publishes this list as part of the "Approved Drug Products With Therapeutic Equivalence Evaluations," which is known generally as the "Orange Book." Under FDA regulations, drugs are removed from the list if the agency withdraws or suspends approval of the drug's NDA or ANDA for reasons of safety or effectiveness, or if FDA determines that the listed drug was withdrawn from sale for reasons of safety or effectiveness (21 CFR 314.162). Under § 314.161(a)(1) (21 CFR 314.161(a)(1)), the agency must determine whether a listed drug was withdrawn from sale for reasons of safety or effectiveness before an ANDA that refers to that listed drug may be approved. FDA may not approve an ANDA that does not refer to a listed drug.

DOVONEX (calcipotriene) Ointment, 0.005%, is the subject of NDA 20–273, held by LEO Pharmaceutical Products Ltd. (LEO) and initially approved on December 29, 1993. DOVONEX is indicated for the treatment of plaque psoriasis in adults. In its annual report dated February 28, 2008, LEO notified FDA that DOVONEX (calcipotriene) Ointment, 0.005%, had been discontinued, and FDA moved the drug product to the "Discontinued Drug Product List" section of the Orange Book.

Lachman Consultant Services, Inc., submitted a citizen petition dated July 25, 2008 (Docket No. FDA–2008–P–0435), under 21 CFR 10.30, requesting that the agency determine whether DOVONEX (calcipotriene) Ointment, 0.005%, was withdrawn from sale for reasons of safety or effectiveness. A second citizen petition was submitted by Mya Thomae Consulting, Inc., dated October 13, 2008 (Docket No. FDA–2008–P–0554), requesting that the agency determine whether DOVONEX (calcipotriene) Ointment, 0.005%, was withdrawn from sale for reasons of safety or effectiveness.

FDA has reviewed its records and, under § 314.161, has determined that DOVONEX (calcipotriene) Ointment, 0.005%, was not withdrawn from sale for reasons of safety or effectiveness. The petitioners identified no data or other information suggesting that DOVONEX (calcipotriene) Ointment, 0.005%, was withdrawn for reasons of safety or effectiveness. FDA has independently evaluated relevant literature and data for possible postmarketing adverse events and has found no information that would indicate that this product was withdrawn from sale for reasons of safety or effectiveness. Accordingly, the agency will continue to list DOVONEX (calcipotriene) Ointment, 0.005%, in the "Discontinued Drug Product List" section of the Orange Book. The "Discontinued Drug Product List" delineates, among other items, drug products that have been discontinued from marketing for reasons other than safety or effectiveness. ANDAs that refer to DOVONEX (calcipotriene) Ointment, 0.005%, may be approved by the agency if all other legal and regulatory requirements for the approval of ANDAs are met. If FDA determines that labeling for this drug product should be revised to meet current standards, the agency will advise ANDA applicants to submit such labeling.

Dated: March 3, 2010.

**Leslie Kux,**

*Acting Assistant Commissioner for Policy.*

[FR Doc. 2010–4925 Filed 3–8–10; 8:45 am]

**BILLING CODE 4160–01–S**

---

## DEPARTMENT OF HEALTH AND HUMAN SERVICES

### Food and Drug Administration

**[Docket No. FDA–2010–N–0108]**

### Training Program for Regulatory Project Managers; Information Available to Industry

**AGENCY:** Food and Drug Administration, HHS.

**ACTION:** Notice.

**SUMMARY:** The Food and Drug Administration (FDA) Center for Drug Evaluation and Research (CDER) is announcing the continuation of the Regulatory Project Management Site Tours and Regulatory Interaction Program (the Site Tours Program). The purpose of this document is to invite pharmaceutical companies interested in participating in this program to contact CDER.

**DATES:** Pharmaceutical companies may submit proposed agendas to the agency by May 10, 2010 **Federal Register**].

**FOR FURTHER INFORMATION CONTACT:** Beth Duvall-Miller, Center for Drug Evaluation and Research, Food and Drug Administration, 10903 New Hampshire Ave., Bldg. 22, rm. 6466, Silver Spring, MD 20993–0002, 301–796–0700, e-mail: *elizabeth.duvallmiller@fda.hhs.gov*.

**SUPPLEMENTARY INFORMATION:**

### I. Background

An important part of CDER's commitment to make safe and effective drugs available to all Americans is optimizing the efficiency and quality of the drug review process. To support this primary goal, CDER has initiated various training and development programs to promote high performance in its regulatory project management staff. CDER seeks to significantly enhance review efficiency and review quality by providing the staff with a better understanding of the pharmaceutical industry and its operations. To this end, CDER is continuing its training program to give regulatory project managers the opportunity to tour pharmaceutical facilities. The goals are to provide the following: (1) First hand exposure to industry's drug development processes and (2) a venue for sharing information about project management procedures (but not drug-specific information) with industry representatives.

### II. The Site Tours Program

In this program, over a 2- to 3-day period, small groups (five or less) of regulatory project managers, including a senior level regulatory project manager, can observe operations of pharmaceutical manufacturing and/or packaging facilities, pathology/toxicology laboratories, and regulatory affairs operations. Neither this tour nor any part of the program is intended as a mechanism to inspect, assess, judge, or perform a regulatory function, but is meant rather to improve mutual understanding and to provide an avenue for open dialogue. During the Site Tours Program, regulatory project managers

will also participate in daily workshops with their industry counterparts, focusing on selective regulatory issues important to both CDER staff and industry. The primary objective of the daily workshops is to learn about the team approach to drug development, including drug discovery, preclinical evaluation, tracking mechanisms, and regulatory submission operations. The overall benefit to regulatory project managers will be exposure to project management, team techniques, and processes employed by the pharmaceutical industry. By participating in this program, the regulatory project manager will grow professionally by gaining a better understanding of industry processes and procedures

### III. Site Selection

All travel expenses associated with the site tours will be the responsibility of CDER; therefore, selection will be based on the availability of funds and resources for each fiscal year. Selection will also be based on firms having a favorable facility status as determined by FDA's Office of Regulatory Affairs District Offices in the firms' respective regions. Firms interested in offering a site tour or learning more about this training opportunity should respond by (see **DATES**) by submitting a proposed agenda to Beth Duvall-Miller (see **FOR FURTHER INFORMATION CONTACT**).

Dated: March 3, 2010.

**Leslie Kux,**

*Acting Assistant Commissioner for Policy.*

[FR Doc. 2010–4924 Filed 3–8–10; 8:45 am]

**BILLING CODE 4160–01–S**

---

## DEPARTMENT OF HEALTH AND HUMAN SERVICES

### National Institutes of Health

### National Institute on Alcohol Abuse and Alcoholism; Notice of Closed Meeting

Pursuant to section 10(d) of the Federal Advisory Committee Act, as amended (5 U.S.C. App.), notice is hereby given of the following meeting.

The meeting will be closed to the public in accordance with the provisions set forth in sections 552b(c)(4) and 552b(c)(6), Title 5 U.S.C., as amended. The grant applications and the discussions could disclose confidential trade secrets or commercial property such as patentable material, and personal information concerning individuals associated with the grant applications, the disclosure of which would constitute a clearly unwarranted invasion of personal privacy.

*Name of Committee:* National Institute on Alcohol Abuse and Alcoholism, Special Emphasis Panel, Member Conflicts SEP.

*Date:* April 22, 2010.

*Time:* 12 p.m. to 2 p.m.

*Agenda:* To review and evaluate grant applications.

*Place:* NIAAA, 5635 Fishers, Rockville, MD 20852.

*Contact Person:* Lorraine Gunzerath, PhD, MBA, Scientific Review Officer, National Institute on Alcohol Abuse and Alcoholism, Office of Extramural Activities, Extramural Project Review Branch, 5635 Fishers Lane, Room 2121, Bethesda, MD 20892–9304, 301–443–2369, *lgunzera@mail.nih.gov.*

(Catalogue of Federal Domestic Assistance Program Nos. 93.271, Alcohol Research Career Development Awards for Scientists and Clinicians; 93.272, Alcohol National Research Service Awards for Research Training; 93.273, Alcohol Research Programs; 93.891, Alcohol Research Center Grants; 93.701, ARRA Related Biomedical Research and Research Support Awards., National Institutes of Health, HHS)

Dated: February 26, 2010.

**Jennifer Spaeth,**

*Director, Office of Federal Advisory Committee Policy.*

[FR Doc. 2010–4586 Filed 3–8–10; 8:45 am]

**BILLING CODE 4140–01–M**

---

## DEPARTMENT OF HEALTH AND HUMAN SERVICES

### Centers for Disease Control and Prevention

### Subcommittee on Procedures Reviews (SPR), Advisory Board on Radiation and Worker Health (ABRWH), National Institute for Occupational Safety and Health (NIOSH)

In accordance with section 10(a)(2) of the Federal Advisory Committee Act (Pub. L. 92–463), the Centers for Disease Control and Prevention (CDC), announces the following meeting for the aforementioned subcommittee:

*Time and Date:* 9:30 a.m.–5 p.m., March 23, 2010.

*Place:* Cincinnati Airport Marriott, 2395 Progress Drive, Hebron, Kentucky 41018, Telephone: (859) 334–4611, Fax: (859) 334–4619.

*Status:* Open to the public, but without a public comment period. To access by conference call dial the following information 1(866) 659–0537, Participant Pass Code 9933701.

*Background:* The Advisory Board was established under the Energy Employees Occupational Illness Compensation Program Act of 2000 to advise the President on a variety of policy and technical functions required to implement and effectively manage the compensation program. Key functions of the Advisory Board include providing advice on the development of probability of causation guidelines that have been promulgated by the Department of Health and Human Services (HHS) as a final rule; advice on methods of dose reconstruction which have also been promulgated by HHS as a final rule; advice on the scientific validity and quality of dose estimation and reconstruction efforts being performed for purposes of the compensation program; and advice on petitions to add classes of workers to the Special Exposure Cohort (SEC).

In December 2000, the President delegated responsibility for funding, staffing, and operating the Advisory Board to HHS, which subsequently delegated this authority to CDC. NIOSH implements this responsibility for CDC. The charter was issued on August 3, 2001, renewed at appropriate intervals, and will expire on August 3, 2011.

*Purpose:* The Advisory Board is charged with (a) Providing advice to the Secretary, HHS, on the development of guidelines under Executive Order 13179; (b) providing advice to the Secretary, HHS, on the scientific validity and quality of dose reconstruction efforts performed for this program; and (c) upon request by the Secretary, HHS, advise the Secretary on whether there is a class of employees at any Department of Energy facility who were exposed to radiation but for whom it is not feasible to estimate their radiation dose, and on whether there is reasonable likelihood that such radiation doses may have endangered the health of members of this class. The Subcommittee on Procedures Reviews was established to aid the Advisory Board in carrying out its duty to advise the Secretary, HHS, on dose reconstruction. It is responsible for overseeing, tracking, and participating in the reviews of all procedures used in the dose reconstruction process by the NIOSH Office of Compensation Analysis and Support (OCAS) and its dose reconstruction contractor.

*Matters To Be Discussed:* The agenda for the Subcommittee meeting includes: the development of recommendations for an Advisory Board procedure for reviewing OCAS Program Evaluation Reports; and discussion of the following Oak Ridge Associated Universities & OCAS procedures: OTIB–013 ("Special External Dose Reconstruction Considerations for Mallinckrodt Workers"), OTIB–014 ("Rocky Flats Internal Dosimetry Co-Worker Extension"), OTIB–0029 ("Internal Dosimetry Coworker Data for Y–12"), OTIB–0049 ("Estimating Doses for Plutonium Strongly Retained in the Lung"), OTIB–0047 (External Radiation Monitoring at the Y–12 Facility During the 1948–1949 Period"), OTIB–0051 ("Effect of Threshold Energy and Angular Response of NTA Film on Missed Neutron Dose at the Oak Ridge Y–12 Facility"), OTIB–0054 ("Fission and Activation Product Assignment for Internal Dose-Related Gross Beta and Gross Gamma Analyses"), and OTIB–0070 ("Dose Reconstruction During Residual Radioactivity Periods at Atomic Weapons Employer Facilities"); and a continuation of the comment-resolution process for other dose reconstruction procedures under review by the Subcommittee.

The agenda is subject to change as priorities dictate.

This meeting is open to the public, but without a public comment period. In the event an individual wishes to provide comments, written comments may be submitted. Any written comments received will be provided at the meeting and should be submitted to the contact person below in advance of the meeting.

*Contact Person for More Information:* Theodore Katz, Executive Secretary, NIOSH, CDC, 1600 Clifton Road, Mailstop E–20, Atlanta, Georgia 30333, Telephone: (513) 533–6800, Toll Free: 1(800) CDC–INFO, E-mail *ocas@cdc.gov.*

The Director, Management Analysis and Services Office, has been delegated the authority to sign **Federal Register** notices pertaining to announcements of meetings and other committee management activities, for both CDC and the Agency for Toxic Substances and Disease Registry.

**Elaine L. Baker,**

*Director, Management Analysis and Services Office, Centers for Disease Control and Prevention.*

[FR Doc. 2010–4890 Filed 3–8–10; 8:45 am]

**BILLING CODE 4163–18–P**

## DEPARTMENT OF HEALTH AND HUMAN SERVICES

### National Institutes of Health

### National Institute of Nursing Research; Notice of Closed Meeting

Pursuant to section 10(d) of the Federal Advisory Committee Act, as amended (5 U.S.C. App.), notice is hereby given of the following meeting.

The meeting will be closed to the public in accordance with the provisions set forth in sections 552b(c)(4) and 552b(c)(6), Title 5 U.S.C., as amended. The grant applications and the discussions could disclose confidential trade secrets or commercial property such as patentable material, and personal information concerning individuals associated with the grant applications, the disclosure of which would constitute a clearly unwarranted invasion of personal privacy.

*Name of Committee:* National Institute of Nursing Research, Special Emphasis Panel, NINR Loan Repayment Program Review (L30/L40).

*Date:* March 29, 2010.

*Time:* 9 a.m. to 12 p.m.

*Agenda:* To review and evaluate grant applications.

*Place:* National Institutes of Health, One Democracy Plaza, 6701 Democracy Boulevard, Ste. 710, Bethesda, MD 20892. (Telephone Conference Call)

*Contact Person:* Mario Rinaudo, MD, Scientific Review Administrator, Office of Review, National Institute of Nursing Research, National Institutes of Health, 6701 Democracy Blvd (DEM 1), Suite 710, Bethesda, MD 20892, 301–594–5973, *mrinaudo@mail.nih.gov.*

Any interested person may file written comments with the committee by forwarding the statement to the Contact Person listed on this notice. The statement should include the name, address, telephone number and when applicable, the business or professional affiliation of the interested person.

(Catalogue of Federal Domestic Assistance Program Nos. 93.361, Nursing Research, National Institutes of Health, HHS)

Dated: March 1, 2010.

**Jennifer Spaeth,**

*Director, Office of Federal Advisory Committee Policy.*

[FR Doc. 2010–4753 Filed 3–8–10; 8:45 am]

**BILLING CODE 4140–01–M**

## DEPARTMENT OF HEALTH AND HUMAN SERVICES

### National Institutes of Health

### National Institute on Alcohol Abuse and Alcoholism; Notice of Closed Meeting

Pursuant to section 10(d) of the Federal Advisory Committee Act, as amended (5 U.S.C. App.), notice is hereby given of the following meeting.

The meeting will be closed to the public in accordance with the provisions set forth in sections 552b(c)(4) and 552b(c)(6), Title 5 U.S.C., as amended. The grant applications and the discussions could disclose confidential trade secrets or commercial property such as patentable material, and personal information concerning individuals associated with the grant applications, the disclosure of which would constitute a clearly unwarranted invasion of personal privacy.

*Name of Committee:* National Institute on Alcohol Abuse and Alcoholism Special Emphasis Panel; Review of Alcohol Resource Grant Applications.

*Date:* April 6, 2010.

*Time:* 2 p.m. to 6 p.m.

*Agenda:* To review and evaluate grant applications

*Place:* National Institutes of Health, 5635 Fishers Lane, Bethesda, MD 20892. (Telephone Conference Call)

*Contact Person:* Richard A Rippe, Ph.D., Scientific Review Officer, National Institute on Alcohol Abuse & Alcoholism, National Institutes of Health, 5635 Fishers Lane, Rm. 2109, Rockville, MD 20852, 301–443–8599, *rippera@mail.nih.gov.*

(Catalogue of Federal Domestic Assistance Program Nos. 93.271 Alcohol Research Career Development Awards for Scientists and Clinicians; 93.272, Alcohol National Research Service Awards for Research Training; 93.273, Alcohol Research Programs; 93.891, Alcohol Research Center Grants; 93.701, ARRA Related Biomedical Research and Research Support Awards, National Institutes of Health, HHS)

Dated: March 1, 2010.

**Jennifer Spaeth,**

*Director, Office of Federal Advisory Committee Policy.*

[FR Doc. 2010–4750 Filed 3–8–10; 8:45 am]

**BILLING CODE 4140–01–M**

## DEPARTMENT OF HEALTH AND HUMAN SERVICES

### Food and Drug Administration

**[Docket Nos. FDA–2005–C–0245, FDA–2005–C–0416, and FDA–2005–C–0504] (formerly Docket Nos. 2005C–0302, 2005C–0303, and 2005C–0304)**

### CIBA Vision Corp.; Withdrawal of Color Additive Petitions

**AGENCY:** Food and Drug Administration, HHS.

**ACTION:** Notice.

**SUMMARY:** The Food and Drug Administration (FDA) is announcing the withdrawal, without prejudice to a future filing, of three color additive petitions (CAP 5C0278, CAP 5C0279, and CAP 5C0280) proposing that the color additive regulations be amended to provide for the safe use of Color Index (C.I.) Pigment Violet 19, C.I. Pigment Yellow 154, and C.I. Pigment Red 122 as color additives in contact lenses.

**FOR FURTHER INFORMATION CONTACT:** Celeste Johnston, Center for Food Safety and Applied Nutrition (HFS–265), Food and Drug Administration, 5100 Paint Branch Pkwy., College Park, MD 20740–3835, 301–436–1282.

**SUPPLEMENTARY INFORMATION:** In a notice published in the **Federal Register** of August 17, 2005 (70 FR 48426), FDA announced that three color additive petitions had been filed by CIBA Vision Corp., 11460 Johns Creek Pkwy., Duluth, GA 30097–1556. The petitions proposed to amend the color additive regulations in Part 73 *Listing of Color Additives Exempt from Certification* (21 CFR part 73) to provide for the safe use of C.I. Pigment Violet 19 (CAP 5C0278, Docket No. FDA–2005–C–0245), C.I. Pigment Yellow 154 (CAP 5C0279, Docket No. FDA–2005–C–0416), and C.I. Pigment Red 122 (CAP 5C0280, Docket No. FDA–2005–C–0504) as color additives in contact lenses. CIBA Vision Corp. has now withdrawn the petitions without prejudice to a future filing (21 CFR 71.6(c)(2)).

Dated: February 18, 2010.

**Mitchell A. Cheeseman,**

*Acting Director, Office of Food Additive Safety, Center for Food Safety and Applied Nutrition.*

[FR Doc. 2010–4972 Filed 3–8–10; 8:45 am]

BILLING CODE 4160–01–S

## DEPARTMENT OF HOMELAND SECURITY

### National Protection and Programs Directorate

**[Docket No. DHS–2010–0018]**

### Agency Information Collection Activities: United States Visitor and Immigrant Status Indicator Technology (US–VISIT); Biometric Data Collection at the Ports of Entry

**AGENCY:** National Protection and Programs Directorate, DHS.

**ACTION:** 60-Day Notice and request for comments; Revision of existing information collection request: 1600–0006.

**SUMMARY:** The Department of Homeland Security, National Protection and Programs Directorate (NPPD), US–VISIT, has submitted the following Information Collection Request (ICR) to the Office of Management and Budget (OMB) for review and clearance in accordance with the Paperwork Reduction Act of 1995 (Pub. L. 104–13, 44 U.S.C. Chapter 35).

**DATES:** Comments are encouraged and will be accepted until May 10, 2010. This process is conducted in accordance with 5 CFR 1320.10.

**ADDRESSES:** Written comments and questions about this Information Collection Request should be forwarded to the NPPD/US–VISIT Program, Attn.: Steven P. Yonkers, *Steve.Yonkers@dhs.gov.* Written comments should reach the contact person listed no later than May 10, 2010. Comments must be identified by DHS–2010–0018 and may be submitted by *one* of the following methods:

- *Federal eRulemaking Portal: http://www.regulations.gov .*
- *E-mail: Steve.Yonkers@dhs.gov.* Include the docket number in the subject line of the message.

*Instructions:* All submissions received must include the words "Department of Homeland Security" and the docket number for this action. Comments received will be posted without alteration at *http://www.regulations.gov,* including any personal information provided.

**SUPPLEMENTARY INFORMATION:** The United States Visitor and Immigrant Status Indicator Technology (US–VISIT) Program was established by the Department of Homeland Security (DHS) to meet specific legislative mandates intended to strengthen border security, address critical needs in terms of providing decision-makers with critical information, and demonstrate progress toward performance goals for national security, expediting of trade and travel, and supporting immigration system improvements. US–VISIT collects and disseminates biometric information (digital fingerprint images and facial photos) from individuals during their entry into the United States. This information is disseminated to specific DHS components; other Federal agencies; Federal, State and local law enforcement agencies; and the Federal intelligence community to assist in the decisions they make related to, and in support of, the homeland security mission. Beginning on December 10, 2007, US–VISIT expanded the collection of fingerprints from two prints to ten. The new collection time of 35 seconds, an increase from the previous 15 seconds, is a result of this change, and includes officer instructions. Additionally, on December 19, 2008, DHS published a final rule, entitled "United States Visitor and Immigrant Status Indicator Technology Program (US–VISIT); Enrollment of Additional Aliens in US–VISIT; Authority To Collect Biometric Data From Additional Travelers and Expansion to the 50 Most Highly Trafficked Land Border Ports of Entry." 73 FR 77473. That rule became effective on January 18, 2009, and expanded the population of aliens subject to US–VISIT requirements.

The Office of Management and Budget is particularly interested in comments which:

1. Evaluate whether the proposed collection of information is necessary for the proper performance of the functions of the agency, including whether the information will have practical utility;

2. Evaluate the accuracy of the agency's estimate of the burden of the proposed collection of information, including the validity of the methodology and assumptions used;

3. Enhance the quality, utility, and clarity of the information to be collected; and

4. Minimize the burden of the collection of information on those who are to respond, including through the use of appropriate automated, electronic, mechanical, or other technological collection techniques or other forms of information technology, *e.g.,* permitting electronic submissions of responses.

### Analysis

*Agency:* Department of Homeland Security, NPPD, US–VISIT.

*Title:* US–VISIT Program.

*Form:* N/A.

*OMB Number:* 1600–0006.

*Frequency:* One-time collection.

*Affected Public:* Foreign visitors and immigrants into the United States.

*Number of Respondents:* 156,732,422.

*Estimated Time per Respondent:* 35 seconds.

*Total Burden Hours:* 1,520,304 annual burden hours.

*Total Burden Cost (capital/startup):* $0.

*Total Burden Cost (operating/maintaining):* $53,211,000.

Signed: March 2, 2010.

**Thomas Chase Garwood, III,**

*Chief Information Officer, National Protection and Programs Directorate, Department of Homeland Security.*

[FR Doc. 2010–4905 Filed 3–8–10; 8:45 am]

BILLING CODE 9110–9P–P

## DEPARTMENT OF THE INTERIOR

### Outer Continental Shelf (OCS) Scientific Committee—Notice of Renewal

**AGENCY:** Minerals Management Service (MMS), Interior.

**ACTION:** Notice of renewal of the Outer Continental Shelf Scientific Committee.

**SUMMARY:** Following consultation with the General Services Administration, notice is hereby given that the Secretary of the Interior is renewing the OCS Scientific Committee.

The OCS Scientific Committee provides advice on the feasibility, appropriateness, and scientific value of the OCS Environmental Studies Program to the Secretary of the Interior through the Director of the Minerals Management Service. The Committee reviews the relevance of the research and data being produced to meet MMS scientific information needs for decisionmaking and may recommend changes in scope, direction, and emphasis.

**FOR FURTHER INFORMATION CONTACT:** Ms. Jeryne Bryant, Minerals Management Service, Offshore Energy and Minerals Management, Herndon, Virginia 20170–4817, telephone, (703) 787–1213.

### Certification

I hereby certify that the renewal of the OCS Scientific Committee is in the

public interest in connection with the performance of duties imposed on the Department of the Interior by 43 U.S.C. 1331 *et seq.*

Dated: March 3, 2010.

**Ken Salazar,**

*Secretary of the Interior.*

[FR Doc. 2010–4976 Filed 3–8–10; 8:45 am]

**BILLING CODE 4310–MR–P**

## DEPARTMENT OF THE INTERIOR

### Office of the Special Trustee for American Indians

### Notice of Proposed Renewal of Information Collection: OMB Control Number 1035–0004, Trust Funds for Tribes and Individual Indians

**AGENCY:** Office of the Special Trustee for American Indians, Interior.

**ACTION:** Notice and request for comments.

**SUMMARY:** In compliance with section 3506(c)(2)(A) of the Paperwork Reduction Act of 1995, the Office of the Special Trustee for American Indians, Department of the Interior (DOI), announces that it has submitted a request for proposed extension of an information collection to the Office of Management and Budget and requests public comments on this submission.

**DATES:** OMB has up to 60 days to approve or disapprove the information collection request, but may respond after 30 days; therefore, public comments should be submitted to OMB by *April 8, 2010,* in order to be assured of consideration.

**ADDRESSES:** Send your written comments by facsimile to (202) 395–5806 or e-mail (*OIRA_DOCKET@omb.eop.gov*) to the Office of Information and Regulatory Affairs, Office of Management and Budget, Attention: Department of the Interior Desk Officer (1035–0004). Also, please send a copy of your comments to U.S. Department of the Interior, Office of the Special Trustee for American Indians, Attn. John Marshall, 4400 Masthead Street, NE., Albuquerque, New Mexico 87109, or via e-mail to *john_marshall@ost.doi.gov.* Individuals providing comments should reference OMB control number 1035–0004, "Trust Funds for Tribes and Individual Indians, 25 CFR 115."

**FOR FURTHER INFORMATION CONTACT:** Requests for additional information on this information collection should be directed to John Marshall at U.S. Department of the Interior, Office of the Special Trustee for American Indians, 4400 Masthead Street, NE., Albuquerque, New Mexico 87109. You may also e-mail requests for further information to him at *john_marshall@ost.doi.gov* or call (505) 816–1096.

**SUPPLEMENTARY INFORMATION:**

### I. Abstract

Office of Management and Budget (OMB) regulations at 5 CFR 1320, which implement the Paperwork Reduction Act of 1995 (Pub. L. 104–13), require that interested members of the public and affected parties have an opportunity to comment on information collection and recordkeeping activities (*see* 5 CFR 1320.8(d)). This notice identifies an information collection activity that the Office of the Special Trustee for American Indians has submitted to OMB for renewal.

The American Indian Trust Fund Management Reform Act of 1994 (Pub. L. 103–412) makes provisions for the Office of the Special Trustee for American Indians to administer trust fund accounts for individuals and tribes. The collection of information is required to facilitate the processing of deposits, investments, and distribution of monies held in trust by the U.S. Government and administered by the Office of the Special Trustee for American Indians. The collection of information provides the information needed to establish procedures to: Deposit and retrieve funds from accounts, perform transactions such as cashing checks, reporting lost or stolen checks, stopping payment of checks, and general verification for account activities.

The OMB granted a three-year extension on March 12, 2007. The Office of the Special Trustee for American Indians is requesting to extend the information collection approval authority in order to enable the Department of the Interior to continue to comply with the American Indian Trust Fund Management Reform Act of 1994.

### II. Data

(1) *Title:* Trust Funds for Tribes and Individuals Indians, 25 CFR 115.

*OMB Control Number:* 1035–0004.

*Current Expiration Date:* March 31, 2010.

*Type of Review:* Information Collection Renewal.

*Affected Entities:* Individual Indian Monies (IIM) Account Holders.

*Estimated annual number of respondents:* 135,797.

*Frequency of response:* Four times a year.

(2) *Annual reporting and recordkeeping burden:*

*Average annual reporting burden per respondent:* 0.25 hours.

*Total annual reporting:* 135,797 hours.

(3) *Description of the need and use of the information:* This information collection is used to process deposits, investments, and distribution of monies held in trust by the Special Trustee for individual Indians in the administration of these accounts. The respondents submit information in order to gain or retain a benefit, namely, access to funds held in trust.

(4) As required under 5 CFR 1320.8(d), a **Federal Register** notice soliciting comments on the information collection was published on October 16, 2009 and an amended version correcting the date for the close of the comment period, on October 30, 2009 (74 FR 53292 and 74 FR 56209). No comments were received. This notice provides the public with an additional 30 days in which to comment on the proposed information collection activity.

### III. Request for Comments

The Department of the Interior invites comments on:

(a) Whether the collection of information is necessary for the proper performance of the functions of the agency, including whether the information will have practical utility;

(b) The accuracy of the agency's estimate of the burden of the collection and the validity of the methodology and assumptions used;

(c) Ways to enhance the quality, utility, and clarity of the information to be collected; and

(d) Ways to minimize the burden of the collection of information on those who are to respond, including through the use of appropriate automated, electronic, mechanical, or other collection techniques or other forms of information technology.

"Burden" means the total time, effort, or financial resources expended by persons to generate, maintain, retain, disclose or provide information to or for a Federal agency. This includes the time needed to review instructions; to develop, acquire, install and utilize technology and systems for the purpose of collecting, validating and verifying information, processing and maintaining information, and disclosing and providing information; to train personnel and to be able to respond to a collection of information, to search data sources, to complete and review the collection of information; and to transmit or otherwise disclose the information.

All written comments, with names and addresses, will be available for public inspection by appointment with

the point of contact given in the **ADDRESSES** section. The comments, with names and addresses, will be available for public view during regular business hours, excluding legal holidays. If you wish us to withhold your personal information, you must prominently state at the beginning of your comment what personal information you want us to withhold. We will honor your request to the extent allowable by law.

An agency may not conduct or sponsor, and a person is not required to respond to, a collection of information unless it displays a currently valid Office of Management and Budget control number.

Dated: March 3, 2010.

**Douglas A. Lords,**

*Deputy Special Trustee-Field Operations.*

[FR Doc. 2010–4930 Filed 3–8–10; 8:45 am]

**BILLING CODE 4310–2W–P**

## DEPARTMENT OF THE INTERIOR

### Bureau of Land Management

**[LLIDB01000–L54200000–FR0000–LVDID0480000, DK–G08–0003; IDI–35794]**

### Notice of Application for Recordable Disclaimer of Interest in Lands, Gem County, ID

**AGENCY:** Bureau of Land Management, Interior.

**ACTION:** Notice.

**SUMMARY:** An application has been filed with the Bureau of Land Management (BLM) by Cynthia L. Yee-Wallace, Attorney-at-Law, on behalf of Rick Zamzow for a Recordable Disclaimer of Interest from the United States for islands in Gem County, Idaho. This notice is intended to inform the public of the pending application.

**DATES:** Comments on this application should be received by *June 7, 2010.*

**ADDRESSES:** Comments must be filed with Peter J. Ditton, Acting State Director, Bureau of Land Management, Idaho State Office, 1387 S. Vinnell Way, Boise, ID 83709.

**FOR FURTHER INFORMATION CONTACT:** Laura Summers, Realty Specialist, at the above address or by phone at (208) 373–3866.

**SUPPLEMENTARY INFORMATION:** Pursuant to Section 315 of the Federal Land Policy and Management Act of 1976 (43 U.S.C. 1745), Cynthia L. Yee-Wallace, Attorney at Law, has filed an application on behalf of Rick Zamzow for a Disclaimer of Interest for a portion of two islands in the Payette River described as follows:

A parcel of land comprising 80.77 acres, more or less, in lots 3 and 4 of section 10, T. 6 N., R. 2 W., Boise Meridian, Gem County, Idaho, as shown on Record of Survey Instrument No. 239702, filed October 29, 2004, in the Gem County Recorder's Office, by William Hopkins, Idaho PLS No. 5721. Corrected by an Affidavit of Correction, Instrument No. 239983, filed in the Gem County Recorder's Office and recorded on November 15, 2004, more particularly described as follows:

Beginning at the corner of sections 2, 3, 10, and 11, T. 6 N., R. 2 W, thence; N. 89°55′47″ W., 2634.71 feet, thence; S. 21°07′20″ E., 400.00 feet, thence; S. 21°07′20″ E., 267.26 feet, thence; S. 21°07′20″ E., 427.59 feet, thence; S. 31°09′03″ W., 115.70 feet, thence; S. 42°37′28″ W., 84.83 feet, thence; S. 03°44′39″ E., 314.09 feet, thence; S. 04°55′12″ E., 242.00 feet, thence; S. 04°55′12″ E., 496.26 feet, thence;

S. 08°59′20″ E., 57.30 feet to AP36 and the True Point of Beginning, thence, along lines L39 and L36 to L18, as listed and corrected in the Line Table and Affidavit of Correction.N. 88°30′28″ W., 224.22 feet, thence; N. 81°27′25″ W., 476.10 feet, thence; N. 76°05′25″ W., 225.24 feet, thence; S. 87°45′54″ W., 212.53 feet, thence; S. 83°58′32″ W., 110.63 feet, thence; N. 75°33′21″ W., 113.85 feet, thence; N. 29°01′25″ W., 229.72 feet, thence; N. 00°27′40″ E., 271.75 feet, thence; S. 83°22′08″ E., 81.98 feet, thence; S. 11°35′30″ E., 165.86 feet, thence; N. 12°06′39″ E., 166.44 feet, thence; N. 34°47′01″ W., 265.19 feet, thence; N. 47°27′07″ W., 130.03 feet, thence; N. 59°59′46″ W., 162.59 feet, thence; N. 89°44′05″ W., 333.68 feet, thence; S. 80°49′15″ W., 201.32 feet, thence; S. 77°43′42″ W., 140.69 feet, thence; S. 62°20′41″ W., 156.56 feet, thence; ≤S. 46°36′56″ W., 145.46 feet, to AP17, thence; S. 00°13′13″ W., 1593.39 feet to the beginning of line L1 on the bank of the Payette River, thence, with meanders along the bank of the Payette River.

S. 72°27′35″ E., 190.22 feet, thence; N. 88°04′16″ E., 259.27 feet, thence; N. 64°26′43″ E., 360.85 feet, thence; N. 80°06′13″ E., 187.84 feet, thence; N. 72°51′41″ E., 95.33 feet, thence; N. 84°05′46″ E., 244.01 feet, thence; S. 80°03′02″ E., 107.51 feet, thence; S. 09°35′32″ W., 72.84 feet, thence; S. 47°30′04″ E., 60.94 feet, thence; S. 63°19′56″ E., 129.06 feet, thence; S. 79°19′28″ E., 185.42 feet, thence; S. 77°30′50″ E., 295.64 feet, thence; S. 72°09′52″ E., 106.81 feet, thence; S. 68°55′49″ E., 229.30 feet, thence; N. 84°20′17″ E., 291.77 feet, thence; N. 66°00′13″ E., 84.51 feet, thence; N. 57°26′47″ E., 83.28 feet to the end of L17 on the Payette River, thence; N. 09°01′08″ W., 950.95 feet to AP36 and the True Point of Beginning.

The above described islands in section ten are claimed by Mr. Zamzow on the basis that they grew up out of the bed of the river after statehood and therefore belong to the State of Idaho, if the Payette River is navigable, or belong to the upland owners, if it is non-navigable. Mr. Zamzow owns the property on the right, or north, bank of the Payette River and claims the portions of the two islands are included in the property he owns. The United States has no claim to or interest in the land described and issuance of a recordable disclaimer will remove a cloud of title to the land.

Comments, including names and street addresses of commentors, will be available for public review at the BLM Idaho State Office (*see* **ADDRESSES** above), during regular business hours, Monday through Friday, except Federal holidays. Before including your address, phone number, e-mail address, or other personal identifying information in your comment, you should be aware that your entire comment—including your personal identifying information—may be made publicly available at any time. While you can ask us in your comment to withhold your personal identifying information from public review, we cannot guarantee that we will be able to do so.

If no valid objection is received, a Disclaimer of Interest may be approved stating that the United States does not have a valid interest in these islands.

**Jerry L. Taylor,**

*Chief, Branch of Lands, Minerals and Water Rights, Resource Services Division.*

[FR Doc. 2010–4961 Filed 3–8–10; 8:45 am]

**BILLING CODE 4310–GG–P**

## DEPARTMENT OF THE INTERIOR

### Bureau of Land Management

**[LLNMP01000 L16100000 DO0000]**

### Notice of Intent To Prepare a Resource Management Plan Amendment to the Roswell Resource Management Plan for the Fort Stanton—Snowy River Cave National Conservation Area and Associated Environmental Assessment, New Mexico

**AGENCY:** Bureau of Land Management, Interior.

**ACTION:** Notice of Intent.

**SUMMARY:** In compliance with the National Environmental Policy Act of 1969 (NEPA), as amended, the Federal

Land Policy and Management Act of 1976 (FLPMA), as amended, and the Omnibus Public Land Management Act of 2009, the Bureau of Land Management (BLM) Roswell Field Office, Roswell, New Mexico, intends to prepare an amendment to the Roswell Resource Management Plan (RMP) with an associated Environmental Assessment (EA) to guide management of the Fort Stanton—Snowy River Cave National Conservation Area (NCA), and by this notice is announcing the beginning of the scoping process to solicit public comments and identify issues.

**DATES:** Comments on issues may be submitted in writing until April 8, 2010. The dates and locations of any scoping meetings will be announced at least 15 days in advance through local media and the BLM Web site at: *http://www.blm.gov/nm/st/en.html.* In order to be included in the Draft RMP amendment and EA, all comments must be received prior to the close of the scoping period or 15 days after the last public meeting, whichever is later. We will provide additional opportunities for public participation upon publication of the Draft RMP amendment and EA.

**ADDRESSES:** You may submit comments on issues and planning criteria related to the Fort Stanton—Snowy River Cave RMP amendment and EA by any of the following methods:

- *Web Site: http://www.blm.gov/nm/st/en.html;*
- *E-mail: nmrfo_comments@blm.gov;*
- *Fax:* 575–627–0276; and
- *Mail:* Roswell Field Office, 2909 W. 2nd St., Roswell, New Mexico 88201.

Documents pertinent to this proposal may be examined at the Roswell Field Office.

**FOR FURTHER INFORMATION CONTACT:** For further information and to have your name added to our mailing list, contact Howard Parman, Planning Team Leader, telephone 575–627–0212; address: Roswell Field Office, 2909 W. 2nd St., Roswell, New Mexico 88201; e-mail *howard_parman@blm.gov.*

**SUPPLEMENTARY INFORMATION:** The planning area is located in Lincoln County, New Mexico, and encompasses approximately 25,000 acres of public land. The purpose of the public scoping process is to determine relevant issues that will influence the scope of the environmental analysis, including alternatives, and guide the planning process. BLM personnel, Federal, State and local agencies, and other stakeholders have identified preliminary issues for the planning area. These issues include balancing protection of the Snowy River passages with access to Fort Stanton Cave, and coordinating with State and local agencies for more effective management of the NCA. Parts of Snowy River passages are unexplored, and may be within other governmental jurisdictions, specifically U.S. Forest Service lands (Lincoln National Forest) and lands owned by the Village of Ruidoso (Sierra Blanca Regional Airport).

Preliminary planning criteria include the following:

1. Management decisions set forth in the Fort Stanton—Snowy River Cave RMP amendment and EA will be in compliance with the Omnibus Public Land Management Act of 2009, FLPMA, and NEPA;
2. Decisions in the Fort Stanton—Snowy River Cave RMP amendment and EA will apply to the surface and subsurface estate managed by the BLM;
3. For program-specific guidance for decisions at the land use planning level, the process will follow the BLM's policies in the Land Use Planning Handbook, H–1601–1;
4. Public participation and collaboration will be an integral part of the planning process;
5. The BLM will strive to make decisions in the plan compatible with the existing plans and policies of adjacent local, State, and Federal agencies, and local American Indian tribes, as long as the decisions are consistent with the laws, regulations and policies governing the public lands;
6. The Fort Stanton—Snowy River Cave RMP amendment and EA will recognize valid existing rights;
7. The Fort Stanton—Snowy River Cave RMP amendment and EA will incorporate, where applicable, management decisions brought forward from existing planning documents;
8. The BLM staff will work cooperatively and collaboratively with cooperating agencies and all other interested groups, agencies, and individuals;
9. The BLM and cooperating agencies will jointly develop alternatives for resolution of resource management issues and management concerns;
10. Fire management strategies will be consistent with the Roswell Field Office Fire Management Plan (2004);
11. The BLM will consider public safety and welfare when addressing hazardous materials and fire management;
12. GIS and metadata information will meet Federal Geographic Data Committee standards, as required by Executive Order 12906, and all other applicable BLM data standards will be followed;
13. The planning process will provide for ongoing consultation with Tribes to identify strategies for protecting recognized traditional uses;
14. Planning and management direction will focus on the relative values of resources and not the combination of uses that will give the greatest economic return or economic output;
15. The BLM will consider the quantity and quality of non-commodity resource values;
16. The best available scientific information, research, and new technologies will be used in this planning effort;
17. Management decisions must allow for flexibility while supporting adaptive management principles; and
18. The Economic Profile System will be used as one source of demographic and economic data for the planning process, which will provide baseline data and contribute to estimates of existing and projected social and economic conditions.

You may submit comments on issues and planning criteria in writing to the BLM at any public scoping meeting, or you may submit them to the BLM using one of the methods listed in the **ADDRESSES** section above. To be most helpful, you should submit comments within 30 days after the last public meeting. Before including your address, phone number, e-mail address, or other personal identifying information in your comment, you should be aware that your entire comment—including your personal identifying information—may be made publicly available at any time. While you can ask us in your comment to withhold your personal identifying information from public review, we cannot guarantee that we will be able to do so. The minutes and list of attendees for each scoping meeting will be available to the public and open for 30 days after the meeting to any participant who wishes to clarify the views he or she expressed. The BLM will evaluate identified issues to be addressed in the plan, and will place them into one of three categories:

1. Issues to be resolved in the plan;
2. Issues to be resolved through policy or administrative action; and
3. Issues beyond the scope of this plan.

The BLM will provide an explanation in the Draft RMP amendment and EA as to why it placed an issue in category 2 or 3. The public is also encouraged to help identify any management questions and concerns that should be addressed in the plan. The BLM will work

collaboratively with interested parties to identify the management decisions that are best suited to local, regional, and national needs and concerns.

The BLM will use an interdisciplinary approach to develop the plan in order to consider the variety of resource issues and concerns identified. Specialists with expertise in the following disciplines will be involved in the planning process: Rangeland management, minerals and geology, outdoor recreation, archaeology, paleontology, wildlife, lands and realty, hydrology, soils, sociology, economics, and cave resources.

**Authority:** 40 CFR 1501.3, 40 CFR 1501.7, 43 CFR 1610.2.

**Linda S. C. Rundell,**

*New Mexico State Director.*

[FR Doc. 2010–4974 Filed 3–8–10; 8:45 am]

**BILLING CODE 4310–VA–P**

## DEPARTMENT OF THE INTERIOR

### Bureau of Land Management

**[LLORB06000.L17110000.PA0000.L .X.SS.021H0000; HAG–10–0143]**

### Notice of Public Meetings for the Steens Mountain Advisory Council

**AGENCY:** Bureau of Land Management, Interior.

**ACTION:** Notice of public meetings.

**SUMMARY:** In accordance with the Steens Mountain Cooperative Management and Protection Act of 2000, the Federal Land Policy and Management Act, and the Federal Advisory Committee Act of 1972, the U.S. Department of the Interior, Bureau of Land Management, Steens Mountain Advisory Council (SMAC) has scheduled the following tentative meeting dates:

**DATES:** April 12 and 13, 2010 and September 16 and 17, 2010 at the Bureau of Land Management (BLM), Burns District Office; November 18 and 19, 2010 in Bend, Oregon; and July 1 and 2, 2010 in Diamond, Oregon. All meeting sessions begin between 8 a.m. and 8:30 a.m. local time, and usually end no later than 4:30 p.m., local time. Some sessions may end as early as 12 noon, local time. Other sessions may include a full or partial-day field tour.

**ADDRESSES:** The Burns District Office is located at 28910 Highway 20 West, Hines, Oregon, 97738. The July meeting will be held at the Diamond School on Diamond Lane in Diamond, Oregon. The November meeting will be at the Phoenix Inn Suites, 300 NW Franklin Avenue, Bend, Oregon.

**FOR FURTHER INFORMATION CONTACT:** Christi Courtemanche, BLM, Burns District Office, 28910 Highway 20 West, Hines, Oregon 97738, (541) 573–4541 or *Christi_Courtemanche@blm.gov.*

**SUPPLEMENTARY INFORMATION:** The SMAC was appointed by the Secretary of the Interior on August 14, 2001, pursuant to the Steens Mountain Cooperative Management and Protection Act of 2000 (Pub. L. 106–399) and most recently re-chartered in January 2010. The SMAC's purpose is to provide representative counsel and advice to the BLM regarding new and unique approaches to management of the land within the bounds of the Steens Mountain Cooperative Management and Protection Area; cooperative programs and incentives for landscape management that meet human needs, maintain and improve the ecological and economic integrity of the area; and preparation and implementation of a management plan for the Steens Mountain Cooperative Management and Protection Area.

Topics to be discussed by the SMAC at these meetings include the Steens Mountain Comprehensive Recreation Plan; North Steens Ecosystem Restoration Project implementation; Science Strategy; South Steens Water Development Project Environmental Assessment; easements and acquisitions; In-holder Access Environmental Assessment; and categories of interest such as wildlife, special designated areas, partnerships/programs, cultural resources, education/interpretation, volunteer-based information, adaptive management and socioeconomics; and other matters that may reasonably come before the SMAC.

All meetings are open to the public in their entirety, including field tours or other arrangements outside of the general business setting. Those interested in attending a field tour must provide personal transportation. Information to be distributed to the SMAC is requested prior to the start of each meeting. Public comment is generally scheduled from 3 p.m. to 3:30 p.m., local time, both days of each meeting, but may be scheduled at alternate times depending on the meeting agenda and location. The amount of time scheduled for public presentations may be extended when the authorized representative considers it necessary to accommodate all who seek to be heard regarding matters on the agenda.

Dated: February 23, 2010.

**Kenny McDaniel,**

*District Manager.*

[FR Doc. 2010–4887 Filed 3–8–10; 8:45 am]

**BILLING CODE 4310–33–P**

## DEPARTMENT OF THE INTERIOR

### Bureau of Land Management

**[LLORV00000.L10200000.DD0000; HAG 10–0172]**

### Notice of Public Meeting, Southeast Oregon Resource Advisory Council

**AGENCY:** Bureau of Land Management, Interior.

**ACTION:** Notice of public meeting.

**SUMMARY:** Pursuant to the Federal Land Policy and Management Act and the Federal Advisory Committee Act, the U.S. Department of the Interior, Bureau of Land Management (BLM) Southeast Oregon Resource Advisory Council (SEORAC) will meet as indicated below:

**DATES:** The SEORAC meeting will begin 8 a.m. PDT on April 14, 2010.

**ADDRESSES:** The SEORAC will meet at the Burns District Office Conference Room, 28910 Highway 20 West, Hines, Oregon 97738.

**FOR FURTHER INFORMATION CONTACT:** Mark Wilkening, 100 Oregon Street, Vale, Oregon 97918, (541) 473–6218 or e-mail *mark_wilkening@blm.gov.*

**SUPPLEMENTARY INFORMATION:** The business meeting will take place on April 14, 2010 at the Burns District Office Conference Room, 28910 Highway 20 West, Hines, Oregon, from 8 a.m. to 4 p.m. The meeting may include such topics as Election of Officers, 2010 SEORAC Work Plan, BLM Energy Project Team Status Report, Updates on Lakeview and Southeast Oregon Resource Management Plans, BLM Vegetation EIS update, litigation updates, update on the BLM sagebrush/sage-grouse teams, Phase II Blue Mountain Forest Plan, Fremont-Winema Travel Management, and other matters as may reasonably come before the council. The public is welcome to attend all portions of the meeting and may make oral comments to the Council at 1 p.m. on April 14, 2010. Those who verbally address the SEORAC are asked to provide a *written* statement of their comments or presentation. Unless otherwise approved by the SEORAC Chair, the public comment period will last no longer than 15 minutes, and each speaker may address the SEORAC for a maximum of five minutes. If reasonable accommodation is required, please

contact the BLM Vale District Office at (541) 473–6213 as soon as possible.

Dated: March 1, 2010.

**Donald N. Gonzalez,**

*Vale District Manager.*

[FR Doc. 2010–4927 Filed 3–8–10; 8:45 am]

**BILLING CODE 4310–33–P**

## DEPARTMENT OF THE INTERIOR

## National Park Service

## National Register of Historic Places; Weekly Listing of Historic Properties

Pursuant to (36 CFR 60.13(b,c)) and (36 CFR 63.5), this notice, through publication of the information included herein, is to apprise the public as well as governmental agencies, associations and all other organizations and individuals interested in historic preservation, of the properties added to, or determined eligible for listing in, the National Register of Historic Places from December 14 to December 18, 2009.

For further information, please contact Edson Beall via: United States Postal Service mail, at the National Register of Historic Places, 2280, National Park Service, 1849 C St., NW., Washington, DC 20240; in person (by appointment), 1201 Eye St., NW., 8th floor, Washington, DC 20005; by fax, 202–371–2229; by phone, 202–354–2255; or by e-mail, *Edson_Beall@nps.gov.*

Dated: March 3, 2010.

**J. Paul Loether,**

*Chief, National Register of Historic Places/National Historic Landmarks Program.*

KEY: State, County, Property Name, Address/Boundary, City, Vicinity, Reference Number, Action, Date, Multiple Name

**IOWA**

**Dallas County**

Adel Public Square Historic District, About four blocks in downtown Adel centered on the Public Square, Adel, 09000106, LISTED, 12/18/09

**Polk County**

Mattes, Minnie Y. and Frank P., House, 1305 34th St., Des Moines, 09001090, LISTED, 12/16/09 (Architectural Legacy of Proudfoot & Bird in Iowa MPS)

**KANSAS**

**Bourbon County**

Fort Scott Downtown Historic District, Oak to 3rd St., Scott Ave. to National Ave., Fort Scott, 09001091, LISTED, 12/18/09

**Doniphan County**

Wathena Fruit Growers' Association Building, 104 3rd St., Wathena, 09001092, LISTED, 12/17/09

**MARYLAND**

**Anne Arundel County**

Quarter Place, 216 Marlboro Rd., Lothian, 09001094, LISTED, 12/18/09

Scott, Lula G., Community Center, 6243 Shady Side Rd., Shady Side, 09001093, LISTED, 12/18/09 (Rosenwald Schools of Anne Arundel County, Maryland MPS)

**MASSACHUSETTS**

**Middlesex County**

Crafts Street City Stable, 90 Crafts St., Newton, 09001095, LISTED, 12/18/09 (Newton MRA)

**Plymouth County**

Marshfield Hills HD, Bow, Highland, Main, Old Main, Pleasant and Prospect Sts., Glen, Marshfield, 09001096, LISTED, 12/18/09

Pinewoods Camp, 80 Cornish Field Rd., Plymouth, 09001151, LISTED, 12/16/09

**MICHIGAN**

**Wayne County**

Detroit Financial District, Bounded by Woodward & Jefferson and Lafayette & Washington Blvd., Detroit, 09001067, LISTED, 12/14/09

**MINNESOTA**

**Blue Earth County**

Mapleton Public Library, 104 1st. Ave. NE, Mapleton, 09001097, LISTED, 12/18/09

**MISSOURI**

**Jackson County**

Switzer School Buildings, generally bounded by Madison Ave. and Summit St., 18th to 20th Sts., Kansas City, 09001098, LISTED, 12/18/09

**St. Louis Independent City**

Marine Villa Neighborhood Historic District, Roughly bounded by S. Broadway, Chippewa, Cahokia, Kosciusko & Winnebago, St. Louis, 09001099, LISTED, 12/18/09 (South St. Louis Historic Working and Middle Class Streetcar Suburbs MPS)

**NEW JERSEY**

**Hunterdon County**

Case-Dvoor Farmstead, 111 Mine St., Raritan, 09001074, LISTED, 12/11/09

**Monmouth County**

Carlton, Theatre, The, 99 Monmouth St., Red Bank Borough, 09001100, LISTED, 12/18/09

**Somerset County**

Boudinot—Southard Farmstead, 135 N. Maple Ave., Bernards Township, 09001101, LISTED, 12/18/09

Six Mile Run Reformed Church, 3037 NJ 27, Franklin, 09001102, LISTED, 12/18/09

**NORTH CAROLINA**

**Catawba County**

Claremont High School Historic District (Boundary Increase), 505–753 N. Center St., 102–126 and 401 2nd Ave NE, 406–602 3rd Ave. NE, 12–118 5th Ave. NW, 212–258 5th Ave., Hickory, 09001103, LISTED, 12/18/09 (Hickory MRA)

**Wake County**

Meadowbrook Country Club, 8025 Country Club Dr., Garner vicinity, 09001106, LISTED, 12/16/09

**UTAH**

**San Juan County**

Neck and Cabin Spings Grazing Area, Grand View Point Rd. Moab, 09001108, LISTED, 12/18/09

**WYOMING**

**Albany County**

University Neighborhood Historic District, Roughly bounded by 6th St., 15th St., University Ave. and Custer St., Laramie, 09001109, LISTED, 12/18/09

**Big Horn County**

Carey Block, 602 Greybull Ave., Greybull, 09001110, LISTED, 12/18/09

[FR Doc. 2010–4989 Filed 3–8–10; 8:45 am]

**BILLING CODE 4312–51–P**

## DEPARTMENT OF THE INTERIOR

## Fish and Wildlife Service

**[FWS–R8–ES–2010–N012; 81420–1113–0000–F3]**

## Proposed Programmatic Safe Harbor Agreement for the Sacramento River Conservation Area Forum in Shasta, Tehama, Butte, Glenn, Colusa, Yolo, and Sutter Counties, CA

**AGENCY:** Fish and Wildlife Service, Interior.

**ACTION:** Notice of Availability; receipt of application; reopening of comment period.

**SUMMARY:** We, the U.S. Fish and Wildlife Service (Service), recently announced our receipt of an application for an Enhancement of Survival Permit from the Sacramento River Conservation Area Forum (applicant) under the Endangered Species Act of 1973, as amended (Act). We now reopen the comment period on this application and the associated proposed safe harbor agreement. If you have previously submitted comments, please do not resubmit them because we have already incorporated them in the public record and will fully consider them in our final decision.

**DATES:** To ensure consideration, please send your written comments by April 8, 2010.

**ADDRESSES:** Send comments to Ms. Kathy Brown, via U.S. mail at U.S. Fish and Wildlife Service, Sacramento Fish and Wildlife Office, 2800 Cottage Way, W–2605, Sacramento, California 95825; or via facsimile to (916) 414–6713.

**FOR FURTHER INFORMATION CONTACT:** Ms. Kathy Brown, Sacramento Fish and Wildlife Office (*see* **ADDRESSES**); telephone: (916) 414–6600; facsimile: (916) 414–6713.

**SUPPLEMENTARY INFORMATION:** On December 21, 2009, we published a **Federal Register** notice (74 FR 67897) announcing our receipt of an application for an Enhancement of Survival Permit from the Sacramento River Conservation Area Forum under the Act (16 U.S.C 1531 *et seq.*). The permit application includes a proposed Safe Harbor Agreement (Agreement) between the Applicant and us for the Federally threatened valley elderberry longhorn beetle (*Desmocerus californicus dimorphus*) and the Federally threatened giant garter snake (*Thamnophis gigas*). We took comments on the available documents until January 20, 2010. In response to several requests from local government agencies, non-governmental organizations, and the general public we are reopening the comment period for an additional 30 days. We will consider these public comments in our final version of the document.

For information on how to review available documents and submit comments or questions, along with background information on the safe harbor agreement process, see our December 21, 2009, notice (74 FR 67897).

We provide this notice under section 10(c) of the Act and our National Environmental Policy Act implementing regulations (40 CFR 1506.6).

Dated: March 2, 2010.

**Susan K. Moore,**

*Field Supervisor, Sacramento Fish and Wildlife Office, Sacramento, California.*

[FR Doc. 2010–4886 Filed 3–8–10; 8:45 am]

**BILLING CODE 4310–55–P**

## DEPARTMENT OF THE INTERIOR

### Bureau of Land Management

**[LLOR–936000–L14300000–ET0000; HAG–10–0019; OR–10898]**

### Notice of Proposed Withdrawal Extension and Opportunity for Public Meeting; Oregon

**AGENCY:** Bureau of Land Management, Interior.

**ACTION:** Notice.

**SUMMARY:** The United States Forest Service has filed an application with the Bureau of Land Management (BLM) that proposes to extend the duration of Public Land Order (PLO) No. 6856 for an additional 20-year term. PLO No. 6856 withdrew approximately 2,760.94 acres of National Forest System land from mining in order to protect the unique natural and ecological research values at the Abbott Creek Research Natural Area. The withdrawal created by PLO No. 6856 will expire on May 5, 2011, unless extended. This notice also gives an opportunity to comment on the proposed action and to request a public meeting.

**DATES:** Comments and requests for a public meeting must be received by June 7, 2010.

**ADDRESSES:** Comments and meeting requests should be sent to the Oregon/Washington State Director, BLM, P.O. Box 2965, Portland, Oregon 97208–2965.

**FOR FURTHER INFORMATION CONTACT:** David Krantz, Rogue River-Siskiyou National Forest, (541) 618–2037, or Charles R. Roy, BLM Oregon/Washington State Office, (503) 808–6189.

**SUPPLEMENTARY INFORMATION:** The United States Forest Service has filed an application requesting that the Secretary of the Interior extend PLO No. 6856 (56 FR 20550 (1991)), which withdrew certain lands in Douglas and Jackson Counties, Oregon from location and entry under the United States mining laws (30 U.S.C. ch. 2) for an additional 20-year term, subject to valid existing rights. The area described contains approximately 2,760.94 acres in Douglas and Jackson Counties. PLO No. 6856 is incorporated herein by reference.

The purpose of the proposed withdrawal extension is to continue the protection of the unique natural and ecological research values at the Abbott Creek Research Natural Area.

The use of a right-of-way, interagency agreement, or cooperative agreement would not provide adequate protection.

The Forest Service would not need to acquire water rights to fulfill the purpose of the requested withdrawal extension.

Records related to the application may be examined by contacting Charles R. Roy at the above address or phone number.

For a period of 90 days from the date of publication of this notice, all persons who wish to submit comments, suggestions, or objections in connection with the proposed withdrawal extension may present their views in writing to the BLM State Director at the address indicated above.

Comments, including names and street addresses of respondents, will be available for public review at the address indicated above during regular business hours.

Individual respondents may request confidentiality. Before including your address, phone number, e-mail address, or other personal identifying information in your comment, be advised that your entire comment—including your personal identifying information—may be made publicly available at any time. While you can ask us in your comment to withhold from public review your personal identifying information, we cannot guarantee that we will be able to do so. If you wish to withhold your name or address from public review or from disclosure under the Freedom of Information Act, you must state this prominently at the beginning of your comments. Such requests will be honored to the extent allowed by law. All submissions from organizations or businesses, and from individuals identifying themselves as representatives or officials of organization or businesses, will be made available for public inspection in their entirety.

Notice is hereby given that an opportunity for a public meeting is afforded in connection with the proposed withdrawal extension. All interested parties who desire a public meeting for the purpose of being heard on the proposed withdrawal extension must submit a written request to the BLM State Director at the address indicated above by June 7, 2010. Upon determination by the authorized officer that a public meeting will be held, a notice of the time and place will be published in the **Federal Register** and in at least one local newspaper not less than 30 days before the scheduled date of the meeting.

The application will be processed in accordance with the regulations set forth in 43 CFR part 2300.

**Authority:** 43 CFR 2310.3–1.

**Fred O'Ferrall,**

*Chief, Branch of Land, Mineral, and Energy Resources.*

[FR Doc. 2010–4963 Filed 3–8–10; 8:45 am]

**BILLING CODE 3410–11–P**

## DEPARTMENT OF THE INTERIOR

### Bureau of Land Management

**[LLOR–936000–L14300000–ET0000; HAG–10–0029; OR–10887]**

### Notice of Proposed Withdrawal Extension and Opportunity for Public Meeting; Oregon

**AGENCY:** Bureau of Land Management, Interior.

**ACTION:** Notice.

**SUMMARY:** The United States Forest Service has filed an application with the Bureau of Land Management (BLM) that proposes to extend the duration of Public Land Order (PLO) No. 6857 for an additional 20-year term. PLO No. 6857 withdrew approximately 540 acres of National Forest System land from mining in order to protect the scenic and recreational values and the investment of Federal funds at the Squaw Lakes Recreation Area. The withdrawal created by PLO No. 6857 will expire on May 5, 2011, unless extended. This notice also gives an opportunity to comment on the proposed action and to request a public meeting.

**DATE:** Comments and requests for a public meeting must be received by June 7, 2010.

**ADDRESS:** Comments and meeting requests should be sent to the Oregon/Washington State Director, BLM, P.O. Box 2965, Portland, Oregon 97208–2965.

**FOR FURTHER INFORMATION CONTACT:** David Krantz, Rogue River-Siskiyou National Forest, (541) 618–2037, or Charles R. Roy, BLM Oregon/Washington State Office, (503) 808–6189.

**SUPPLEMENTARY INFORMATION:** The United States Forest Service has filed an application requesting that the Secretary of the Interior extend PLO No. 6857 (56 FR 20551 (1991)), which withdrew certain lands in Jackson County, Oregon from location and entry under the United States mining laws (30 U.S.C. ch. 2) for an additional 20-year term, subject to valid existing rights. The area described contains approximately 540 acres in Jackson County. PLO No. 6857 is incorporated herein by reference.

The purpose of the proposed withdrawal extension is to continue the protection of the scenic and recreational values and the investment of Federal funds at the Squaw Lakes Recreation Area.

The use of a right-of-way, interagency agreement, or cooperative agreement would not provide adequate protection.

The Forest Service would not need to acquire water rights to fulfill the purpose of the requested withdrawal extension.

Records related to the application may be examined by contacting Charles R. Roy at the above address or phone number.

For a period of 90 days from the date of publication of this notice, all persons who wish to submit comments, suggestions, or objections in connection with the proposed withdrawal extension may present their views in writing to the BLM State Director at the address indicated above.

Comments, including names and street addresses of respondents, will be available for public review at the address indicated above during regular business hours.

Individual respondents may request confidentiality. Before including your address, phone number, e-mail address, or other personal identifying information in your comment, be advised that your entire comment—including your personal identifying information—may be made publicly available at any time. While you can ask us in your comment to withhold from public review your personal identifying information, we cannot guarantee that we will be able to do so. If you wish to withhold your name or address from public review or from disclosure under the Freedom of Information Act, you must state this prominently at the beginning of your comments. Such requests will be honored to the extent allowed by law. All submissions from organizations or businesses, and from individuals identifying themselves as representatives or officials of organization or businesses, will be made available for public inspection in their entirety.

Notice is hereby given that an opportunity for a public meeting is afforded in connection with the proposed withdrawal extension. All interested parties who desire a public meeting for the purpose of being heard on the proposed withdrawal extension must submit a written request to the BLM State Director at the address indicated above by June 7, 2010. Upon determination by the authorized officer that a public meeting will be held, a notice of the time and place will be published in the **Federal Register** and in at least one local newspaper no less than 30 days before the scheduled date of the meeting.

The application will be processed in accordance with the regulations set forth in 43 CFR part 2300.

**Authority:** 43 CFR 2310.3–1.

**Fred O'Ferrall,**

*Chief, Branch of Land, Mineral, and Energy Resources.*

[FR Doc. 2010–4960 Filed 3–8–10; 8:45 am]

**BILLING CODE 3410–11–P**

## DEPARTMENT OF THE INTERIOR

### Bureau of Land Management

**[LLOR–936000–L14300000–ET0000; HAG–09–0334; OROR–45928]**

### Notice of Proposed Withdrawal Extension, In-Part, and Opportunity for Public Meeting; Oregon

**AGENCY:** Bureau of Land Management, Interior.

**ACTION:** Notice.

**SUMMARY:** The United States Forest Service (USFS) has filed an application with the Bureau of Land Management (BLM) that proposes to extend the duration of Public Land Order (PLO) No. 6874, in-part, for an additional 20-year term as it affects 59.78 acres of land withdrawn for the Panelli Seed Orchard. The USFS has determined the remaining 40-acres of land withdrawn by PLO No. 6874 for the Quartz Evaluation Plantation is no longer needed, therefore the withdrawal on this portion will not be extended. The withdrawal created by PLO No. 6874 will expire on August 27, 2011, unless extended. This notice also gives the public an opportunity to comment on the proposed action and to request a public meeting.

**DATES:** Comments and requests for a public meeting must be received by June 7, 2010.

**ADDRESSES:** Comments and meeting requests should be sent to the Oregon/Washington State Director, BLM, P.O. Box 2965, Portland, Oregon 97208–2965.

**FOR FURTHER INFORMATION CONTACT:** Catherine Callaghan, Fremont-Winema National Forest, (541) 947–6326, or Charles R. Roy, BLM Oregon/Washington State Office, (503) 808–6189.

**SUPPLEMENTARY INFORMATION:** The USFS has filed an application requesting the Secretary of the Interior to extend PLO No. 6874, in part, as it pertains to the Panelli Seed Orchard (56 FR 11940 (1991)), for an additional 20-year term. PLO No. 6874 withdrew certain lands in Okanogan County, Oregon, from location and entry under the United States mining laws. Such application would be subject to valid existing rights, as it affects the following described land:

**Willamette Meridian**

*Fremont National Forest*

**Panelli Seed Orchard**

T. 37 S., R. 15 E.,
sec. 24, NE¼SE¼.

T. 37 S., R. 16 E.,
sec. 19, W½ lot 3.

The area described contains approximately 59.78 acres in Okanogan County.

That portion of PLO No. 6874 withdrawn to protect the Quartz Evaluation Plantation will expire on August 27, 2011, and is described as follows:

**Willamette Meridian**

*Fremont National Forest*

**Quartz Evaluation Plantation**

T. 37 S., R. 16 E.,
sec. 28, SW¼NE¼.

The area described contains 40 acres in Okanogan County.

The purpose of the proposed withdrawal extension is to continue the protection of the unique and important forest genetic resources and the expenditure of Federal funds at the Panelli Seed Orchard.

The use of a right-of-way, interagency agreement, or cooperative agreement would not provide adequate protection.

No water rights would be needed to fulfill the purpose of the requested withdrawal extension.

Records related to the application may be examined by contacting Charles R. Roy at the above BLM address or phone number.

For a period of 90 days from the date of publication of this notice, all persons who wish to submit comments, suggestions, or objections in connection with the proposed withdrawal extension may present their views in writing to the BLM State Director at the address indicated above.

Comments, including names and street addresses of respondents, will be available for public review at the address indicated above during regular business hours.

Individual respondents may request confidentiality. Before including your address, phone number, e-mail address, or other personal identifying information in your comment, be advised that your entire comment—including your personal identifying information—may be made publicly available at any time. While you can ask us in your comment to withhold from public review your personal identifying information, we cannot guarantee that we will be able to do so. If you wish to withhold your name or address from public review or from disclosure under the Freedom of Information Act, you must state this prominently at the beginning of your comments. Such requests will be honored to the extent allowed by law. All submissions from organizations or businesses, and from individuals identifying themselves as representatives or officials of organization or businesses, will be made available for public inspection in their entirety.

Notice is hereby given that an opportunity for a public meeting is afforded in connection with the proposed withdrawal extension. All interested parties who desire a public meeting for the purpose of being heard on the proposed withdrawal extension must submit a written request to the BLM State Director at the address indicated above by June 7, 2010. Upon determination by the authorized officer that a public meeting will be held, a notice of the time and place will be published in the **Federal Register** and in at least one local newspaper, no less than 30 days before the scheduled date of the meeting.

The application will be processed in accordance with the regulations set forth in 43 CFR part 2300.

(Authority: 43 CFR 2310.3–1)

**Fred O'Ferrall,**

*Chief, Branch of Lands and Mineral Resources.*

[FR Doc. 2010–4959 Filed 3–8–10; 8:45 am]

BILLING CODE 3410–11–P

## DEPARTMENT OF THE INTERIOR

## Bureau of Land Management

**[LLES002000.L1430000.ES0000; FLES 055584]**

## Notice of Realty Action: Recreation and Public Purposes Act Classification and Conveyance; Lake County, FL

**AGENCY:** Bureau of Land Management, Interior.

**ACTION:** Notice of Realty Action.

**SUMMARY:** The Bureau of Land Management (BLM) has examined and found suitable for lease or conveyance to the city of Tavares under the provisions of the Recreation and Public Purposes (R&PP) Act of 1926, as amended, approximately 0.068 acres of public land, located within city limits of Tavares, in Lake County, Florida. The city of Tavares proposes to use the land for additional boat trailer parking.

**DATES:** Interested parties may submit written comments regarding this proposed classification or lease/conveyance of public land until April 23, 2010.

**ADDRESSES:** Please submit your written comments to the Field Manager, Bureau of Land Management—Eastern States (BLM–ES), Jackson Field Office, 411 Briarwood Drive, Suite 404, Jackson, Mississippi 39206. Comments received in electronic form, such as e-mail or facsimile, will not be considered.

**FOR FURTHER INFORMATION CONTACT:** Vicky Craft, BLM–ES Jackson Field Office, at 601–977–5435, or at the address above.

**SUPPLEMENTARY INFORMATION:** In accordance with Section 7 of the Act of June 28, 1943, as amended (43 U.S.C. 315f), and Executive Order 6964, the following described public land in Lake County, Florida, has been examined and found suitable for classification for lease or conveyance under the provisions of the R&PP Act, as amended, (43 U.S.C. 869 *et seq.*) and, accordingly, opened for only that purpose.

**Tallahassee Meridian**

T. 19 S., R.26 E.,
Sec. 29, Lot H, Block 2.

The area described contains 2,945.3 sq. ft. or 0.068 acres, more or less, in Lake County.

The city of Tavares owns approximately 6.66 acres on the shoreline of Lake Dora in the same section. The city also owns portions of the lake bottom of Lake Dora adjacent to the 6.66 acres of uplands. The proposed site for conveyance is adjacent to the already established Wooton Park. The park is currently utilized for recreation by city and Lake County residents. Facilities available include a playground, tennis courts, restrooms, boat ramp, walking trail, picnic area, limited boat docking, and parking. The city desires to expand and improve its current public amenities to include additional docking facilities for boats and seaplanes by incorporating the land into the existing park and converting it into boat trailer parking spaces.

Conveyance of the land to the city of Tavares is consistent with the BLM Florida Resource Management Plan, dated June 21, 1995, and would be in the public interest. Additional detailed information pertaining to this application, including a plan of development and a map depicting the public land, as well as environmental documents, are available for review at the BLM–ES Jackson Field Office.

The city of Tavares has not applied for more than the 6,400-acre limitation for recreation uses in a year and has submitted a statement of compliance with the regulations at 43 CFR 2741.4(b). The city of Tavares proposes to use the land for boat trailer parking spaces.

The city of Tavares has applied for a patent to the land under the R&PP Act of 1926. The patent or lease, if issued, would be subject to the following terms, conditions and reservations to the United States:

1. Provisions of the R&PP Act of 1926, as amended, and all applicable regulations of the Secretary of the Interior, including, but not limited to, those terms required by 43 CFR 2741.9;
2. Valid existing rights;
3. A reservation of all minerals by the United States, together with the right to prospect, mine and remove the minerals;
4. Terms and conditions identified through the site specific environmental analysis;
5. Any other rights or reservations that the authorized officer deems appropriate to ensure public access and proper management of Federal land and interest therein; and
6. An appropriate indemnification clause protecting the United States from claims arising out of the lessee's/patentee's use, occupancy, or operations on the leased/patented lands.

Upon publication of this notice in the **Federal Register,** the land described above will be segregated from all other forms of disposal or appropriation under the public land laws, including the general mining laws, except for lease or conveyance under the R&PP Act and leasing under the mineral leasing laws.

*Classification Comments:* Interested persons may submit comments involving the suitability of the land for boat trailer parking spaces. Comments on the classification are restricted to whether the land is physically suited for the proposal, whether the use will maximize the future use or uses of the land, whether the use is consistent with local planning and zoning, or if the use is consistent with state and Federal programs.

*Application Comments:* Interested persons may submit comments regarding the specific use proposed in the application and plan of development and the management plan, whether the BLM–ES followed proper administrative procedures in reaching the decision to lease and later convey under the R&PP Act, or any other factor not directly related to the suitability of the land for R&PP use.

Before including your address, phone number, e-mail address, or other personal identifying information in your comment, you should be aware that your entire comment—including your personal identifying information—may be made publicly available at any time. While you can ask in your comment to withhold your personal identifying information from public review, we cannot guarantee that we will be able to do so.

Any adverse comments will be reviewed by the BLM–ES State Director. In the absence of any adverse comments, the classification of the land described in the notice will become effective May 10, 2010. The land will not be conveyed until after the classification becomes effective.

**Authority:** 43 CFR 2741.5.

**Bruce Dawson,**

*Field Manager.*

[FR Doc. 2010–4975 Filed 3–8–10; 8:45 am]

**BILLING CODE 4310–GJ–P**

## DEPARTMENT OF THE INTERIOR

### Bureau of Land Management

**[LLCAN00000.L18200000.XZ0000]**

### Notice of Resource Advisory Council Vacancies

**AGENCY:** Bureau of Land Management, Interior.

**ACTION:** Notice.

**SUMMARY:** Pursuant to authorities in the Federal Advisory Committee Act (FACA) and the Federal Land Policy and Management Act (FLPMA), the Bureau of Land Management (BLM) is seeking nominations to fill two vacant seats on the Northwest California Resource Advisory Council. The persons selected to fill the vacancies will complete unexpired terms ending in September 2010 and September 2011. The appointees will be eligible to compete for the full three-year terms when the current terms expire.

**SUPPLEMENTARY INFORMATION:** The council vacancies are in membership category one, which includes persons who hold Federal grazing permits in northwest California, or represent transportation and rights of way interests, the commercial timber industry, energy and mineral development interests, or recreational interests including off-highway vehicle users, commercial recreation, or developed recreation interests. The appointments will be made by the Secretary of the Interior pursuant to FACA (5 U.S.C. Appendix 2) and FLMPMA (43 U.S.C. 1701 *et seq.*) as are all BLM Resource Advisory Council appointments. The persons selected must have knowledge or experience in the interest area specified, and must have knowledge of the geographic area under the council's purview (Northwest California). Qualified applicants must have demonstrated a commitment to collaborate with varied interests to solve a broad spectrum of natural resource issues.

Nomination forms are available by contacting BLM Public Affairs Officer Joseph J. Fontana, 2950 Riverside Drive, Susanville, California 96130; by telephone at (530) 252–5332; or e-mail, *jfontana@ca.blm.gov.* Forms can also be downloaded from the following BLM California Web site: *http://www.blm.gov/ca/st/en/info/rac/nwrac.html.* Nominations must be returned to: Bureau of Land Management, 2950 Riverside Drive, Susanville, California 96130, Attention: Public Affairs Officer, no later than April 8, 2010. Individuals can nominate themselves, or interest groups can submit nominations. Nominations must include letters of support from the interest groups the nominee will represent.

The Obama Administration prohibits individuals who are currently federally registered lobbyists to serve on all FACA and non-FACA boards, committees or councils.

*For Additional Information:* Contact BLM Northern California District Manager Nancy Haug, (530) 221–1743, or Public Affairs Officer Joseph J. Fontana at the above phone or e-mail address.

**Authority:** 43 CFR subpart 1784.

**Joseph J. Fontana,**

*Public Affairs Officer.*

[FR Doc. 2010–4966 Filed 3–8–10; 8:45 am]

**BILLING CODE 4310–40–P**

## INTERNATIONAL TRADE COMMISSION

**[Investigation No. 1205–7]**

### Proposed Modifications to the Harmonized Tariff Schedule of the United States

**AGENCY:** United States International Trade Commission.

**ACTION:** Notice of institution of investigation and request for public comment.

**SUMMARY:** On February 26, 2010, the Commission instituted Investigation No. 1205–7, Proposed Modifications to the Harmonized Tariff Schedule of the United States, pursuant to section 1205 of the Omnibus Trade and Competitiveness Act of 1988 (the 1988 Act). Section 1205 directs the Commission to keep the Harmonized Tariff Schedule of the United States (HTS) under continuous review and to recommend to the President modifications thereto, (1) when amendments to the international Convention on the Harmonized Commodity Description and Coding System (Harmonized System), and the Protocol thereto, are recommended by

the World Customs Organization (WCO) (formerly known as the Customs Cooperation Council) for adoption; and/or (2) as other circumstances warrant. The Commission's report will set forth the proposed changes to the HTS that would be needed to maintain conformity between the HTS and the international Harmonized System. The report will also include appropriate explanatory information on the proposed changes. In accordance with section 1206 of the 1988 Act, the President may proclaim the tariff modifications recommended by the Commission, following Congressional layover and consultation.

**DATES:** *April 9, 2010:* Publication of preliminary report on the USITC Web site.

*May 21, 2010:* Deadline for public comments on preliminary report.

*June 25, 2010:* Submission of final report to the President.

**ADDRESSES:** All Commission offices are located in the United States International Trade Commission Building, 500 E Street, SW., Washington, DC. All written submissions should be addressed to the Secretary, United States International Trade Commission, 500 E Street, SW., Washington, DC 20436. The public record for this collection of proposals may be viewed on the Commission's electronic docket (EDIS) at *http://edis.usitc.gov.*

**FOR FURTHER INFORMATION CONTACT:** David Beck, Director, Office of Tariff Affairs and Trade Agreements (202–205–2603, fax 202–205–2616, *david.beck@usitc.gov*). The media should contact Margaret O'Laughlin, Office of External Affairs (202–205–1819, *margaret.olaughlin@usitc.gov*). Hearing impaired individuals may obtain information on this matter by contacting the Commission's TDD terminal at 202–205–1810. General information concerning the Commission may also be obtained by accessing its Internet Web site at *http://www.usitc.gov*. Persons with mobility impairments who will need special assistance in gaining access to the Commission should contact the Office of the Secretary at 202–205–2000.

*Background:* Section 1205(a) of the Omnibus Trade and Competitiveness Act of 1988 (the 1988 Act) (19 U.S.C. 3005(a)) provides that the Commission shall keep the HTS under continuous review and periodically recommend to the President such modifications in the HTS as the Commission considers necessary or appropriate to accomplish five general objectives. Among these stated objectives, section 1205(a)(1) of the 1988 Act directs the Commission to conform the Harmonized Tariff Schedule with amendments made to the Harmonized System Convention, of which the United States is a signatory. Section 1205(a)(2) directs the Commission to promote the uniform application of the Harmonized System Convention and particularly the Protocol thereto, which contains the Harmonized System nomenclature structure and accompanying legal notes. Subsections (b)–(d) of section 1205 set out procedures to be utilized in formulating recommendations and the requirements that the Commission must observe with respect to the HTS modifications it may recommend.

The proposed changes included in this investigation are set out in a Recommendation promulgated by the World Customs Organization (WCO) on June 26, 2009, in order to update and clarify the international Harmonized System nomenclature. The Recommendation—the fourth in a series—is part of the WCO's long-term program to review periodically the HS nomenclature structure. In accordance with Article 16 of the Harmonized System Convention, the WCO has recommended the adoption of certain modifications to the Harmonized System nomenclature, which are scheduled to become effective on January 1, 2012. The WCO Recommendation of 26 June 2009 can be viewed on the Commission's Web site: *http://www.usitc.gov/tariff_affairs/modifications_hts.htm.*

The Harmonized System nomenclature provides a uniform structural basis for the customs tariffs and statistical nomenclatures of all major trading countries of the world, including the United States. The Harmonized System comprises the broadest principles of classification and levels of categories in the HTS, that is, the General Rules of Interpretation, Section and Chapter titles, Section and Chapter legal notes, and heading and subheading texts to the 6-digit level of detail. Additional U.S. notes, further subdivisions (8-digit subheadings and 10-digit statistical annotations) and statistical notes, as well as the entirety of chapters 98 and 99 and several appendixes, are national legal and statistical detail added for the administration of the U.S. tariff and statistical programs, and are not part of the international Harmonized System.

An up-to-date copy of the HTS, which incorporates the international Harmonized System in its overall structure, can be found on the Commission's Web site (*http://www.usitc.gov/tata/hts/bychapter/index.htm*). Hard copies and electronic copies of CD can be found at many of the 1,400 Federal Depository Libraries located throughout the United States and its territories; further information about these locations can be found at *http://www.gpoaccess.gov/fdlp.html* or by contacting GPO Access at the Government Printing Office, telephone 866–512–1800.

The Commission will prepare and make available a preliminary report and a final report. The preliminary report will be forwarded to the President via the United States Trade Representative on or about April 9, 2010. It will also be made available for public inspection (with the exception of any confidential business information) through the Commission's electronic docket (EDIS) and posted on the USITC Web site (*http://www.usitc.gov*).

The preliminary report will include proposed HTS modifications to conform the HTS to the WCO Recommendation of 26 June 2009. The public is invited to submit any comments until May 21, 2010. To assist the public in understanding the proposed changes and in developing comments, the Commission will include, in the preliminary and the final reports, a non-authoritative cross-reference table linking the proposed tariff codes to corresponding current tariff codes. Persons using the successive versions of this table should be aware that the cross-references shown are subject to change during the course of preparing for implementation of the January 2102 amendments to the HTS. U.S. Customs and Border Protection has domestic legal authority for tariff classification and may provide information, both during the course of the investigation and after the Commission's final report is submitted, that indicates different or additional tariff classifications of some goods. Moreover, the WCO Secretariat will eventually issue its own advisory cross-reference table between the 2007 HS and the 2012 HS. If necessary, the Commission's report will provide an explanation for any differences between the WCO's and the Commission's cross-reference tables; such differences would typically result from differences between WCO decisions and established U.S. customs classification of goods.

The Commission's final report, incorporating any public comments received, will be sent to the President (through USTR) on or about June 25, 2010. It will also be made available for public inspection (with the exception of any confidential business information) through the Commission's electronic docket (EDIS) and posted on the USITC Web site (*http://www.usitc.gov*).

Following Congressional layover and consultation, the President may proclaim the tariff modifications recommended, effective not before the 30th day after the date on which the text of the proclamation is published in the **Federal Register.**

*Written Submissions:* No public hearing is planned, but interested parties are invited to submit written comments, which should be addressed to the Secretary and received no later than May 21, 2010. Submissions should be marked to refer to "Investigation No. 1205–7". All written submissions must conform with the provisions of section 201.8 of the Commission's *Rules of Practice and Procedure* (19 CFR 201.8). Section 201.8 requires that a signed original (or a copy so designated) and fourteen (14) copies of each document be filed. In the event that confidential treatment of a document is requested, at least four (4) additional copies must be filed, in which the confidential information must be deleted (see the following paragraph for further information regarding confidential business information). The Commission's rules authorize filing submissions with the Secretary by facsimile or electronic means only to the extent permitted by section 201.8 of the rules (see Handbook for Electronic Filing Procedures, *http://www.usitc.gov/docket_services/documents/handbook_on_electronic_filing.pdf.* Persons with questions regarding electronic filing should contact the Secretary (202–205–2000).

Any submissions that contain confidential business information must also conform with the requirements of section 201.6 of the *Commission's Rules of Practice and Procedur*e (19 CFR 201.6). Section 201.6 of the rules requires that the cover of the document and the individual pages be clearly marked as to whether they are the "confidential" or "non-confidential" version, and that the confidential business information be clearly identified by means of brackets. All written submissions, except for confidential business information, will be made available for inspection by the public. Any confidential business information that might be received in the comments may be made available to Customs, Census, or the President during the examination of these proposals. The Commission will not otherwise publish or release any confidential business information received, nor release it to other government agencies or other persons.

Issued: March 4, 2010.

By order of the Commission.

**Marilyn R. Abbott,**

*Secretary to the Commission.*

[FR Doc. 2010–4969 Filed 3–8–10; 8:45 am]

**BILLING CODE 7020–02–P**

## DEPARTMENT OF LABOR

### Bureau of Labor Statistics

### Proposed Collection, Comment Request

**ACTION:** Notice.

**SUMMARY:** The Department of Labor, as part of its continuing effort to reduce paperwork and respondent burden, conducts a pre-clearance consultation program to provide the general public and Federal agencies with an opportunity to comment on proposed and/or continuing collections of information in accordance with the Paperwork Reduction Act of 1995 (PRA95) [44 U.S.C. 3506(c)(2)(A)]. This program helps to ensure that requested data can be provided in the desired format, reporting burden (time and financial resources) is minimized, collection instruments are clearly understood, and the impact of collection requirements on respondents can be properly assessed. The Bureau of Labor Statistics (BLS) is soliciting comments concerning the proposed extension of the "Report on Occupational Employment and Wages." A copy of the proposed information collection request (ICR) can be obtained by contacting the individual listed below in the Addresses section of this notice.

**DATES:** Written comments must be submitted to the office listed in the Addresses section of this notice on or before May 10, 2010.

**ADDRESSES:** Send comments to Carol Rowan, BLS Clearance Officer, Division of Management Systems, Bureau of Labor Statistics, Room 4080, 2 Massachusetts Avenue, NE., Washington, DC 20212. Written comments also may be transmitted by fax to 202–691–5111 (this is not a toll free number).

**FOR FURTHER INFORMATION CONTACT:** Carol Rowan, BLS Clearance Officer, at 202–691–7628 (this is not a toll free number). (*See* **ADDRESSES** section.)

**SUPPLEMENTARY INFORMATION:**

### I. Background

The Occupational Employment Statistics (OES) survey is a Federal/State establishment survey of wage and salary workers designed to produce data on current occupational employment and wages. OES survey data assist in the development of employment and training programs established by the 1998 Workforce Investment Act (WIA) and the Perkins Vocational Education Act of 1998.

The OES program operates a periodic mail survey of a sample of non-farm establishments conducted by all fifty States, the District of Columbia, Guam, Puerto Rico, and the U.S. Virgin Islands. Over three-year periods, data on occupational employment and wages are collected by industry at the four- and five-digit North American Industry Classification System (NAICS) levels. The Department of Labor uses OES data in the administration of the Foreign Labor Certification process under the Immigration Act of 1990.

### II. Current Action

Office of Management and Budget clearance is being sought for the Occupational Employment Statistics (OES) program. Occupational employment data obtained by the OES survey are used to develop information regarding current and projected employment needs and job opportunities. These data assist in the development of State vocational education plans. OES wage data provide a significant source of information to support a number of different Federal, State, and local efforts.

As part of an ongoing effort to reduce respondent burden, OES has several electronic submission options which are available to respondents. Respondents have the ability to submit data by e-mail, or fillable online forms. In many cases, a respondent can submit existing payroll records and would not need to submit a survey form.

### III. Desired Focus of Comments

The Bureau of Labor Statistics is particularly interested in comments that:

- Evaluate whether the proposed collection of information is necessary for the proper performance of the functions of the agency, including whether the information will have practical utility.
- Evaluate the accuracy of the agency's estimate of the burden of the proposed collection of information, including the validity of the methodology and assumptions used.
- Enhance the quality, utility, and clarity of the information to be collected.
- Minimize the burden of the collection of information on those who are to respond, including through the use of appropriate automated, electronic, mechanical, or other

technological collection techniques or other forms of information technology, *e.g.,* permitting electronic submissions of responses.

*Type of Review:* Extension of a currently approved collection.

*Agency:* Bureau of Labor Statistics.

*Title:* Report on Occupational Employment and Wages.

*OMB Number:* 1220–0042.

*Affected Public:* Business or other for-profit, Not-for-profit institutions, Federal Government, State, Local, or Tribal Government.

*Total Respondents:* 315,900.

*Frequency:* Semi-annually.

*Total Responses:* 315,900.

*Average Time per Response:* 45 minutes.

*Estimated Total Burden Hours:* 236,925.

*Total Burden Cost (capital/startup):* $00.00.

*Total Burden Cost (operating/maintenance):* $00.00.

Comments submitted in response to this notice will be summarized and/or included in the request for Office of Management and Budget approval of the information collection request; they also will become a matter of public record.

Signed at Washington, DC, this 26th day of February, 2010.

**Kimberley D. Hill,**

*Acting Chief, Division of Management Systems, Bureau of Labor Statistics.*

[FR Doc. 2010–4950 Filed 3–8–10; 8:45 am]

**BILLING CODE 4510–24–P**

## DEPARTMENT OF LABOR

### Veterans' Employment and Training Service

### Proposed Information Collection Request Submitted for Public Comment and Recommendations Eligibility Data Form: Uniformed Services Employment and Reemployment Rights Act and Veteran's Preference (USERRA/VP)

**AGENCY:** Veterans' Employment and Training Service (VETS), Labor.

**ACTION:** Notice.

**SUMMARY:** The Department of Labor, as part of its continuing effort to reduce paperwork and respondent burden, conducts a pre-clearance consultation program to provide the general public and Federal agencies with an opportunity to comment on proposed and/or continuing collections of information in accordance with The Paperwork Reduction Act of 1995 (PRA95) [44 U.S.C. 3506 C (2)(A)]. This program helps to ensure that requested data can be provided in the desired format, reporting burden (time and financial resources) is minimized, collection instruments are clearly understood, and the impact of collection requirements on respondents can be properly assessed.

Currently the Veterans' Employment and Training Service (VETS) is soliciting comments concerning the proposed information collection request for the VETS USERRA/VP Form 1010.

**DATES:** Comments are to be submitted by May 10, 2010.

**ADDRESSES:** Follow the instructions for submitting comments.

- *E-mail: 1010–FRN–20010–VETS@dol.gov.* Include "VETS–1010 Form" in the subject line of the message.
- *Fax:* (202) 693–4755 (for comments of 10 pages or less).
- *Mail:* Robert Wilson, Deputy Director, Division of Investigation and Compliance, VETS, U.S. Department of Labor, Room S–1316, 200 Constitution Avenue, NW., Washington, DC 20210.
- Receipt of submissions, whether by U.S. Mail, e-mail or FAX transmittal, will not be acknowledged; however, the sender may request confirmation that a submission has been received, by telephoning VETS at (202) 693–4719(VOICE) (this is not a toll-free number) or (202) 693–4753 (TTY/TDD).

All comments received, including any personal information provided, will be available for public inspection during normal business hours at the above address. People needing assistance to review comments will be provided with appropriate aids such as readers or print magnifiers.

**FOR FURTHER INFORMATION CONTACT:** Robert Wilson, Deputy Director, Division of Investigation and Compliance, VETS, at the U.S. Department of Labor, Room S–1316, 200 Constitution Avenue, NW., Washington, DC 20210, or by e-mail at: *1010–FRN–20010–VETS@dol.gov.*

*Addresses:* Comments are to be submitted to the Veterans' Employment and Training Service, U.S. Department of Labor, ATTN: VETS–1010 Form, Room S–1316, 200 Constitution Ave., NW., Washington, DC 20210, telephone (202) 693–4719. Written comments limited to 10 pages or fewer may also be transmitted by facsimile to (202) 693–4755. Receipt of submissions, whether by U.S. mail, e-mail or FAX transmittal, will not be acknowledged; however, the sender may request confirmation that a submission has been received, by telephoning VETS at (202) 693–4719.

**SUPPLEMENTARY INFORMATION:**

**I. Background**

The VETS/USERRA/VP Form 1010 (VETS–1010 Form) is used to file complaints with the Department of Labor's Veterans' Employment and Training Service (VETS) under either the Uniformed Services Employment and Reemployment Rights Act (USERRA) or laws/regulations related to Veterans' Preference (VP) in Federal employment.

On October 13, 1994, the Uniformed Services Employment and Reemployment Rights Act (USERRA), Public Law 103–353, 108 Stat. 3150 was signed into law. Contained in Title 38, U.S.C., Sections 4301–4335, USERRA is the replacement for the Veterans' Reemployment Rights (VRR) law. The purpose of USERRA laws and regulations for this information collection requirement include: to protect and facilitate the prompt reemployment of members of the uniformed services (to include National Guard and Reserves); to minimize disruption to the lives of persons who perform service in the uniformed services and their employers; and to encourage individuals to participate in non-career uniformed service. Also, to prohibit discrimination in employment and acts of reprisal against persons because of their obligations in the uniformed services, prior service, intention to join the uniformed services, filing of a USERRA claim, seeking assistance concerning an alleged violation, testifying in a proceeding, or otherwise assisting in an investigation.

The Veterans Employment Opportunities Act (VEOA) of 1998, Public Law 105–339, 112 Stat. 3182, contained in Title 5 U.S.C. 3330a–3330(b), authorizes the Secretary of Labor to provide assistance to preference eligible individuals who believe their rights under the veterans preference laws have been violated. The regulations for this information collection requirement include: to provide preference for certain Veterans (preference eligibles) over others in Federal hiring from competitive lists of applicants; to allow access and open up Federal job opportunities to Veterans that might otherwise be closed to the public; to provide preference eligibles with preference over others in retention during reductions in force in Federal agencies.

Two new questions are included in the VETS–1010 Form, but have no significant impact on the burden hours needed to complete the form. The Veterans' Benefits Improvement Act of 2008 requires VETS to include in its USERRA Annual Report to Congress the

number of cases that involve a person who has a service-connected disability and the number of cases that involve persons with different occupations or persons seeking different occupations, as designated by the Standard Occupational Classification System. To collect the required information, Section I: Claimant Information and Section III: Employer Information on the VETS–1010 Form were modified.

Section I: Claimant Information, question #7 asks: "Do you have a military service-connected disability?" The current question #7 becomes question #8 on the revised form.

Section III: Employer Information, question #18 asks for "Title of the Position or Occupation that is related to your claim (the job that you either now hold, or used to hold, or applied for, with this employer): _____"

Finally, a centralized mailing address is added to the VETS–1010 Form: Veterans' Employment and Training Service, U.S. Department of Labor, *Attention: Form 1010,* 61 Forsyth Street, SW., Room 6T85, Atlanta, Georgia 30303. VETS is implementing centralized receipt of claims to enable the agency to better track USERRA and VP claims, thus providing improved service to our Veteran claimants. VETS staff in Atlanta will record incoming forms and electronically direct the claim to the appropriate VETS' regional office and investigator.

**II. Desired Focus of Comments**

Currently VETS is soliciting comments concerning the proposed information collection request for the VETS–1010 Form. The Department of Labor is particularly interested in comments which:

- Evaluate whether the proposed collection of information is necessary for the proper performance of the functions of the agency, including whether the information will have practical utility;
- Evaluate the accuracy of the agency's estimate of the burden of the proposed collection of information, including the validity of the methodology and assumptions used;
- Enhance the quality, utility, and clarity of the information to be collected; and
- Minimize the burden of the collection of information on those who are to respond, including through the use of appropriate automated, electronic, mechanical, or other technological collection techniques or other forms of information technology, e.g., permitting electronic submissions of responses.

**III. Current Actions**

This notice requests an extension of the current Office of Management and Budget approval of the paperwork requirements for VETS–1010 Form.

*Type of Review:* Extension.

*Agency:* Veterans' Employment and Training Service.

*Title:* VETS/USERRA/VP (VETS–1010 Form.)

*OMB Number:* 1293–0002.

*Affected Public:* Individuals or households.

*Total Respondents:* Approximately 2,500.

*Average Time per Response:* 30 minutes.

*Total Burden Hours:* 1,250 hours.

*Total Annualized Capital/Startup costs:* $0.

*Total Initial Annual Costs:* $0.

Comments submitted in response to this notice will be summarized and included in the request for the Office of Management and Budget approval of the information collection request. Comments will become a matter of public record.

Dated: March 4, 2010.

**John M. McWilliam,**

*Deputy Assistant Secretary for Operations and Management, Veterans' Employment and Training Service Department of Labor.*

[FR Doc. 2010–4968 Filed 3–8–10; 8:45 am]

BILLING CODE 4510–79–P

## DEPARTMENT OF LABOR

### Employment and Training Administration

**[TA–W–73,157]**

### FCI USA, LLC Including On-Site Leased Workers From Manpower, Inc.; Mount Union, PA; Amended Certification Regarding Eligibility To Apply for Worker Adjustment Assistance

In accordance with Section 223 of the Trade Act of 1974, as amended ("Act"), 19 U.S.C. 2273, the Department of Labor issued a Certification of Eligibility to Apply for Worker Adjustment Assistance on January 22, 2010, applicable to workers of FCI USA, LLC, including on-site leased workers from Manpower, Inc., Mount Union, Pennsylvania. The notice will be published soon in the **Federal Register.**

At the request of the State Agency, the Department reviewed the certification for workers of the subject firm. The workers are engaged in activities related to the production of electrical components for various communications devices, personal computers, and auto dashboards.

The review shows that on February 21, 2008, a certification of eligibility to apply for adjustment assistance was issued for all workers of FCI USA, Inc., Mount Union, Pennsylvania, separated from employment on or after September 28, 2007 through February 21, 2010. The notice was published in the **Federal Register** on March 7, 2008 (73 FR 12466).

In order to avoid an overlap in worker group coverage, the Department is amending the December 22, 2008 impact date established for TA–W–73,157, to read February 22, 2010.

The amended notice applicable to TA–W–73,157 is hereby issued as follows:

All workers of FCI USA, LLC, including on-site leased workers from Manpower, Inc., Mount Union, Pennsylvania, who became totally or partially separated from employment on or after February 22, 2010, through January 22, 2012, and all workers in the group threatened with total or partial separation from employment on date of certification through two years from the date of certification, are eligible to apply for adjustment assistance under Chapter 2 of Title II of the Trade Act of 1974, as amended.

Signed in Washington, DC, this 3rd day of March 2010.

**Elliott S. Kushner,**

*Certifying Officer, Division of Trade Adjustment Assistance.*

[FR Doc. 2010–4904 Filed 3–8–10; 8:45 am]

BILLING CODE 4510–FN–P

## MILLENNIUM CHALLENGE CORPORATION

**[MCC FR 10–03]**

### Notice of the March 24, 2010 Millennium Challenge Corporation Board of Directors Meeting; Sunshine Act Meeting

**AGENCY:** Millennium Challenge Corporation.

**TIME AND DATE:** 10 a.m. to 12 p.m., Wednesday, March 24, 2010.

**PLACE:** Department of State, 2201 C Street, NW., Washington, DC 20520.

**FOR FURTHER INFORMATION CONTACT:** Information on the meeting may be obtained from Romell Cummings via e-mail at *Board@mcc.gov* or by telephone at (202) 521–3600.

**STATUS:** Meeting will be closed to the public.

**MATTERS TO BE CONSIDERED:** The Board of Directors (the "Board") of the Millennium Challenge Corporation ("MCC") will hold a meeting to discuss approval of the Philippines Compact; compact implementation; and certain administrative matters. The agenda

items are expected to involve the consideration of classified information and the meeting will be closed to the public.

Dated: March 5, 2010.

**Henry C. Pitney,**

*Acting Vice President and General Counsel, Millennium Challenge Corporation.*

[FR Doc. 2010–5170 Filed 3–5–10; 4:15 pm]

BILLING CODE 9211–03–P

## NATIONAL FOUNDATION FOR THE ARTS AND THE HUMANITIES

### National Endowment for the Arts

### National Council on the Arts 169th Meeting

Pursuant to section 10(a)(2) of the Federal Advisory Committee Act (Pub. L. 92–463), as amended, notice is hereby given that a meeting of the National Council on the Arts will be held on March 25–26, 2010 in Rooms 716 and M–09 at the Nancy Hanks Center, 1100 Pennsylvania Avenue, NW., Washington, DC 20506.

This meeting, from 5 p.m. to 5:30 p.m. on Thursday, March 25th in Room 716 and from 9 a.m. to 10:45 a.m. on Friday, March 26th in Room M–09 (ending time is approximate), will be open to the public on a space available basis. The Thursday agenda will include review and voting on applications and guidelines. On Friday, the meeting will begin with opening remarks by the Chairman, including a tribute to former NEA Folk Arts Director Bess Lomax Hawes, swearing-in of new Council member Irvin Mayfield, and Congressional/White House/Budget updates. This will be followed by a presentation on *Survey of Public Participation in the Arts* by Sunil Iyengar. The meeting will adjourn following concluding remarks.

If, in the course of the open session discussion, it becomes necessary for the Council to discuss non-public commercial or financial information of intrinsic value, the Council will go into closed session pursuant to subsection (c)(4) of the Government in the Sunshine Act, 5 U.S.C. 552b, and in accordance with the determination of the Chairman of November 10, 2009. Additionally, discussion concerning purely personal information about individuals, submitted with grant applications, such as personal biographical and salary data or medical information, may be conducted by the Council in closed session in accordance with subsection (c)(6) of 5 U.S.C. 552b.

Any interested persons may attend, as observers, Council discussions and reviews that are open to the public. If you need special accommodations due to a disability, please contact the Office of AccessAbility, National Endowment for the Arts, 1100 Pennsylvania Avenue, NW., Washington, DC 20506, 202/682–5532, TTY–TDD 202/682–5429, at least seven (7) days prior to the meeting.

Further information with reference to this meeting can be obtained from the Office of Communications, National Endowment for the Arts, Washington, DC 20506, at 202/682–5570.

Dated: March 4, 2010.

**Kathy Plowitz-Worden,**

*Panel Coordinator, Office of Guidelines and Panel Operations.*

[FR Doc. 2010–4917 Filed 3–8–10; 8:45 am]

BILLING CODE 7537–01–P

## NUCLEAR REGULATORY COMMISSION

**[NRC–2010–0081]**

### Biweekly Notice; Applications and Amendments to Facility Operating Licenses Involving No Significant Hazards Considerations

#### Background

Pursuant to section 189a (2) of the Atomic Energy Act of 1954, as amended (the Act), the U.S. Nuclear Regulatory Commission (the Commission or NRC) is publishing this regular biweekly notice. The Act requires the Commission publish notice of any amendments issued, or proposed to be issued and grants the Commission the authority to issue and make immediately effective any amendment to an operating license upon a determination by the Commission that such amendment involves no significant hazards consideration, notwithstanding the pendency before the Commission of a request for a hearing from any person.

This biweekly notice includes all notices of amendments issued, or proposed to be issued from February 11, 2010, to February 24, 2010. The last biweekly notice was published on February 23, 2010 (75 FR 8139).

*Notice of Consideration of Issuance of Amendments to Facility Operating Licenses, Proposed No Significant Hazards Consideration Determination, and Opportunity for a Hearing*

The Commission has made a proposed determination that the following amendment requests involve no significant hazards consideration. Under the Commission's regulations in Title 10 of the *Code of Federal Regulations* (10 CFR), Section 50.92, this means that operation of the facility in accordance with the proposed amendment would not (1) involve a significant increase in the probability or consequences of an accident previously evaluated; or (2) create the possibility of a new or different kind of accident from any accident previously evaluated; or (3) involve a significant reduction in a margin of safety. The basis for this proposed determination for each amendment request is shown below.

The Commission is seeking public comments on this proposed determination. Any comments received within 30 days after the date of publication of this notice will be considered in making any final determination.

Normally, the Commission will not issue the amendment until the expiration of 60 days after the date of publication of this notice. The Commission may issue the license amendment before expiration of the 60-day period provided that its final determination is that the amendment involves no significant hazards consideration. In addition, the Commission may issue the amendment prior to the expiration of the 30-day comment period should circumstances change during the 30-day comment period such that failure to act in a timely way would result, for example in derating or shutdown of the facility. Should the Commission take action prior to the expiration of either the comment period or the notice period, it will publish in the **Federal Register** a notice of issuance. Should the Commission make a final No Significant Hazards Consideration Determination, any hearing will take place after issuance. The Commission expects that the need to take this action will occur very infrequently.

Written comments may be submitted by mail to the Chief, Rulemaking and Directives Branch (RDB), TWB–05–B01M, Division of Administrative Services, Office of Administration, U.S. Nuclear Regulatory Commission, Washington, DC 20555–0001, and should cite the publication date and page number of this **Federal Register** notice. Written comments may also be faxed to the RDB at 301–492–3446. Documents may be examined, and/or copied for a fee, at the NRC's Public Document Room (PDR), located at One White Flint North, Public File Area O1F21, 11555 Rockville Pike (first floor), Rockville, Maryland.

Within 60 days after the date of publication of this notice, any person(s) whose interest may be affected by this action may file a request for a hearing and a petition to intervene with respect to issuance of the amendment to the

subject facility operating license. Requests for a hearing and a petition for leave to intervene shall be filed in accordance with the Commission's "Rules of Practice for Domestic Licensing Proceedings" in 10 CFR part 2. Interested person(s) should consult a current copy of 10 CFR 2.309, which is available at the Commission's PDR, located at One White Flint North, Public File Area O1F21, 11555 Rockville Pike (first floor), Rockville, Maryland. Publicly available records will be accessible from the Agencywide Documents Access and Management System's (ADAMS) Public Electronic Reading Room on the Internet at the NRC Web site, *http://www.nrc.gov/reading-rm/doc-collections/cfr/.* If a request for a hearing or petition for leave to intervene is filed by the above date, the Commission or a presiding officer designated by the Commission or by the Chief Administrative Judge of the Atomic Safety and Licensing Board Panel, will rule on the request and/or petition; and the Secretary or the Chief Administrative Judge of the Atomic Safety and Licensing Board will issue a notice of a hearing or an appropriate order.

As required by 10 CFR 2.309, a petition for leave to intervene shall set forth with particularity the interest of the petitioner in the proceeding, and how that interest may be affected by the results of the proceeding. The petition should specifically explain the reasons why intervention should be permitted with particular reference to the following general requirements: (1) The name, address, and telephone number of the requestor or petitioner; (2) the nature of the requestor's/petitioner's right under the Act to be made a party to the proceeding; (3) the nature and extent of the requestor's/petitioner's property, financial, or other interest in the proceeding; and (4) the possible effect of any decision or order which may be entered in the proceeding on the requestor's/petitioner's interest. The petition must also identify the specific contentions which the requestor/petitioner seeks to have litigated at the proceeding.

Each contention must consist of a specific statement of the issue of law or fact to be raised or controverted. In addition, the requestor/petitioner shall provide a brief explanation of the bases for the contention and a concise statement of the alleged facts or expert opinion which support the contention and on which the requestor/petitioner intends to rely in proving the contention at the hearing. The requestor/petitioner must also provide references to those specific sources and documents of which the petitioner is aware and on which the requestor/petitioner intends to rely to establish those facts or expert opinion. The petition must include sufficient information to show that a genuine dispute exists with the applicant on a material issue of law or fact. Contentions shall be limited to matters within the scope of the amendment under consideration. The contention must be one which, if proven, would entitle the requestor/petitioner to relief. A requestor/petitioner who fails to satisfy these requirements with respect to at least one contention will not be permitted to participate as a party.

Those permitted to intervene become parties to the proceeding, subject to any limitations in the order granting leave to intervene, and have the opportunity to participate fully in the conduct of the hearing.

If a hearing is requested, the Commission will make a final determination on the issue of no significant hazards consideration. The final determination will serve to decide when the hearing is held. If the final determination is that the amendment request involves no significant hazards consideration, the Commission may issue the amendment and make it immediately effective, notwithstanding the request for a hearing. Any hearing held would take place after issuance of the amendment. If the final determination is that the amendment request involves a significant hazards consideration, any hearing held would take place before the issuance of any amendment.

All documents filed in NRC adjudicatory proceedings, including a request for hearing, a petition for leave to intervene, any motion or other document filed in the proceeding prior to the submission of a request for hearing or petition to intervene, and documents filed by interested governmental entities participating under 10 CFR 2.315(c), must be filed in accordance with the NRC E-Filing rule (72 FR 49139, August 28, 2007). The E-Filing process requires participants to submit and serve all adjudicatory documents over the internet, or in some cases to mail copies on electronic storage media. Participants may not submit paper copies of their filings unless they seek an exemption in accordance with the procedures described below.

To comply with the procedural requirements of E-Filing, at least ten (10) days prior to the filing deadline, the participant should contact the Office of the Secretary by e-mail at *hearing.docket@nrc.gov,* or by telephone at (301) 415–1677, to request (1) a digital ID certificate, which allows the participant (or its counsel or representative) to digitally sign documents and access the E-Submittal server for any proceeding in which it is participating; and (2) advise the Secretary that the participant will be submitting a request or petition for hearing (even in instances in which the participant, or its counsel or representative, already holds an NRC-issued digital ID certificate). Based upon this information, the Secretary will establish an electronic docket for the hearing in this proceeding if the Secretary has not already established an electronic docket.

Information about applying for a digital ID certificate is available on NRC's public Web site at *http://www.nrc.gov/site-help/e-submittals/apply-certificates.html.* System requirements for accessing the E-Submittal server are detailed in NRC's "Guidance for Electronic Submission," which is available on the agency's public Web site at *http://www.nrc.gov/site-help/e-submittals.html.* Participants may attempt to use other software not listed on the Web site, but should note that the NRC's E-Filing system does not support unlisted software, and the NRC Meta System Help Desk will not be able to offer assistance in using unlisted software.

If a participant is electronically submitting a document to the NRC in accordance with the E-Filing rule, the participant must file the document using the NRC's online, Web-based submission form. In order to serve documents through EIE, users will be required to install a Web browser plug-in from the NRC Web site. Further information on the Web-based submission form, including the installation of the Web browser plug-in, is available on the NRC's public Web site at *http://www.nrc.gov/site-help/e-submittals.html.*

Once a participant has obtained a digital ID certificate and a docket has been created, the participant can then submit a request for hearing or petition for leave to intervene. Submissions should be in Portable Document Format (PDF) in accordance with NRC guidance available on the NRC public Web site at *http://www.nrc.gov/site-help/e-submittals.html.* A filing is considered complete at the time the documents are submitted through the NRC's E-Filing system. To be timely, an electronic filing must be submitted to the E-Filing system no later than 11:59 p.m. Eastern Time on the due date. Upon receipt of a transmission, the E-Filing system time-stamps the document and sends

the submitter an e-mail notice confirming receipt of the document. The E-Filing system also distributes an e-mail notice that provides access to the document to the NRC Office of the General Counsel and any others who have advised the Office of the Secretary that they wish to participate in the proceeding, so that the filer need not serve the documents on those participants separately. Therefore, applicants and other participants (or their counsel or representative) must apply for and receive a digital ID certificate before a hearing request/petition to intervene is filed so that they can obtain access to the document via the E-Filing system.

A person filing electronically using the agency's adjudicatory E-Filing system may seek assistance by contacting the NRC Meta System Help Desk through the "Contact Us" link located on the NRC Web site at *http://www.nrc.gov/site-help/e-submittals.html,* by e-mail at *MSHD.Resource@nrc.gov,* or by a toll-free call at (866) 672–7640. The NRC Meta System Help Desk is available between 8 a.m. and 8 p.m., Eastern Time, Monday through Friday, excluding government holidays.

Participants who believe that they have a good cause for not submitting documents electronically must file an exemption request, in accordance with 10 CFR 2.302(g), with their initial paper filing requesting authorization to continue to submit documents in paper format. Such filings must be submitted by: (1) First class mail addressed to the Office of the Secretary of the Commission, U.S. Nuclear Regulatory Commission, Washington, DC 20555–0001, Attention: Rulemaking and Adjudications Staff; or (2) courier, express mail, or expedited delivery service to the Office of the Secretary, Sixteenth Floor, One White Flint North, 11555 Rockville Pike, Rockville, Maryland 20852, Attention: Rulemaking and Adjudications Staff. Participants filing a document in this manner are responsible for serving the document on all other participants. Filing is considered complete by first-class mail as of the time of deposit in the mail, or by courier, express mail, or expedited delivery service upon depositing the document with the provider of the service. A presiding officer, having granted an exemption request from using E-Filing, may require a participant or party to use E-Filing if the presiding officer subsequently determines that the reason for granting the exemption from use of E-Filing no longer exists.

Documents submitted in adjudicatory proceedings will appear in NRC's electronic hearing docket which is available to the public at *http://ehd.nrc.gov/EHD_Proceeding/home.asp,* unless excluded pursuant to an order of the Commission, or the presiding officer. Participants are requested not to include personal privacy information, such as social security numbers, home addresses, or home phone numbers in their filings, unless an NRC regulation or other law requires submission of such information. With respect to copyrighted works, except for limited excerpts that serve the purpose of the adjudicatory filings and would constitute a Fair Use application, participants are requested not to include copyrighted materials in their submission.

Petitions for leave to intervene must be filed no later than 60 days from the date of publication of this notice. Non-timely filings will not be entertained absent a determination by the presiding officer that the petition or request should be granted or the contentions should be admitted, based on a balancing of the factors specified in 10 CFR 2.309(c)(1)(i)–(viii).

For further details with respect to this license amendment application, see the application for amendment which is available for public inspection at the Commission's PDR, located at One White Flint North, Public File Area O1F21, 11555 Rockville Pike (first floor), Rockville, Maryland. Publicly available records will be accessible from the ADAMS Public Electronic Reading Room on the Internet at the NRC Web site, *http://www.nrc.gov/reading-rm/adams.html.* Persons who do not have access to ADAMS or who encounter problems in accessing the documents located in ADAMS, should contact the NRC PDR Reference staff at 1–800–397–4209, 301–415–4737, or by e-mail to *pdr.resource@nrc.gov.*

*Duke Energy Carolinas, LLC, et al., Docket Nos. 50–413 and 50–414, Catawba Nuclear Station, Units 1 and 2, York County, South Carolina*

*Date of amendment request:* May 28, 2009.

*Description of amendment request:* The amendments would revise Technical Specification (TS) 3.8.1, "AC Sources-Operating," to restrict voltage limits for the applicable TS 3.8.1 surveillances governing the Emergency Diesel Generators (EDGs).

*Basis for proposed no significant hazards consideration determination:* As required by 10 CFR 50.91(a), the licensee has provided its analysis of the issue of no significant hazards consideration, which is presented below:

1. Does the proposed change involve a significant increase in the probability or consequences of an accident previously evaluated?

No. The increase in the minimum EDG output voltage acceptance value in TS 3.8.1 Surveillance Requirements does not adversely affect any of the parameters in the accident analyses. The proposed change increases the minimum allowed EDG output voltage to ensure that sufficient voltage is available to operate the required Emergency Safety Feature (ESF) equipment under accident conditions. Additionally the increase in minimum voltage output voltage allowed ensures that adequate voltage is available to support the assumptions made in the Design Bases Accident (DBA) analyses. This conservative change of the EDG voltage output acceptance criteria does not affect the probability of evaluated accidents, but rather provides increased assurance that the EDGs will provide a sufficient voltage. Therefore, the proposed change does not involve a significant increase in the probability or consequences of an accident previously evaluated.

2. Does the proposed change create the possibility of a new or different kind of accident from any accident previously evaluated?

No. The increase in the minimum EDG output voltage acceptance criterion supports the assumptions in the accident analyses that sufficient voltage will be available to operate ESF equipment on the Class 1E buses when these buses are powered from the Emergency Diesel Generators. The maximum EDG output voltage of 4580 volts is not affected by this change. The change in minimum output voltage from 3740 to 3950 volts ensures the reliability of the onsite emergency power source. Therefore, the proposed change will not create the possibility of a new or different kind of accident from any previously evaluated.

3. Does the proposed change involve a significant reduction in margin of safety?

This proposed license amendment is limited to increasing the minimum EDG output voltage acceptance criterion in TS 3.8.1 Surveillance Requirements. No other surveillance criterion is affected. The surveillance frequencies and test requirement are unchanged. This amendment provides increased assurance that the EDG will provide sufficient voltage to its respective components to ensure design requirements are satisfied. Therefore, the proposed change will not involve a significant reduction in a margin of safety.

The NRC staff has reviewed the licensee's analysis and, based on this review, it appears that the three standards of 10 CFR 50.92(c) are satisfied. Therefore, the NRC staff proposes to determine that the amendment request involves no significant hazards consideration.

*Attorney for licensee:* Ms. Lisa F. Vaughn, Associate General Counsel and Managing Attorney, Duke Energy Carolinas, LLC, 526 South Church Street, EC07H, Charlotte, NC 28202.

*NRC Branch Chief:* Gloria Kulesa.

*Duke Energy Carolinas, LLC, et al., Docket Nos. 50–413 and 50–414, Catawba Nuclear Station, Units 1 and 2, York County, South Carolina*

*Date of amendment request:* July 1, 2009.

*Description of amendment request:* The proposed amendments would revise TS 3.3.1, "Reactor Trip System (RTS) Instrumentation" and TS 1.1, "Definitions." The proposed amendments support plant modifications which would replace the existing Source Range (SR) and Intermediate Range (IR) excore detector systems with equivalent neutron monitoring systems. The new instrumentation will perform both the SR and the IR monitoring functions.

Implementation of the above changes will entail plant modifications and will impact the Updated Final Safety Analysis Reports (UFSAR). The necessary UFSAR revisions will be submitted in accordance with 10 CFR 50.71(e).

*Basis for proposed no significant hazards consideration determination:* As required by 10 CFR 50.91(a), the licensee has provided its analysis of the issue of no significant hazards consideration, which is presented below:

1. Does the proposed amendment involve a significant increase in the probability or consequences of an accident previously evaluated?

Response: No

The proposed Technical Specification changes are in support of a plant modification involving the replacement and upgrade of the Nuclear Instrumentation System (NIS) Source Range and Intermediate Range instrumentation. The specific Technical Specification changes are associated with 1) the methods of calibrating NIS channels; 2) the definition of Nominal Trip Setpoint; 3) the specific Nominal Trip Setpoint and Allowable Values for various NIS channels, including the Intermediate Range, Source Range and Intermediate Range Permissive "P–6" instrumentation; 4) the addition of specific requirements to be taken if an as-found Intermediate Range or Source Range channel setpoint is outside its predefined as-found tolerance; and 5) the addition of specific requirements regarding resetting of an Intermediate Range or Source Range channel setpoint within an as-left tolerance.

The NIS is accident mitigation equipment and does not affect the probability of any accident being initiated. In addition, none of the above-mentioned proposed Technical Specification changes affect the probability of any accident being initiated.

The performance of the replacement SR and IR detectors and associated equipment will equal or exceed that of the existing instrumentation. The proposed changes to Nominal Trip Setpoints and Allowable Values are based on accepted industry standards and will preserve assumptions in the applicable accident analyses. None of the proposed changes alter any assumption previously made in the radiological consequences evaluations, nor do they affect mitigation of the radiological consequences of an accident previously evaluated.

In summary, the proposed changes will not involve a significant increase in the probability or consequences of an accident previously evaluated.

2. Does the proposed amendment create the possibility of a new or different kind of accident from any accident previously evaluated?

Response: No

No new accident scenarios, failure mechanisms, or single failures are introduced as a result of any of the proposed changes. The NIS is not capable by itself of initiating any accident. Other than the replacement of the detectors themselves and the associated hardware, no physical changes to the overall plant are being proposed. No changes to the overall manner in which the plant is operated are being proposed. Therefore, none of the proposed changes will create the possibility of a new or different kind of accident from any accident previously evaluated.

3. Does the proposed amendment involve a significant reduction in a margin of safety?

Response: No

Margin of safety is related to the confidence in the ability of the fission product barriers to perform their intended functions. These barriers include the fuel cladding, the reactor coolant system pressure boundary, and the containment barriers. The modification to replace the SR and IR detectors and associated equipment will not have any impact on these barriers. In addition, the proposed Technical Specification changes will not have any impact on these barriers. No accident mitigating equipment will be adversely impacted as a result of the modification. The proposed changes do not affect any safety analysis conclusions because the SR and IR neutron flux trips are not explicitly credited in any accident analysis. The replacement instrumentation will have overall performance capabilities equal to or greater than those for the existing instrumentation. Therefore, existing safety margins will be preserved. None of the proposed changes will involve a significant reduction in a margin of safety.

The NRC staff has reviewed the licensee's analysis and, based on this review, it appears that the three standards of 10 CFR 50.92(c) are satisfied. Therefore, the NRC staff proposes to determine that the amendment request involves no significant hazards consideration.

*Attorney for licensee:* Ms. Lisa F. Vaughn, Associate General Counsel and Managing Attorney, Duke Energy Carolinas, LLC, 526 South Church Street, EC07H, Charlotte, NC 28202.

*NRC Branch Chief:* Gloria Kulesa.

*Duke Energy Carolinas, LLC, Docket Nos. 50–369 and 50–370, McGuire Nuclear Station, Units 1 and 2, Mecklenburg County, North Carolina*

*Date of amendment request:* July 1, 2009.

*Description of amendment request:* The proposed amendments would revise TS 3.3.1, "Reactor Trip System (RTS) Instrumentation." The proposed amendments support plant modifications which would replace the existing Source Range (SR) and Intermediate Range (IR) excore detector systems with equivalent neutron monitoring systems. The new instrumentation will perform both the SR and the IR monitoring functions.

Implementation of the above changes will entail plant modifications and will impact the Updated Final Safety Analysis Reports (UFSAR). The necessary UFSAR revisions will be submitted in accordance with 10 CFR 50.71(e).

*Basis for proposed no significant hazards consideration determination:* As required by 10 CFR 50.91(a), the licensee has provided its analysis of the issue of no significant hazards consideration, which is presented below:

1. Does the proposed amendment involve a significant increase in the probability or consequences of an accident previously evaluated?

Response: No

The proposed Technical Specification changes are in support of a plant modification involving the replacement and upgrade of the Nuclear Instrumentation System (NIS) Source Range and Intermediate Range instrumentation. The specific Technical Specification changes are associated with (1) the methods of calibrating NIS channels; (2) the definition of Nominal Trip Setpoint; (3) the specific Nominal Trip Setpoint and Allowable Values for various NIS channels, including the Intermediate Range, Source Range and Intermediate Range Permissive "P–6" instrumentation; (4) the addition of specific requirements to be taken if an as-found Intermediate Range or Source Range channel setpoint is outside its predefined as-found tolerance; and (5) the addition of specific requirements regarding resetting of an Intermediate Range or Source Range channel setpoint within an as-left tolerance.

The NIS is accident mitigation equipment and does not affect the probability of any accident being initiated. In addition, none of the above-mentioned proposed Technical Specification changes affect the probability of any accident being initiated.

The performance of the replacement SR and IR detectors and associated equipment will equal or exceed that of the existing instrumentation. The proposed changes to Nominal Trip Setpoints and Allowable Values are based on accepted industry standards and will preserve assumptions in

the applicable accident analyses. None of the proposed changes alter any assumption previously made in the radiological consequences evaluations, nor do they affect mitigation of the radiological consequences of an accident previously evaluated.

In summary, the proposed changes will not involve a significant increase in the probability or consequences of an accident previously evaluated.

2. Does the proposed amendment create the possibility of a new or different kind of accident from any accident previously evaluated?

Response: No

No new accident scenarios, failure mechanisms, or single failures are introduced as a result of any of the proposed changes. The NIS is not capable by itself of initiating any accident. Other than the replacement of the detectors themselves and the associated hardware, no physical changes to the overall plant are being proposed. No changes to the overall manner in which the plant is operated are being proposed. Therefore, none of the proposed changes will create the possibility of a new or different kind of accident from any accident previously evaluated.

3. Does the proposed amendment involve a significant reduction in a margin of safety?

Response: No

Margin of safety is related to the confidence in the ability of the fission product barriers to perform their intended functions. These barriers include the fuel cladding, the reactor coolant system pressure boundary, and the containment barriers. The modification to replace the SR and IR detectors and associated equipment will not have any impact on these barriers. In addition, the proposed Technical Specification changes will not have any impact on these barriers. No accident mitigating equipment will be adversely impacted as a result of the modification. The proposed changes do not affect any safety analysis conclusions because the SR and IR neutron flux trips are not explicitly credited in any accident analysis. The replacement instrumentation will have overall performance capabilities equal to or greater than those for the existing instrumentation. Therefore, existing safety margins will be preserved. None of the proposed changes will involve a significant reduction in a margin of safety.

The NRC staff has reviewed the licensee's analysis and, based on this review, it appears that the three standards of 10 CFR 50.92(c) are satisfied. Therefore, the NRC staff proposes to determine that the amendment request involves no significant hazards consideration.

*Attorney for licensee:* Ms. Lisa F. Vaughn, Associate General Counsel and Managing Attorney, Duke Energy Carolinas, LLC, 526 South Church Street, EC07H, Charlotte, NC 28202.

*NRC Branch Chief:* Gloria Kulesa.

*Duke Energy Carolinas, LLC, Docket Nos. 50–269, 50–270, and 50–287, Oconee Nuclear Station, Units 1, 2, and 3, Oconee County, South Carolina; Docket Nos. 50–369 and 50–370, McGuire Nuclear Station, Units 1 and 2, Mecklenburg County, North Carolina; Docket Nos. 50–413 and 50–414, Catawba Nuclear Station, Units 1 and 2, York County, South Carolina*

*Date of amendment request:* May 18, 2009.

*Description of amendment request:* The proposed amendments would revise the Technical Specifications to adopt Technical Specification Task Force (TSTF) Standard Technical Specification Change Traveler TSTF–248. TSTF 248 modifies the definition of shutdown margin.

*Basis for proposed no significant hazards consideration determination:* As required by 10 CFR 50.91(a), the licensee has provided its analysis of the issue of no significant hazards consideration, which is presented below:

Criterion 1:

Does the proposed amendment involve a significant increase in the probability or consequences of an accident previously evaluated?

Response: No.

The revision to SDM [shutdown margin] definition will result in analytical flexibility for determining SDM. Changes in the definition will not have an impact on the probability of an accident previously evaluated.

The introduction of this definition change does not change continued compliance with all applicable regulatory requirements and design criteria (e.g., train separation, redundancy, and single failure). Therefore, since all plant systems will continue to function as designed, all plant parameters will remain within their design limits. As a result, the proposed changes will not increase the consequences of an accident.

Based on this discussion, the proposed amendments do not significantly increase the probability or consequences of an accident previously evaluated.

Criterion 2:

Does the proposed amendment create the possibility of a new or different kind of accident from any accident previously evaluated?

Response: No.

Revising the TS [Technical Specifications] definition of SDM would not require core designers to revise any SDM boron calculations. Rather, it would afford the analytical flexibility for determining SDM for a particular circumstance.

The proposed changes do not involve any change in the design, configuration, or operation of the nuclear plant. The current plant safety analyses, therefore, remain complete and accurate in addressing the design basis events and in analyzing plant response and consequences.

The Limiting Conditions for Operations, Limiting Safety System Settings and Safety Limits specified in the Technical Specifications are not affected by the proposed changes. As such, the plant conditions for which the design basis accident analyses were performed remain valid.

The amendment does not introduce a new mode of plant operation or new accident precursors, does not involve any physical alterations to plant configurations or make changes to system set points that could initiate a new or different kind of accident.

Therefore, the proposed amendment does not create the possibility of a new or different kind of accident from any accident previously evaluated.

Criterion 3:

Does the proposed amendment involve a significant reduction in a margin of safety?

Response: No.

Margin of safety is related to the confidence in the ability of the fission product barriers to perform their accident mitigation functions. These barriers include the fuel and fuel cladding, the reactor coolant system, and the containment and containment related systems. The proposed changes will not impact the reliability of these barriers to function. Radiological doses to plant operators or to the public will not be impacted as a result of the proposed change. The change in the TS definition will have no impact to these barriers. Adequate SDM will continue to be ensured for all operational conditions.

Therefore, the proposed change does not involve a significant reduction in a margin of safety.

The NRC staff has reviewed the licensee's analysis and, based on this review, it appears that the three standards of 10 CFR 50.92(c) are satisfied. Therefore, the NRC staff proposes to determine that the amendment request involves no significant hazards consideration.

*Attorney for licensee:* Ms. Lisa F. Vaughn, Associate General Counsel and Managing Attorney, Duke Energy Carolinas, LLC, 526 South Church Street, EC07H, Charlotte, NC 28202.

*NRC Branch Chief:* Gloria Kulesa.

*Duke Energy Carolinas, LLC, Docket Nos. 50–269, 50–270, and 50–287, Oconee Nuclear Station, Units 1, 2, and 3, Oconee County, South Carolina*

*Date of amendment request:* August 6, 2009.

*Description of amendment request:* The proposed amendments would revise the Technical Specifications by changing the surveillance requirement for the low temperature overpressure protection system (LTOP) from 6 months to 18 months.

*Basis for proposed no significant hazards consideration determination:* As required by 10 CFR 50.91(a), the licensee has provided its analysis of the

issue of no significant hazards consideration, which is presented below:

(1) Does the proposed amendment involve a significant increase in the probability or consequences of an accident previously evaluated?

No. This is a revision to the Technical Specification (TS) Surveillance Requirement (SR) for performing the channel calibration for the power operated relief valve (PORV). As such, the TS SR interval extension continues to ensure the calibration is performed in a time frame supported by current analysis. The instrumentation loop has been upgraded to an environmentally qualified instrumentation loop with improved instrument uncertainty and reliability. The accidents previously evaluated have not changed.

Therefore, extending the TS SR frequency from 6 months to 18 months does not significantly increase the probability or consequences of any accident previously evaluated.

(2) Does the proposed amendment create the possibility of a new or different kind of accident from any accident previously evaluated?

No. This revision does not impact the LTOP evaluation analysis. The method for testing remains the same. The proposed SR frequency is supported by an environmentally qualified instrumentation loop with improved instrument uncertainty and reliability.

Therefore, extending the TS SR frequency from 6 months to 18 months will not create the possibility of a new or different kind of accident from any kind of accident previously evaluated.

(3) Does the proposed amendment involve a significant reduction in a margin of safety?

No. The proposed change does not adversely affect any plant safety limits, setpoints, or design parameters. The change also does not adversely affect the fuel, fuel cladding, Reactor Coolant System, or Containment Operability.

Therefore, extending the TS SR frequency from 6 months to 18 months does not involve a significant reduction in a margin of safety.

The NRC staff has reviewed the licensee's analysis and, based on this review, it appears that the three standards of 10 CFR 50.92(c) are satisfied. Therefore, the NRC staff proposes to determine that the amendment request involves no significant hazards consideration.

*Attorney for licensee:* Ms. Lisa F. Vaughn, Associate General Counsel and Managing Attorney, Duke Energy Carolinas, LLC, 526 South Church Street, EC07H, Charlotte, NC 28202.

*NRC Branch Chief:* Gloria Kulesa.

*Duke Energy Carolinas, LLC, Docket Nos. 50–269, 50–270, and 50–287, Oconee Nuclear Station, Units 1, 2, and 3, Oconee County, South Carolina*

*Date of amendment request:* August 31, 2009.

*Description of amendment request:* The proposed amendments would revise the Technical Specifications to allow one of the two required 230kV switchyard 125 VDC power source batteries to be inoperable for up to 10 hours for the purpose of replacing an entire battery bank and performing the required testing.

*Basis for proposed no significant hazards consideration determination:* As required by 10 CFR 50.91(a), the licensee has provided its analysis of the issue of no significant hazards consideration, which is presented below:

(1) Does the proposed change involve a significant increase in the probability or consequences of an accident previously evaluated?

No. This License Amendment Request (LAR) proposes to permit one of the two 230 kV switchyard 125 VDC batteries to be out of service for up to ten days when it is necessary to replace and test a complete battery (all cells of one battery bank). The capacity of each battery, needing only 58 of 60 cells to be available (i.e., two cells can be jumpered out), is sufficient to carry the loads of both distribution centers during replacement.

The 230kV switchyard 125 VDC power system is credited to provide uninterruptible power to specified loads during certain design basis events. The probability of any of these events occurring is not impacted by removing one of the batteries for replacement. The consequences associated with permitting a 230 kV switchyard 125 VDC battery to be out of service for up to ten days for battery replacement have been evaluated. The likelihood of an event occurring during the additional time a battery bank will be out of service is essentially the same as that of an event occurring during the 24 hour period permitted by the existing completion time. Operation in accordance with the amendment authorizing this change would not involve any accident initiation sequences or radiological release pathways that could affect the consequences of any accident analyzed. Use of this additional time for battery replacement will be infrequent since battery replacement normally is performed at or near the end of the twenty year qualified life.

Therefore, the proposed change does not involve a significant increase in the probability or consequences of an accident previously evaluated.

(2) Does the proposed change create the possibility of a new or different kind of accident from any accident previously evaluated?

No. This License Amendment Request (LAR) proposes to permit one of the two 230 kV switchyard 125 VDC batteries to be out of service for up to ten days when it is necessary to replace and test a complete battery (all cells of one battery). Operation in accordance with this proposed amendment will not result in any new plant equipment, alter the present plant configuration, nor adversely affect how the plant is currently operated.

Therefore, the proposed change does not create the possibility of a new or different kind of accident from any previously evaluated.

(3) Does the proposed change involve a significant reduction in a margin of safety?

No. This License Amendment Request (LAR) proposes to permit one of the two 230 kV switchyard 125 VDC batteries to be out of service for up to ten days when it is necessary to replace and test a complete battery (all cells of one battery).

Since the proposed change will not physically alter the present plant configuration nor adversely affect how the plant is currently operated, the proposed change does not adversely affect any plant safety limits, setpoints, or design parameters. The change also does not adversely affect the fuel, fuel cladding, Reactor Coolant System or containment integrity.

Therefore, the proposed change does not involve a significant reduction in a margin of safety.

The NRC staff has reviewed the licensee's analysis and, based on this review, it appears that the three standards of 10 CFR 50.92(c) are satisfied. Therefore, the NRC staff proposes to determine that the amendment request involves no significant hazards consideration.

*Attorney for licensee:* Ms. Lisa F. Vaughn, Associate General Counsel and Managing Attorney, Duke Energy Carolinas, LLC, 526 South Church Street, EC07H, Charlotte, NC 28202.

*NRC Branch Chief:* Gloria Kulesa.

*Duke Energy Carolinas, LLC, Docket Nos. 50–269, 50–270, and 50–287, Oconee Nuclear Station, Units 1, 2, and 3, Oconee County, South Carolina; Docket Nos. 50–369 and 50–370, McGuire Nuclear Station, Units 1 and 2, Mecklenburg County, North Carolina; Docket Nos. 50–413 and 50–414, Catawba Nuclear Station, Units 1 and 2, York County, South Carolina*

*Date of amendment request:* September 30, 2009.

*Description of amendment request:* The proposed amendments would revise the Technical Specifications to allow performance of testing containment spray nozzles for nozzle blockage following activities which could result in nozzle blockage, rather than a fixed periodic basis. Currently the testing for nozzle blockage is performed every 10 years.

*Basis for proposed no significant hazards consideration determination:* As required by 10 CFR 50.91(a), the licensee has provided its analysis of the issue of no significant hazards consideration, which is presented below:

[Criterion 1:]

Does the proposed change involve a significant increase in the probability or

consequences of an accident previously evaluated?

No. The proposed amendment will modify CNS [Catawba Nuclear Station] SR [surveillance requirement] 3.6.6.7, MNS [McGuire Nuclear Station] SR 3.6.6.7, and ONS [Oconee Nuclear Station] SR 3.6.5.8 to change the frequency for verifying spray nozzles are unobstructed. The proposed change modifies the frequency for performance of a surveillance test which does not impact any failure modes that could lead to an accident. The proposed frequency change does not affect the ability of the spray nozzles or spray system to perform its accident mitigation function as assumed and therefore there is no effect on the consequence of any accident. Verification of no blockage continues to be required, but now verification will be performed following activities that could result in nozzle blockage. Based on this discussion, the proposed amendment does not increase the probability or consequence of an accident previously evaluated.

[Criterion 2:]

Does the proposed amendment create the possibility of a new or different kind of accident from any accident previously evaluated?

No. The proposed amendment will modify CNS SR 3.6.6.7, MNS SR 3.6.6.7, and ONS SR 3.6.5.8 to change the frequency for verifying spray nozzles are unobstructed. The spray systems are not being physically modified and there is no impact on the capability of the system to perform accident mitigation functions. No system setpoints are being modified and no changes are being made to the method in which borated water is delivered to the spray nozzles. The testing requirements imposed by this proposed change to check for nozzle blockage following activities that could cause nozzle blockage do not introduce new failure modes for the system. The proposed amendment does not introduce accident initiators or malfunctions that would cause a new or different kind of accident. Therefore, the proposed amendment does not create the possibility of a new or different kind of accident from any accident previously evaluated.

[Criterion 3:]

Does the proposed amendment involve a significant reduction in a margin of safety?

No. The proposed amendment will modify CNS SR 3.6.6.7, MNS SR 3.6.6.7, and ONS SR 3.6.5.8 to change the frequency for verifying spray nozzles are unobstructed. The proposed change does not change or introduce any new setpoints at which mitigating functions are initiated. No changes to the design parameters of the spray systems are being proposed. There are no changes in system operation being proposed by this change that would impact an established safety margin. The proposed change modifies the frequency for verification of nozzle operability in such a way that continued high confidence exists that the spray systems will continue to function as designed. Therefore, based on the above, the proposed amendment does not involve a significant reduction in a margin of safety.

The NRC staff has reviewed the licensee's analysis and, based on this review, it appears that the three standards of 10 CFR 50.92(c) are satisfied. Therefore, the NRC staff proposes to determine that the amendment request involves no significant hazards consideration.

*Attorney for licensee:* Ms. Lisa F. Vaughn, Associate General Counsel and Managing Attorney, Duke Energy Carolinas, LLC, 526 South Church Street, EC07H, Charlotte, NC 28202.

*NRC Branch Chief:* Gloria Kulesa.

*Entergy Nuclear Operations, Inc., Docket No. 50–286, Indian Point Nuclear Generating Unit No. 3, Westchester County, New York*

*Date of amendment request:* November 19, 2009, as supplemented by letter dated January 28, 2010.

*Description of amendment request:* The proposed change will modify the test acceptance criteria in Surveillance Requirement (SR) 3.8.1.10 for the Diesel Generator endurance surveillance test. The proposed change will also incorporate changes to the Standard Technical Specifications made by Technical Specification Task Force (TSTF) 238–A, Revision 3 and TSTF–276–A, Revision 2. Specifically, the proposed change will modify SR notes in TS 3.8.1 and TS 3.8.4

*Basis for proposed no significant hazards consideration determination:* As required by 10 CFR 50.91(a), the licensee has provided its analysis of the issue of no significant hazards consideration, which is presented below:

1. Does the proposed change involve a significant increase in the probability or consequences of an accident previously evaluated?

No. The proposed changes revise the acceptance criteria to be applied to an existing surveillance test of the facility emergency diesel generators (EDGs), allows deviation from that acceptance criteria for certain grid conditions, and allows testing in modes that is normally not done. Performing a surveillance test is done under conditions where it is not an accident initiator and does not increase the probability of an accident occurring. The proposed new acceptance criteria will assure that the EDGs are capable of carrying the peak electrical loading assumed in the various existing safety analyses which take credit for the operation of the EDGs. Establishing acceptance criteria that bound existing analyses validates the related assumption used in those analyses regarding the capability of equipment to mitigate accident conditions. The deviation allowed for grid conditions does not affect the capability of the testing to achieve these purposes. The proposed change to allow testing in modes normally restricted requires an evaluation to ensure, prior to performing the test, that the potential consequences are capable of being addressed by existing procedures and does not create transients or conditions that could significantly affect the possibility of an accident. Therefore the proposed change does not involve a significant increase in the probability or consequences of an accident previously evaluated.

2. Does the change create the possibility of a new or different kind of accident from any accident previously evaluated?

No. The proposed changes revise the test acceptance criteria for a specific performance test conducted on the existing EDG, allows deviation from that acceptance criteria for certain grid conditions, and allows testing in modes that is normally not done. The proposed changes do not involve installation of new equipment or modification of existing equipment, so no new equipment failure modes are introduced. The proposed revision to the EDG surveillance test acceptance criteria also is not a change to the way that the equipment or facility is operated and no new accident initiators are created. The proposed testing on line must be evaluated to assure plant safety is maintained or enhanced, inherent in such an evaluation would be that the testing does not create the possibility of a new or different kind of accident. Therefore the proposed change does not create the possibility of a new or different kind of accident from any accident previously evaluated.

3. Does the proposed change involve a significant reduction in a margin of safety?

No. The conduct of performance tests on safety-related plant equipment is a means of assuring that the equipment is capable of maintaining the margin of safety established in the safety analyses for the facility. The proposed change in the EDG technical specification surveillance test acceptance criteria is consistent with values assumed in existing safety analyses and is consistent with the design rating of the EDGs. The allowance for certain grid conditions does not alter this conclusion since the power factors are conservatively determined. Testing allowed in modes when it is not normally performed is limited to conditions where an evaluation is performed to assure plant safety is maintained or enhanced. Therefore the proposed change does not involve a significant reduction in a margin of safety.

The NRC staff has reviewed the licensee's analysis and, based on this review, it appears that the three standards of 10 CFR 50.92(c) are satisfied. Therefore, the NRC staff proposes to determine that the amendment request involves no significant hazards consideration.

*Attorney for licensee:* Mr. William C. Dennis, Assistant General Counsel, Entergy Nuclear Operations, Inc., 440 Hamilton Avenue, White Plains, NY 10601.

*NRC Branch Chief:* Nancy L. Salgado.

*FirstEnergy Nuclear Operating Company, et al., Docket No. 50–346, Davis-Besse Nuclear Power Station, Unit No. 1, Ottawa County, Ohio*

*Date of amendment request:* December 18, 2009.

*Description of amendment request:* The proposed amendment would incorporate the use of alternate methodologies for the calculation of reactor pressure vessel beltline weld initial reference temperatures, the calculation of the adjusted reference temperatures (ARTs), the development of the reactor pressure vessel pressure-temperature (P–T) limit curves, and the low temperature reactor coolant system (RCS) overpressure analysis into Technical Specification (TS) 5.6.4. The amendment would also revise the analysis requirement for the low temperature RCS overpressure events from 21 to 32 Effective Full Power Years (EFPY) contained in Operating License (OL) Condition 2.C(3)(d). An application that addressed similar issues was previously submitted on April 15, 2009, and the notice of that application was provided in the **Federal Register** on June 16, 2009 (72 FR 28577). Since the licensee eliminated one of the alternate methodologies for the calculation of the adjusted reference temperature (as described in the April 15, 2009, application) and replacing it with the existing Nuclear Regulatory Commission (NRC)-approved methodology, which is described in Regulatory Guide 1.99, Revision 2, "Radiation Embrittlement of Reactor Vessel Materials", in December 19, 2009, the application is being renoticed in its entirety. The notice supersedes the notice published in the **Federal Register** on June 16, 2009.

*Basis for proposed no significant hazards consideration determination:* As required by 10 CFR 50.91(a), the licensee has provided its analysis of the issue of no significant hazards consideration, which is presented below:

1. Does the proposed change involve a significant increase in the probability or consequences of an accident previously evaluated?

Response: No.

The amendment request proposes two changes to the TS/OL. The first change incorporates the use of alternative methodologies to develop the [Davis-Besse Nuclear Power Station, Unit No. 1] DBNPS P–T limit curves and [low temperature over pressure] LTOP limits into TS 5.6.4 to augment the existing listed methodology of BAW–10046A, Revision 2. The second change revises OL Condition 2.C(3)(d) to reflect the revised LTOP analysis is valid to 32 [Effective Full Power Years] EFPY.

The first change incorporates the use of Topical Report BAW–2308, Revisions 1–A and 2–A and [American Society of Mechanical Engineers] ASME Code Cases N–588 and N–640. The topical report and ASME code cases have been approved or accepted for use by the NRC (provided that any conditions/limitations are satisfied). The proposed additions to the methodologies for the reactor vessel P–T curve and LTOP limit development provide an acceptable means of satisfying the requirements of 10 CFR 50, Appendix G. The proposed additions do not alter the design, function, or any operation of any plant equipment. Therefore, the proposed additions do not affect the probability or consequences of any previously evaluated accidents, including reactor coolant pressure boundary failures.

The second change is considered administrative in nature and reflects the revised methodologies. It will not alter the design, function, or operation of any plant equipment. Therefore, the proposed change does not affect the probability or consequences of any previously evaluated accidents.

2. Does the proposed change create the possibility of a new or different kind of accident from any accident previously evaluated?

Response: No.

The amendment request proposes two changes to the TS/OL. The first change incorporates the use of alternative methodologies to develop the DBNPS P–T limit curves and LTOP limits into TS 5.6.4 to augment the existing listed methodology of BAW–10046A, Revision 2. The second change revises OL Condition 2.C(3)(d) to reflect that the revised analysis is valid to 32 EFPY.

The first change incorporates methodologies that either have been approved or accepted for use by the NRC (provided that any conditions/limitations are satisfied). The changes do not alter the design, function, or operation of any plant equipment. The P–T limit curves and LTOP limits will provide the same level of protection to the reactor coolant boundary as was previously evaluated. Therefore, the proposed changes do not create the possibility of a new or different kind of accident from any accident previously evaluated.

The second change is considered administrative in nature and reflects the revised methodologies. It will not alter the design or operation of any plant equipment. Therefore, the proposed change does not create the possibility of a new or different kind of accident from any accident previously evaluated.

3. Does the proposed change involve a significant reduction in a margin of safety?

Response: No.

The amendment request proposes two changes to the TS/OL. The first change incorporates the use of alternative methodologies to develop the DBNPS P–T limit curves and LTOP limits into TS 5.6.4 to augment the existing listed methodology of BAW–10046A, Revision 2. The second change revises OL Condition 2.C(3)(d) to reflect that the revised analysis is valid to 32 EFPY. The first change incorporates methodologies that either have been approved or accepted for use by the NRC (provided that any conditions/limitations are satisfied). The second change is considered administrative in nature and reflects the revised methodologies. The changes do not alter the design, function, or operation of any plant equipment. The P–T limit curves and LTOP limits will provide the same level of protection to the reactor coolant boundary as was previously evaluated. Therefore, the proposed changes do not involve a significant reduction in a margin of safety.

The NRC staff has reviewed the licensee's analysis and, based on this review, it appears that the three standards of 10 CFR 50.92(c) are satisfied. Therefore, the NRC staff proposes to determine that the amendment request involves no significant hazards consideration.

*Attorney for licensee:* David W. Jenkins, Attorney, FirstEnergy Corporation, Mail Stop A–GO–15, 76 South Main Street, Akron, OH 44308.

*NRC Branch Chief:* Stephen Campbell.

*Tennessee Valley Authority, Docket No. 50–390, Watts Bar Nuclear Plant, Unit 1, Rhea County, Tennessee*

*Date of amendment request:* November 30, 2009.

*Description of amendment request:* The proposed amendment would modify conditions and associated actions to Technical Specification 3.8.1, "AC [Alternating Current] Sources Operating." The proposed amendment would revise the Completion Time for restoring one or more inoperable diesel generators (DGs) in one train to an operable status and increase the Completion Time for confirming that the other DGs are not impacted by a common cause failure. *Basis for proposed no significant hazards consideration determination:* As required by 10 CFR 50.91(a), the licensee has provided its analysis of the issue of no significant hazards consideration, which is presented below:

1. Does the proposed amendment involve a significant increase in the probability or consequences of an accident previously evaluated?

Response: No.

The diesel generators (DGs) are designed as backup alternating current (ac) power sources in the event of loss of offsite power. The proposed changes to Completion Times associated with determining inoperable DGs are not subject to common cause failure and restoration of inoperable DGs and the deletion of the note referencing the C–S DG do not change the conditions, operating configurations, or minimum amount of operating equipment assumed in the safety analysis accident mitigation. No changes are proposed in the manner in which the DGs provide plant protection.

Therefore, the proposed change does not involve a significant increase in the probability or consequences of an accident previously evaluated.

2. Does the proposed amendment create the possibility of a new or different kind of accident from any accident previously evaluated?

Response: No.

The proposed changes associated with determining inoperable DGs are not subject to common cause failure and restoration of inoperable DGs and the deletion of the note referencing the C–S DG do not involve a change in design, configuration, or method of operation of the plant. The proposed changes will not alter the manner in which equipment operation is initiated, nor will the functional demands on credited equipment be changed. The capability of the DGs to perform their required safety function will not be affected. The proposed changes do not affect the interaction of the DGs with any system whose failure or malfunction can initiate an accident. As such, no new failure modes are being introduced.

Therefore, the proposed change does not create the possibility of a new or different kind of accident from any accident previously evaluated.

3. Does the proposed amendment involve a significant reduction in a margin of safety?

Response: No.

The DGs are designed as backup AC power sources in the event of loss of offsite power. The proposed changes associated with determining inoperable DGs are not subject to common cause failure and restoration of inoperable DGs and the deletion of the note referencing the C–S DG do not change conditions, operating configurations, or minimum amount of operating equipment assumed in the safety analysis accident mitigation. The proposed changes do not alter the plant design, including instrument setpoints, nor do they alter the assumptions contained in the safety analyses. No changes are proposed in the manner in which the DGs provide plant protection or which create new modes of plant operation.

Therefore, the change does not involve a significant reduction in a margin of safety.

The NRC staff has reviewed the licensee's analysis and, based on this review, it appears that the three standards of 10 CFR 50.92(c) are satisfied. Therefore, the NRC staff proposes to determine that the amendment request involves no significant hazards consideration.

*Attorney for licensee:* General Counsel, Tennessee Valley Authority, 400 West Summit Hill Drive, ET 11A, Knoxville, Tennessee 37902.

*NRC Branch Chief:* L. Raghavan.

*Wolf Creek Nuclear Operating Corporation, Docket No. 50–482, Wolf Creek Generating Station, Coffey County, Kansas*

*Date of amendment request:* December 16, 2009.

*Description of amendment request:* The proposed change would revise the approved fire protection program as described in the Wolf Creek Generating Station (WCGS) Updated Safety Analysis Report (USAR) to allow use of the fire-resistive cable for certain power and control cables associated with two motor-operated valves on Train B Component Cooling Water System. This will be a deviation from certain technical commitments to Title 10 of the *Code of Federal Regulations* (10 CFR) Part 50, Appendix R, Section III.G.2, as described in Appendix 9.5E of the WCGS USAR.

*Basis for proposed no significant hazards consideration determination:* As required by 10 CFR 50.91(a), the licensee has provided its analysis of the issue of no significant hazards consideration, which is presented below:

1. Does the proposed amendment involve a significant increase in the probability or consequences of an accident previously evaluated?

Response: No.

The design function of structures, systems and components are not impacted by the proposed change. The proposed change involves the use of fire-resistive cable at WCGS for certain power and control cables associated with two motor-operated valves (EGHV0016 and EGHV0054) on Train B Component Cooling Water System and will not initiate an event. The proposed change does not alter or prevent the ability of structures, systems, and components (SSCs) from performing their intended function to mitigate the consequences of an initiating event within the assumed acceptance limits. The Meggitt Si 2400 fire-resistive cable has been independently tested to applicable requirements and the implementation design reflects the test results. Therefore, the probability of any accident previously evaluated is not increased. Equipment required to mitigate an accident remains capable of performing the assumed function.

Therefore, the proposed change does not involve a significant increase in the probability or consequences of an accident previously evaluated.

2. Does the proposed amendment create the possibility of a new or different kind of accident from any accident previously evaluated?

Response: No.

The proposed change will not alter the requirements or function for systems required during accident conditions. The design function of structures, systems and components are not impacted by the proposed change. No new or different accidents result from implementing Meggitt Si 2400 fire-resistive cable in Fire Areas A–16 and A–21. The Meggitt Si 2400 fire-resistive cable has been independently tested to applicable requirements and the implementation design reflects the test results. The use of Meggitt Si 2400 fire-resistive cable is not a significant change in the methods governing normal plant operation.

Therefore, the proposed change does not create the possibility of a new or different kind of accident from any accident previously evaluated.

3. Does the proposed amendment involve a significant reduction in a margin of safety?

Response: No.

The proposed change does not alter the manner in which safety limits, limiting safety system settings or limiting conditions for operation are determined. The safety analysis acceptance criteria are not affected by this change. The proposed change will not result in plant operation in a configuration outside the design basis for an unacceptable period of time without mitigating actions. The proposed change does not affect systems that respond to safely shut down the plant and to maintain the plant in a safe shutdown condition.

Therefore, the proposed change does not involve a significant reduction in a margin of safety.

The NRC staff has reviewed the licensee's analysis and, based on this review, it appears that the three standards of 10 CFR 50.92(c) are satisfied. Therefore, the NRC staff proposes to determine that the amendment request involves no significant hazards consideration.

*Attorney for licensee:* Jay Silberg, Esq., Pillsbury Winthrop Shaw Pittman LLP, 2300 N Street, NW., Washington, DC 20037.

*NRC Branch Chief:* Michael T. Markley.

*Wolf Creek Nuclear Operating Corporation, Docket No. 50–482, Wolf Creek Generating Station, Coffey County, Kansas*

*Date of amendment request:* December 16, 2009.

*Description of amendment request:* The proposed change would revise the approved fire protection program as described in the Wolf Creek Generating Station (WCGS) Updated Safety Analysis Report (USAR) to allow use of the fire-resistive cable for certain power and control cables associated with two motor-operated valves on Train B Component Cooling Water System. This will be a deviation from certain technical commitments to Title 10 of the *Code of Federal Regulations* (10 CFR) Part 50, Appendix R, Section III.G.2, as described in Appendix 9.5E of the WCGS USAR.

*Basis for proposed no significant hazards consideration determination:* As required by 10 CFR 50.91(a), the licensee has provided its analysis of the issue of no significant hazards consideration, which is presented below:

1. Does the proposed amendment involve a significant increase in the probability or consequences of an accident previously evaluated?

Response: No.

The design function of structures, systems and components are not impacted by the proposed change. The proposed change involves the use of fire-resistive cable at WCGS for certain power and control cables associated with two motor-operated valves (EGHV0016 and EGHV0054) on Train B Component Cooling Water System and will not initiate an event. The proposed change does not alter or prevent the ability of structures, systems, and components (SSCs) from performing their intended function to mitigate the consequences of an initiating event within the assumed acceptance limits. The Meggitt Si 2400 fire-resistive cable has been independently tested to applicable requirements and the implementation design reflects the test results. Therefore, the probability of any accident previously evaluated is not increased. Equipment required to mitigate an accident remains capable of performing the assumed function.

Therefore, the proposed change does not involve a significant increase in the probability or consequences of an accident previously evaluated.

2. Does the proposed amendment create the possibility of a new or different kind of accident from any accident previously evaluated?

Response: No.

The proposed change will not alter the requirements or function for systems required during accident conditions. The design function of structures, systems and components are not impacted by the proposed change. No new or different accidents result from implementing Meggitt Si 2400 fire-resistive cable in Fire Areas A–16 and A–21. The Meggitt Si 2400 fire-resistive cable has been independently tested to applicable requirements and the implementation design reflects the test results. The use of Meggitt Si 2400 fire-resistive cable is not a significant change in the methods governing normal plant operation.

Therefore, the proposed change does not create the possibility of a new or different kind of accident from any accident previously evaluated.

3. Does the proposed amendment involve a significant reduction in a margin of safety?

Response: No.

The proposed change does not alter the manner in which safety limits, limiting safety system settings or limiting conditions for operation are determined. The safety analysis acceptance criteria are not affected by this change. The proposed change will not result in plant operation in a configuration outside the design basis for an unacceptable period of time without mitigating actions. The proposed change does not affect systems that respond to safely shutdown the plant and to maintain the plant in a safe shutdown condition.

Therefore, the proposed change does not involve a significant reduction in a margin of safety.

The NRC staff has reviewed the licensee's analysis and, based on this review, it appears that the three standards of 10 CFR 50.92(c) are satisfied. Therefore, the NRC staff proposes to determine that the amendment request involves no significant hazards consideration.

*Attorney for licensee:* Jay Silberg, Esq., Pillsbury Winthrop Shaw Pittman LLP, 2300 N Street, NW., Washington, DC 20037.

*NRC Branch Chief:* Michael T. Markley.

*Notice of Issuance of Amendments to Facility Operating Licenses*

During the period since publication of the last biweekly notice, the Commission has issued the following amendments. The Commission has determined for each of these amendments that the application complies with the standards and requirements of the Atomic Energy Act of 1954, as amended (the Act), and the Commission's rules and regulations. The Commission has made appropriate findings as required by the Act and the Commission's rules and regulations in 10 CFR Chapter I, which are set forth in the license amendment.

Notice of Consideration of Issuance of Amendment to Facility Operating License, Proposed No Significant Hazards Consideration Determination, and Opportunity for A Hearing in connection with these actions was published in the **Federal Register** as indicated.

Unless otherwise indicated, the Commission has determined that these amendments satisfy the criteria for categorical exclusion in accordance with 10 CFR 51.22. Therefore, pursuant to 10 CFR 51.22(b), no environmental impact statement or environmental assessment need be prepared for these amendments. If the Commission has prepared an environmental assessment under the special circumstances provision in 10 CFR 51.22(b) and has made a determination based on that assessment, it is so indicated.

For further details with respect to the action see (1) the applications for amendment, (2) the amendment, and (3) the Commission's related letter, Safety Evaluation and/or Environmental Assessment as indicated. All of these items are available for public inspection at the Commission's Public Document Room (PDR), located at One White Flint North, Public File Area 01F21, 11555 Rockville Pike (first floor), Rockville, Maryland. Publicly available records will be accessible from the Agencywide Documents Access and Management System (ADAMS) Public Electronic Reading Room on the internet at the NRC Web site, *http://www.nrc.gov/reading-rm/adams.html.* If you do not have access to ADAMS or if there are problems in accessing the documents located in ADAMS, contact the PDR Reference staff at 1 (800) 397–4209, (301) 415–4737 or by e-mail to *pdr.resource@nrc.gov.*

*Entergy Nuclear Operations, Inc., Docket No. 50–247, Indian Point Nuclear Generating Unit No. 2, Westchester County, New York*

*Date of application for amendment:* March 29, 2009, as supplemented by letters dated September 21 and December 22, 2009.

*Brief description of amendment:* The amendment established a more restrictive acceptance criterion for surveillance requirement (SR) 3.8.6.6 regarding periodic verification of capacity for the affected station batteries.

*Date of issuance:* February 24, 2010.

*Effective date:* As of the date of issuance, and shall be implemented within 30 days.

*Amendment No.:* 264.

*Facility Operating License No. DPR–26:* The amendment revised the License and the Technical Specifications.

*Date of initial notice in* **Federal Register**: May 19, 2009 (74 FR 23444). The supplemental letters dated September 21 and December 22, 2009, provided additional information that clarified the application, did not expand the scope of the application as originally noticed, and did not change the NRC staff's original proposed no significant hazards consideration determination as published in the **Federal Register**.

The Commission's related evaluation of the amendment is contained in a Safety Evaluation dated February 24, 2010.

No significant hazards consideration comments received: No.

*Exelon Generation Company, LLC, Docket Nos. 50–352 and 50–353, Limerick Generating Station, Units 1 and 2, Montgomery County, Pennsylvania*

*Date of application for amendment:* February 25, 2009.

*Brief description of amendment:* The changes remove the provisions contained in Technical Specification (TS) 3/4.4.8, which specify requirements relating to the structural integrity of American Society of Mechanical Engineers (ASME) Code Class 1, 2 and 3 components. This specification is redundant to the requirements contained within Title 10 of the *Code of Federal Regulations* (10 CFR) Section 50.55a, "Codes and standards." With this change, the pressure boundary structural integrity of ASME Code Class 1, 2 and 3

components will continue to be maintained through the facility's compliance with 10 CFR 50.55a.

*Date of issuance:* February 24, 2010.

*Effective date:* As of the date of issuance and shall be implemented within 180 days of issuance.

*Amendment Nos.:* 199 and 160.

*Facility Operating License Nos. NPF–39 and NPF–85.* These amendments revised the license and the technical specifications.

*Date of initial notice in* **Federal Register**: April 21, 2009 (74 FR 18254).

The Commission's related evaluation of the amendments is contained in a Safety Evaluation dated February 24, 2010.

No significant hazards consideration comments received: No.

*National Aeronautics and Space Administration, Docket Nos. 50–30, and 50–185. Erie County, Ohio*

*Date of amendment request:* January 9, 2009, as supplemented by letter dated October 6, 2009.

*Brief description of amendment:* The amendment adds a condition to each license requiring that the National Aeronautics and Space Administration assess the residual radioactivity and demonstrate that the stream bed and banks of Plum Brook between the Plum Brook Station boundary and Sandusky Bay meet the radiological criteria for unrestricted use specified in 10 CFR 20.1402 prior to terminating Licenses TR–3 and R–93.

*Date of issuance:* February 1, 2010.

*Effective date:* February 1, 2010.

*Amendment Nos.:* 14 and 10, respectively.

*Possession Only License Nos. TR–3 and R–93:* The amendment revises both licenses.

*Date of initial notice in* ***Federal Register***: May 5, 2009 (74 FR 20751).

The Commission's related evaluation of the amendment is contained in a Safety Evaluation Report, dated February 1, 2010.

*No Significant Hazards Consideration Comments Received:* No.

*National Aeronautics and Space Administration, Docket Nos. 50–30, and 50–185. Erie County, Ohio (TAC NO. J00301)*

*Date of amendment request:* January 9, 2009, as supplemented by letter dated October 6, 2009.

*Brief description of amendment:* The amendment adds a condition to each license requiring that the National Aeronautics and Space Administration assess the residual radioactivity and demonstrate that the stream bed and banks of Plum Brook between the Plum Brook Station boundary and Sandusky Bay meet the radiological criteria for unrestricted use specified in 10 CFR 20.1402 prior to terminating Licenses TR–3 and R–93.

*Date of issuance:* February 1, 2010.

*Effective date:* February 1, 2010.

*Amendment Nos.:* 14 and 10, respectively

*Possession Only License Nos. TR–3 and R–93:* The amendment revises both licenses.

*Date of initial notice in* ***Federal Register***: May 5, 2009 (74 FR 20751)

The Commission's related evaluation of the amendment is contained in a Safety Evaluation Report, dated February 1, 2010.

*No Significant Hazards Consideration Comments Received:* No.

*PSEG Nuclear LLC, Docket Nos. 50–272 and 50–311, Salem Nuclear Generating Station, Unit Nos. 1 and 2, Salem County, New Jersey*

*Date of application for amendments:* April 9, 2009.

*Brief description of amendments:* The amendments relocate Technical Specification (TS) requirements pertaining to communications during refueling operations (TS 3/4.9.5), manipulator crane operability (TS 3/4.9.6), and crane travel (TS 3/4.9.7) to the Technical Requirements Manual.

*Date of issuance:* February 17, 2010.

*Effective date:* As of the date of issuance, to be implemented within 60 days.

*Amendment Nos.:* 293 and 277.

*Facility Operating License Nos. DPR–70 and DPR–75:* The amendments revised the TSs and the License.

*Date of initial notice in* ***Federal Register***: August 25, 2009 (74 FR 42929).

The Commission's related evaluation of the amendments is contained in a Safety Evaluation dated February 17, 2010.

*No significant hazards consideration comments received:* No.

Dated at Rockville, Maryland, this 25th day of February 2010.

For the Nuclear Regulatory Commission.

**Allen G. Howe,**

*Deputy Director, Division of Operating Reactor Licensing, Office of Nuclear Reactor Regulation.*

[FR Doc. 2010–4523 Filed 3–8–10; 8:45 am]

**BILLING CODE 7590–01–P**

## NUCLEAR REGULATORY COMMISSION

**[Docket No. 05000271; License No. DPR–28; EA–10–034; NRC–2010–0089]**

## In the Matter of Entergy Nuclear Operations; Vermont Yankee Nuclear Power Station; Demand for Information

**I**

Entergy Nuclear Operations (Entergy) is the holder of Facility Operating License No. DPR–28, issued by the U.S. Nuclear Regulatory Commission (NRC) pursuant to 10 CFR Part 50 on February 28, 1973. The license authorizes the operation of the Vermont Yankee Nuclear Power Station (Vermont Yankee) in accordance with conditions specified therein. The facility is located in Vernon, Vermont.

**II**

The NRC has been monitoring the activities between Entergy and the State of Vermont regarding the veracity of statements made by Entergy officials and staff to the State related to underground piping at Vermont Yankee. On February 24, 2010, Entergy verbally informed the NRC of actions that Entergy has taken regarding certain employees, including some who were removed from their site positions at Vermont Yankee and placed on administrative leave, as a result of its independent internal investigation into alleged contradictory or misleading information provided to the State of Vermont that was not corrected. While the NRC does not have jurisdiction over the communications between Entergy and the State of Vermont, the NRC is aware that some of these individuals have responsibilities that involve decision-making communications material to the NRC and/or involve NRC-regulated activities, such as Regulatory Licensing, Security, and Emergency Preparedness Programs.

**III**

The NRC relies on licensees to provide complete and accurate information in order to make certain licensing and oversight decisions, as required by Title 10 of the Code of Federal Regulations (CFR) 50.9. To date, the NRC has not identified any instances in which Entergy staff or officials have provided incomplete or inaccurate information to the NRC. However, in light of the above, the NRC requires additional information from Entergy to confirm that information provided by these individuals is accurate and the impact of the organizational changes is assessed in the

areas of regulatory program performance and safety culture. In addition, Entergy has not provided the NRC with information describing how the recent personnel changes resulting from the independent internal investigation will affect Entergy's ability to implement NRC-regulated programs at Vermont Yankee, and any compensatory measures Entergy has taken in response. The NRC will independently review and assess the results of Entergy's independent investigation, and determine any implications on NRC-regulated activities at the facility.

**IV**

Accordingly, pursuant to sections 161c, 161o, 182 and 186 of the Atomic Energy Act of 1954, as amended, and the Commission's regulations in 10 CFR 2.204 and 10 CFR 50.54(f), in order for the Commission to determine whether Vermont Yankee's license should be modified, suspended, or revoked, or other enforcement action taken to ensure compliance with NRC regulatory requirements, Entergy is required to submit to the Regional Administrator, NRC Region I, 475 Allendale Road, King of Prussia, PA, 19406 (with copies to the Director, Office of Enforcement and to the Assistant General Counsel for Materials Litigation and Enforcement, U.S. Nuclear Regulatory Commission, Washington, DC 20555–0001), within 30 days of the date of this Demand for Information, the following information, in writing, and under oath or affirmation:

1. Information regarding whether communications over the past five years to the NRC by the aforementioned employees that were material to NRC-regulated activities were complete and accurate, and the basis for that conclusion. The communications shall include, but not be limited to, required reports to the NRC, interactions with NRC inspection staff, and submittals to support NRC licensing decisions, including the license renewal process. The information shall also describe any impacts on safety and security for any communications to the NRC found to be incomplete or inaccurate.

2. Any corrective actions or compensatory measures taken or planned to address any incomplete or inaccurate communications provided to the NRC by the aforementioned employees identified by your review conducted in response to Item 1.

3. A description of how, in light of the organizational changes made in response to the independent internal investigation, Entergy is providing for appropriate implementation of NRC-regulated programs (*e.g.,* Regulatory Licensing, Security, Emergency Preparedness, *etc.*)

4. A description of how Entergy is identifying and responding to any adverse implications to the Vermont Yankee site safety culture as a result of this investigation, its findings, and the actions taken regarding the aforementioned employees.

5. Confirmation that Entergy intends to make the independent internal investigation available to the NRC to allow the NRC to independently evaluate Entergy's investigation for any impact on NRC-regulated activities.

The Director, Office of Enforcement, may relax or rescind any of these items for good cause shown.

**V**

After reviewing your response, the NRC will determine whether further action is necessary to ensure compliance with regulatory requirements.

Dated at Rockville, Maryland, this 1st day of March, 2010.

For the Nuclear Regulatory Commission.

**Roy P. Zimmerman,**

*Director, Office of Enforcement.*

[FR Doc. 2010–4934 Filed 3–8–10; 8:45 am]

**BILLING CODE 7590–01–P**

---

## NUCLEAR REGULATORY COMMISSION

**[Docket No. 50–397; NRC–2010–0084]**

## Energy Northwest; Columbia Generating Station; Environmental Assessment and Finding of No Significant Impact

The U.S. Nuclear Regulatory Commission (NRC) is considering issuance of an exemption, pursuant to Title 10 of the Code of Federal Regulations (10 CFR) Section 73.5, "Specific exemptions," from the implementation date for one new requirement of 10 CFR part 73, "Physical protection of plants and materials," for Facility Operating License No. DPR–46, issued to Energy Northwest (the licensee), for operation of the Columbia Generating Station (CGS), located in Benton County, Washington. Therefore, as required by 10 CFR 51.21, the NRC performed an environmental assessment. Based on the results of the environmental assessment, the NRC is issuing a finding of no significant impact.

### Environmental Assessment

*Identification of the Proposed Action*

The proposed action would exempt Energy Northwest from the required implementation date of March 31, 2010, for one new requirement of 10 CFR part 73. Specifically, Energy Northwest would be granted an exemption from being in full compliance with a new requirement contained in 10 CFR 73.55 by the March 31, 2010, deadline. Energy Northwest has proposed an alternate full compliance implementation date of May 15, 2010, 45 days beyond the date required by 10 CFR part 73. The proposed action, an extension of the schedule for completion of one action required by the revised 10 CFR part 73, does not involve any physical changes to the reactor, fuel, plant structures, support structures, water, or land at the Energy Northwest site.

The proposed action is in accordance with the licensee's application dated January 27, 2010.

*The Need for the Proposed Action*

The proposed action is needed to provide the licensee with additional time to perform the required upgrades to the Energy Northwest security system due to manufacturing delays of one item at the vendor.

*Environmental Impacts of the Proposed Action*

The NRC has completed its environmental assessment of the proposed exemption. The staff has concluded that the proposed action to extend the implementation deadline would not significantly affect plant safety and would not have a significant adverse effect on the probability of an accident occurring.

The proposed action would not result in an increased radiological hazard beyond those previously analyzed in the environmental assessment and finding of no significant impact made by the Commission in promulgating its revisions to 10 CFR part 73 as discussed in a **Federal Register** notice dated March 27, 2009 (74 FR 13926). There will be no change to radioactive effluents that affect radiation exposures to plant workers and members of the public. Therefore, no changes or different types of radiological impacts are expected as a result of the proposed exemption.

The proposed action does not result in changes to land use or water use, or result in changes to the quality or quantity of non-radiological effluents. No changes to the National Pollution Discharge Elimination System permit are needed. No effects on the aquatic or terrestrial habitat in the vicinity of the plant, or to threatened, endangered, or protected species under the Endangered Species Act, or impacts to essential fish habitat covered by the Magnuson-

Steven's Act are expected. There are no impacts to the air or ambient air quality.

There are no impacts to historical and cultural resources. There would be no impact to socioeconomic resources. Therefore, no changes to or different types of non-radiological environmental impacts are expected as a result of the proposed exemption.

Accordingly, the NRC concludes that there are no significant environmental impacts associated with the proposed action. In addition, in promulgating its revisions to 10 CFR part 73, the Commission prepared an environmental assessment and published a finding of no significant impact [Part 73, Power Reactor Security Requirements, 74 FR 13926 (March 27, 2009)].

The NRC staff's safety evaluation will be provided in the exemption that will be issued as part of the letter to the licensee approving the exemption to the regulation, if granted.

*Environmental Impacts of the Alternatives to the Proposed Action*

As an alternative to the proposed actions, the NRC staff considered denial of the proposed action (*i.e.,* the "no-action" alternative). Denial of the exemption request would result in no change in current environmental impacts. If the proposed action was denied, the licensee would have to comply with the March 31, 2010, implementation deadline. The environmental impacts of the proposed exemption and the "no-action" alternative are similar.

*Alternative Use of Resources*

The action does not involve the use of any different resources than those considered in the Final Environmental Statement for CGS dated December 1981.

*Agencies and Persons Consulted*

In accordance with its stated policy, on February 1, 2010, the NRC staff consulted with the Washington State official, Mr. R. Cowley of the Office of Radiation Protection, regarding the environmental impact of the proposed action. The State official had no comments.

**Finding of No Significant Impact**

On the basis of the environmental assessment, the NRC concludes that the proposed action will not have a significant effect on the quality of the human environment. Accordingly, the NRC has determined not to prepare an environmental impact statement for the proposed action.

For further details with respect to the proposed action, see the licensee's letter dated January 27, 2010. Portions of the document contain security-related information and, accordingly, are not available to the public. Other parts of the document may be examined, and/or copied for a fee, at the NRC's Public Document Room (PDR), located at One White Flint North, Room O–1 F21, 11555 Rockville Pike (first floor), Rockville, Maryland 20852. Publicly available records will be accessible electronically from the Agencywide Documents Access and Management System (ADAMS) Public Electronic Reading Room on the Internet at the NRC Web site, *http://www.nrc.gov/reading-rm/adams.html.* Persons who do not have access to ADAMS or who encounter problems in accessing the documents located in ADAMS should contact the NRC PDR Reference staff by telephone at 1–800–397–4209 or 301–415–4737, or send an e-mail to *pdr.resource@nrc.gov.*

Dated at Rockville, Maryland, this 25th day of February 2010.

For the Nuclear Regulatory Commission.

**Lynnea E. Wilkins,**

*Project Manager, Plant Licensing Branch IV, Division of Operating Reactor Licensing, Office of Nuclear Reactor Regulation.*

[FR Doc. 2010–4676 Filed 3–8–10; 8:45 am]

BILLING CODE 7590–01–P

---

## NUCLEAR REGULATORY COMMISSION

**[Docket No. 50–285; NRC–2010–0087]**

## Omaha Public Power District, Fort Calhoun Station, Unit 1, Environmental Assessment and Finding of No Significant Impact

The U.S. Nuclear Regulatory Commission (NRC) is considering issuance of an exemption, pursuant to Title 10 of the *Code of Federal Regulations* (10 CFR) Section 73.5, "Specific exemptions," from the implementation date for certain new requirements of 10 CFR part 73, "Physical protection of plants and materials," for Renewed Facility Operating License No. DPR–40, issued to Omaha Public Power District (OPPD, the licensee), for operation of Fort Calhoun Station, Unit 1 (FCS), located in Washington County, Nebraska. Therefore, as required by 10 CFR 51.21, the NRC performed an environmental assessment. Based on the results of the environmental assessment, the NRC is issuing a finding of no significant impact.

**Environmental Assessment**

*Identification of the Proposed Action*

The proposed action would exempt FCS from the required implementation date of March 31, 2010, for several new requirements of 10 CFR part 73. Specifically, FCS would be granted an exemption from being in full compliance with certain new requirements contained in 10 CFR 73.55 by the March 31, 2010, deadline. OPPD has proposed an alternate full compliance implementation date of October 5, 2011, approximately 19 months beyond the date required by 10 CFR part 73. The proposed action, an extension of the schedule for completion of certain actions required by the revised 10 CFR part 73, does not involve any physical changes to the reactor, fuel, plant structures, support structures, water, or land at the FCS site.

The proposed action is in accordance with the licensee's application dated December 31, 2009, as supplemented by letter dated January 21, 2010.

*The Need for the Proposed Action*

The proposed action is needed to provide the licensee with additional time to perform the required upgrades to the FCS security system due to the time required for significant design, procurement, and installation activities needed to implement the required upgrades.

*Environmental Impacts of the Proposed Action*

The NRC has completed its environmental assessment of the proposed exemption. The staff has concluded that the proposed action to extend the implementation deadline would not significantly affect plant safety and would not have a significant adverse effect on the probability of an accident occurring.

The proposed action would not result in an increased radiological hazard beyond those previously analyzed in the environmental assessment and finding of no significant impact made by the Commission in promulgating its revisions to 10 CFR part 73 as discussed in a **Federal Register** notice dated March 27, 2009 (74 FR 13926). There will be no change to radioactive effluents that affect radiation exposures to plant workers and members of the public. Therefore, no changes or different types of radiological impacts are expected as a result of the proposed exemption.

The proposed action does not result in changes to land use or water use, or result in changes to the quality or quantity of non-radiological effluents.

No changes to the National Pollution Discharge Elimination System permit are needed. No effects on the aquatic or terrestrial habitat in the vicinity of the plant, or to threatened, endangered, or protected species under the Endangered Species Act, or impacts to essential fish habitat covered by the Magnuson-Steven's Act are expected. There are no impacts to the air or ambient air quality. There are no impacts to historical and cultural resources. There would be no impact to socioeconomic resources. Therefore, no changes to or different types of non-radiological environmental impacts are expected as a result of the proposed exemption.

Accordingly, the NRC concludes that there are no significant environmental impacts associated with the proposed action. In addition, in promulgating its revisions to 10 CFR part 73, the Commission prepared an environmental assessment and published a finding of no significant impact [Part 73, Power Reactor Security Requirements, 74 FR 13926 (March 27, 2009)].

The NRC staff's safety evaluation will be provided in the exemption that will be issued as part of the letter to the licensee approving the exemption to the regulation, if granted.

*Environmental Impacts of the Alternatives to the Proposed Action*

As an alternative to the proposed actions, the NRC staff considered denial of the proposed actions (*i.e.,* the "no-action" alternative). Denial of the exemption request would result in no change in current environmental impacts. If the proposed action was denied, the licensee would have to comply with the March 31, 2010, implementation deadline. The environmental impacts of the proposed exemption and the "no-action" alternative are similar.

*Alternative Use of Resources*

The action does not involve the use of any different resources than those considered in the Final Environmental Statement for the FCS dated August 1972, as supplemented through the "Generic Environmental Impact Statement for License Renewal of Nuclear Plants: Fort Calhoun Station Unit 1—Final Report (NUREG–1437, Supplement 12)."

*Agencies and Persons Consulted*

In accordance with its stated policy, on February 4, 2010, the NRC staff consulted with the Nebraska State official, Julia Schmitt, of the Department of Health and Human Services Regulation and Licensure, regarding the environmental impact of the proposed action. The State official had no comments.

*Finding of No Significant Impact*

On the basis of the environmental assessment, the NRC concludes that the proposed action will not have a significant effect on the quality of the human environment. Accordingly, the NRC has determined not to prepare an environmental impact statement for the proposed action.

For further details with respect to the proposed action, see the licensee's letter dated December 31, 2009, as supplemented by letter dated January 21, 2010. The January 21, 2010, submittal and portions of the December 31, 2009, submittal contain security-related information and, accordingly, are exempt from public disclosure. Other parts of the December 31, 2009, document may be examined, and/or copied for a fee, at the NRC's Public Document Room (PDR), located at One White Flint North, Room O–1 F21, 11555 Rockville Pike (first floor), Rockville, Maryland 20852. Publicly available records will be accessible electronically from the Agencywide Documents Access and Management System (ADAMS) Public Electronic Reading Room on the Internet at the NRC Web site: *http://www.nrc.gov/reading-rm/adams.html.*

Persons who do not have access to ADAMS or who encounter problems in accessing the documents located in ADAMS should contact the NRC PDR Reference staff by telephone at 1–800–397–4209 or 301–415–4737, or send an e-mail to *pdr.resource@nrc.gov.*

Dated at Rockville, Maryland, this 2nd day of March 2010.

For the Nuclear Regulatory Commission.

**Lynnea Wilkins,**

*Project Manager, Plant Licensing Branch IV, Division of Operating Reactor Licensing, Office of Nuclear Reactor Regulation.*

[FR Doc. 2010–4940 Filed 3–8–10; 8:45 am]

**BILLING CODE 7590–01–P**

---

## NUCLEAR REGULATORY COMMISSION

**[Docket Nos. 50–334 And 50–412; NRC–2010–0049]**

## Firstenergy Nuclear Operating Company, Firstenergy Nuclear Generation Corp., Ohio Edison Company, the Toledo Edison Company, Beaver Valley Power Station, Unit Nos. 1 And 2; Exemption

### 1.0 Background

FirstEnergy Nuclear Operating Company (licensee) is the holder of Facility Operating License Nos. DPR–66 and NPF–73, which authorizes operation of the Beaver Valley Power Station, Unit Nos. 1 and 2 (BVPS–1 and 2). The license provides, among other things, that the facility is subject to all rules, regulations, and orders of the Nuclear Regulatory Commission (NRC, the Commission) now or hereafter in effect. The facility consists of two pressurized-water reactors located in Beaver County, Pennsylvania.

### 2.0 Request/Action

Title 10 of the Code of Federal Regulations (10 CFR), Part 73, "Physical protection of plants and materials," Section 73.55, "Requirements for physical protection of licensed activities in nuclear power reactors against radiological sabotage," published March 27, 2009, effective May 26, 2009, with a full implementation date of March 31, 2010, requires licensees to protect, with high assurance, against radiological sabotage by designing and implementing comprehensive site security plans. The amendments to 10 CFR 73.55 published on March 27, 2009, establish and update generically applicable security requirements similar to those previously imposed by Commission orders issued after the terrorist attacks of September 11, 2001, and implemented by licensees. In addition, the amendments to 10 CFR 73.55 include additional requirements to further enhance site security, based upon insights gained from implementation of the post September 11, 2001 security orders. It is from one of these new requirements that BVPS–1 and 2 now seeks an exemption from the March 31, 2010 implementation date. All other physical security requirements established by this recent rulemaking have already been or will be implemented by the licensee by March 31, 2010.

By letter dated November 30, 2009, as supplemented by letter dated December 23, 2009, the licensee requested an exemption in accordance with 10 CFR 73.5, "Specific exemptions." The licensee's letters contain security information and, accordingly, those portions are not available to the public. The licensee has requested an exemption from the March 31, 2010, compliance date stating that a number of issues will present a significant challenge to timely completion of the project related to a specific requirement in 10 CFR Part 73. The request is to extend the compliance date for one specific requirement from the current March 31, 2010, deadline to December 17, 2010. Being granted this exemption for the extension would allow the

licensee to design the necessary modifications, procure equipment and material, and implement upgrades to meet the noted regulatory requirement.

**3.0 Discussion of Part 73 Schedule Exemptions from the March 31, 2010, Full Implementation Date**

Pursuant to 10 CFR 73.55(a)(1), "By March 31, 2010, each nuclear power reactor licensee, licensed under 10 CFR Part 50, shall implement the requirements of this section through its Commission-approved Physical Security Plan, Training and Qualification Plan, Safeguards Contingency Plan, and Cyber Security Plan referred to collectively hereafter as 'security plans.'" Pursuant to 10 CFR 73.5, the Commission may, upon application by any interested person or upon its own initiative, grant exemptions from the requirements of 10 CFR Part 73 when the exemptions are authorized by law, and will not endanger life or property or the common defense and security, and are otherwise in the public interest.

NRC approval of this exemption, as noted above, would allow an extension from March 31, 2010, to December 17, 2010, for the implementation date for one specific requirement of the new rule. The NRC staff has determined that granting the licensee's proposed exemption would not result in a violation of the Atomic Energy Act of 1954, as amended, or the Commission's regulations. Therefore, the NRC approval of the licensee's exemption request is authorized by law.

In the draft final rule provided to the Commission (SECY–08–0099 dated July 9, 2008), the NRC staff proposed that the requirements of the new regulation be met within 180 days. The Commission directed a change from 180 days to approximately 1 year for licensees to fully implement the new requirements. This change was incorporated into the final rule. From this, it is clear that the Commission wanted to provide a reasonable timeframe for licensees to achieve full compliance.

As noted in the final rule, the Commission also anticipated that licensees would have to conduct site specific analyses to determine what changes were necessary to implement the rule's requirements, and that changes could be accomplished through a variety of licensing mechanisms, including exemptions. Since issuance of the final rule, the Commission has rejected a generic industry request to extend the rule's compliance date for all operating nuclear power plants, but noted that the Commission's regulations provide mechanisms for individual licensees, with good cause, to apply for relief from the compliance date (Reference: June 4, 2009, letter from R. W. Borchardt, NRC, to M. S. Fertel, Nuclear Energy Institute). The licensee's request for an exemption is therefore consistent with the approach set forth by the Commission and discussed in the June 4, 2009, letter.

*BVPS–1 and 2 Schedule Exemption Request*

The licensee provided detailed information in its letter dated November 30, 2009, as supplemented December 23, 2009, requesting an exemption. It describes a comprehensive plan to design the necessary modifications, procure equipment and material, and implement upgrades to comply with a specific aspect of 10 CFR 73.55 and provides a timeline for achieving full compliance with the new regulation. The submittals contain security information regarding the site security plan, details of the specific requirement of the regulation for which the site cannot be in compliance by the March 31, 2010, deadline and why, the required changes to the site's security configuration, and a timeline with critical path activities that would allow the licensee to achieve full compliance by December 17, 2010. The timeline provides dates indicating (1) when various phases of the project begin and end (*i.e.,* design, field construction), (2) outages scheduled for each unit, and (3) when critical equipment will be ordered, installed, tested and become operational.

The licensee currently maintains a security program acceptable to the NRC and the new 10 CFR Part 73 security measures that will be implemented by March 31, 2010, will continue to provide acceptable physical protection of BVPS–1 and 2 during the requested extension period.

Notwithstanding the schedular exemptions for these limited requirements, the licensee will continue to be in compliance with all other applicable physical security requirements as described in 10 CFR 73.55 and reflected in its current NRC approved physical security program. By December 17, 2010, BVPS–1 and 2 will be in full compliance with all the regulatory requirements of 10 CFR 73.55, as issued on March 27, 2009.

**4.0 Conclusion for Part 73 Schedule Exemption Request**

The NRC staff has reviewed the licensee's submittals and concludes that the licensee has provided adequate justification for its request for an extension of the compliance date to December 17, 2010, with regard to the specified requirement of 10 CFR 73.55.

Accordingly, the Commission has determined that pursuant to 10 CFR 73.5, "Specific exemptions," an exemption from the March 31, 2010, compliance date is authorized by law and will not endanger life or property or the common defense and security, and is otherwise in the public interest. Therefore, the Commission hereby grants the requested exemption.

The NRC staff has determined that the long-term benefits that will be realized when the BVPS–1 and 2 equipment installation is complete justifies extending the full compliance date with regard to the specified requirement of 10 CFR 73.55. The security measures, BVPS–1 and 2 need additional time to implement, are new requirements imposed by March 27, 2009, amendments to 10 CFR 73.55, and are in addition to those required by the security orders issued in response to the events of September 11, 2001. Therefore, it is concluded that the licensee's actions are in the best interest of protecting the public health and safety through the security changes that will result from granting this exemption.

As per the licensee's request and the NRC's regulatory authority to grant an exemption from the March 31, 2010, implementation deadline for the requirement specified in the licensee's letter dated November 30, 2009, as supplemented December 23, 2009, the licensee is required to be in full compliance by December 17, 2010. In achieving compliance, the licensee is reminded that it is responsible for determining the appropriate licensing mechanism (i.e., 10 CFR 50.54(p) or 10 CFR 50.90) for incorporation of all necessary changes to its security plans.

Pursuant to 10 CFR 51.32, "Finding of no significant impact," the Commission has previously determined that the granting of this exemption will not have a significant effect on the quality of the human environment 75 FR 6736; dated February 10, 2010.

This exemption is effective upon issuance.

Dated at Rockville, Maryland, this 1st day of March 2010.

For the Nuclear Regulatory Commission.

**Joseph G. Giitter,**

*Director, Division of Operating Reactor Licensing, Office of Nuclear Reactor Regulation.*

[FR Doc. 2010–4944 Filed 3–8–10; 8:45 am]

BILLING CODE 7590–01–P

## NUCLEAR REGULATORY COMMISSION

**[Docket Nos. 50–275 and 50–323; NRC–2010–0059]**

## Pacific Gas and Electric Company; Diablo Canyon Power Plant; Exemption

### 1.0 Background

Pacific Gas and Electric Company (PG&E, the licensee) is the holder of Facility Operating License Nos. DPR–80 and DPR–82, which authorize operation of the Diablo Canyon Power Plant, Units Nos. 1 and 2 (DCPP). The licenses provide, among other things, that the facility is subject to all rules, regulations, and orders of the U.S. Nuclear Regulatory Commission (NRC, the Commission) now or hereafter in effect.

The facility consists of two pressurized-water reactors located in San Luis Obispo County, California.

### 2.0 Request/Action

Title 10 of the Code of Federal Regulations (10 CFR) Part 73, "Physical protection of plants and materials," Section 73.55, "Requirements for physical protection of licensed activities in nuclear power reactors against radiological sabotage," published in the **Federal Register** on March 27, 2009, effective May 26, 2009, with a full implementation date of March 31, 2010, requires licensees to protect, with high assurance, against radiological sabotage by designing and implementing comprehensive site security programs. The amendments to 10 CFR 73.55 published on March 27, 2009, establish and update generically applicable security requirements similar to those previously imposed by Commission orders issued after the terrorist attacks on September 11, 2001, and implemented by the licensees. In addition, the amendments to 10 CFR 73.55 include additional requirements to further enhance site security based upon insights gained from implementation of the post September 11, 2001, security orders. It is from two of these additional requirements that PG&E now seeks an exemption from the March 31, 2010, implementation date. All other physical security requirements established by this recent rulemaking have already been or will be implemented by the licensee by March 31, 2010.

By letter dated December 4, 2009, the licensee requested an exemption in accordance with 10 CFR 73.5, "Specific exemptions." Portions of the December 4, 2009, submittal contain security-related and safeguards information and, accordingly, a redacted version of the December 4, 2009, letter was submitted by the licensee on January 22, 2010 (Agencywide Documents Access and Management System (ADAMS) Accession No. ML100270050). This non-proprietary version is available to the public. The licensee has requested an exemption from the March 31, 2010, compliance date stating that a number of issues will present a significant challenge to the timely completion of the projects related to certain specific requirements in 10 CFR 73. Specifically, the request is to extend the compliance date from the March 31, 2010, deadline to June 30, 2011. Granting this exemption for the two items would allow the licensee to complete the modifications designed to update aging equipment and incorporate state-of-the-art technology to meet the noted regulatory requirements.

### 3.0 Discussion of Part 73 Schedule Exemptions From the March 31, 2010, Full Implementation Date

Pursuant to 10 CFR 73.55(a)(1), "By March 31, 2010, each nuclear power reactor licensee, licensed under 10 CFR Part 50, shall implement the requirements of this section through its Commission-approved Physical Security Plan, Training and Qualification Plan, Safeguards Contingency Plan, and Cyber Security Plan referred to collectively hereafter as 'security plans.'" Pursuant to 10 CFR 73.5, the Commission may, upon application by any interested person or upon its own initiative, grant exemptions from the requirements of 10 CFR Part 73 when the exemptions are authorized by law, and will not endanger life or property or the common defense and security, and are otherwise in the public interest.

NRC approval of this exemption, as noted above, would allow an extension from March 31, 2010, until June 30, 2011, of the implementation date for two specific requirements of the new rule. As stated above, 10 CFR 73.5 allows the NRC to grant exemptions from the requirements of 10 CFR Part 73. The NRC staff has determined that granting of the licensee's proposed exemption would not result in a violation of the Atomic Energy Act of 1954, as amended, or the Commission's regulations. Therefore, the exemption is authorized by law.

In the draft final rule provided to the Commission, the NRC staff proposed that the requirements of the new regulation be met within 180 days. The Commission directed a change from 180 days to approximately 1 year for licensees to fully implement the new requirements. This change was incorporated into the final rule. From this, it is clear that the Commission wanted to provide a reasonable timeframe for licensees to achieve full compliance.

As noted in the final rule, the Commission also anticipated that licensees would have to conduct site specific analyses to determine what changes were necessary to implement the rule's requirements, and that changes could be accomplished through a variety of licensing mechanisms, including exemptions. Since issuance of the final rule, the Commission has rejected a generic industry request to extend the rule's compliance date for all operating nuclear power plants, but noted that the Commission's regulations provide mechanisms for individual licensees, with good cause, to apply for relief from the compliance date as documented in a letter from R. W. Borchardt, (NRC), to M. S. Fertel, (Nuclear Energy Institute) dated June 4, 2009. The licensee's request for an exemption is therefore consistent with the approach set forth by the Commission and discussed in the June 4, 2009, letter.

*DCPP Schedule Exemption Request*

The licensee provided detailed information in Enclosure 1 to its application dated December 4, 2009, letter requesting an exemption. In that letter, the licensee describes a comprehensive plan to study, design, construct, test, and turn over the new equipment for the enhancement of the security capabilities at the DCPP site and provides a timeline for achieving full compliance with the new regulation. Enclosure 1 of the application dated December 4, 2009, contains security-related and safeguards information regarding the site security plan, details of the specific requirements of the regulation for which the site cannot achieve compliance by the March 31, 2010, deadline, justification for the extension request, a description of the required changes to the site's security configuration, and a timeline with critical path activities that would bring the licensee into full compliance by June 30, 2011. The timeline provides dates indicating when (1) Construction will begin on various phases of the project (i.e., new roads, buildings, and fences), (2) outages are scheduled for each unit, and (3) critical equipment will be ordered, installed, tested and become operational.

Notwithstanding the scheduler exemptions for these limited requirements, the licensee will continue to be in compliance with all other

applicable physical security requirements as described in 10 CFR 73.55 and reflected in its current NRC approved physical security program. By June 30, 2011, DCPP will be in full compliance with the regulatory requirements of 10 CFR 73.55, as issued on March 27, 2009.

### 4.0 Conclusion for Part 73 Schedule Exemption Request

The staff has reviewed the licensee's submittals and concludes that the licensee has provided adequate justification for its request for an extension of the compliance date to June 30, 2011 for two specified requirements.

Accordingly, the Commission has determined that pursuant to 10 CFR 73.5, "Specific exemptions," an exemption from the March 31, 2010, compliance date is authorized by law and will not endanger life or property or the common defense and security, and is otherwise in the public interest. Therefore, the Commission hereby grants the requested exemption.

The NRC staff has determined that the long-term benefits that will be realized when the DCPP security modifications are complete justifies exceeding the full compliance date with regard to the specified requirements of 10 CFR 73.55. The significant security enhancements DCPP needs additional time to complete are new requirements imposed by March 27, 2009 amendments to 10 CFR 73.55, and are in addition to those required by the security orders issued in response to the events of September 11, 2001. Therefore, the NRC concludes that the licensee's actions are in the best interest of protecting the public health and safety through the security changes that will result from granting this exemption.

As per the licensee's request and the NRC's regulatory authority to grant an exemption from the March 31, 2010, deadline for the two items specified in Enclosure 1 of PG&E letter dated December 4, 2009, the licensee is required to be in full compliance by June 30, 2011. In achieving compliance, the licensee is reminded that it is responsible for determining the appropriate licensing mechanism (i.e., 10 CFR 50.54(p) or 10 CFR 50.90) for incorporation of all necessary changes to its security plans.

Pursuant to 10 CFR 51.32, "Finding of no significant impact," the Commission has previously determined that the granting of this exemption will not have a significant effect on the quality of the human environment (75 FR 8152; dated February 23, 2010).

This exemption is effective upon issuance.

Dated at Rockville, Maryland, this 2nd day of March 2010.

For the Nuclear Regulatory Commission.

**Joseph G. Giitter,**

*Director, Division of Operating Reactor Licensing, Office of Nuclear Reactor Regulation.*

[FR Doc. 2010–4937 Filed 3–8–10; 8:45 am]

BILLING CODE 7590–01–P

---

## NUCLEAR REGULATORY COMMISSION

**[Docket No. 50–395; NRC–2010–0067]**

## South Carolina Electric and Gas Company; Virgil C. Summer Nuclear Station, Unit 1; Exemption

### 1.0 Background

South Carolina Electric and Gas Company, (SCE&G, the licensee) is the holder of Facility Operating License No. NPF–12, which authorizes operation of the Virgil C. Summer Nuclear Station, Unit 1 (VCSNS). The license provides, among other things, that the facility is subject to all rules, regulations, and orders of the U.S. Nuclear Regulatory Commission (NRC, the Commission) now or hereafter in effect.

The facility consists of a pressurized water reactor located in Fairfield County, South Carolina.

### 2.0 Request/Action

Title 10 of the Code of Federal Regulations (10 CFR) Part 73, "Physical protection of plants and materials," section 73.55, "Requirements for physical protection of licensed activities in nuclear power reactors against radiological sabotage," published March 27, 2009, effective May 26, 2009, with a full implementation date of March 31, 2010, requires licensees to protect, with high assurance, against radiological sabotage by designing and implementing comprehensive site security plans. The amendments to 10 CFR 73.55 published on March 27, 2009, establish and update generically applicable security requirements similar to those previously imposed by Commission orders issued after the terrorist attacks of September 11, 2001, and implemented by licensees. In addition, the amendments to 10 CFR 73.55 include additional requirements to further enhance site security based upon insights gained from implementation of the post September 11, 2001, security orders. It is from two of these new requirements that VCSNS now seeks an exemption from the March 31, 2010, implementation date. All other physical security requirements established by this recent rulemaking have already been or will be implemented by the licensee by March 31, 2010.

On December 11, 2009, the licensee submitted two letters, SCE&G designation RC–09–0154 (NRC ADAMS ML093490316) and RC–09–0148 (NRC ADAMS ML093480496 and ML093480497), requesting an exemption in accordance with 10 CFR 73.5, "Specific exemptions." SCE&G's letter RC–09–0148, contains security-related information and, accordingly, is not available to the public. SCE&G's letter RC–09–0154 is a redacted version of RC–09–0148 that does not contain security related information. The licensee has requested an exemption from the March 31, 2010, compliance date for two provisions of the revised 10 CFR Part 73, stating that the scope of work necessary to complete these two provisions would require a schedule going past the March 31, 2010, implementation date in the revised 10 CFR Part 73. Specifically, the request is to extend the compliance date for two specific requirements from the current March 31, 2010 deadline to September 30, 2010. Being granted this exemption for the two items would allow the licensee to complete the study, design, planning, procurement, construction, testing, and project closeout for the two areas on a schedule that will allow adherence to the licensee's design control and work control processes.

### 3.0 Discussion of Part 73 Schedule Exemptions from the March 31, 2010, Full Implementation Date

Pursuant to 10 CFR 73.55(a)(1), "By March 31, 2010, each nuclear power reactor licensee, licensed under 10 CFR Part 50, shall implement the requirements of this section through its Commission-approved Physical Security Plan, Training and Qualification Plan, Safeguards Contingency Plan, and Cyber Security Plan referred to collectively hereafter as 'security plans.'" Pursuant to 10 CFR 73.5, the Commission may, upon application by any interested person or upon its own initiative, grant exemptions from the requirements of 10 CFR Part 73 when the exemptions are authorized by law, and will not endanger life or property or the common defense and security, and are otherwise in the public interest.

NRC approval of this exemption would, as noted above, allow an extension from March 31, 2010, until September 30, 2010, for the implementation date for two specific requirements of the new rule. The NRC staff has determined that granting of the licensee's proposed exemption would not result in a violation of the Atomic

Energy Act of 1954, as amended, or the Commission's regulations. Therefore, the exemption is authorized by law.

In the draft final rule provided to the Commission, (SECY–08–0099, dated July 9, 2008), the NRC staff proposed that the requirements of the new regulation be met within 180 days. The Commission directed a change from 180 days to approximately 1 year for licensees to fully implement the new requirements. This change was incorporated into the final rule. From this, it is clear that the Commission wanted to provide a reasonable timeframe for licensees to achieve full compliance.

As noted in the final rule, the Commission also anticipated that licensees would have to conduct site specific analyses to determine what changes were necessary to implement the rule's requirements, and that changes could be accomplished through a variety of licensing mechanisms, including exemptions. Since issuance of the final rule, the Commission has rejected a generic industry request to extend the rule's compliance date for all operating nuclear power plants, but noted that the Commission's regulations provide mechanisms for individual licensees, with good cause, to apply for relief from the compliance date (Reference: June 4, 2009, letter from R. W. Borchardt, NRC, to M. S. Fertel, Nuclear Energy Institute). The licensee's request for an exemption is therefore consistent with the approach set forth by the Commission as discussed in the June 4, 2009, letter.

*VCSNS Schedule Exemption Request*

The licensee provided detailed information in Enclosures 1 and 2 and attachment 1 (NRC ADAMS ML 093480496) of its letter dated December 11, 2009 (RC–09–0148), requesting an exemption. It describes a plan that proceeds from the now completed study phase to the major activities of design development of the engineering change request package to support the activities necessary for full compliance with part 73. These activities include the required plant modifications; design development of custom computer software; detailed field planning; work document development; schedule integration including integration of the new equipment with the existing security system; material procurement; field implementation of the required plant modifications including installation of fiber optic cables, large and small diameter conduit and distribution boxes; connections to the computer system; and project closeout. SCE&G has also provided a timeline for achieving full compliance with the new regulation that shows the design, planning procurement, construction, testing, and project closeout activities. SCE&G stated that the project schedule takes into consideration the logistical efforts required to maintain the current defensive strategy while implementing the security system upgrade. SCE&G's letter (RC–09–0148) and its Enclosures 1 and 2 and Attachment 1 (ADAMS ML093480496 and ML093480497) contains security-related information regarding the site security issues, details of specific portions of the new regulation with which SCE&G cannot be in compliance by the March 31, 2010, deadline, why the required changes to the VCSNS security configuration could not be completed by March 31, 2010, and a timeline with critical path activities that would enable SCE&G to achieve full compliance by September 30, 2010. The timeline provides milestone dates for engineering, planning and procurement, implementation, startup and testing, engineering closeout, and project closeout.

Notwithstanding the scheduler exemptions for these limited requirements, the licensee will continue to be in compliance with all other applicable physical security requirements as described in 10 CFR 73.55 and reflected in its current NRC approved physical security program. By September 30, 2010, VCSNS will be in full compliance with all the regulatory requirements of 10 CFR 73.55, as issued on March 27, 2009.

**4.0 Conclusion for Part 73 Schedule Exemption Request**

The NRC staff has reviewed the licensee's submittals and concludes that the licensee has provided adequate justification for its request for an extension of the compliance date to September 30, 2010, with regard to two specific requirements of 10 CFR 73.55.

Accordingly, the Commission has determined that pursuant to 10 CFR 73.5, "Specific exemptions," an exemption from the March 31, 2010, compliance date is authorized by law and will not endanger life or property or the common defense and security, and is otherwise in the public interest. Therefore, the Commission hereby grants the requested exemption.

The NRC staff has determined that the long-term benefits that will be realized when the licensee's equipment installation is complete justifies extending the full compliance date with regard to the specific requirements of 10 CFR 73.55. The security measures, that SCE&G needs additional time to implement, are new requirements imposed by the March 27, 2009, amendments to 10 CFR 73.55, and are in addition to those required by the security orders issued in response to the events of September 11, 2001. Therefore, it is concluded that the licensee's actions are in the best interest of protecting the public health and safety through the security changes that will result from granting this exemption.

As per the licensee's request and the NRC's regulatory authority to grant an exemption from the March 31, 2010, implementation deadline for the two requirements specified in the licensee's two letters dated December 11, 2009, the licensee is required to be in full compliance by September 30, 2010. In achieving compliance, the licensee is reminded that it is responsible for determining the appropriate licensing mechanism (i.e., 10 CFR 50.54(p) or 10 CFR 50.90) for incorporation of all necessary changes to its security plans.

Pursuant to 10 CFR 51.32, "Finding of no significant impact," the Commission has previously determined that the granting of this exemption will not have a significant effect on the quality of the human environment 75 FR 8756; dated February 25, 2010.

This exemption is effective upon issuance.

Dated at Rockville, Maryland, this 1st day of March, 2010.

For the Nuclear Regulatory Commission.

**Joseph G. Giitter,**

*Director, Division of Operating Reactor Licensing, Office of Nuclear Reactor Regulation.*

[FR Doc. 2010–4935 Filed 3–8–10; 8:45 am]

BILLING CODE 7590–01–P

## NUCLEAR REGULATORY COMMISSION

### Advisory Committee on Reactor Safeguards (ACRS) Meeting of the Subcommittee on Advanced Boiling Water Reactor (ABWR); Notice of Meeting

The ACRS Subcommittee on ABWR will hold a meeting on March 18, 2010, at 11545 Rockville Pike, Rockville, Maryland, Room T2 B3.

The meeting will be open to public attendance, with the exception of a portion that may be closed to protect information that is proprietary to the South Texas Project (STP), pursuant to 5 U.S.C. 552b(c)(4).

The agenda for the subject meeting shall be as follows:

*March 18, 2010–8:30 a.m.–5 p.m.*

The Subcommittee will review selected chapters (5, 8, 16, and 17) of

the Safety Evaluation Report with Open Items associated with the STP Combined License Application. The Subcommittee will gather information, analyze relevant issues and facts, and formulate proposed positions and actions, as appropriate, for deliberation by the Full Committee.

Members of the public desiring to provide oral statements and/or written comments should notify the Designated Federal Official (DFO), Maitri Banerjee (Telephone: 301–415–6973, E-mail: *Maitri.Banerjee@nrc.gov*) five days prior to the meeting, if possible, so that appropriate arrangements can be made. Thirty-five hard copies of each presentation or handout should be provided to the DFO thirty minutes before the meeting. In addition, one electronic copy of each presentation should be emailed to the DFO one day before the meeting. If an electronic copy cannot be provided within this timeframe, presenters should provide the DFO with a CD containing each presentation at least thirty minutes before the meeting. Electronic recordings will be permitted only during those portions of the meeting that are open to the public. Detailed procedures for the conduct of and participation in ACRS meetings were published in the **Federal Register** on October 14, 2009, (74 FR 58268–58269).

Detailed meeting agendas and meeting transcripts are available on the NRC Web site at *http://www.nrc.gov/reading-rm/doc-collections/acrs.* Information regarding topics to be discussed, changes to the agenda, whether the meeting has been canceled or rescheduled, and the time allotted to present oral statements can be obtained from the Web site cited above or by contacting the identified DFO. Moreover, in view of the possibility that the schedule for ACRS meetings may be adjusted by the Chairman as necessary to facilitate the conduct of the meeting, persons planning to attend should check with these references if such rescheduling would result in major inconvenience.

Dated: March 3, 2010.

**Antonio F. Dias,**

*Chief, Reactor Safety Branch B, Advisory Committee on Reactor Safeguards.*

[FR Doc. 2010–4942 Filed 3–8–10; 8:45 am]

**BILLING CODE 7590–01–P**

## NUCLEAR REGULATORY COMMISSION

### Sunshine Act; Meeting Notice

**AGENCY HOLDING THE MEETINGS:** Nuclear Regulatory Commission [NRC–2010–0002].

**DATE:** Week of March 8, 2010

**PLACE:** Commissioners' Conference Room, 11555 Rockville Pike, Rockville, Maryland

**STATUS:** Public and Closed

**ADDITIONAL ITEMS TO BE CONSIDERED:**

**Week of March 8, 2010**

*Wednesday, March 10, 2010*

2 p.m. Affirmation Session (Public Meeting) (Tentative)

a. Progress Energy Carolinas, Inc. (Shearon Harris Nuclear Power Plant, Units 2 and 3), Notice of Appeal, Request for Oral Argument and Brief Supporting Notice of Appeal by NC WARN (July 22, 2009) (Tentative)

b. U.S. Department of Energy (High Level Waste Repository) Appeal of William D. Peterson (Tentative)

* * * * *

The NRC Commission Meeting Schedule can be found on the Internet at: *http://www.nrc.gov/about-nrc/policy-making/schedule.html.*

* * * * *

The NRC provides reasonable accommodation to individuals with disabilities where appropriate. If you need a reasonable accommodation to participate in these public meetings, or need this meeting notice or the transcript or other information from the public meetings in another format (e.g. braille, large print), please notify Angela Bolduc, Chief, Employee/Labor Relations and Work Life Branch, at 301–492–2230, TDD: 301–415–2100, or by e-mail at *angela.bolduc@nrc.gov*. Determinations on requests for reasonable accommodation will be made on a case-by-case basis.

* * * * *

This notice is distributed electronically to subscribers. If you no longer wish to receive it, or would like to be added to the distribution, please contact the Office of the Secretary, Washington, DC 20555 (301–415–1969), or send an email to *darlene.wright@nrc.gov*.

Dated: March 3, 2010.

**Rochelle C. Bavol,**

*Office of the Secretary.*

[FR Doc. 2010–4982 Filed 3–5–10; 1:30 pm]

**BILLING CODE 7590–01–P**

## NUCLEAR REGULATORY COMMISSION

**[NRC–2010–0002]**

### Sunshine Act; Meeting Notice

**AGENCY HOLDING THE MEETINGS:** Nuclear Regulatory Commission.

**DATES:** Weeks of March 8, 15, 22, 29, April 5, 12, 2010.

**PLACE:** Commissioners' Conference Room, 11555 Rockville Pike, Rockville, Maryland.

**STATUS:** Public and Closed.

**Week of March 8, 2010**

*Thursday, March 11, 2010*

10:30 a.m.

Affirmation Session (Public Meeting) (Tentative).

a. *Progress Energy Carolinas, Inc.* (Shearon Harris Nuclear Power Plant, Units 2 and 3), Notice of Appeal, Request for Oral Argument and Brief Supporting Notice of Appeal by NC WARN (July 22, 2009) (Tentative).

b. *U.S. Department of Energy* (High Level Waste Repository) Appeal of William D. Peterson (Tentative).

c. Final Rule: 10 CFR 51.22, "Criterion for Categorical Exclusion; Identification of Licensing and Regulatory Actions Eligible for Categorical Exclusion or Otherwise Not Requiring Environmental Review" (RIN 3150–AI27) (Tentative).

**Week of March 15, 2010—Tentative**

*Tuesday, March 16, 2010*

1:30 p.m.

Joint Meeting of the Federal Energy Regulatory Commission and the Nuclear Regulatory Commission on Grid Reliability (Public Meeting). (Contact: Kenn Miller, 301–415–3152.)

This meeting will be webcast live at the Web address—*http://www.nrc.gov*.

**Week of March 22, 2010—Tentative**

There are no meetings scheduled for the week of March 22, 2010.

**Week of March 29, 2010—Tentative**

There are no meetings scheduled for the week of March 29, 2010.

**Week of April 5, 2010—Tentative**

*Tuesday, April 6, 2010*

9 a.m.

Periodic Briefing on New Reactor Issues—Design Certifications (Public Meeting). (Contact: Amy Snyder, 301–415–6822.)

This meeting will be webcast live at the Web address—*http://www.nrc.gov.*

*Thursday, April 8, 2010*

9:30 a.m.

Briefing on Regional Programs—Programs, Performance, and Future Plans (Public Meeting). (Contact: Richard Barkley, 610–337–5065.)

This meeting will be webcast live at the Web address—*http://www.nrc.gov.*

**Week of April 12, 2010—Tentative**

There are no meetings scheduled for the week of April 12, 2010.

* The schedule for Commission meetings is subject to change on short notice. To verify the status of meetings, call (recording)—(301) 415–1292. Contact person for more information: Rochelle Bavol, (301) 415–1651.

**Additional Information**

The Briefing on Regional Programs—Programs, Performance, and Future Plans previously postponed from Tuesday, February 9, 2010, at 9:30 a.m. has been rescheduled on Thursday, April 8, 2010, at 9:30 a.m.

The NRC Commission Meeting Schedule can be found on the Internet at: *http://www.nrc.gov/about-nrc/policy-making/schedule.html.*

The NRC provides reasonable accommodation to individuals with disabilities where appropriate. If you need a reasonable accommodation to participate in these public meetings, or need this meeting notice or the transcript or other information from the public meetings in another format (*e.g.* braille, large print), please notify Angela Bolduc, Chief, Employee/Labor Relations and Work Life Branch, at 301–492–2230, TDD: 301–415–2100, or by e-mail at *angela.bolduc@nrc.gov.* Determinations on requests for reasonable accommodation will be made on a case-by-case basis.

This notice is distributed electronically to subscribers. If you no longer wish to receive it, or would like to be added to the distribution, please contact the Office of the Secretary, Washington, DC 20555 (301–415–1969), or send an e-mail to *darlene.wright@nrc.gov.*

Dated: March 4, 2010.

**Rochelle C. Bavol,**

*Office of the Secretary.*

[FR Doc. 2010–5093 Filed 3–5–10; 4:15 pm]

**BILLING CODE 7590–01–P**

## POSTAL REGULATORY COMMISSION

**[Docket No. A2010–3; Order No. 417]**

## Post Office Closing

**AGENCY:** Postal Regulatory Commission.

**ACTION:** Notice.

**SUMMARY:** This document informs the public that an appeal of the closing of the East Elko Station, NV post office has been filed. It identifies preliminary steps and provides a procedural schedule. Publication of this document will allow the Postal Service, petitioner, and others to take appropriate action.

**ADDRESSES:** Submit comments electronically via the Commission's Filing Online system at *http://www.prc.gov.* Commenters who cannot submit their views electronically should contact the person identified in the **FOR FURTHER INFORMATION CONTACT** section by telephone for advice on alternatives to electronic filing.

**FOR FURTHER INFORMATION CONTACT:** Stephen L. Sharfman, General Counsel, 202–789–6820 or *stephen.sharfman@prc.gov.*

**SUPPLEMENTARY INFORMATION:** Notice is hereby given that pursuant to 39 U.S.C. 404(d), the Commission has received an appeal of the closing of the East Elko Station located in Elko, Nevada 89801. The appeal was received by the Commission on February 22, 2010. The Commission hereby institutes a proceeding under 39 U.S.C. 404(d)(5) and designates the case as Docket No. A2010–3 to consider the petitioner's appeal. If the petitioner would like to further explain his position with supplemental information or facts, he may either file a Participant Statement on PRC Form 61 or file his own brief with the Commission by no later than March 29, 2010.

*Categories of issues apparently raised.* The categories of issues that appear to be raised include:

Effect on the community (39 U.S.C. 404(d)(2)(A)(i)).

After the Postal Service files the administrative record and the Commission reviews it, the Commission may find that there are additional issues other than that set forth above or, alternatively, the Commission may find that the Postal Service's determination disposes of one or more of those issues. The deadline for the Postal Service to file the administrative record with the Commission is March 9, 2010. 39 CFR 3001.113.

*Availability; Web site posting.* The Commission has posted the appeal and supporting material on its Web site at *http://www.prc.gov.* Additional filings in this case and participants' submissions also will be posted on the Web site, if provided in electronic format or amenable to conversion, and not subject to a valid protective order. Information on how to use the Commission's Web site is available online or by contacting the Commission's webmaster via telephone at 202–789–6873 or via electronic mail at *prc-webmaster@prc.gov.*

The appeal and all related documents are also available for public inspection in the Commission's docket section. Docket section hours are 8 a.m. to 4:30 p.m., Monday through Friday, except on Federal government holidays. Docket section personnel may be contacted via electronic mail at *prc-dockets@prc.gov* or via telephone at 202–789–6846.

*Filing of documents.* All filings of documents in this case shall be made using the Internet (Filing Online) pursuant to Commission rules 9(a) and 10(a) at the Commission's Web site, *http://www.prc.gov,* unless a waiver is obtained. 39 CFR 3001.9(a) and 10(a). Instructions for obtaining an account to file documents online may be found on the Commission's Web site, *http://www.prc.gov,* or by contacting the Commission's docket section at *prc-dockets@prc.gov* or via telephone at 202–789–6846.

*Intervention.* Those, other than the petitioner and respondent, wishing to be heard in this matter are directed to file a notice of intervention. *See* 39 CFR 3001.111(b). Notices of intervention are due on or before March 29, 2010. A notice of intervention shall be filed using the Internet (Filing Online) at the Commission's Web site, *http://www.prc.gov,* unless a waiver is obtained for hardcopy filing. *See* 39 CFR 3001.9(a) and 10(a).

*Further procedures.* By statute, the Commission is required to issue its decision within 120 days from the date this appeal was filed. *See* 39 U.S.C. 404(d)(5). A procedural schedule has been developed to accommodate this statutory deadline. In the interest of expedition, in light of the 120–day decision schedule, the Commission may request the Postal Service or other participants to submit information or memoranda of law on any appropriate issue. As required by the Commission rules, if any motions are filed, responses are due 7 days after any such motion is filed. 39 CFR 3001.21.

*Comments.* In considering this appeal, the Commission will be relying on its interpretation of 39 U.S.C. section 404(d)(1) which accords customers of stations and branches the same treatment as customers of post offices for purposes of appeal.

The Commission's position of record on this issue has been developed since the late 1970s, when the former Rate Commission first addressed the definition of post office in Docket No. A78–1. *In re Gresham, SC,* Order No. 208 (August 16, 1978). Since that time, the Commission has consistently put forward the position that stations and branches were "post offices" within the meaning of section 404(d).

Comments from the mailing community and general public in this docket are encouraged.

In addition, it would be helpful for commenters to review whether precedent based on these cases, decided by the former Rate Commission, should be controlling in the new regulatory environment established by the Postal Accountability and Enhancement Act.

*It is ordered:*

1. The Postal Service shall file the administrative record in this appeal, or otherwise file a responsive pleading to the appeal, by March 9, 2010.

2. The procedural schedule listed below is hereby adopted.

3. Pursuant to 39 U.S.C. 505, Richard A. Oliver is designated officer of the Commission (Public Representative) to represent the interests of the general public.

4. The Secretary shall arrange for publication of this notice and order and procedural schedule in the **Federal Register**.

By the Commission.

**Shoshana M. Grove,**

*Secretary.*

PROCEDURAL SCHEDULE

| | |
|---|---|
| February 22, 2009 | Filing of Appeal. |
| March 9, 2010 | Deadline for Postal Service to file administrative record in this appeal or responsive pleading. |
| March 29, 2010 | Deadline for petitions to intervene (*see* 39 CFR 3001.111(b)). |
| March 29, 2010 | Deadline for petitioner's form 61 or initial brief in support of petition (*see* 39 CFR 3001.115(a) and (b)). |
| April 19, 2010 | Deadline for answering brief in support of Postal Service (*see* 39 CFR 3001.115(c)). |
| May 4, 2010 | Deadline for reply briefs in response to answering briefs (*see* 39 CFR 3001.115(d)). |
| May 11, 2010 | Deadline for motions by any party requesting oral argument; the Commission will schedule oral argument only when it is a necessary addition to the written filings (*see* 39 CFR 3001.116). |
| June 22, 2010 | Expiration of the Commission's 120-day decisional schedule (*see* 39 U.S.C. 404(d)(5)). |

[FR Doc. 2010–4921 Filed 3–8–10; 8:45 am]

BILLING CODE 7710–FW–S

## POSTAL REGULATORY COMMISSION

**[Docket No. R2010–3; Order No. 416]**

## Special Summer Postal Rate Program

**AGENCY:** Postal Regulatory Commission.

**ACTION:** Notice.

**SUMMARY:** The Postal Service plans to offer a special volume pricing incentive for certain Standard Mail this summer. This document announces establishment of a docket to consider the plan, provides certain information about the plan, and provides additional information about related procedures, including an opportunity for public comment.

**DATES:** Comments are due: March 18, 2010.

**ADDRESSES:** Submit comments electronically via the Commission's Filing Online system at *http://www.prc.gov.* Commenters who cannot submit their views electronically should contact the person identified in the **FOR FURTHER INFORMATION CONTACT** section by telephone for advice on alternatives to electronic filing.

**FOR FURTHER INFORMATION CONTACT:** Stephen L. Sharfman, General Counsel, 202–789–6820 or *stephen.sharfman@prc.gov.*

**SUPPLEMENTARY INFORMATION:**

### Table of Contents

I. Overview
II. Postal Service Filing
III. Commission Action
IV. Ordering Paragraphs

### I. Overview

On February 26, 2010, the Postal Service filed with the Commission a notice announcing its intention to adjust prices for Standard Mail letters and flats pursuant to 39 U.S.C. 3622 and 39 CFR part 3010.[1] The proposed adjustment is another Standard Mail Volume Incentive Pricing Program (Standard Mail Incentive Program) similar to the one introduced in May 2009,[2] and subsequently approved by the Commission.[3] The planned implementation date of the Standard Mail Incentive Program is July 1, 2010, and the planned expiration date is September 30, 2010.

### II. Postal Service Filing

*Standard Mail Incentive Program.* The Standard Mail Incentive Program, like that introduced in Docket No. R2009–3, will give eligible companies a 30 percent postage rebate on qualifying Standard Mail letters and flats above a predetermined threshold agreed upon by both the mailer and the Postal Service. Notice at 4. The threshold is the amount of Standard Mail for each participating company sent through the Permit(s) or Ghost Permit(s) or through its Mail Service Provider (MSP) from July 1 to September 30, 2010 plus 5 percent of the volume for the same period last year (SPLY + 5 percent). *Id.* Based on the Postal Service's quarter 2 forecast of less than 1 percent volume growth from July 1 through September 30, 2010, a participant's volumes must grow significantly more than average before qualifying for any rebate. *Id.*

To ensure against mailers shifting June volume to July, or October volume to September, an additional volume threshold will be established for June through October 2010, using the same SPLY + 5 percent formula. If the actual volumes for that period do not meet the respective month's threshold (SPLY + 5 percent), the difference will be deducted from the Standard Mail Incentive Program qualifying volume. *Id.*

Eligibility for the Standard Mail Incentive Program requires qualifying mailers to have mailed 350,000 or more Standard Mail letters and flats between July 1 and September 30, 2009 through one or more permit imprint advance deposit account(s) owned by the company or through permits set up on behalf of the company by a MSP. *Id.* at 3. Approximately 3,525 customers will be eligible to participate in the sale, representing 67 percent of Standard Mail volume. *Id.* To participate, documentation specifying that the applicant is the owner of the mail is required. *Id.* MSPs are not eligible, and participating mailers are not eligible for any other concurrent postal incentive

[1] United States Postal Service Notice of Market-Dominant Price Adjustment, February 26, 2010 (Notice).

[2] Docket No. R2009–3, United States Postal Service Notice of Market-Dominant Price Adjustment, May 1, 2009.

[3] Docket No. R2009–3, Order Approving Standard Mail Volume Incentive Pricing Program, Order No. 219, June 4, 2009.

program that would result in multiple discounts. *Id.* at 3–4.

The objective of the Standard Mail Incentive Program is to generate incremental Standard Mail volume and revenue. Volume is estimated to increase between 311 million and 1.1 billion new pieces. *Id.* at 2. The Standard Mail Incentive Program is designed to increase mail volume during a typically low-volume summer period. The program is intended to benefit customers, who will have the opportunity to foster relationships with existing and new patrons with limited investment, and the Postal Service, which can utilize current excess capacity to deliver the additional low-cost volumes during the summer months, improve its data systems, and enhance relationships with customers. *Id.* at 3.

The Postal Service notes that the volume threshold is lower than last year and will result in about 400 more customers being eligible to participate. *Id.* at 9. It asserts that additional costs for increased labor or technology solutions to administer the program prohibit accepting every mailer of Standard Mail. In addition, it contends that extending eligibility to small businesses might result in rebates on mail that would be sent anyway. *Id.*

*Conformance with 39 CFR part 3010.* The Postal Service represents, in conformance with the notice requirements of 39 CFR 3010.14(a)(3), that it will issue public notice of the price changes at least 45 days before the planned implementation date via several additional means, including a press release, notice on its Web site (*http://www.usps.com*) and its Postal Explorer Web site, and in future issues of *MailPro,* the *Postal Bulletin,* and the **Federal Register**. The Postal Service identifies Greg Dawson, Manager, Pricing Strategy, as the official available to provide prompt responses to requests for clarification from the Commission. *Id.* at 2.

Rule 3010.14(b)(9) requires that the Postal Service's notice include every change to the product descriptions within the Mail Classification Schedule (MCS) necessitated by the planned price adjustments. The Postal Service presented proposed changes for the previous Standard Mail Incentive Program in Appendix A to its notice in Docket No. R2009–3 based on draft MCS language being developed by the Commission in cooperation with the Postal Service. The Postal Service states that the Notice is covered by the current MCS; thus, its Notice does not include a new schedule of proposed MCS language. *Id.* at 1, n.1.

*Program administration.* A Postal Service letter to all eligible Standard Mail customers will provide instructions for mailers who wish to apply for the program and how to verify their threshold volumes through an enrollment process. Mailers not receiving a letter who wish to apply may contact *summersale@usps.gov.* After the Postal Service and the mailer agree on threshold volumes, a Certification Letter must be signed for full enrollment. Certified volumes will be used to calculate the rebates due at the end of the Standard Mail Incentive Program with data from Postal One! and CBCIS. Rebates, after adjustments, will be added to the company's Trust Account. Each mailer is to certify, similar to the certification required by PS Form 3600, Postage Statement, the data used to calculate the volume thresholds and rebates. *Id.* at 5.

*Financial impact.* The Standard Mail Incentive Program is expected to provide incremental revenue of about $34 million to $157 million from new volume. Customers whose mail would increase without the Incentive Program will benefit through a postage discount on volume above their certified threshold. Based on the previous Standard Mail Incentive Program, the Postal Service does not expect a significant buy down from First-Class Mail. *Id.* at 6.

The Postal Service believes there is excess capacity to process and deliver additional volume so that, in the short run, additional volume will incur reduced additional attributable costs that may be below the standard estimate of long-run attributable cost. Appendix A to the Notice includes an explanation of the Postal Service's assessment of excess capacity and attributable costs. *Id.* at 7. Unlike the previous Standard Mail Incentive Program, the Postal Service presumes that the increased volumes may incur some additional carrier costs to deliver the incremental volumes, but the Postal Service does not expect short-run cost increases in buildings, new equipment, and vehicles. *Id.*

The Postal Service notes that the Standard Mail Incentive Program includes Standard Flats and Non-Profit products which did not make a positive contribution in Docket No. R2009–3. *Id.* In support, the Postal Service says this initiative must be viewed as a whole, citing Appendix A to the Notice. It says that excluding Standard flats from the Standard Mail Incentive Program would change the dynamics of the sale for a large portion of catalog mailers. These mailers view Standard Flats and Carrier Route Flats as essentially the same product providing about 40 percent of their volume in Standard Flats (the other 60 percent is Carrier Route Flats). Where Standard Mail Flats are residual pieces after all possible Carrier Route volumes are qualified, their exclusion will reduce customers' incentives and potentially result in unintended consequences. *Id.* The Postal Service further states that long-term competitive benefits of including Standard Flats in the Standard Mail Incentive Program can result in more catalogs being mailed as evidenced by their large incremental growth above the baseline during the previous Incentive Program. Mailers also claim that mailing more catalogs converts prospects to new customers, which increase the use and efficiency of the mail. *Id.* at 8. The expected net contribution of the Standard Mail Incentive Program is between -$3.5 million to + $25.4 million with administrative costs estimated at $930,000. *Id.*

*Risks.* The Postal Service cites several inherent risks that may affect the financial outcome of the Standard Mail Incentive Program. These include overestimating the volumes generated by the incentive, underestimating the administrative costs, and the risk that a large portion of rebates would be paid on volumes that would have been mailed anyway. *Id.* at 8–9.

*Price cap compliance.* The Postal Service intends to treat the program in a manner mathematically analogous to the procedure in rule 3010.24 consistent with the previous Standard Mail Incentive Program. It will ignore the effect of the price decrease on the price cap for both future and current prices and therefore has not made a calculation of cap or price changes described in rule 3010.14(b)(1)-(4). *Id.* at 10.

*Objectives and factors, workshare discounts, and preferred rates.* The Postal Service states that the Standard Mail Incentive Program does not substantially alter the degree Standard Mail prices already address the objectives and many of the factors in 39 U.S.C. 3622(b) of title 39. *Id.* at 10–14. The Postal Service further states that to the extent the program affects Standard Mail workshare discounts, it will shrink them, keeping discounts with a passthrough of 100 percent or less in compliance, and bringing passthroughs over 100 percent closer to compliance. Nonprofit Standard Mail letters and flats will be eligible for the Standard Mail Incentive Program and the rates will change proportionately, thus maintaining the 60 percent ratio between prices.

### III. Commission Action

The Commission establishes Docket No. R2010–3 to consider all matters related to the Notice as required by 39 U.S.C. 3622. Interested persons may express views and offer comments on whether the planned changes are consistent with the policies of 39 U.S.C. 3622 and the Commission's applicable regulations. Comments are due no later than March 18, 2010.

The Commission appoints Emmett Rand Costich, Kenneth R. Moeller and John Klingenberg to represent the interests of the general public in this proceeding. *See* 39 U.S.C. 505.

### IV. Ordering Paragraphs

*It is ordered:*

1. The Commission establishes Docket No. R2010–3 to consider matters raised by the Postal Service's February 26, 2010 filing.
2. Interested persons may submit comments on the planned price adjustments. Comments are due March 18, 2010.
3. Pursuant to 39 U.S.C. 505, the Commission appoints Emmett Rand Costich, Kenneth R. Moeller and John Klingenberg to represent the interests of the general public in this proceeding.
4. The Commission directs the Secretary of the Commission to arrange for prompt publication of this Notice in the **Federal Register**.

By the Commission.

**Shoshana M. Grove,**

*Secretary.*

[FR Doc. 2010–4915 Filed 3–8–10; 8:45 am]

BILLING CODE 7710–FW–S

## SMALL BUSINESS ADMINISTRATION

**[Disaster Declaration # 12057 and # 12058]**

### North Dakota Disaster # ND–00019

**AGENCY:** U.S. Small Business Administration.

**ACTION:** Notice.

**SUMMARY:** This is a Notice of the Presidential declaration of a major disaster for Public Assistance Only for the State of North Dakota (FEMA—1879—DR), dated 02/26/2010.

*Incident:* Severe Winter Storm.

*Incident Period:* 01/20/2010 through 01/25/2010.

*Effective Date:* 02/26/2010.

*Physical Loan Application Deadline Date:* 04/27/2010.

*Economic Injury (EIDL) Loan Application Deadline Date:* 11/26/2010.

**ADDRESSES:** Submit completed loan applications to: U.S. Small Business Administration, Processing and Disbursement Center, 14925 Kingsport Road, Fort Worth, TX 76155.

**FOR FURTHER INFORMATION CONTACT:** A. Escobar, Office of Disaster Assistance, U.S. Small Business Administration, 409 3rd Street, SW., Suite 6050, Washington, DC 20416.

**SUPPLEMENTARY INFORMATION:** Notice is hereby given that as a result of the President's major disaster declaration on 02/26/2010, Private Non-Profit organizations that provide essential services of governmental nature may file disaster loan applications at the address listed above or other locally announced locations.

The following areas have been determined to be adversely affected by the disaster:

*Primary Counties:*

Adams, Barnes, Billings, Bowman, Burke, Dickey, Dunn, Emmons, Golden Valley, Grant, Hettinger, Logan, McIntosh, McKenzie, Mercer, Morton, Mountrail, Oliver, Ransom, Renville, Sioux, Slope, Stark, Steele, Walsh, and the Standing Rock Indian Reservation.

The Interest Rates are:

| | Percent |
|---|---|
| For Physical Damage: | |
| Non-Profit Organizations With Credit Available Elsewhere | 3.625 |
| Non-Profit Organizations Without Credit Available Elsewhere | 3.000 |
| For Economic Injury: | |
| Non-Profit Organizations Without Credit Available Elsewhere | 3.000 |

The number assigned to this disaster for physical damage is 12057B and for economic injury is 12058B.

(Catalog of Federal Domestic Assistance Numbers 59002 and 59008)

**James E. Rivera,**

*Associate Administrator for Disaster Assistance.*

[FR Doc. 2010–4933 Filed 3–8–10; 8:45 am]

BILLING CODE 8025–01–P

## SMALL BUSINESS ADMINISTRATION

**[Disaster Declaration # 12034 and # 12035]**

### Arkansas Disaster Number AR–00042

**AGENCY:** U.S. Small Business Administration.

**ACTION:** Amendment 1.

**SUMMARY:** This is an amendment of the Presidential declaration of a major disaster for Public Assistance Only for the State of Arkansas (FEMA–1872–DR), dated 02/04/2010.

*Incident:* Severe Storms and Flooding.

*Incident Period:* 12/23/2009 through 01/02/2010.

**EFFECTIVE DATE:** 02/26/2010.

*Physical Loan Application Deadline Date:* 04/05/2010.

*Economic Injury (EIDL) Loan Application Deadline Date:* 11/04/2010.

**ADDRESSES:** Submit completed loan applications to: U.S. Small Business Administration, Processing and Disbursement Center, 14925 Kingsport Road, Fort Worth, TX 76155.

**FOR FURTHER INFORMATION CONTACT:** A. Escobar, Office of Disaster Assistance, U.S. Small Business Administration, 409 3rd Street, SW., Suite 6050, Washington, DC 20416.

**SUPPLEMENTARY INFORMATION:** The notice of the President's major disaster declaration for Private Non-Profit organizations in the State of Arkansas, dated 02/04/2010, is hereby amended to include the following areas as adversely affected by the disaster.

*Primary Counties:* Pulaski

All other information in the original declaration remains unchanged.

(Catalog of Federal Domestic Assistance Numbers 59002 and 59008)

**James E. Rivera,**

*Associate Administrator for Disaster Assistance.*

[FR Doc. 2010–4936 Filed 3–8–10; 8:45 am]

BILLING CODE 8025–01–P

## OFFICE OF SCIENCE AND TECHNOLOGY POLICY

### Subcommittee on Forensic Science; Committee on Science; National Science and Technology Council

**ACTION:** General Notice. Nominations for Interagency Working Group participants.

**SUMMARY:** The Subcommittee on Forensic Science of the National Science and Technology Council's (NSTC's) Committee on Science is now accepting nominations for Interagency Working Group participants. Nominees must be a State, local, or tribal government elected officer (or their designated employee with authority to act on their behalf).

**DATES AND ADDRESSES:** The Subcommittee must receive all nominations for Interagency Working Group participants by 5 p.m. EDT March 12, 2010. Nominations should be submitted via electronic mail (e-mail) to

Robin W. Jones, Executive Secretary, at *Robin.W.Jones@usdoj.gov.*

**Kenneth E. Melson,**

*Co-Chair, Subcommittee on Forensic Science.*

[FR Doc. 2010–4899 Filed 3–8–10; 8:45 am]

**BILLING CODE 4410–FY–P**

## SECURITIES AND EXCHANGE COMMISSION

### Proposed Collection; Comment Request

Upon Written Request, Copies Available From: Securities and Exchange Commission, Office of Investor Education and Advocacy, Washington, DC 20549–0213.

Extension: Rule 31; SEC File No. 270–537; OMB Control No. 3235–0597.

Notice is hereby given that pursuant to the Paperwork Reduction Act of 1995 (44 U.S.C. 3501 *et seq.*), the Securities and Exchange Commission ("Commission") is soliciting comments on the collection of information summarized below. The Commission plans to submit this existing collection of information to the Office of Management and Budget for extension and approval.

Section 31 of the Securities Exchange Act of 1934 (15 U.S.C. 78ee) ("Exchange Act") requires the Commission to collect fees and assessments from national securities exchanges and national securities associations (collectively, "self-regulatory organizations" or "SROs") based on the volume of their securities transactions. To collect the proper amounts, the Commission adopted Rule 31 (17 CFR 240.31) and Form R31 (17 CFR 249.11) under the Exchange Act whereby the SROs must report to the Commission the volume of their securities transaction and the Commission, based on that data, calculates the amount of fees and assessments that the SROs owe pursuant to Section 31. Rule 31 and Form R31 require the SROs to provide this data on a monthly basis.

The Commission estimates that each respondent makes 12 such filings on an annual basis at an average hourly burden of approximately 1.47 hours per response. Currently, there are 16 respondents. However, based on past experience, the Commission is estimating an increase to 18 respondents, including 13 national securities exchanges, two security futures exchanges, and one national securities association subject to the collection of information requirements of Rule 31 and two registered clearing agencies are required to provide certain data in their possession needed by the SROs to complete Form R31. The Commission estimates that the total burden for all 18 respondents is 318 hours (12 filings/respondent per year × 1.47 hours/filing × 18 respondents = 317.52; rounded to 318 hours) per year.

Written comments are invited on: (a) Whether the proposed collection of information is necessary for the proper performance of the functions of the Commission, including whether the information shall have practical utility; (b) the accuracy of the Commission's estimate of the burden of the proposed collection of information; (c) ways to enhance the quality, utility, and clarity of the information to be collected; and (d) ways to minimize the burden of the collection of information on respondents, including through the use of automated collection techniques or other forms of information technology. Consideration will be given to comments and suggestions submitted in writing within 60 days of this publication.

Please direct your written comments to: Charles Boucher, Director/Chief Information Officer, Securities and Exchange Commission, c/o Shirley Martinson, 6432 General Green Way, Alexandria, Virginia, 22312 or by sending an email to: *PRA_Mailbox@sec.gov.*

Dated: March 2, 2010.

**Florence E. Harmon,**

*Deputy Secretary.*

[FR Doc. 2010–4914 Filed 3–8–10; 8:45 am]

**BILLING CODE 8011–01–P**

## SECURITIES AND EXCHANGE COMMISSION

**[Investment Company Act Release No. 29167; File No. 812–13676]**

### The Chile Fund, Inc., et al.; Notice of Application

March 2, 2010.

**AGENCY:** Securities and Exchange Commission ("Commission").

**ACTION:** Notice of application under section 6(c) of the Investment Company Act of 1940 ("Act") for an exemption from section 19(b) of the Act and rule 19b–1 under the Act.

*Applicants:* The Chile Fund, Inc. ("Chile Fund"), Aberdeen Australia Equity Fund ("Australia Fund," together with the Chile Fund, the "Current Funds"), Aberdeen Asset Management Asia Limited ("Aberdeen Asia") and Aberdeen Asset Management Investment Services Limited ("Aberdeen").

**SUMMARY:** *Summary of Application:* Applicants request an order to permit certain registered closed-end investment companies to make periodic distributions of long-term capital gains with respect to their outstanding common stock as frequently as monthly in any one taxable year, and as frequently as distributions are specified by or in accordance with the terms of any outstanding preferred stock that such investment companies may issue. The requested order would supersede a prior order issued to the Australia Fund.

**DATES:** *Filing Dates:* The application was filed on July 27, 2009, and amended on December 3, 2009, January 6, 2010, and February 25, 2010.

**HEARING OR NOTIFICATION OF HEARING:** An order granting the application will be issued unless the Commission orders a hearing. Interested persons may request a hearing by writing to the Commission's Secretary and serving applicants with a copy of the request, personally or by mail. Hearing requests should be received by the Commission by 5:30 p.m. on March 29, 2010 and should be accompanied by proof of service on applicants, in the form of an affidavit or, for lawyers, a certificate of service. Hearing requests should state the nature of the writer's interest, the reason for the request, and the issues contested. Persons who wish to be notified of a hearing may request notification by writing to the Commission's Secretary.

**ADDRESSES:** Secretary, Securities and Exchange Commission, 100 F Street, NE., Washington, DC 20549–1090; Applicants, c/o Aberdeen Asset Management Inc., 1735 Market Street, 32nd Floor, Philadelphia, PA 19103.

**FOR FURTHER INFORMATION CONTACT:** Lewis B. Reich, Senior Counsel, at (202) 551–6919, or Jennifer L. Sawin, Branch Chief, at (202) 551–6821 (Division of Investment Management, Office of Investment Company Regulation).

**SUPPLEMENTARY INFORMATION:** The following is a summary of the application. The complete application may be obtained via the Commission's Web site by searching for the file number, or for an applicant using the Company name box, at *http://www.sec.gov/search/search.htm,* or by calling (202) 551–8090.

### Applicants' Representations

1. The Current Funds are both Maryland corporations registered under the Act as closed-end management investment companies.[1] The common

[1] The Current Funds are the only registered closed-end investment companies that currently

stock of each Current Fund is listed on the NYSE Amex. Applicants believe that the shareholders of each Fund that would rely on the requested order are generally conservative, dividend-sensitive investors who desire current income periodically. Although the Current Funds have not issued preferred stock, their boards of directors (the "Chile Fund Board" and the "Australia Fund Board") or the board of directors or trustees of another Fund [2] may authorize such issuances in the future.

2. Aberdeen and Aberdeen Asia are direct wholly-owned subsidiaries of Aberdeen Asset Management PLC, and are investment advisers registered under the Investment Advisers Act of 1940 ("Advisers Act"). Aberdeen serves as investment adviser to and is responsible for the overall management of the Chile Fund, and Aberdeen Asia serves as investment adviser to and is responsible for the overall management of the Australia Fund. Any other Adviser will also be registered with the Commission under the Advisers Act.

3. Applicants state that on June 24–25, 2009, the Chile Fund Board, including a majority of the members who are not "interested persons" as defined in section 2(a)(19) of the Act (the "Independent Directors") reviewed information regarding the purpose of the proposed distribution policy (a "Plan", and for the Chile Fund, the "Chile Fund Plan"), the reasonably foreseeable effects of the Plan on the Fund's long-term total return (in relation to market price and net asset value per share ("NAV")), whether the rate of distribution under the Chile Fund Plan will exceed the Chile Fund's expected total return (in relation to NAV). Applicants state that the Chile Fund Board, including a majority of the Independent Directors, also considered any conflicts of interest that Aberdeen, its affiliated persons, and affiliated persons of the Chile Fund might have with respect to the adoption or implementation of the Chile Fund Plan. Applicants further state that, after considering such information, the Chile Fund Board, including its Independent Directors, determined that the Chile Fund Plan was consistent with the Fund's investment objectives and in the best interests of its stockholders, and adopted the Chile Fund Plan in respect of the Chile Fund's outstanding common stock.

4. Applicants state that, under the Chile Fund Plan, the Chile Fund would make level quarterly distributions based upon a fixed percentage of the rolling average of the Fund's prior four quarter-end net asset values. Applicants state that the purpose of the Chile Fund Plan is to allow the Chile Fund to make fixed periodic distributions to provide a steady return to the Chile Fund's common stockholders. Applicants state that the annual distribution rate with respect to the Chile Fund's common shares will be independent of the Chile Fund's performance in any particular period but would be expected not to exceed the Chile Fund's total return over time. Applicants explain that, except for extraordinary distributions and potential increases or decreases in the final dividend periods in light of the Fund's performance for the entire calendar year and to enable the Fund to comply with the distribution requirements of subchapter M of the Internal Revenue Code of 1986 ("Code") for the calendar year, each distribution on the common shares would be at the stated rate then in effect.

5. Applicants state that prior to implementing the Chile Fund Plan, the Chile Fund Board will adopt policies and procedures under rule 38a–1 under the Act (a) that are reasonably designed to ensure that all notices required to be sent to the Chile Fund's stockholders pursuant to section 19(a) of the Act, rule 19a–1 thereunder and condition D below (each a "19(a) Notice") include the disclosure required by rule 19a–1 and by condition B.1 below, and that all other written communications by the Chile Fund or its agents regarding distributions under the Plan include the disclosure required by condition C below, and (b) that require the Chile Fund to keep records that demonstrate compliance with all of the conditions of the order and that are necessary for the Chile Fund to form the basis for, or demonstrate the calculation of, the amounts disclosed in its 19(a) Notices.

6. Applicants state that on December 12, 1997, the Australia Fund, relying on a prior order ("Prior Order"),[3] instituted a Plan with respect to the Australia Fund's common stock (the "Australia Fund Plan") that was discontinued on March 14, 2002 and subsequently re-instituted on February 17, 2004. In instituting and re-instituting the Australia Fund Plan, the Australia Fund Board, including a majority of its Independent Directors, found that the Australia Fund Plan was in the best interests of the Australia Fund's common stockholders. Applicants state that the purpose of the Australia Fund Plan is to allow the Australia Fund to make fixed periodic distributions to provide a steady return to the Australia Fund's common stockholders. Applicants state that the annual distribution rate with respect to the Australia Fund's common shares will be independent of the Australia Fund's performance in any particular period but would be expected not to exceed the Australia Fund's total return over time. Applicants explain that, except for extraordinary distributions and potential increases or decreases in the final dividend periods in light of the Fund's performance for the entire calendar year and to enable the Fund to comply with the distribution requirements of subchapter M of the Internal Revenue Code of 1986 ("Code") for the calendar year, each distribution on the common shares is at the stated rate then in effect. The Australia Fund Plan currently pays quarterly distributions at an annual rate, set once a year, that is a percentage of the rolling average of the Fund's prior four quarter-end net asset values. Prior to relying on the requested order in connection with the Australia Fund Plan, the Australia Fund Board will have taken the actions described in, and the Australia Fund will have satisfied the representations set forth in, the application. When the requested order is issued, it will supersede the Prior Order.

**Applicants' Legal Analysis**

1. Section 19(b) generally makes it unlawful for any registered investment company to make long-term capital gains distributions more than once each year. Rule 19b–1 limits the number of capital gains dividends, as defined in section 852(b)(3)(C) of the Code ("distributions"), that a fund may make with respect to any one taxable year to one, plus a supplemental "clean up" distribution made pursuant to section 855 of the Code not exceeding 10% of the aggregate amount distributed for the year, plus one additional capital gain dividend made in whole or in part to avoid the excise tax under section 4982 of the Code.

intend to rely on the requested order. Applicants request that the order also apply to each registered closed-end investment company that: (a) Is advised by either Aberdeen or Aberdeen Asia (including any successor in interest) or by any entity controlling, controlled by, or under common control (within the meaning of section 2(a)(9) of the Act) with Aberdeen or Aberdeen Asia (collectively with Aberdeen and Aberdeen Asia, "Advisers"), and (b) decides in the future to rely on the order and complies with the terms and conditions of the application (collectively with the Current Funds, "Funds" and each, a "Fund"). A successor in interest is limited to entities that result from a reorganization into another jurisdiction or a change in the type of business organization.

[2] The board of directors or trustees of any Fund, including the Current Funds, as used herein, a "Board."

[3] *The First Australia Fund, Inc.,* Release Nos. IC–23363 (July 28, 1998) (notice of application) and IC–23397 (August 24, 1998) (order). The Australia Fund was formerly named The First Australia Fund, Inc.

2. Section 6(c) provides, in relevant part, that the Commission may exempt any person or transaction from any provision of the Act to the extent that such exemption is necessary or appropriate in the public interest and consistent with the protection of investors and the purposes fairly intended by the policy and provisions of the Act.

3. Applicants state that one of the concerns leading to the enactment of section 19(b) and adoption of rule 19b–1 was that shareholders might be unable to distinguish between frequent distributions of capital gains and dividends from investment income. Applicants state, however, that rule 19a–1 effectively addresses this concern by requiring that a separate statement showing the sources of a distribution (*e.g.,* estimated net income, net short-term capital gains, net long-term capital gains and/or return of capital) accompany any distributions (or the confirmation of the reinvestment of distributions) estimated to be sourced in part from capital gains or capital. Applicants state that the same information is included in each Fund's annual report to stockholders. Further, IRS Form 1099–DIV is sent to each common and preferred stockholder who received distributions during a particular year (including shareholders who have sold shares during the year).

4. Applicants further state that each Fund will make the additional disclosures required by the conditions set forth below, and each of them will have adopted compliance policies and procedures in accordance with rule 38a–1 under the Act to ensure that all required notices and disclosures are sent to shareholders. Applicants argue that rule 19a–l, the Plans, the Funds' compliance policies and the conditions listed below ensure that each Fund's shareholders would be provided sufficient information to understand that their periodic distributions are not tied to the Fund's net investment income (which for this purpose is the Fund's taxable income other than from capital gains) and realized capital gains to date, and may not represent yield or investment return. Applicants also state that compliance with the Funds' compliance procedures and condition C below will ensure that prospective shareholders and third parties are provided with the same information. Accordingly, applicants assert that continuing to subject the Funds to section 19(b) and rule 19b–1 would afford stockholders no additional protection.

5. Applicants note that section 19(b) and rule 19b–1 also were intended to prevent improper fund share sales practices, including, in particular, the practice of urging an investor to purchase shares of a fund on the basis of an upcoming capital gains dividend ("selling the dividend"), where the dividend would result in an immediate corresponding reduction in NAV and would be in effect a taxable return of the investor's capital. Applicants assert that the "selling the dividend" concern should not apply to closed-end investment companies, such as the Funds, which do not continuously distribute shares. According to applicants, if the underlying concern extends to secondary market purchases of shares of closed-end funds that are subject to a large upcoming capital gains dividend, adoption of a periodic distribution plan actually helps minimize the concern by avoiding, through periodic distributions, any buildup of large end-of-the-year distributions.

6. Applicants also note that common stock of a closed-end fund often trades in the marketplace at a discount to its NAV. Applicants believe that this discount may be reduced if the Fund is permitted to pay more frequent dividends with respect to its common stock at a consistent rate.

7. Applicants assert that the application of rule 19b–1 to the Plans actually could have inappropriate influence on portfolio management decisions. Applicants state that, in the absence of an exemption from rule 19b–1, the adoption of a periodic distribution plan imposes pressure on management (i) not to realize any net long-term capital gains until the point in the year that the fund can pay all of its remaining distributions in accordance with rule 19b–1 and (ii) not to realize any long-term capital gains during any particular year in excess of the amount of the aggregate pay-out for the year (since as a practical matter excess gains must be distributed and accordingly would not be available to satisfy pay-out requirements in following years), notwithstanding that purely investment considerations might favor realization of long-term gains at different times or in different amounts. Applicants thus assert that the limitation on the number of capital gain dividends that a Fund may make with respect to any one year may prevent the normal and efficient operation of a periodic distribution plan whenever that Fund's realized net long-term capital gains in any year exceed the total of the periodic distributions that may include such capital gains under the rule.

8. Applicants also assert that rule 19b–1 may force the fixed regular periodic distributions to be funded with returns of capital [4] (to the extent net investment income and realized short-term capital gains are insufficient to fund the distribution), even though realized net long-term capital gains otherwise would be available. To distribute all of a Fund's long-term capital gains within the limits in rule 19b–1, a Fund may be required to make total distributions in excess of the annual amount called for by its periodic distribution plan or to retain and pay taxes on the excess amount. Applicants thus assert that the requested order would minimize these anomalous effects of rule 19b–1 by enabling the Funds to realize long-term capital gains as often as investment considerations dictate without fear of violating rule 19b–1.

9. Applicants state that Revenue Ruling 89–81 under the Code requires that a fund that has both common shares and preferred shares outstanding designate the types of income, *e.g.,* investment income and capital gains, in the same proportion as the total distributions distributed to each class for the tax year. To satisfy the proportionate designation requirements of Revenue Ruling 89–81, whenever a fund has realized a long-term capital gain with respect to a given tax year, the fund must designate the required proportionate share of such capital gain to be included in common and preferred stock dividends. Applicants state that although rule 19b–1 allows a fund some flexibility with respect to the frequency of capital gains distributions, a fund might use all of the exceptions available under the rule for a tax year and still need to distribute additional capital gains allocated to the preferred stock to comply with Revenue Ruling 89–81.

10. Applicants assert that the potential abuses addressed by section 19(b) and rule 19b–1 do not arise with respect to preferred shares issued by a closed-end fund. Applicants assert that such distributions are either fixed or are determined in periodic auctions by reference to short-term interest rates rather than by reference to performance of the issuer, and Revenue Ruling 89–81 determines the proportion of such distributions that are comprised of the long-term capital gains.

11. Applicants also submit that the "selling the dividend" concern is not applicable to preferred stock, which entitles a holder to no more than a periodic dividend at a fixed rate or the rate determined by the market, and, like

[4] Returns of capital as used in the application means return of capital for financial accounting purposes and not for tax accounting purposes.

a debt security, is priced based upon its liquidation value, dividend rate, credit quality, and frequency of payment. Applicants state that investors buy preferred stock for the purpose of receiving payments at the frequency bargained for.

12. Applicants request an order pursuant to section 6(c) of the Act granting an exemption from section 19(b) of the Act and rule 19b–1 thereunder to permit each Fund to make periodic capital gain dividends (as defined in section 852(b)(3)(C) of the Code) as often as monthly in any one taxable year in respect of its common stock and as often as specified by or determined in accordance with the terms thereof in respect of the Fund's preferred stock (if any).[5]

**Applicants' Conditions**

Applicants agree that any order of the Commission granting the requested relief will be subject to the following conditions:

*A. Compliance Review and Reporting*

Each Fund's chief compliance officer will:

1. Report to the Fund's Board, no less frequently than once every three months or at the next regularly scheduled quarterly Board meeting, whether:

(a) The Fund and its Adviser have complied with the conditions of the order and

(b) A material compliance matter (as defined in Rule 38a–1(e)(2) under the Act) has occurred with respect to such conditions; and

2. Review the adequacy of the policies and procedures adopted by the Board no less frequently than annually.

*B. Disclosures To Fund Stockholders*

1. Each 19(a) Notice disseminated to the holders of the Fund's common stock, in addition to the information required by Section 19(a) and Rule 19a–1:

(a) Will provide, in a tabular or graphical format:

(1) The amount of the distribution, on a per common share basis, together with the amounts of such distribution amount, on a per common share basis and as a percentage of such distribution amount, from estimated: (A) Net investment income; (B) net realized short-term capital gains; (C) net realized long-term capital gains; and (D) return of capital or other capital source;

(2) The fiscal year-to-date cumulative amount of distributions, on a per common share basis, together with the amounts of such cumulative amount, on a per common share basis and as a percentage of such cumulative amount of distributions, from estimated: (A) Net investment income; (B) net realized short-term capital gains; (C) net realized long-term capital gains; and (D) return of capital or other capital source;

(3) The average annual total return in relation to the change in NAV for the 5-year period (or, if the Fund's history of operations is less than five years, the time period commencing immediately following the Fund's first public offering) ending on the last day of the month ended immediately prior to the most recent distribution record date compared to the current fiscal period's annualized distribution rate expressed as a percentage of NAV as of the last day of the month prior to the most recent distribution record date; and

(4) The cumulative total return in relation to the change in NAV from the last completed fiscal year to the last day of the month prior to the most recent distribution record date compared to the fiscal year-to-date-cumulative distribution rate expressed as a percentage of NAV as of the last day of the month prior to the most recent distribution record date;

Such disclosure shall be made in a type size at least as large and as prominent as the estimate of the sources of the current distribution; and

(b) Will include the following disclosure:

(1) "You should not draw any conclusions about the Fund's investment performance from the amount of this distribution or from the terms of the Fund's Plan";

(2) "The Fund estimates that it has distributed more than its income and capital gains; therefore, a portion of your distribution may be a return of capital. A return of capital may occur, for example, when some or all of the money that you invested in the Fund is paid back to you. A return of capital distribution does not necessarily reflect the Fund's investment performance and should not be confused with 'yield' or 'income' ";[6] and

(3) "The amounts and sources of distributions reported in this 19(a) Notice are only estimates and are not being provided for tax reporting purposes. The actual amounts and sources of the amounts for tax reporting purposes will depend upon the Fund's investment experience during the remainder of its fiscal year and may be subject to changes based on tax regulations. The Fund will send you a Form 1099–DIV for the calendar year that will tell you how to report these distributions for Federal income tax purposes."

Such disclosure shall be made in a type size at least as large as and as prominent as any other information in the 19(a) Notice and placed on the same page in close proximity to the amount and the sources of the distribution;

2. On the inside front cover of each report to stockholders under Rule 30e–1 under the Act, the Fund will:

(a) Describe the terms of the Plan (including the fixed amount or fixed percentage of the distributions and the frequency of the distributions);

(b) Include the disclosure required by condition B.1.(b)(1) above;

(c) State, if applicable, that the Plan provides that the Board may amend or terminate the Plan at any time without prior notice to Fund stockholders; and

(d) Describe any reasonably foreseeable circumstances that might cause the Fund to terminate the Plan and any reasonably foreseeable consequences of such termination; and

3. Each report provided to stockholders under Rule 30e–1 under the Act and each prospectus filed with the Commission on Form N–2 under the Act, will provide the Fund's total return in relation to changes in NAV in the financial highlights table and in any discussion about the Fund's total return.

*C. Disclosure to Stockholders, Prospective Stockholders and Third Parties*

1. Each Fund will include the information contained in the relevant 19(a) Notice, including the disclosure required by condition B.1.(b) above, in any written communication (other than a communication on Form 1099) about the Plan or distributions under the Plan by the Fund, or agents that the Fund has authorized to make such communication on the Fund's behalf, to any Fund common stockholder, prospective common stockholder or third-party information provider;

2. The Fund will issue, contemporaneously with the issuance of any 19(a) Notice, a press release containing the information in the 19(a) Notice and file with the Commission the information contained in such 19(a) Notice, including the disclosure required by condition B.1.(b) above, as an exhibit to its next filed Form N–CSR; and

[5] In order to rely on the order, a future Fund must satisfy each of the foregoing representations except that such representations will be made in respect of actions by the Board of such future Fund and will be made at a future time.

[6] The disclosure in this condition B.1.(b)(2) will be included only if the current distribution or the fiscal year-to-date cumulative distributions are estimated to include a return of capital.

3. The Fund will post prominently a statement on its (or its Adviser's) Web site containing the information in each 19(a) Notice, including the disclosure required by condition B.1.(b) above, and maintain such information on such Web site for at least 24 months.

*D. Delivery of 19(a) Notices to Beneficial Owners*

If a broker, dealer, bank or other person ("Financial Intermediary") holds common stock issued by a Fund in nominee name, or otherwise, on behalf of a beneficial owner, the Fund:

1. Will request that the Financial Intermediary, or its agent, forward the 19(a) Notice to all beneficial owners of the Fund's shares held through such Financial Intermediary;

2. Will provide, in a timely manner, to the Financial Intermediary, or its agent, enough copies of the 19(a) Notice assembled in the form and at the place that the Financial Intermediary, or its agent, reasonably requests to facilitate the Financial Intermediary's sending of the 19(a) Notice to each beneficial owner of the Fund's shares; and

3. Upon the request of any Financial Intermediary, or its agent, that receives copies of the 19(a) Notice, will pay the Financial Intermediary, or its agent, the reasonable expenses of sending the 19(a) Notice to such beneficial owners.

*E. Additional Board Determinations for Funds Whose Common Stock Trades at a Premium*

If:

1. A Fund's common stock has traded on the stock exchange on which it primarily trades at the time in question at an average premium to NAV equal to or greater than 10%, as determined on the basis of the average of the discount or premium to NAV of the Fund's common stock as of the close of each trading day over a 12-week rolling period (each such 12-week rolling period ending on the last trading day of each week); and

2. The Fund's annualized distribution rate for such 12-week rolling period, expressed as a percentage of NAV as of the ending date of such 12-week rolling period, is greater than the Fund's average annual total return in relation to the change in NAV over the 2-year period ending on the last day of such 12-week rolling period; then:

(a) At the earlier of the next regularly scheduled meeting or within four months of the last day of such 12-week rolling period, the Board including a majority of the Independent Directors:

(1) Will request and evaluate, and the Fund's Adviser will furnish, such information as may be reasonably necessary to make an informed determination of whether the Plan should be continued or continued after amendment;

(2) Will determine whether continuation, or continuation after amendment, of the Plan is consistent with the Fund's investment objective(s) and policies and is in the best interests of the Fund and its stockholders, after considering the information in condition E.2.(a)(1) above; including, without limitation: (A) Whether the Plan is accomplishing its purpose(s); (B) the reasonably foreseeable material effects of the Plan on the Fund's long-term total return in relation to the market price and NAV of the Fund's common stock; and (C) the Fund's current distribution rate, as described in condition E.2 above, compared with the Fund's average annual taxable income or total return over the 2-year period, as described in condition E.2, or such longer period as the Board deems appropriate; and

(3) Based upon that determination, will approve or disapprove the continuation, or continuation after amendment, of the Plan; and

(b) The Board will record the information it considers, including its consideration of the factors listed in condition E.2.(a)(2) above, and the basis for its approval or disapproval of the continuation, or continuation after amendment, of the Plan in its meeting minutes, which must be made and preserved for a period of not less than six years from the date of such meeting, the first two years in an easily accessible place.

*F. Public Offerings*

A Fund will not make a public offering of the Fund's common stock other than:

1. A rights offering below NAV to holders of the Fund's common stock;

2. An offering in connection with a dividend reinvestment plan, merger, consolidation, acquisition, spin-off or reorganization of the Fund; or

3. An offering other than an offering described in conditions F.1 and F.2 above, provided that, with respect to such other offering:

(a) The Fund's annualized distribution rate for the six months ending on the last day of the month ended immediately prior to the most recent distribution record date,[7] expressed as a percentage of NAV as of such date, is no more than 1 percentage point greater than the Fund's average annual total return for the 5-year period ending on such date;[8] and

(b) The transmittal letter accompanying any registration statement filed with the Commission in connection with such offering discloses that the Fund has received an order under Section 19(b) to permit it to make periodic distributions of long-term capital gains with respect to its common stock as frequently as twelve times each year, and as frequently as distributions are specified by or determined in accordance with the terms of any outstanding preferred stock as such Fund may issue.

*G. Amendments to Rule 19b–1*

The requested order will expire on the effective date of any amendments to Rule 19b–1 that provide relief permitting certain closed-end investment companies to make periodic distributions of long-term capital gains with respect to their outstanding common stock as frequently as twelve times each year.

For the Commission, by the Division of Investment Management, under delegated authority.

**Florence E. Harmon,**

*Deputy Secretary.*

[FR Doc. 2010–4908 Filed 3–8–10; 8:45 am]

**BILLING CODE 8011–01–P**

[7] If a Fund has been in operation fewer than six months, the measured period will begin immediately following the Fund's first public offering.

[8] If a Fund has been in operation fewer than five years, the measured period will begin immediately following the Fund's first public offering.

## SECURITIES AND EXCHANGE COMMISSION

### Sunshine Act Meeting

Notice is hereby given, pursuant to the provisions of the Government in the Sunshine Act, Public Law 94–409, that the Securities and Exchange Commission will hold a Closed Meeting on Thursday, March 11, 2010 at 2 p.m.

Commissioners, Counsel to the Commissioners, the Secretary to the Commission, and recording secretaries will attend the Closed Meeting. Certain staff members who have an interest in the matters also may be present.

The General Counsel of the Commission, or his designee, has certified that, in his opinion, one or more of the exemptions set forth in 5 U.S.C. 552b(c)(3), (5), (7), 9(B) and (10) and 17 CFR 200.402(a)(3), (5), (7), 9(ii) and (10), permit consideration of the scheduled matters at the Closed Meeting.

Commissioner Casey, as duty officer, voted to consider the items listed for the Closed Meeting in a closed session.

The subject matter of the Closed Meeting scheduled for Thursday, March 11, 2010 will be: Formal order of investigation; institution and settlement of injunctive actions; institution and settlement of administrative proceedings; an adjudicatory matter; and other matters relating to enforcement proceedings.

At times, changes in Commission priorities require alterations in the scheduling of meeting items.

For further information and to ascertain what, if any, matters have been added, deleted or postponed, please contact: The Office of the Secretary at (202) 551–5400.

Dated: March 4, 2010.

**Elizabeth M. Murphy,**

*Secretary.*

[FR Doc. 2010–5053 Filed 3–5–10; 11:15 am]

**BILLING CODE 8011–01–P**

## SECURITIES AND EXCHANGE COMMISSION

**[Release No. 34–61629; File No. SR–NYSEAmex–2010–18)**

## Self-Regulatory Organizations; NYSE Amex LLC; Notice of Filing of Proposed Rule Change Relating to the Designation of a "Professional Customer"

March 2, 2010.

Pursuant to Section 19(b)(1) [1] of the Securities Exchange Act of 1934 (the "Act") [2] and Rule 19b–4 thereunder,[3] notice is hereby given that, on February 25, 2010, NYSE Amex LLC ("NYSE Amex" or the "Exchange") filed with the Securities and Exchange Commission (the "Commission") the proposed rule change as described in Items I, II, and III below, which Items have been prepared by the self-regulatory organization. The Commission is publishing this notice to solicit comments on the proposed rule change from interested persons.

### I. Self-Regulatory Organization's Statement of the Terms of Substance of the Proposed Rule Change

The Exchange proposes to designate any Customer that places more than 390 orders in listed options per day on average during a calendar month for its own beneficial account(s) as a "Professional Customer." The text of the proposed rule change is attached as Exhibit 5 to the 19b–4 form. A copy of this filing is available on the Exchange's Web site at *http://www.nyse.com*, at the Exchange's principal office and at the Commission's Public Reference Room.

### II. Self-Regulatory Organization's Statement of the Purpose of, and Statutory Basis for, the Proposed Rule Change

In its filing with the Commission, the self-regulatory organization included statements concerning the purpose of, and basis for, the proposed rule change and discussed any comments it received on the proposed rule change. The text of those statements may be examined at the places specified in Item IV below. The Exchange has prepared summaries, set forth in sections A, B, and C below, of the most significant parts of such statements.

*A. Self-Regulatory Organization's Statement of the Purpose of, and Statutory Basis for, the Proposed Rule Change*

1. Purpose

Under NYSE Amex rules, a "Customer" is an individual or organization that is not a Broker/Dealer.[4] This term is used in specific NYSE Amex rules that provide certain marketplace advantages to Customer orders over non-customer orders (*e.g.,* orders for the account of ATP holders or broker/dealers). In particular, under NYSE Amex rules, subject to certain exceptions, (i) Customer orders are given priority over non-customer orders and Market-Maker quotes at the same price,[5] and (ii) ATP holders are generally not charged a transaction fee for the execution of Customer orders. The purpose of providing these marketplace advantages to Customer orders is to attract retail investor order flow to the Exchange by leveling the playing field for retail investors over market professionals[6] and to provide competitive pricing.

With respect to these NYSE Amex marketplace advantages, the Exchange does not believe the definition of Customer versus a non-Customer properly distinguishes between non-professional retail investors and certain professionals. The Exchange believes that providing marketplace advantages based upon whether the order is for the account of a participant that is a registered Broker/Dealer is no longer appropriate in today's marketplace because some non-broker-dealer individuals and entities have access to information and technology that enables them to professionally trade listed options in the same manner as a broker or dealer in securities.[7] These individual traders and entities (collectively, "Professional Customers") have the same technological and informational advantages over retail investors as broker-dealers trading for their own account, which enables them to compete effectively with broker-dealer orders and market maker quotes for execution opportunities in the NYSE Amex marketplace.[8]

The Exchange therefore does not believe that it is consistent with fair competition for these professional account holders to continue to receive the same marketplace advantages as retail investors over Broker/Dealers trading on NYSE Amex. Moreover, because Customer orders at the same price are executed in time priority, retail investors are prevented from fully benefiting from the priority advantage when Professional Customers are afforded Customer order priority.

Accordingly, the Exchange is seeking to adopt a new term that will be used to more appropriately provide NYSE Amex marketplace advantages to retail investors on NYSE Amex. Under the proposal, a "Professional Customer" will

[1] 15 U.S.C. 78s(b)(1).

[2] 15 U.S.C. 78a.

[3] 17 CFR 240.19b–4.

[4] *See* NYSE Amex Rule 900.2NY(18).

[5] *See, e.g.,* NYSE Amex Rule 963NY Priority and Order Allocation Procedures—Open Outcry, 963.1NY Complex Order Transactions, 964NY Display, Priority and Order Allocation—Trading Systems, and 980NY(b) Priority of Complex Orders in the Consolidated Book.

[6] Market professionals have access to sophisticated trading systems that contain functionality not available to retail investors, including things such as continuously updated pricing models based on real-time streaming data, access to multiple markets simultaneously, and order and risk management tools.

[7] For example, some Broker/Dealers provide professional customers with multi-screened trading stations equipped with trading technology that allows the trader to monitor and place orders on all seven options exchanges simultaneously. These trading stations also provide compliance filters, order management tools, the ability to place orders in the underlying securities, and market data feeds. *See* Securities Exchange Act Releases 59287 (January 23, 2009), 74 FR 5694 (January 30, 2009) (SR–ISE–2006–26) (order approving International Securities Exchange ("ISE") proposal to introduce priority customer and professional orders) and 57254 (February 1, 2008), 73 FR 7345(February 7, 2008) (SR–ISE–2006–26) (notice of ISE proposal to introduce priority customer and professional orders) at note 8, *See also* Securities Exchange Act Release 61198 (December 17, 2009), 74 FR 68880 (December 29, 2009) (SR–CBOE–2009–078) (order approving CBOE proposal to introduce Professional Customers).

[8] Market Makers enter quotes based on the theoretical value of the option, which moves with various factors in their pricing models, such as the value of the underlying security. Professional customers place and cancel orders in relation to an option's theoretical value in much the same manner as a Market Maker. This is evidenced by the entry of limit orders that join the best bid or offer and by a very high rate of orders that are entered and cancelled. In contrast, retail investors who enter orders as part of an investment strategy (such as a buy/write or directional trade) most frequently enter marketable orders or limit orders that they do not cancel and replace. See, *e.g.,* Securities Exchange Act Release 57254 at note 9.

be defined in proposed Rule 900.2NY (18A) as a person or entity that (i) is not a broker or dealer in securities, and (ii) places more than 390 orders in listed options per day on average during a calendar month for its own beneficial account(s). Under the proposal, a Professional Customer will be treated in the same manner as a broker or dealer in securities for purposes of NYSE Amex Rules 900.3NY(j) (Facilitation Order), 904G(f) (FLEX Trading Procedures and Principles—Crossing Limitations), 934NY (Crossing), 934.1NY (Facilitation Cross Transactions), 934.2NY (At-Risk Cross Transactions), 934.3NY (Solicitation), 963NY (Priority and Order Allocation Procedures—Open Outcry), 963.1NY (Complex Order Transactions), 964NY (Display, Priority and Order Allocation—Trading Systems), 964.2NY(b)(1)(iii) (Participation Entitlement of Specialists and e-Specialists), 964.2NY(b)(3)(B) (Allocation of Participation Entitlement Amongst Specialist Pool), 980NY(b) (Electronic Complex Order Trading), Rule 995NY(b) (Prohibited Conduct—Limit Orders) and the Exchange's schedule of fees.

The use of this new term for purposes of the above-referenced execution rules will result in Professional Customer account holders participating in NYSE Amex's allocation process on equal terms with Broker/Dealer orders. The proposal will not otherwise affect non-Broker/Dealer individuals or entities under NYSE Amex rules. For example, NYSE Amex will provide the same away-market protection for all Customer orders, including non-Broker/Dealer orders that are included in the definition of "Professional Customer" orders.

In order to properly represent orders entered on the Exchange according to the new definitions, ATP holders will be required to indicate whether Customer orders are "Professional Customer" orders.[9] To comply with this requirement, ATP holders will be required to review their customers' activity on at least a quarterly basis to determine whether orders that are not for the account of a broker or dealer should be represented as Customer orders or Professional Customer orders.[10]

Lastly, the Exchange intends to establish, via a separate rule filing, transaction fees applicable to Professional Customers. The Exchange will not commence the Professional Customer program until such fees are in place.

Section 11(a) of the Act prohibits any member of a national securities exchange from effecting transactions on that exchange for its own account, the account of an associated person, or an account over which it or its associated persons exercises discretion unless an exception applies.[11] Section 11(a)(1) contains a number of exceptions for principal transactions by members and their associated persons. One such exception, set forth in subparagraph (G) of Section 11(a)(1) and in Rule 11a1–1(T),[12] permits any transaction for a member's own account provided, among other things, that the transaction yields priority, parity, and precedence to orders for the account of persons who are not member or associated with members of the exchange. Exchange rules, therefore, may require members to yield priority to the orders of non-ATP Holders, including Customers, to satisfy this exception to Section 11(a).[13] Another exception permits market makers to effect transactions on exchanges in which they are members.[14]

In addition to the exceptions noted above, Rule 11a2–2(T) under the Act[15] provides exchange members with an exception from the prohibitions in Section 11(a). Rule 11a2–2(T), known as the "effect versus execute" rule, permits an exchange member, subject to certain conditions, to effect transactions for its own account, the account of an associated person, or an account with respect to which it or an associated person thereof exercises investment discretion (collectively "covered accounts") by arranging for an unaffiliated member to execute the transaction on the exchange.

To comply with the "effect versus execute" rule's conditions, a member: (i) Must transmit the order from off the exchange floor; (ii) may not participate in the execution of the transaction once it has been transmitted to the member performing the execution;[16] (iii) may not be affiliated with the executing member; and (iv) with respect to an account over which the member has investment discretion, neither the member nor its associated person may retain any compensation in connection with effecting the transaction except as provided in the rule.[17]

The Exchange does not believe that its proposal relating to Professional Customer orders would affect the availability of the exceptions to Section 11(a) of the Act, including the exceptions in subparagraph (G) of Section 11(a) and in Rules 11a1–1(T) and 11a2–2(T), as are currently available.[18]

The Exchange believes that identifying Professional Customer account holders based upon the average number of orders entered for a beneficial account is an appropriately objective approach that will reasonably distinguish such persons and entities from retail investors. The Exchange proposes the threshold of 390 orders per day on average over a calendar month because it believes it far exceeds the number of orders that are entered by retail investors in a single day,[19] while being a sufficiently low number of orders to cover the Professional account

[9] The Exchange intends to require firms to identify Professional Customer orders submitted electronically to the system by identifying them with the number "8" in the customer type field—a mandatory field required for order entry. Manual orders submitted outside the electronic system will be marked with an origin code of "PC." These Professional Customer identifiers will also flow through Exchange systems into audit trail and trade reporting data.

[10] Orders for any customer that had an average of more than 390 orders per day during any month of a calendar quarter must be represented as Professional Customer orders for the next calendar quarter. ATP Holders will be required to conduct a quarterly review and make any appropriate changes to the way in which they are representing orders within five days after the end of each calendar quarter. While members only will be required to review their accounts on a quarterly basis, if during a quarter the Exchange identifies a customer for which orders are being represented as Customer orders but that has averaged more than 390 orders per day during a month, the Exchange will notify the ATP Holder and the ATP Holder will be required to change the manner in which it is representing the customer's orders within five days.

[11] 15 U.S.C. 78k(a).

[12] 17 CFR 240.11a1–1(T).

[13] *See,* NYSE Amex Rule 910NY.

[14] Section 11(a)(1)(A).

[15] 17 CFR 240.11a2–2(T).

[16] The ATP Holder, however, may participate in clearing and settling the transaction.

[17] 17 CFR 240.11a2–2(T).

[18] *See* Securities Exchange Act Release No. 59546 (March 10, 2009), 74 FR 11144 (March 16, 2009) (SR–CBOE–2009–016).

[19] Three hundred ninety orders is equal to the total number of orders that a person would place in a day if that person entered one order every minute from market open to close. Many of the largest retail-oriented electronic brokers offer lower commission rates to customers they define as "active traders." Publicly available information from the websites for Charles Schwab, Fidelity, TD Ameritrade and optionsXpress all define an "active trader" as someone who executes only a few options trades per month. The highest required trading activity to qualify as an active trader among these four firms was 35 trades per quarter. See Securities Exchange Act Release 57254 at note 11 (which also notes that a study of one of the largest retail-oriented options brokerage firms indicated that on a typical trading day, options orders were entered with respect to 5922 different customer accounts. There was only one order entered with respect to 3765 of the 5922 different customer accounts on this day, and there were only 17 customer accounts with respect to which more than 10 orders were entered. The highest number of orders entered with respect to any one account over the course of an entire week was 27).

holders that are competing with Broker/Dealers in the NYSE Amex marketplace. In addition, basing the standard on the number of orders that are entered in listed options for a beneficial account(s) assures that Professional Customer account holders cannot inappropriately avoid the purpose of the rule by spreading their trading activity over multiple exchanges, and using an average number over a calendar month will prevent gaming of the 390 order threshold.

2. Statutory Basis

The Exchange believes that its proposal is consistent with Section 6(b) of the Act,[20] in general, and furthers the objectives of Section 6(b)(5) of the Act,[21] in particular, in that it is designed to prevent fraudulent and manipulative acts and practices, to promote just and equitable principles of trade, to remove impediments to and perfect the mechanism of a free and open market and a national market system, and, in general, to protect investors and the public interest. In particular, the proposal will assure that retail investors continue to receive the appropriate marketplace advantages in NYSE Amex marketplace, while furthering fair competition among marketplace professionals by treating them equally within the NYSE Amex marketplace.

*B. Self-Regulatory Organization's Statement on Burden on Competition*

The Exchange does not believe that the proposed rule change will impose any burden on competition that is not necessary or appropriate in furtherance of the purposes of the Act.

*C. Self-Regulatory Organization's Statement on Comments on the Proposed Rule Change Received From Members, Participants, or Others*

No written comments were solicited or received with respect to the proposed rule change.

**III. Date of Effectiveness of the Proposed Rule Change and Timing for Commission Action**

Within 35 days of the date of publication of this notice in the **Federal Register** or within such longer period (i) as the Commission may designate up to 90 days of such date if it finds such longer period to be appropriate and publishes its reasons for so finding or (ii) as to which the self-regulatory organization consents, the Commission will:

(A) By order approve such proposed rule change, or

(B) Institute proceedings to determine whether the proposed rule change should be disapproved.

**IV. Solicitation of Comments**

Interested persons are invited to submit written data, views, and arguments concerning the foregoing, including whether the proposed rule change is consistent with the Act. Comments may be submitted by any of the following methods:

*Electronic Comments*

- Use the Commission's Internet comment form (*http://www.sec.gov/rules/sro.shtml*); or
- Send an e-mail to *rule-comments@sec.gov.* Please include File Number SR–NYSEAmex–2010–18 on the subject line.

*Paper Comments*

- Send paper comments in triplicate to Elizabeth M. Murphy, Secretary, Securities and Exchange Commission, 100 F Street, NE., Washington, DC 20549–1090.

All submissions should refer to File Number SR–NYSEAmex–2010–18. This file number should be included on the subject line if e-mail is used. To help the Commission process and review your comments more efficiently, please use only one method. The Commission will post all comments on the Commission's Internet Web site (*http://www.sec.gov/rules/sro.shtml).* Copies of the submission, all subsequent amendments, all written statements with respect to the proposed rule change that are filed with the Commission, and all written communications relating to the proposed rule change between the Commission and any person, other than those that may be withheld from the public in accordance with the provisions of 5 U.S.C. 552, will be available for Web site viewing and printing in the Commission's Public Reference Room, 100 F Street, NE., Washington, DC 20549, on official business days between the hours of 10 a.m. and 3 p.m. Copies of the filing will also be available for inspection and copying at NYSE's principal office and on its Internet Web site at *http://www.nyse.com.* All comments received will be posted without change; the Commission does not edit personal identifying information from submissions. You should submit only information that you wish to make available publicly. All submissions should refer to File Number SR–NYSEAmex–2010–18 and should be submitted on or before March 30, 2010.

For the Commission, by the Division of Trading and Markets, pursuant to delegated authority.[22]

**Florence E. Harmon,**

*Deputy Secretary.*

[FR Doc. 2010–4909 Filed 3–8–10; 8:45 am]

BILLING CODE 8011–01–P

[20] 15 U.S.C. 78f(b).

[21] 15 U.S.C. 78f(b)(5).

[22] 17 CFR 200.30–3(a)(12).

## SECURITIES AND EXCHANGE COMMISSION

**[Release No. 34–61628; File No. SR–CBOE–2010–019]**

## Self-Regulatory Organizations; Chicago Board Options Exchange, Incorporated; Notice of Filing and Immediate Effectiveness of Proposed Rule Change Related to Multi-Class Broad Based Index Option Spread Orders

March 2, 2010.

Pursuant to Section 19(b)(1) of the Securities Exchange Act of 1934 ("Act"),[1] and Rule 19b–4 thereunder,[2] notice is hereby given that on February 18, 2010, the Chicago Board Options Exchange, Incorporated ("Exchange" or "CBOE") filed with the Securities and Exchange Commission ("Commission") the proposed rule change as described in Items I, II, and III below, which Items have been prepared by the Exchange. The Exchange filed the proposal as a "non-controversial" proposed rule change pursuant to Section 19(b)(3)(A)(iii) of the Act[3] and Rule 19b–4(f)(6) thereunder,[4] which renders the proposal effective upon filing with the Commission. The Commission is publishing this notice to solicit comments on the proposed rule change from interested persons.

**I. Self-Regulatory Organization's Statement of the Terms of Substance of the Proposed Rule Change**

The Exchange is proposing to amend its rule related to multi-class broad-based index option spreads to include options on index-linked securities (also known as exchange-traded notes ("ETNs")) within the definition of an eligible "broad-based index option." The text of the proposed rule change is available on the Exchange's Web site (*http://www.cboe.org/Legal*), at the Exchange's Office of the Secretary and at the Commission.

[1] 15 U.S.C. 78s(b)(1).

[2] 17 CFR 240.19b–4.

[3] 15 U.S.C. 78s(b)(3)(A)(iii).

[4] 17 CFR 240.19b–4(f)(6).

## II. Self-Regulatory Organization's Statement of the Purpose of, and Statutory Basis for, the Proposed Rule Change

In its filing with the Commission, the self-regulatory organization included statements concerning the purpose of and basis for the proposed rule change and discussed any comments it received on the proposed rule change. The text of those statements may be examined at the places specified in Item IV below. The Exchange has prepared summaries, set forth in sections A, B, and C below, of the most significant parts of such statements.

### *A. Self-Regulatory Organization's Statement of the Purpose of, and Statutory Basis for, the Proposed Rule Change*

1. Purpose

The Commission has approved CBOE's and other option exchanges' proposals to enable the listing and trading of options on ETNs.[5] Options trading has not commenced to date and is contingent upon the Commission's approval of The Options Clearing Corporation's ("OCC") proposed supplement to the Options Disclosure Document ("ODD") that will provide disclosure regarding options on index-linked securities.[6]

Prior to the commencement of trading options on ETNs, the Exchange is proposing to amend CBOE Rule 24.19, *Multi-Class Broad-Based Index Option Spread Orders,* to include options on ETNs within the definition of an eligible "broad-based index option" that may be subject to the multi-class spread trading procedures outlined in Rule 24.19.[7] Specifically, the definition of an eligible broad-based index option for purposes of Rule 24.19 will be amended to include an option on an ETN derived from a broad-based index that is determined by the Exchange to create an appropriate hedge with any other broad-based index option under Rule 24.19. This change to include ETNs is the same as an existing provision in the rule that provides that options on Units (also known as exchange-traded funds ("ETFs")) that are derived from broad-based indices that are determined by the Exchange to create an appropriate hedge with any other broad-based index option may be subject to the multi-class spread trading procedures.[8]

Without discounting the differences between ETFs and ETNs, the Exchange seeks to extend the trading conventions applicable to options on ETFs to options on ETNs. CBOE contends that the inclusion of options on ETNs within the broad-based index option definition for purposes of the multi-class broad-based index option spread trading procedures is consistent with what is currently permitted for options on ETFs.[9]

2. Statutory Basis

The basis under the Act for this proposed rule change is the requirement under Section 6(b)(5)[10] that an exchange have rules that are designed to promote just and equitable principles of trade, and to remove impediments to and perfect the mechanism for a free and open market and a national market system, and, in general, to protect investors and the public interest. In particular, the proposed rule change seeks to extend the application of the multi-class broad-based index option spread trading procedures under CBOE Rule 24.19 to ETNs in a manner that is consistent with what is currently permitted for ETFs.

### *B. Self-Regulatory Organization's Statement on Burden on Competition*

CBOE does not believe that the proposed rule change will impose any burden on competition not necessary or appropriate in furtherance of the purposes of the Act.

### *C. Self-Regulatory Organization's Statement on Comments on the Proposed Rule Change Received From Members, Participants, or Others*

The Exchange neither solicited nor received comments on the proposal.

## III. Date of Effectiveness of the Proposed Rule Change and Timing for Commission Action

Because the foregoing rule does not (i) significantly affect the protection of investors or the public interest; (ii) impose any significant burden on competition; and (iii) become operative for 30 days from the date on which it was filed, or such shorter time as the Commission may designate if consistent with the protection of investors and the public interest, provided that the self-regulatory organization has given the Commission written notice of its intent to file the proposed rule change at least five business days prior to the date of filing of the proposed rule change or such shorter time as designated by the Commission, the proposed rule change has become effective pursuant to Section 19(b)(3)(A) of the Act[11] and Rule 19b–4(f)(6) thereunder.[12] At any time within 60 days of the filing of such proposed rule change, the Commission may summarily abrogate such rule change if it appears to the Commission that such action is necessary or appropriate in the public interest, for the protection of investors, or otherwise in furtherance of the purposes of the Act.

## IV. Solicitation of Comments

Interested persons are invited to submit written data, views, and arguments concerning the foregoing, including whether the proposed rule change is consistent with the Act. Comments may be submitted by any of the following methods:

*Electronic Comments*

- Use the Commission's Internet comment form (*http://www.sec.gov/rules/sro.shtml*); or
- Send an e-mail to *rule-comments@sec.gov.* Please include File Number SR–CBOE–2010–019 on the subject line.

*Paper Comments*

- Send paper comments in triplicate to Elizabeth M. Murphy, Secretary, Securities and Exchange Commission, 100 F Street, NE., Washington, DC 20549–1090.

All submissions should refer to File Number SR–CBOE–2010–019. This file number should be included on the subject line if e-mail is used. To help the Commission process and review your comments more efficiently, please use only one method. The Commission will post all comments on the Commission's Internet Web site (*http://www.sec.gov/*

[5] *See e.g.,* Securities Exchange Act Release Nos. 58204 (July 22, 2008), 73 FR 43807 (July 28, 2008) (approving SR–CBOE–2008–64); 58203 (July 22, 2008), 73 FR 43812 (July 28, 2008) (approving SR–NYSEArca–2008–57); 58985 (November 10, 2008), 73 FR 72538 (November 28, 2008) (approving SR–ISE–2008–86).

[6] OCC previously received Commission approval to clear options based on Index-Linked Securities. *See* Securities Exchange Act Release No. 60872 (October 23, 2009), 74 FR 55878 (October 29, 2009) (SR–OCC–2009–14).

[7] Rule 24.19 sets for a procedure for trading multi-class spread orders for eligible broad-based index option classes. For purposes of Rule 24.19 only, the term "broad-based index option" means "(i) options on the Mini-NDX Index (MNX), Nasdaq-100 Index (NDX), S&P 100 Index (OEX and XEO), iShares S&P 100 Index Fund (OEF), Nasdaq-100 Tracking Stock (QQQ), and S&P 500 Index (SPX); and (ii) any other broad-based index option or option on exchange-traded fund shares derived from a broad-based index that is determined by the Exchange to create an appropriate hedge with any other Broad-Based Index Option under this Rule 24.19." *See* Rule 24.19(a)(1).

[8] The Exchange is also proposing a non-substantive change to the text of Rule 24.19(a)(1) to include a cross-reference to Units (another term for ETFs), which is defined under Interpretation and Policy .06 to CBOE Rule 5.3.

[9] *Id.*

[10] 15 U.S.C. 78f(b)(5).

[11] 15 U.S.C. 78s(b)(3)(A).

[12] 17 CFR 240.19b–4(f)(6).

*rules/sro.shtml*). Copies of the submission, all subsequent amendments, all written statements with respect to the proposed rule change that are filed with the Commission, and all written communications relating to the proposed rule change between the Commission and any person, other than those that may be withheld from the public in accordance with the provisions of 5 U.S.C. 552, will be available for Web site viewing and printing in the Commission's Public Reference Room, 100 F Street, NE., Washington, DC 20549, on official business days between the hours of 10 a.m. and 3 p.m. Copies of such filing also will be available for inspection and copying at the principal office of the Exchange. All comments received will be posted without change; the Commission does not edit personal identifying information from submissions. You should submit only information that you wish to make available publicly. All submissions should refer to File Number SR–CBOE–2010–019 and should be submitted on or before March 30, 2010.

For the Commission, by the Division of Trading and Markets, pursuant to delegated authority.[13]

**Florence E. Harmon,**

*Deputy Secretary.*

[FR Doc. 2010–4910 Filed 3–8–10; 8:45 am]

**BILLING CODE 8011–01–P**

[13] 17 CFR 200.30–3(a)(12).

## SECURITIES AND EXCHANGE COMMISSION

**[Release No. 34–61626; File No. SR–NYSE–2010–07]**

## Self-Regulatory Organizations; New York Stock Exchange, LLC; Notice of Filing and Immediate Effectiveness of Proposed Rule Change Amending NYSE Rule 476 To Add a Provision for Violations Relating to Failing To Observe High Standards of Commercial Honor and Just and Equitable Principles of Trade

March 2, 2010.

Pursuant to Section 19(b)(1)[1] of the Securities Exchange Act of 1934 (the "Act")[2] and Rule 19b–4 thereunder,[3] notice is hereby given that, on February 5, 2010, New York Stock Exchange LLC ("NYSE" or the "Exchange") filed with the Securities and Exchange Commission (the "Commission") the proposed rule change as described in Items I and II below, which Items have been prepared by the self-regulatory organization. The Commission is publishing this notice to solicit comments on the proposed rule change from interested persons.

[1] 15 U.S.C.78s(b)(1).

[2] 15 U.S.C. 78a.

[3] 17 CFR 240.19b–4.

### I. Self-Regulatory Organization's Statement of the Terms of Substance of the Proposed Rule Change

The Exchange proposes to amend NYSE Rule 476 to add a provision for violations relating to failing to observe high standards of commercial honor and just and equitable principles of trade. The text of the proposed rule change is available at the Exchange, the Commission's Public Reference Room, and *http://www.nyse.com.*

### II. Self-Regulatory Organization's Statement of the Purpose of, and Statutory Basis for, the Proposed Rule Change

In its filing with the Commission, the self-regulatory organization included statements concerning the purpose of, and basis for, the proposed rule change and discussed any comments it received on the proposed rule change. The text of those statements may be examined at the places specified in Item IV below. The Exchange has prepared summaries, set forth in sections A, B, and C below, of the most significant parts of such statements.

*A. Self-Regulatory Organization's Statement of the Purpose of, and Statutory Basis for, the Proposed Rule Change*

1. Purpose

In this filing, the New York Stock Exchange LLC ("NYSE" or the "Exchange") proposes to amend Rule 476 to add a provision for violations relating to failing to observe high standards of commercial honor and just and equitable principles of trade. The Commission previously approved an amendment to NYSE Rule 476 to delete subsection (a)(6), which concerned just and equitable principles of trade.[4] The rationale for that deletion was because NYSE adopted Rule 2010, which provided for the same content as the prior version of Rule 476(a)(6) and which harmonized the Exchange rule with the NYSE Amex LLC ("NYSE Amex") and Financial Industry Regulatory Authority, Inc. ("FINRA") standards for just and equitable principles of trade.

However, in deleting Rule 476(a)(6) and replacing it with Rule 2010, the Exchange inadvertently deleted the ability for the Exchange to bring charges relating to failing to observe high standards of commercial honor and just and equitable principles of trade against approved persons, principal executives, and employees of member organizations. As approved, NYSE Rule 2010 is applicable only to members and member organizations. Accordingly, the Exchange proposes to amend Rule 476, which has an enabling provision to bring charges against approved persons and employees of member organizations, to add subsection (a)(6) to cover the same content that was previously deleted. To ensure that the standards for just and equitable principles of trade are consistent across Exchange rules, NYSE Amex, and FINRA, the Exchange proposes to adopt rule text that mirrors the standard set forth in Rule 2010, which is virtually identical to NYSE Amex Equities Rule 2010 and FINRA Rule 2010. As proposed, NYSE Rule 476(a)(6) would read as follows: "failing to observe high standards of commercial honor and just and equitable principles of trade."

In adopting this revised rule text for Rule 476(a)(6), the Exchange would be able to bring a charge relating to failing to observe high standards of commercial honor and just and equitable principles of trade against not only members and member organizations, but also against principal executives, approved persons, and employees of member organizations. This proposal is consistent with FINRA Rule 2010 because under FINRA Rule 0140, persons associated with a FINRA member have the same duties and obligations as a member under FINRA rules. Accordingly, FINRA has the authority to charge an associated person with a violation of Rule 2010. By adding this standard to Rule 476(a)(6), the Exchange will similarly have the authority to charge an employee of a member organization with a violation relating to failing to observe high standards of commercial honor and just and equitable principles of trade.

To ensure full harmonization, the Exchange also proposes amending Rule 476(a)(5) and deleting the phrase "fraud or fraudulent acts" and replacing it with the rule text from Rule 2020 to provide that the Exchange can bring charges against an employee of a member organization for effecting any transaction in, or inducing the purchase or sale of, any security by means of any manipulative, deceptive or other fraudulent device or contrivance.

Finally, the Exchange proposes deleting the reference to "allied member," which no longer is a category

[4] *See* Securities Exchange [sic] Release No. 59965 (May 21, 2009), 74 FR 25783 (May 29, 2009) (SR–NYSE–2009–25).

at the Exchange, and replacing it with "principal executive."[5]

2. Statutory Basis

The statutory basis for the proposed rule change is Section 6(b)(5) of the Act[6] which requires the rules of an exchange to promote just and equitable principles of trade, to remove impediments to and perfect the mechanism of a free and open market and a national market system and, in general, to protect investors and the public interest. The proposed rule change also is designed to support the principles of Section 11A(a)(1)[7] of the Act in that it seeks to assure fair competition among brokers and dealers and among exchange markets. The Exchange believes this rule proposal ensures that it will be enabled to charge, as necessary, when a member, member organization, principal executive, approved person, or employee of a member organization fails to observe high standards of commercial honor and just and equitable principles of trade, as contemplated by the Act, or effects any transaction in, or induces the purchase or sale of, any security by means of any manipulative, deceptive or other fraudulent device or contrivance.

*B. Self-Regulatory Organization's Statement on Burden on Competition*

The Exchange does not believe that the proposed rule change will impose any burden on competition that is not necessary or appropriate in furtherance of the purposes of the Act.

*C. Self-Regulatory Organization's Statement on Comments on the Proposed Rule Change Received From Members, Participants or Others*

No written comments were solicited or received with respect to the proposed rule change.

## III. Date of Effectiveness of the Proposed Rule Change and Timing for Commission Action

The Exchange has filed the proposed rule change pursuant to Section 19(b)(3)(A)(iii) of the Act[8] and Rule 19b–4(f)(6) thereunder.[9] Because the proposed rule change does not: (i) Significantly affect the protection of investors or the public interest; (ii) impose any significant burden on competition; and (iii) become operative prior to 30 days from the date on which it was filed, or such shorter time as the Commission may designate, if consistent with the protection of investors and the public interest, the proposed rule change has become effective pursuant to Section 19(b)(3)(A) of the Act and Rule 19b–4(f)(6)(iii) thereunder.

A proposed rule change filed under Rule 19b–4(f)(6)[10] normally does not become operative prior to 30 days after the date of the filing. However, pursuant to Rule 19b–4(f)(6)(iii),[11] the Commission may designate a shorter time if such action is consistent with the protection of investors and the public interest. The Exchange has asked the Commission to waive the 30-day operative delay so that the proposal may become operative immediately upon filing. The Commission notes that the proposed rule change is restoring the Exchange's ability to discipline employees of member organizations under paragraphs (a)(5) and (a)(6) of Rule 476. The proposed rule change does not raise any new substantive issues and will harmonize NYSE Rules and FINRA Rules in this regard. For these reasons, the Commission believes that waiver of the 30-day operative delay is consistent with the protection of investors and the public interest. Therefore, the Commission designates the proposed rule change effective and operative upon filing.[12]

At any time within 60 days of the filing of the proposed rule change, the Commission may summarily abrogate such rule change if it appears to the Commission that such action is necessary or appropriate in the public interest, for the protection of investors, or otherwise in furtherance of the purposes of the Act.

## IV. Solicitation of Comments

Interested persons are invited to submit written data, views, and arguments concerning the foregoing, including whether the proposed rule change is consistent with the Act. Comments may be submitted by any of the following methods:

*Electronic Comments*

- Use the Commission's Internet comment form (*http://www.sec.gov/rules/sro.shtml);* or
- Send an e-mail to *rule-comments@sec.gov.* Please include File Number SR–NYSE–2010–07 on the subject line.

*Paper Comments:*

- Send paper comments in triplicate to Elizabeth M. Murphy, Secretary, Securities and Exchange Commission, 100 F Street, NE., Washington, DC 20549–1090.

All submissions should refer to File Number SR–NYSE–2010–07. This file number should be included on the subject line if e-mail is used. To help the Commission process and review your comments more efficiently, please use only one method. The Commission will post all comments on the Commission's Internet Web site (*http://www.sec.gov/rules/sro.shtml).* Copies of the submission,[13] all subsequent amendments, all written statements with respect to the proposed rule change that are filed with the Commission, and all written communications relating to the proposed rule change between the Commission and any person, other than those that may be withheld from the public in accordance with the provisions of 5 U.S.C. 552, will be available for Web site viewing and printing in the Commission's Public Reference Room, 100 F Street, NE., Washington, DC 20549, on official business days between the hours of 10 a.m. and 3 p.m. Copies of the filing also will be available for inspection and copying at the principal office of NYSE and on its Internet Web site at *http://www.nyse.com.* All comments received will be posted without change; the Commission does not edit personal identifying information from submissions. You should submit only information that you wish to make available publicly. All submissions should refer to File Number SR–NYSE–2010–07 and should be submitted on or before March 30, 2010.

For the Commission, by the Division of Trading and Markets, pursuant to delegated authority.[14]

**Florence E. Harmon,**

*Deputy Secretary.*

[FR Doc. 2010–4912 Filed 3–8–10; 8:45 am]

**BILLING CODE 8011–01–P**

[5] *See* Securities Exchange Act Release No. 58549 (Sept. 15, 2008), 73 FR 54444 (Sept. 19, 2008) (SR–NYSE–2008–80) (deleting the term "allied member" and replacing it with "principal executive").

[6] 15 U.S.C. 78f(b)(5).

[7] 15 U.S.C. 78k–1(a)(1).

[8] 15 U.S.C. 78s(b)(3)(A)(iii).

[9] 17 CFR 240.19b–4(f)(6).

[10] 17 CFR 240.19b–4(f)(6). In addition, Rule 19b–4(f)(6)(iii) requires that a self-regulatory organization submit to the Commission written notice of its intent to file the proposed rule change, along with a brief description and text of the proposed rule change, at least five business days prior to the filing of the proposed rule change, or such shorter time as designated by the Commission. The Commission notes that NYSE has satisfied the five-day pre-filing notice requirement.

[11] 17 CFR 240.19b–4(f)(6)(iii).

[12] For purposes only of waiving the 30-day operative delay, the Commission has considered the proposed rule's impact on efficiency, competition, and capital formation. *See* 15 U.S.C. 78c(f).

[13] The text of the proposed rule change is available on the Commission's Web site at *http://www.sec.gov/.*

[14] 17 CFR 200.30–3(a)(12).

## SECURITIES AND EXCHANGE COMMISSION

**[Release No. 34–61617; File No. SR–Phlx–2010–22]**

## Self-Regulatory Organizations; NASDAQ OMX PHLX, Inc.; Notice of Filing and Immediate Effectiveness of Proposed Rule Change Relating to Linkage Pilot

March 1, 2010.

Pursuant to Section 19(b)(1) of the Securities Exchange Act of 1934 (the "Act") [1] and Rule 19b–4 thereunder,[2] notice is hereby given that, on February 24, 2010, NASDAQ OMX PHLX, Inc. ("Phlx" or the "Exchange") filed with the Securities and Exchange Commission (the "Commission") the proposed rule change as described in Items I, II, and III below, which Items have been prepared by the self-regulatory organization. The Commission is publishing this notice to solicit comments on the proposed rule change from interested persons.

### I. Self-Regulatory Organization's Statement of the Terms of Substance of the Proposed Rule Change

The Exchange proposes to discontinue its current pilot program (the "pilot") relating to fees applicable to Principal Acting as Agent Orders ("P/A Orders") [3] and Principal Orders ("P Orders").[4] The text of the proposed rule change is available on Phlx's Web site at *http://www.nasdaqtrader.com,* on the Commission's Web site at *http://www.sec.gov,* at Phlx, and at the Commission's Public Reference Room.

### II. Self-Regulatory Organization's Statement of the Purpose of, and Statutory Basis for, the Proposed Rule Change

In its filing with the Commission, the self-regulatory organization included statements concerning the purpose of, and basis for, the proposed rule change and discussed any comments it received on the proposed rule change. The text of those statements may be examined at the places specified in Item IV below. The Exchange has prepared summaries, set forth in sections A, B, and C below, of the most significant parts of such statements.

*A. Self-Regulatory Organization's Statement of the Purpose of, and Statutory Basis for, the Proposed Rule Change*

1. Purpose

The purpose of the proposed rule change is to discontinue the current pilot program related to transaction fees for P/A Orders and P Orders sent to the Exchange via the Intermarket Option Linkage ("Linkage") under the former Plan for the Purpose of Creating and Operating an Intermarket Linkage ("Linkage Plan").[5] The current pilot is set to expire July 31, 2010.[6]

On June 17, 2008, the Exchange filed an executed copy of the Options Order Protection and Locked/Crossed Market Plan ("Plan"), joining all other approved options markets in adopting the Plan.[7] The Plan requires each options exchange to adopt rules implementing various requirements specified in the Plan.[8]

The Plan replaces the Linkage Plan. The Linkage Plan required Participating Options Exchanges to operate a stand-alone system or "Linkage" for sending order-flow between exchanges to limit trade-throughs.[9] The Options Clearing Corporation ("OCC") operated the Linkage system (the "System").[10] The Exchange adopted various new rules in connection with the Plan to avoid trade-throughs and locked markets, among other things.[11] The Exchange currently offers private routing directly to away markets.[12]

The pilot, which is set to expire on July 31, 2010, relates to fees charged by the Exchange for both P/A and P Orders. The Exchange currently charges $.45 per option contract for P Orders sent to the Exchange and $0.30 per option contract for P/A Orders. The current pilot program has been renewed periodically over several years.[13] Because there are no longer any participant exchanges to the Linkage Plan who send Linkage P or P/A Orders, the Exchange proposes to discontinue the pilot.

The Exchange also proposes to amend its Fee Schedule to remove all references to Linkage fees.

2. Statutory Basis

The Exchange believes that its proposal is consistent with Section 6(b) of the Act [14] in general, and furthers the objectives of Section 6(b)(5) of the Act [15] in particular, in that it is designed to promote just and equitable principles of trade, to remove impediments to and perfect the mechanism of a free and open market and a national market system, and, in general to protect investors and the public interest, by removing all references to Linkage in the Fee Schedule and to clarify that Linkage fees are no longer applicable.

*B. Self-Regulatory Organization's Statement on Burden on Competition*

The Exchange does not believe that the proposed rule change will impose any burden on competition not necessary or appropriate in furtherance of the purposes of the Act.

---

[1] 15 U.S.C. 78s(b)(1).

[2] 17 CFR 240.19b–4.

[3] A P/A Order is an order for the principal account of a specialist (or equivalent entity on another participant exchange that is authorized to represent Public Customer orders), reflecting the terms of a related unexecuted Public Customer order for which the specialist is acting as agent. *See* Exchange Rule 1088, Phase Out of Intermarket Linkage Rules.

[4] A Principal Order is an order for the principal account of an Eligible Market Maker and is not a P/A Order. *See* Exchange Rule 1088, Phase Out of Intermarket Linkage Rules.

[5] *See* Securities Exchange Act Release No. 60363 (July 22, 2009), 74 FR 37270 (July 28, 2009) (SR–Phlx–2009–61). Linkage was governed by the Options Linkage Authority under the conditions set forth under the Plan for the Purpose of Creating and Operating an Intermarket Option Linkage approved by the Commission. The registered U.S. options markets are linked together on a real-time basis through a network capable of transporting orders and messages to and from each market.

[6] *See* Securities Exchange Act Release No. 60210 (July 1, 2009), 74 FR 32989 (July 9, 2009) (SR–Phlx–2009–53).

[7] *See* Securities Exchange Act Release Nos. 60405 (July 20, 2009) (National Market System Plan Relating to Options Order Protection and Locked/Crossed Markets). The Plan is a national market system plan proposed by the seven existing options exchanges and approved by the Commission. *See* Securities Exchange Act Release No. 59647 (March 30, 2009), 74 FR 15010 (April 2, 2009) (File No. 4–546) ("Plan Notice") and 60405 (July 30, 2009), 74 FR 39362 (August 6, 2009) (File No. 4–546) ("Plan Approval"). The seven options exchanges are: Chicago Board Options Exchange, Incorporated ("CBOE"); International Securities Exchange LLC ("ISE"); NASDAQ OMX BX, Inc. ("BOX"); The NASDAQ Stock Market LLC ("Nasdaq"); NYSE Amex LLC ("NYSE Amex"); NYSE Arca, Inc. ("NYSE Arca"); and Phlx (each exchange individually a "Participant" and, together, the "Participating Options Exchanges").

[8] *See* Securities Exchange Act Release No. 60363 (July 22, 2009), 74 FR 37270 (July 28, 2009) (SR–Phlx–2009–61). Linkage was governed by the Options Linkage Authority under the conditions set forth under the Plan for the Purpose of Creating and Operating an Intermarket Option Linkage approved by the Commission. The registered U.S. options markets are linked together on a real-time basis through a network capable of transporting orders and messages to and from each market.

[9] *See* footnote 7.

[10] *See* footnote 7.

[11] *See* footnote 7.

[12] *See* Exchange Rule 1080(m).

[13] *See* Securities Exchange Act Release Nos. 60210 (July 1, 2009), 74 FR 32989 (July 9, 2009) (SR–Phlx–2009–53); 58144 (July 11, 2008), 73 FR 41394 (July 18, 2008) (SR–Phlx–2008–49); 56166 (July 30, 2007), 72 FR 43312 (August 3, 2007) (SR–Phlx–2007–52); 54233 (July 27, 2006), 71 FR 44070 (August 3, 2006) (SR–Phlx–2006–44); 51257 (February 25, 2005), 70 FR 10736 (March 4, 2005) (SR–Phlx–2005–10); 50125 (July 30, 2004), 69 FR 47479 (August 5, 2004) (SR–Phlx–2004–44); 49163 (January 30, 2004), 69 FR 5885 (February 6, 2004) (SR–Phlx–2003–89); and 47953 (May 30, 2003), 68 FR 34027 (June 6, 2003) (SR–Phlx–2003–16).

[14] 15 U.S.C. 78f(b).

[15] 15 U.S.C. 78f(b)(5).

*C. Self-Regulatory Organization's Statement on Comments on the Proposed Rule Change Received From Members, Participants, or Others*

No written comments were either solicited or received.

**III. Date of Effectiveness of the Proposed Rule Change and Timing for Commission Action**

Because the foregoing proposed rule change: (i) Does not significantly affect the protection of investors or the public interest; (ii) does not impose any significant burden on competition; and (iii) by its terms, does not become operative for 30 days from the date on which it was filed, or such shorter time as the Commission may designate, if consistent with the protection of investors and the public interest, it has become effective pursuant to Section 19(b)(3)(A) of the Act [16] and Rule 19b–4(f)(6) thereunder.[17]

At any time within 60 days of the filing of the proposed rule change, the Commission may summarily abrogate such rule change if it appears to the Commission that such action is necessary or appropriate in the public interest, for the protection of investors, or otherwise in furtherance of the purposes of the Act.

**IV. Solicitation of Comments**

Interested persons are invited to submit written data, views, and arguments concerning the foregoing, including whether the proposed rule change is consistent with the Act. Comments may be submitted by any of the following methods:

*Electronic Comments*

- Use the Commission's Internet comment form (*http://www.sec.gov/rules/sro.shtml*); or
- Send an e-mail to *rule-comments@sec.gov.* Please include File Number SR–Phlx–2010–22 on the subject line.

*Paper Comments*

- Send paper comments in triplicate to Elizabeth M. Murphy, Secretary, Securities and Exchange Commission, 100 F Street, NE., Washington, DC 20549–1090.

All submissions should refer to File Number SR–Phlx–2010–22. This file number should be included on the subject line if e-mail is used. To help the Commission process and review your comments more efficiently, please use only one method. The Commission will post all comments on the Commission's Internet Web site (*http://www.sec.gov/rules/sro.shtml*). Copies of the submission, all subsequent amendments, all written statements with respect to the proposed rule change that are filed with the Commission, and all written communications relating to the proposed rule change between the Commission and any person, other than those that may be withheld from the public in accordance with the provisions of 5 U.S.C. 552, will be available for Web site viewing and printing in the Commission's Public Reference Room on official business days between the hours of 10 a.m. and 3 p.m. Copies of such filing also will be available for inspection and copying at the principal office of the Exchange. All comments received will be posted without change; the Commission does not edit personal identifying information from submissions. You should submit only information that you wish to make available publicly. All submissions should refer to File Number SR–Phlx–2010–22 and should be submitted on or before March 30, 2010.

For the Commission, by the Division of Trading and Markets, pursuant to delegated authority.[18]

**Florence E. Harmon,**

*Deputy Secretary.*

[FR Doc. 2010–4913 Filed 3–8–10; 8:45 am]

**BILLING CODE 8011–01–P**

[16] 15 U.S.C. 78s(b)(3)(A).

[17] 17 CFR 240.19b–4(f)(6). In addition, Rule 19b–4(f)(6)(iii) requires the self-regulatory organization to submit to the Commission written notice of its intent to file the proposed rule change, along with a brief description and text of the proposed rule change, at least five business days prior to the date of filing of the proposed rule change, or such shorter time as designated by the Commission. The Exchange has satisfied this requirement.

[18] 17 CFR 200.30–3(a)(12).

---

## SECURITIES AND EXCHANGE COMMISSION

**[Release No. 34–61627; File No. SR–NYSEAMEX–2010–11]**

## Self-Regulatory Organizations; Notice of Filing and Immediate Effectiveness of Proposed Rule Change by NYSE Amex LLC Amending NYSE Amex Rule 476 To Add a Provision for Violations Relating To Failing to Observe High Standards of Commercial Honor and Just and Equitable Principles of Trade

March 2, 2010.

Pursuant to Section 19(b)(1)[1] of the Securities Exchange Act of 1934 (the "Act") [2] and Rule 19b–4 thereunder,[3] notice is hereby given that on February 9, 2010, NYSE Amex LLC (the "Exchange" or "NYSE Amex") filed with the Securities and Exchange Commission (the "Commission") the proposed rule change as described in Items I and II below, which Items have been prepared by the self-regulatory organization. The Commission is publishing this notice to solicit comments on the proposed rule change from interested persons.

**I. Self-Regulatory Organization's Statement of the Terms of Substance of the Proposed Rule Change**

The Exchange proposes to amend NYSE Amex Rule 476 to add a provision for violations relating to failing to observe high standards of commercial honor and just and equitable principles of trade. The text of the proposed rule change is available at the Exchange, the Commission's Public Reference Room, and *http://www.nyse.com.*

**II. Self-Regulatory Organization's Statement of the Purpose of, and Statutory Basis for, the Proposed Rule Change**

In its filing with the Commission, the self-regulatory organization included statements concerning the purpose of, and basis for, the proposed rule change and discussed any comments it received on the proposed rule change. The text of those statements may be examined at the places specified in Item IV below. The Exchange has prepared summaries, set forth in sections A, B, and C below, of the most significant parts of such statements.

*A. Self-Regulatory Organization's Statement of the Purpose of, and the Statutory Basis for, the Proposed Rule Change*

1. Purpose

In this filing, NYSE Amex LLC ("NYSE Amex" or the "Exchange") proposes to amend NYSE Amex Rule 476 to add a provision for violations relating to failing to observe high standards of commercial honor and just and equitable principles of trade. The Commission previously approved an amendment to NYSE Amex Rule 476 to delete subsection (a)(6), which concerned just and equitable principles of trade.[4] The rationale for that deletion was because NYSE Amex adopted an equities rule—NYSE Amex Equities Rule 2010—that provided for the same content as the prior version of Rule 476(a)(6) and that harmonized the Exchange rule with the New York Stock

[1] 15 U.S.C.78s(b)(1).

[2] 15 U.S.C. 78a.

[3] 17 CFR 240.19b–4.

[4] *See* Securities Exchange [sic] Release No. 59975 (May 27, 2009) [sic], 74 FR 26449 (June 2, 2009) (SR–NYSEAmex–2009–26) [sic].

Exchange LLC ("NYSE") and Financial Industry Regulatory Authority, Inc. ("FINRA") standards for just and equitable principles of trade.

However, in deleting Rule 476(a)(6) as part of the NYSE Amex equities harmonization process, the Exchange inadvertently deleted this standard for its options trading platform. Accordingly, the Exchange proposes to amend Rule 476 to add subsection (a)(6) to cover the same content that was previously deleted. To ensure that the standards for just and equitable principles of trade are consistent across the Exchange, NYSE, and FINRA, the Exchange proposes to adopt rule text that mirrors the standard set forth in NYSE Amex Equities Rule 2010, which is virtually identical to NYSE Rule 2010 and FINRA Rule 2010. As proposed, NYSE Amex Rule 476(a)(6) would read as follows: "failing to observe high standards of commercial honor and just and equitable principles of trade."

In adopting this revised rule text for Rule 476(a)(6), the Exchange would also be able to bring a charge relating to failing to observe high standards of commercial honor and just and equitable principles of trade against not only members and member organizations, but also against principal executives, approved persons, and employees of member organizations. This proposal is consistent with FINRA Rule 2010 because under FINRA Rule 0140, persons associated with a FINRA member have the same duties and obligations as a member under FINRA rules. Accordingly, FINRA has the authority to charge an associated person with a violation of Rule 2010. By adding this standard to Rule 476(a)(6), the Exchange will similarly have the authority to charge an employee of a member organization with a violation relating to failing to observe high standards of commercial honor and just and equitable principles of trade.

To ensure full harmonization, the Exchange also proposes amending Rule 476(a)(5) and deleting the phrase "fraud or fraudulent acts" and replacing it with the rule text from NYSE Amex Equities Rule 2020 to provide that the Exchange can bring charges against an employee of a member organization for effecting any transaction in, or inducing the purchase or sale of, any security by means of any manipulative, deceptive or other fraudulent device or contrivance.

Finally, the Exchange proposes fixing a typographical error and replacing the term "principle" with "principal" in connection with the rule text relating to "principal executives."

2. Statutory Basis

The statutory basis for the proposed rule change is Section 6(b)(5) of the Act [5] which requires the rules of an exchange to promote just and equitable principles of trade, to remove impediments to and perfect the mechanism of a free and open market and a national market system and, in general, to protect investors and the public interest. The proposed rule change also is designed to support the principles of Section 11A(a)(1) [6] of the Act in that it seeks to assure fair competition among brokers and dealers and among exchange markets. The Exchange believes this rule proposal ensures that it will be enabled to charge, as necessary, when a member, member organization, principal executive, approved person, or employee of a member organization fails to observe high standards of commercial honor and just and equitable principles of trade, as contemplated by the Act, or effects any transaction in, or induces the purchase or sale of, any security by means of any manipulative, deceptive or other fraudulent device or contrivance.

*B. Self-Regulatory Organization's Statement on Burden on Competition*

The Exchange does not believe that the proposed rule change will impose any burden on competition that is not necessary or appropriate in furtherance of the purposes of the Act.

*C. Self-Regulatory Organization's Statement on Comments on the Proposed Rule Change Received From Members, Participants, or Others*

No written comments were solicited or received with respect to the proposed rule change.

## III. Date of Effectiveness of the Proposed Rule Change and Timing for Commission Action

The Exchange has filed the proposed rule change pursuant to Section 19(b)(3)(A)(iii) of the Act [7] and Rule 19b–4(f)(6) thereunder.[8] Because the proposed rule change does not: (i) significantly affect the protection of investors or the public interest; (ii) impose any significant burden on competition; and (iii) become operative prior to 30 days from the date on which it was filed, or such shorter time as the Commission may designate, if consistent with the protection of investors and the public interest, the proposed rule change has become effective pursuant to Section 19(b)(3)(A) of the Act and Rule 19b–4(f)(6)(iii) thereunder.

A proposed rule change filed under Rule 19b–4(f)(6)[9] normally does not become operative prior to 30 days after the date of the filing. However, pursuant to Rule 19b4(f)(6)(iii),[10] the Commission may designate a shorter time if such action is consistent with the protection of investors and the public interest. The Exchange has asked the Commission to waive the 30-day operative delay so that the proposal may become operative immediately upon filing. The Commission notes that the proposed rule change is restoring rule text that was inadvertently deleted and is providing the Exchange with the authority to bring charges against an employee of a member organization under paragraphs (a)(5) and (a)(6) of NYSEAmex Rule 476. The proposed rule change does not raise any new substantive issues and will harmonize NYSE, NYSEAmex and Finra's rules in this regard. For these reasons, the Commission believes that the waiver of the 30-day operative date is consistent with the protection of investors and the public interest.[11]

At any time within 60 days of the filing of the proposed rule change, the Commission may summarily abrogate such rule change if it appears to the Commission that such action is necessary or appropriate in the public interest, for the protection of investors, or otherwise in furtherance of the purposes of the Act.

## IV. Solicitation of Comments

Interested persons are invited to submit written data, views, and arguments concerning the foregoing, including whether the proposed rule change is consistent with the Act. Comments may be submitted by any of the following methods:

*Electronic Comments*

- Use the Commission's Internet comment form (*http://www.sec.gov/rules/sro.shtml*); or

[5] 15 U.S.C. 78f(b)(5).

[6] 15 U.S.C. 78k–1(a)(1).

[7] 15 U.S.C. 78s(b)(3)(A)(iii).

[8] 17 CFR 240.19b–4(f)(6).

[9] 17 CFR 240.19b–4(f)(6). In addition, Rule 19b–4(f)(6)(iii) requires that a self-regulatory organization submit to the Commission written notice of its intent to file the proposed rule change, along with a brief description and test of the proposed rule change, at least 5 business days prior to the date of filing of the proposed rule change, or such shorter time as designated by the Commission. The Commission notes that the Exchange has satisfied the five-day pre-filing notice requirement.

[10] 17 CFR 240.19b–4(f)(6)(iii).

[11] For purposes only of waiving the 30-day operative delay of this proposal, the Commission has considered the proposed rule's impact on efficiency, competition and capital formation. 15 U.S.C. 78c(f).

• Send an e-mail to *rule-comments@sec.gov.* Please include File Number SR–NYSEAMEX–2010–11 on the subject line.

*Paper Comments*

• Send paper comments in triplicate to Elizabeth M. Murphy, Secretary, Securities and Exchange Commission, 100 F Street, NE., Washington, DC 20549–1090.

All submissions should refer to File Number SR–NYSEAMEX–2010–11. This file number should be included on the subject line if e-mail is used. To help the Commission process and review your comments more efficiently, please use only one method. The Commission will post all comments on the Commission's Internet Web site (*http://www.sec.gov/rules/sro.shtml*). Copies of the submission,[12] all subsequent amendments, all written statements with respect to the proposed rule change that are filed with the Commission, and all written communications relating to the proposed rule change between the Commission and any person, other than those that may be withheld from the public in accordance with the provisions of 5 U.S.C. 552, will be available for Web site viewing and printing in the Commission's Public Reference Section, 100 F Street, NE., Washington, DC 20549–1090. Copies of the filing will also be available for inspection and copying at the NYSE's principal office and on its Internet Web site at *http://www.nyse.com.* All comments received will be posted without change; the Commission does not edit personal identifying information from submissions. You should submit only information that you wish to make available publicly. All submissions should refer to File Number SR–NYSEAMEX–2010–11 and should be submitted on or before March 30, 2010.

For the Commission, by the Division of Trading and Markets, pursuant to delegated authority.[13]

**Florence E. Harmon,**

*Deputy Secretary.*

[FR Doc. 2010–4911 Filed 3–8–10; 8:45 am]

**BILLING CODE 8011–01–P**

[12] The text of the proposed rule change is available on the Commission's Web site at *http://www.sec.gov/.*

[13] 17 CFR 200.30–3(a)(12).

## DEPARTMENT OF STATE

**[Public Notice 6437]**

### Announcement of a Meeting of the International Telecommunication Advisory Committee

**SUMMARY:** This notice announces a meeting of the International Telecommunication Advisory Committee (ITAC) to prepare for an April 19–30 meeting of International Telecommunication Union (ITU) Telecommunication Standardization Sector (ITU–T) Study Group 13 (Future networks including mobile and Next Generation Networks).

The ITAC will meet by conference call to prepare advice for the U.S. government for the meeting of ITU–T Study Group 13 (Future networks including mobile and Next Generation Networks) on March 26, 10 a.m.—noon Eastern Time. Access to the conference bridge may be obtained on request to the ITAC Secretariat, *minardje@state.gov* or at (202) 647–3234. This meeting is open to the public and the public will have an opportunity to provide comments at this meeting. Any requests for reasonable accommodation should be made at least seven days before the meeting. All such requests will be considered; however, requests made after that date might not be possible to fulfill. Those desiring further information on this meeting may contact the Secretariat at *minardje@state.gov* or at (202) 647–3234.

Dated: March 3, 2010.

**James G. Ennis,**

*International Communications & Information Policy, U.S. Department of State.*

[FR Doc. 2010–4981 Filed 3–8–10; 8:45 am]

**BILLING CODE 4710–07–P**

## DEPARTMENT OF TRANSPORTATION

### Federal Transit Administration

### Preparation of an Alternatives Analysis and Environmental Impact Statement for High Capacity Transit Improvements for the Indianapolis Northeast Corridor in the Indiana Counties of Marion and Hamilton

**AGENCY:** Federal Transit Administration, U.S. Department of Transportation.

**ACTION:** Notice of Intent to prepare an Alternatives Analysis/Environmental Impact Statement.

**SUMMARY:** The Federal Transit Administration (FTA), the Central Indiana Regional Transportation Authority (CIRTA), the Indianapolis Metropolitan Planning Organization (Indianapolis MPO) and Indianapolis Public Transportation Corporation (IndyGo) intend to prepare an Alternatives Analysis/Environmental Impact Statement (AA/EIS) relating to proposed high capacity transit improvements in the Northeast Corridor located in the Indiana counties of Marion and Hamilton. The study area is an approximately 23-mile long travel corridor extending from downtown Indianapolis to the northern parts of Noblesville and includes the communities of Carmel and Fishers. Options to be considered include No-Build, Transportation System Management (TSM), Bus Rapid Transit (BRT), and Commuter Rail. The AA/EIS will be prepared in accordance with the requirements of the National Environmental Policy Act (NEPA) and its implementing regulations. The AA/EIS process provides opportunities for the public to comment on the scope of the EIS, including the project's purpose and need, the alternatives to be considered, and the impacts to be evaluated. The southern terminal of all alternatives will be Union Station or an adjacent transit center in downtown Indianapolis.

The purpose of this notice is to alert interested parties regarding the intent to prepare the AA/EIS, to provide information on the nature of the proposed project and possible alternatives, to invite public participation in the AA/EIS process, including comments on the scope of the EIS as proposed in this notice, to announce that public scoping meetings will be conducted, and to identify participating agency contacts. This input will be used to assist decisionmakers in determining a locally preferred alternative (LPA) and Draft Environmental Impact Statement (DEIS) for the Northeast Corridor. Upon selection of an LPA, the project sponsors will request permission from FTA to enter into preliminary engineering per requirements of New Starts regulations 49 CFR Part 611. The Final Environmental Impact Statement (FEIS) will be issued after FTA approves entrance into preliminary engineering.

*Dates, Times, and Locations:* Comment Due Date: Written comments on the purpose and need for the proposed improvements, and the scope of alternatives and impacts to be considered should be sent to the Indianapolis MPO by April 30, 2010. Public scoping meetings to accept comments on the scope of the study will be held on the following dates:

• Wednesday, March 17 from 7 p.m. until 8:30 p.m. in the Julia Carson Government Center located at 300 E Fall

Creek Parkway N Dr., Indianapolis, Indiana.

• Wednesday, March 24 from 7 p.m. until 8:30 p.m. in the Hamilton County Government Center located at One Hamilton County Square, Noblesville, Indiana.

The public scoping meetings will be informal meetings in an open house format. Interested persons may ask questions about the proposal and the FTA's environmental review process. The project's purpose and need and the initial set of alternatives proposed for study will be presented at these meetings. CIRTA, MPO and IndyGO project team members will be available to answer questions and receive comments. Writing stations will be available to those who wish to submit written comments at the public scoping meetings. Project team members will be available to listen and make notes of residents' comments.

The public scoping meeting locations comply with the Americans with Disabilities Act. Persons needing special accommodations should contact Anna M. Tyskiewicz, Project Manager, at (317) 327–5487 or *atyszkie@indygov.org* at least 48 hours prior to the meeting.

Subsequent to the public scoping meetings, an interagency scoping meeting for Federal, State, regional and local resource and regulatory agencies will be held in April 2010. All appropriate agencies that may have an interest in this project, or have a potential interest in becoming a participating agency, will be notified of the meeting through separate direct correspondence.

*Submitting Comments on the Scope of the Study:* Scoping materials will be available at the meetings and through the project's Web site at *http://www.indyconnect.org.* FTA, CIRTA, the Indianapolis MPO and IndyGo encourage broad participation in the AA/EIS process. All interested agencies, organizations, communities, and members of the public are invited to participate in the scoping process by reviewing and commenting on the scope of the AA/EIS.

**ADDRESSES:** Written comments on the scope of the AA/EIS may be submitted to the attention of Anna M. Tyskiewicz, Project Manager, Indianapolis Metropolitan Planning Organization, City County Building, Suite 1922, 200 E. Washington Street, Indianapolis, Indiana 46204, Phone: (317) 327–5487, Fax (317) 327–5950, E-mail: *atyszkie@indygov.org.*

*Additional Information:* Contact Reginald Arkell, Federal Transit Administration, Region 5, 200 W. Adams Street, Suite 320, Chicago, Illinois 60606, Phone: 312–886–3704, E-mail: reginald.arkell@dot.gov.

**SUPPLEMENTARY INFORMATION:**

## I. Scoping

The FTA, the Indianapolis MPO and CIRTA invite all interested individuals, organizations, businesses, and Federal, State, and local agencies to participate in establishing the purpose and need, project alternatives, and methodologies of the environmental analysis approach for the AA/EIS, as well as participate in an active public involvement program. During the scoping process, the public is invited to comment on (a) the purpose and need; (b) the alternatives to be addressed; (c) the transit technologies to be evaluated; (d) the alignments and station locations to be considered; (e) the environmental, social, and economic impacts to be analyzed; and (f) the evaluation approach to be used to select the LPA.

NEPA "scoping" (40 CFR 1501.7) is intended to identify the significant issues associated with alternatives that will be examined in detail and to limit consideration of issues that are not truly significant. It is in the NEPA scoping process that potentially significant environmental impacts should be identified. Environmental benefits will also be highlighted.

Once the scope of the environmental study is defined, an annotated outline of the draft AA/EIS will be prepared and shared with interested agencies and the public. The outline will serve to: (1) Document the results of the scoping process; (2) contribute to the transparency of the process; and (3) provide a clear roadmap for concise development of the environmental document.

Following the public scoping process, public outreach activities will continue with interested residents, stakeholders and groups throughout the AA/EIS process. The Web site, *http://www.indyconnect.org*, will be updated periodically to reflect the status of the project. Additional opportunities for public participation will be announced through mailings, notices, and press releases.

## II. Description of Study Area and Project Need

The Study Area includes the main travel corridors between downtown Indianapolis and the rapidly growing areas of Hamilton County, Indiana, including the communities of Carmel, Fishers, and Noblesville, as well as the intervening high-density residential and commercial areas of northeastern and central Marion County. This is referred to as the Northeast Corridor. The length of this corridor, from downtown Indianapolis to the northern part of Noblesville, is approximately 23 miles.

This part of Indianapolis contains the region's most severe travel congestion and mobility challenges. Previous studies have shown that the Northeast Corridor, and particularly I–69 north of I–465, continues to face the worst traffic congestion in the region. Given growing mobility challenges, forecasted populations and employment growth coupled by a strong urban center near downtown Indianapolis, a potential promising alternative is investment in transit to supplement and enhance existing Indianapolis bus systems (IndyGo) and to extend services to new markets throughout this regional corridor.

## III. Alternatives

The proposed alternatives to be evaluated in the AA/EIS will include the following:

• No-Build Alternative: The No-Build Alternative is defined as the existing transportation system, plus any committed transportation improvements. Committed transportation improvements include projects that are already in the Indianapolis MPO and Indiana Department of Transportation (INDOT) financially constrained Transportation Improvement Program (TIP), which includes added travel lanes and interchange improvements on I–69 and I–465.

• Transportation System Management (TSM) Alternative: A TSM Alternative, which reflects the best that can be done for mobility without constructing a new transit guideway, is required as part of the New Starts evaluation process. Bus service would operate in mixed traffic along I–69, Binford Boulevard, Fall Creek Parkway, and the Capitol Avenue/Illinois Street one-way pair between Noblesville and South Street in Indianapolis.

• Bus Rapid Transit (BRT) Alternative: A dedicated busway with on-line stations and other related capital improvements would be constructed in the HHPA Railroad right-of-way between Noblesville and approximately 10th Street in Indianapolis, then operations would occur on-street in mixed traffic via the Capitol Avenue/Illinois Street one-way pair to South Street.

• Commuter Rail Transit (CRT) Alternative: In the commuter rail transit alternative, two different train technologies will be considered—FRA compliant vehicles (suitable for mixed traffic with freight trains) and non-FRA

compliant light rail vehicles. FRA compliant vehicles, which would include passenger coaches powered by diesel locomotives or diesel multiple units (DMUs), would operate on improved tracks in the HHPA Railroad right-of-way between Noblesville and approximately 10th Street in Indianapolis, then in the CSX Railroad right-of-way to Union Station. Non-FRA-compliant DMU light rail vehicles would operate on improved tracks in the HHPA Railroad right-of-way between Noblesville and approximately 10th Street in Indianapolis, then in the CSX Railroad right-of-way to Union Station. As an option for reaching a downtown transit center at or adjacent to Union Station, an alignment through the street network of downtown Indianapolis will be analyzed to avoid potential freight conflicts and to allow opportunities for additional stops in the core downtown employment district.

Based on public and agency input received during scoping, variations of the above alternatives will be considered for the Northeast Corridor.

**IV. Potential Impacts for Analysis**

The scoping process will identify which of the following environmental impact areas are most relevant to the project, and merit further exploration in the AA/EIS. The impact areas include: land use, zoning, potential displacements, parkland, economic development, community disruptions, environmental justice, aesthetics, air quality, noise and vibration, wildlife, vegetation, threatened and endangered species, farmland, water quality, wetlands, waterways, floodplains, hazardous materials, and cultural, historic and archaeological resources.

The AA/EIS will take into account both positive and negative impacts, direct and indirect impacts, short-term and long-term impacts and site specific and corridor wide impacts. Evaluation criteria will be consistent with all Federal, State, and local criteria, regulations and policies. The AA/EIS will identify measures to avoid or mitigate significant adverse environmental impacts.

To ensure that all significant issues related to this proposed action are identified and addressed, scoping comments and suggestions are invited from all interested parties.

The Public Involvement Program will include a full range of involvement activities. Activities will include outreach to local and regional officials and community and civic groups; a public scoping process to define the issues of concern among all parties interested in the project; organizing periodic meetings with various local agencies, organizations and committees; a public hearing on release of the DEIS; and development and distribution of project newsletters. There will be additional opportunities to participate in the scoping process in addition to the public meetings announced in this notice. Specific mechanisms for involvement will be detailed in the Public Involvement Program.

**V. Evaluation Criteria**

The Indianapolis MPO may seek New Starts funding for the proposed project under 49 U.S.C. 5309 and will therefore be subject to New Starts regulations (49 CFR Part 611). The New Starts regulations require a planning Alternatives Analysis that leads to the selection of a locally preferred alternative and inclusion of the locally preferred alternative as part of the long-range transportation plan adopted by the Indianapolis MPO. The New Starts regulations also require the submission of certain project-justification information in support of a request to initiate preliminary engineering, which is normally developed in conjunction with the NEPA process. Pertinent New Starts evaluation criteria will be included in an appendix of the FEIS.

**VI. The EIS Process and the Role of Participating Agencies and the Public**

The regulations implementing NEPA, as well as provisions of the Safe, Accountable, Flexible, Efficient Transportation Equity Act: A Legacy for Users (SAFETEA–LU), call for public involvement in the AA/EIS process. Section 6002 of SAFETEA–LU requires the following: (1) Extend an invitation to other Federal and non-Federal agencies and Native American tribes that may have an interest in the proposed project to become "participating agencies;" (2) provide an opportunity for involvement by participating agencies and the public to help define the purpose and need for a proposed project, as well as the range of alternatives for consideration in the AA/EIS; and (3) establish a plan for coordinating public and agency participation in, and comment on, the environmental review process.

The AA/EIS will be prepared in accordance with NEPA and its implementing regulations issued by the Council on Environmental Quality (40 CFR Parts 1500–1508) and with the FTA/Federal Highway Administration regulations "Environmental Impact and Related Procedures" (23 CFR Part 771). In accordance with 23 CFR 771.105(a) and 771.133, FTA will comply with all Federal environmental laws, regulations, and executive orders applicable to the proposed project during the environmental review process to the maximum extent practicable. These requirements include, but are not limited to, the environmental and public hearing provisions of Federal transit laws (49 U.S.C. 5301(e), 5323(b), and 5324), the project-level air quality conformity regulation of the U.S. Environmental Protection Agency (EPA) (40 CFR part 93), the section 404(b)(1) guidelines of EPA (40 CFR part 230), the regulation implementing section 106 of the National Historic Preservation Act (36 CFR part 800), the regulation implementing section 7 of the Endangered Species Act (50 CFR part 402), section 4(f) of the Department of Transportation Act (23 CFR 771.135), and Executive Orders 12898 on environmental justice, 11988 on floodplain management.

Issued on: March 3, 2010.

**Marisol Simón,**

*Regional Administrator.*

[FR Doc. 2010–4973 Filed 3–8–10; 8:45 am]

BILLING CODE P

## DEPARTMENT OF THE TREASURY

### Office of Thrift Supervision

### 34 Disclosures

**AGENCY:** Office of Thrift Supervision (OTS), Treasury.

**ACTION:** Notice and request for comment.

**SUMMARY:** The Department of the Treasury, as part of its continuing effort to reduce paperwork and respondent burden, invites the general public and other Federal agencies to comment on proposed and continuing information collections, as required by the Paperwork Reduction Act of 1995, 44 U.S.C. 3507. The Office of Thrift Supervision within the Department of the Treasury will submit the proposed information collection requirement described below to the Office of Management and Budget (OMB) for review, as required by the Paperwork Reduction Act. Today, OTS is soliciting public comments on its proposal to extend this information collection.

**DATES:** Submit written comments on or before May 10, 2010.

**ADDRESSES:** Send comments, referring to the collection by title of the proposal or by OMB approval number, to Information Collection Comments, Chief Counsel's Office, Office of Thrift Supervision, 1700 G Street, NW., Washington, DC 20552; send a facsimile

transmission to (202) 906–6518; or send an e-mail to *infocollection.comments@ots.treas.gov*. OTS will post comments and the related index on the OTS Internet Site at *http://www.ots.treas.gov*. In addition, interested persons may inspect comments at the Public Reading Room, 1700 G Street, NW., by appointment. To make an appointment, call (202) 906–5922, send an e-mail to *public.info@ots.treas.gov*, or send a facsimile transmission to (202) 906–7755.

**FOR FURTHER INFORMATION CONTACT:** You can request additional information about this proposed information collection from Gary Jeffers (202) 906–6457, Office of Thrift Supervision, 1700 G Street, NW., Washington, DC 20552.

**SUPPLEMENTARY INFORMATION:**

OTS may not conduct or sponsor an information collection, and respondents are not required to respond to an information collection, unless the information collection displays a currently valid OMB control number. As part of the approval process, we invite comments on the following information collection.

Comments should address one or more of the following points:

a. Whether the proposed collection of information is necessary for the proper performance of the functions of OTS;

b. The accuracy of OTS's estimate of the burden of the proposed information collection;

c. Ways to enhance the quality, utility, and clarity of the information to be collected;

d. Ways to minimize the burden of the information collection on respondents, including through the use of information technology.

We will summarize the comments that we receive and include them in the OTS request for OMB approval. All comments will become a matter of public record. In this notice, OTS is soliciting comments concerning the following information collection.

*Title of Proposal:* '34 Disclosures.

*OMB Number:* 1550–0019.

*Form Numbers:* Forms 8A, 8K, 10, 10K, 12b–25, 25, 10–Q, 4, 3, 5, 15, Schedules 14A, 14C, TO, 13D, 13G, 13E–3, G–FIN, G–FINW, G–FIN–4, G–FIN–5, and Annual Report.

*Regulation requirement:* 12 CFR 563d.

*Description:* OTS collects certain periodic information on forms adopted by the U.S. Securities and Exchange Commission (SEC), pursuant to the Securities Exchange Act of 1934 (the Exchange Act). The information is collected annually, quarterly, and at other times as required by certain events. The forms are required to be filed with OTS by certain publicly held savings associations and related persons, pursuant to section 12(i) of the Exchange Act. OTS administers the reporting requirements and forms of the SEC for such persons. This provision applies to approximately 6 Federal stock institutions registered with OTS.

In addition, 12 CFR 552.10 requires that Federal stock associations not wholly owned by a holding company mail, within 90 days after the end of its fiscal year, an Annual Report to each of its stockholders entitled to vote at its annual meeting. The Annual Report shall contain financial statements identical to those required by the Exchange Act and Rule 14a–3 (17 CFR 240.14a–3 thereunder). This provision applies to approximately 26 Federal stock institutions chartered by OTS. Each affected association must send OTS a copy of its Annual Report, properly certified.

*Type of Review:* Extension of a currently approved collection.

*Affected Public:* Businesses or other for-profit; Individuals or households; Not-for-profit institutions; Farms; Federal Government; State, Local or Tribal Government.

*Estimated Number of Respondents:* 95.

*Estimated Burden Hours per Responses:* The response time for forms and schedules could range from 12 minutes to 141 hours and the Annual Report is estimated at 1,576 hours.

*Estimated Frequency of Response:* On occasion; Quarterly; Annual.

*Estimated Total Burden:* 26,183 hours.

Dated: March 3, 2010.

**Ira L. Mills,**

*Paperwork Clearance Officer, Office of Chief Counsel, Office of Thrift Supervision.*

[FR Doc. 2010–4977 Filed 3–8–10; 8:45 am]

BILLING CODE 6720–01–P

---

## DEPARTMENT OF THE TREASURY

### Office of Thrift Supervision

### Savings Association Holding Company Report H–(b)11

**AGENCY:** Office of Thrift Supervision (OTS), Treasury.

**ACTION:** Notice and request for comment.

**SUMMARY:** The Department of the Treasury, as part of its continuing effort to reduce paperwork and respondent burden, invites the general public and other Federal agencies to comment on proposed and continuing information collections, as required by the Paperwork Reduction Act of 1995, 44 U.S.C. 3507. The Office of Thrift Supervision within the Department of the Treasury will submit the proposed information collection requirement described below to the Office of Management and Budget (OMB) for review, as required by the Paperwork Reduction Act. Today, OTS is soliciting public comments on its proposal to extend this information collection.

**DATES:** Submit written comments on or before May 10, 2010.

**ADDRESSES:** Send comments, referring to the collection by title of the proposal or by OMB approval number, to Information Collection Comments, Chief Counsel's Office, Office of Thrift Supervision, 1700 G Street, NW., Washington, DC 20552; send a facsimile transmission to (202) 906–6518; or send an e-mail to *infocollection.comments@ots.treas.gov*. OTS will post comments and the related index on the OTS Internet Site at *http://www.ots.treas.gov*. In addition, interested persons may inspect comments at the Public Reading Room, 1700 G Street, NW., by appointment. To make an appointment, call (202) 906–5922, send an e-mail to *public.info@ots.treas.gov*, or send a facsimile transmission to (202) 906–7755.

**FOR FURTHER INFORMATION CONTACT:** You can request additional information about this proposed information collection from Donna M. Deale (202) 906–7488, Office of Thrift Supervision, 1700 G Street, NW., Washington, DC 20552.

**SUPPLEMENTARY INFORMATION:**

OTS may not conduct or sponsor an information collection, and respondents are not required to respond to an information collection, unless the information collection displays a currently valid OMB control number. As part of the approval process, we invite comments on the following information collection.

Comments should address one or more of the following points:

a. Whether the proposed collection of information is necessary for the proper performance of the functions of OTS;

b. The accuracy of OTS's estimate of the burden of the proposed information collection;

c. Ways to enhance the quality, utility, and clarity of the information to be collected;

d. Ways to minimize the burden of the information collection on respondents, including through the use of information technology.

We will summarize the comments that we receive and include them in the

OTS request for OMB approval. All comments will become a matter of public record. In this notice, OTS is soliciting comments concerning the following information collection.

*Title of Proposal:* Savings Association Holding Company Report H–(b)11.

*OMB Number:* 1550–0060.

*Form Numbers:* OTS Form H–(b)11.

*Regulation requirement:* 12 CFR part 584.1.

*Description:* Section 10(b) of the Home Owners' Loan Act and 12 CFR 584.1(a)(2) provide that each savings and loan holding company is required to file an annual report H–(b)11 within 90 days of the end of its fiscal year. Quarterly filings are also required within 45 days of the end of the first three fiscal quarters, and should describe any material changes from the most recently filed H–(b)11. If material changes have occurred during the fourth quarter, an H–(b)11 filing must be filed within 45 days of the end of the holding company's fiscal fourth quarter as well. The information gathered is essential for OTS to monitor whether savings and loan holding companies are in compliance with applicable statutes, regulations, and conditions of approval to acquire an insured savings association.

*Type of Review:* Revision of a currently approved collection.

*Affected Public:* Businesses or other for-profit.

*Estimated Number of Respondents:* 951.

*Estimated Burden Hours per Responses:* 2 hours.

*Estimated Frequency of Response:* On occasion; Quarterly; Other.

*Estimated Total Burden:* 7,608 hours.

Dated: March 3, 2010.

**Ira L. Mills,**

*Paperwork Clearance Officer, Office of Chief Counsel, Office of Thrift Supervision.*

[FR Doc. 2010–4978 Filed 3–8–10; 8:45 am]

**BILLING CODE 6720–01–P**

## DEPARTMENT OF THE TREASURY

### Internal Revenue Service

### Open Meeting of the Taxpayer Advocacy Panel Volunteer Income Tax Assistance Issue Committee

**AGENCY:** Internal Revenue Service (IRS), Treasury.

**ACTION:** Notice of Meeting.

**SUMMARY:** An open meeting of the Taxpayer Advocacy Panel Volunteer Income Tax Issue Committee will be conducted. The Taxpayer Advocacy Panel is soliciting public comment, ideas, and suggestions on improving customer service at the Internal Revenue Service.

**DATES:** The meeting will be held Tuesday, April 13, 2010.

**FOR FURTHER INFORMATION CONTACT:** Donna Powers at 1–888–912–1227 or 954–423–7977.

**SUPPLEMENTARY INFORMATION:** Notice is hereby given pursuant to Section 10(a)(2) of the Federal Advisory Committee Act, 5 U.S.C. App. (1988) that a meeting of the Taxpayer Advocacy Panel Volunteer Income Tax Issue Committee will be held Tuesday, April 13, 2010, at 2 p.m. Eastern Time via telephone conference. The public is invited to make oral comments or submit written statements for consideration. Due to limited conference lines, notification of intent to participate must be made with Donna Powers. For more information, please contact Ms. Powers at 1–888–912–1227 or 954–423–7977, or write TAP Office, 1000 South Pine Island Road, Suite 340, Plantation, FL 33324, or contact us at the Web site: *http://www.improveirs.org.*

The agenda will include various IRS issues.

Dated: March 3, 2010.

**Shawn F. Collins,**

*Acting Director, Taxpayer Advocacy Panel.*

[FR Doc. 2010–4893 Filed 3–8–10; 8:45 am]

**BILLING CODE 4830–01–P**

## DEPARTMENT OF THE TREASURY

### Internal Revenue Service

### Open Meeting of the Area 5 Taxpayer Advocacy Panel (Including the States of Iowa, Kansas, Minnesota, Missouri, Nebraska, Oklahoma, and Texas)

**AGENCY:** Internal Revenue Service (IRS), Treasury.

**ACTION:** Notice of Meeting.

**SUMMARY:** An open meeting of the Area 5 Taxpayer Advocacy Panel will be conducted. The Taxpayer Advocacy Panel is soliciting public comments, ideas, and suggestions on improving customer service at the Internal Revenue Service.

**DATES:** The meeting will be held Tuesday, April 13, 2010.

**FOR FURTHER INFORMATION CONTACT:** Patricia Robb at 1–888–912–1227 or 414–231–2360.

**SUPPLEMENTARY INFORMATION:** Notice is hereby given pursuant to Section 10(a)(2) of the Federal Advisory Committee Act, 5 U.S.C. App. (1988) that a meeting of the Area 5 Taxpayer Advocacy Panel will be held Tuesday, April 13, 2010, at 11 a.m. Central Time via telephone conference. The public is invited to make oral comments or submit written statements for consideration. Due to limited conference lines, notification of intent to participate must be made with Patricia Robb. For more information please contact Ms. Robb at 1–888–912–1227 or 414–231–2360, or write TAP Office Stop 1006MIL, 211 West Wisconsin Avenue, Milwaukee, WI 53203–2221, or post comments to the Web site: *http://www.improveirs.org.*

The agenda will include various IRS issues.

Dated: March 3, 2010.

**Shawn F. Collins,**

*Acting Director, Taxpayer Advocacy Panel.*

[FR Doc. 2010–4896 Filed 3–8–10; 8:45 am]

**BILLING CODE 4830–01–P**

## DEPARTMENT OF THE TREASURY

### Internal Revenue Service

### Open meeting of Taxpayer Advocacy Panel Notice Improvement Project Committee

**AGENCY:** Internal Revenue Service (IRS), Treasury.

**ACTION:** Notice of meeting.

**SUMMARY:** An open meeting of the Taxpayer Advocacy Panel Notice Improvement Project Committee will be conducted. The Taxpayer Advocacy Panel is soliciting public comments, ideas and suggestions on improving customer service at the Internal Revenue Service.

**DATES:** The meeting will be held Wednesday, April 14, 2010.

**FOR FURTHER INFORMATION CONTACT:** Audrey Y. Jenkins at 1–888–912–1227 or 718–488–2085.

**SUPPLEMENTARY INFORMATION:** Notice is hereby given pursuant to section 10 (a)(2) of the Federal Advisory Committee Act, 5 U.S.C. App. (1988) that an open meeting of the Taxpayer Advocacy Panel Notice Improvement Project Committee will be held Wednesday, April 14, 2010, at 2 p.m. Eastern Time via telephone conference. The public is invited to make oral comments or submit written statements for consideration. Due to limited conference lines, notification of intent to participate must be made with Audrey Y. Jenkins. For more information, please contact Ms. Jenkins at 1–888–912–1227 or 718–488–2085, or write TAP Office, 10 MetroTech Center, 625 Fulton Street, Brooklyn, NY 11201, or post comments to the Web site: *http://www.improveirs.org.*

The agenda will include various IRS issues.

Dated: March 3, 2010.

**Shawn F. Collins,**

*Acting Director, Taxpayer Advocacy Panel.*

[FR Doc. 2010–4892 Filed 3–8–10; 8:45 am]

BILLING CODE 4830–01–P

## DEPARTMENT OF THE TREASURY

### Internal Revenue Service

### Open Meeting of the Area 6 Taxpayer Advocacy Panel (Including the States of Arizona, Colorado, Idaho, Montana, New Mexico, North Dakota, Oregon, South Dakota, Utah, Washington, and Wyoming)

**AGENCY:** Internal Revenue Service (IRS), Treasury.

**ACTION:** Notice of meeting.

**SUMMARY:** An open meeting of the Area 6 Taxpayer Advocacy Panel will be conducted. The Taxpayer Advocacy Panel is soliciting public comment, ideas, and suggestions on improving customer service at the Internal Revenue Service.

**DATES:** The meeting will be held Tuesday, April 6, 2010.

**FOR FURTHER INFORMATION CONTACT:** Janice Spinks at 1–888–912–1227 or 206–220–6098.

**SUPPLEMENTARY INFORMATION:** Notice is hereby given pursuant to Section 10(a)(2) of the Federal Advisory Committee Act, 5 U.S.C. App. (1988) that an open meeting of the Area 6 Taxpayer Advocacy Panel will be held Tuesday, April 6, 2010, at 1 p.m. Pacific Time via telephone conference. The public is invited to make oral comments or submit written statements for consideration. Due to limited conference lines, notification of intent to participate must be made with Janice Spinks. For more information, please contact Ms. Spinks at 1–888–912–1227 or 206–220–6098, or write TAP Office, 915 2nd Avenue, MS W–406, Seattle, WA 98174 or post comments to the Web site: *http://www.improveirs.org.*

The agenda will include various IRS issues.

Dated: March 3, 2010.

**Shawn F. Collins,**

*Acting Director, Taxpayer Advocacy Panel.*

[FR Doc. 2010–4888 Filed 3–8–10; 8:45 am]

BILLING CODE 4830–01–P

## DEPARTMENT OF THE TREASURY

### Internal Revenue Service

### Open Meeting of the Area 3 Taxpayer Advocacy Panel (Including the States of Florida, Georgia, Alabama, Mississippi, Louisiana, Arkansas, and the Territory of Puerto Rico)

**AGENCY:** Internal Revenue Service (IRS), Treasury.

**ACTION:** Notice of Meeting.

**SUMMARY:** An open meeting of the Area 3 Taxpayer Advocacy Panel will be conducted. The Taxpayer Advocacy Panel is soliciting public comments, ideas, and suggestions on improving customer service at the Internal Revenue Service.

**DATES:** The meeting will be held Monday, April 12, 2010.

**FOR FURTHER INFORMATION CONTACT:** Donna Powers at 1–888–912–1227 or 954–423–7977.

**SUPPLEMENTARY INFORMATION:** Notice is hereby given pursuant to Section 10(a)(2) of the Federal Advisory Committee Act, 5 U.S.C. App. (1988) that a meeting of the Area 3 Taxpayer Advocacy Panel will be held Monday, April 12, 2010, at 2:30 p.m. Eastern Time via telephone conference. The public is invited to make oral comments or submit written statements for consideration. Due to limited conference lines, notification of intent to participate must be made with Donna Powers. For more information, please contact Ms. Powers at 1–888–912–1227 or 954–423–7977, or write TAP Office, 1000 South Pine Island Road, Suite 340, Plantation, FL 33324, or post comments to the Web site: *http://www.improveirs.org.*

The agenda will include various IRS issues.

Dated: March 3, 2010.

**Shawn F. Collins,**

*Acting Director, Taxpayer Advocacy Panel.*

[FR Doc. 2010–4889 Filed 3–8–10; 8:45 am]

BILLING CODE 4830–01–P

## DEPARTMENT OF THE TREASURY

### Internal Revenue Service

### Open Meeting of the Taxpayer Advocacy Panel Tax Forms and Publications/MLI Project Committee

**AGENCY:** Internal Revenue Service (IRS), Treasury.

**ACTION:** Notice of Meeting.

**SUMMARY:** An open meeting of the Taxpayer Advocacy Panel Tax Forms and Publications/MLI Project Committee will be conducted. The Taxpayer Advocacy Panel is soliciting public comments, ideas and suggestions on improving customer service at the Internal Revenue Service.

**DATES:** The meeting will be held Thursday, April 8, 2010.

**FOR FURTHER INFORMATION CONTACT:** Marisa Knispel at 1–888–912–1227 or 718–488–3557.

**SUPPLEMENTARY INFORMATION:** Notice is hereby given pursuant to section 10(a)(2) of the Federal Advisory Committee Act, 5 U.S.C. App. (1988) that an open meeting of the Taxpayer Advocacy Panel Tax Forms and Publications/MLI Project Committee will be held Thursday, April 8, 2010, at 1 p.m., Eastern Time via telephone conference. The public is invited to make oral comments or submit written statements for consideration. Due to limited conference lines, notification of intent to participate must be made with Marisa Knispel. For more information, please contact Ms. Knispel at 1–888–912–1227 or 718–488–3557, or write TAP Office, 10 MetroTech Center, 625 Fulton Street, Brooklyn, NY 11201, or post comments to the Web site: *http://www.improveirs.org.*

The agenda will include various IRS issues.

Dated: March 3, 2010.

**Shawn F. Collins,**

*Acting Director, Taxpayer Advocacy Panel.*

[FR Doc. 2010–4891 Filed 3–8–10; 8:45 am]

BILLING CODE 4830–01–P

## TENNESSEE VALLEY AUTHORITY

### Shoreline Management Initiative, Reservoirs in Alabama, Georgia, Kentucky, Mississippi, North Carolina, Tennessee, and Virginia; Amendment to Record of Decision (ROD)

**AGENCY:** Tennessee Valley Authority (TVA).

**ACTION:** Issuance of Amendment to ROD.

**SUMMARY:** This notice is provided in accordance with the Council on Environmental Quality's regulations (40 CFR parts 1500 to 1508) and TVA's procedures implementing the National Environmental Policy Act. In 1999, TVA adopted its current Shoreline Management Policy (SMP) to implement the preferred alternative in the November 1998 environmental impact statement (EIS) for the Shoreline Management Initiative (SMI). On August 20, 2009, the TVA Board of Directors decided to amend SMP to terminate the "Maintain and Gain" program, which

allowed for the exchange of shoreline access rights of equal or greater value. TVA determined that the environmental impacts of the modification of SMP would not materially differ from the impacts quantified in the original EIS and that the effect of removing the Maintain and Gain provision is adequately addressed in the EIS. The environmental and project goals of the SMI and SMP would still be met without the Maintain and Gain program.

**FOR FURTHER INFORMATION CONTACT:** Charles P. Nicholson, Program Manager, NEPA Compliance, Environment and Technology, Tennessee Valley Authority, 400 West Summit Hill Drive, WT 11D, Knoxville, Tennessee 37902–1499; telephone (865) 632–3582 or e-mail *cpnicholson@tva.gov.*

**SUPPLEMENTARY INFORMATION:** In 1999, TVA adopted SMP to implement the April 1999 TVA Board decision to adopt the preferred alternative (Blended Alternative) of the November 1998 EIS entitled "Shoreline Management Initiative: An Assessment of Residential Shoreline Development Impacts in the Tennessee Valley." In June 1999, TVA published a ROD in the **Federal Register** (64 FR 300092, June 4, 1999) reflecting this decision. The Blended Alternative emphasized conservation of shoreline resources and no net loss of public lands while providing for reasonable access and compatible use of the shoreline by adjacent residents. It also included the Maintain and Gain program that allowed TVA to consider requests from property owners without shoreline access rights to obtain those rights in exchange for eliminating shoreline access rights of equal or preferably greater length and value; such exchanges would result in no net loss, or preferably a net gain, of public shoreline.

TVA recently reviewed the Maintain and Gain program. Since its inception in 1999, TVA has approved nine Maintain and Gain requests for the exchange of water access rights on TVA reservoirs, which have resulted in only a small increase in the amount of shoreline protected. The closing of 7,113 linear feet of shoreline for private water use access rights and opening 6,036 linear feet of shoreline access rights to private landowners has yielded a net gain of 1,077 linear feet of shoreline closed to residential water use access. Overall, this is less than one-tenth of 1 percent of the 4,100 miles of shoreline available for private water use throughout the Tennessee Valley.

The Maintain and Gain program was used infrequently, and the decisions required to be made thereunder were vulnerable to some inconsistency. TVA has determined that the elimination of the Maintain and Gain program would have minor and insignificant environmental impacts and that such impacts would not significantly differ from the impacts quantified in the original EIS. The environmental and project goals of the SMI and SMP would still be met. Consequently, the TVA Board of Directors terminated the Maintain and Gain program on August 20, 2009. The termination of the Maintain and Gain program does not affect the other key components of SMP, such as the use of vegetation management plans, limits to the size of residential water use facilities, use of shoreline management zones, management of access/view corridor size, use of best management practices for construction, management of vegetation, stabilization of shoreline erosion, and education activities.

Dated: February 25, 2010.

**Anda Ray,**

*Senior Vice President of Environment and Technology and Environmental Executive.*

[FR Doc. 2010–4663 Filed 3–8–10; 8:45 am]

**BILLING CODE 8120–08–P**

## UTAH RECLAMATION MITIGATION AND CONSERVATION COMMISSION

### Notice of a Project Waiver of Section 1605 (Buy American Requirement) of the American Recovery and Reinvestment Act of 2009 to the Utah Division of Wildlife Resources (Division)

**AGENCY:** Utah Reclamation Mitigation and Conservation Commission.

**ACTION:** Buy American Exception under the American Recovery and Reinvestment Act of 2009.

**SUMMARY:** The Utah Reclamation Mitigation and Conservation Commission (Commission) hereby provides notice that on February 17, 2010, the Commission's Executive Director granted a limited waiver of Section 1605 of the American Recovery and Reinvestment Act of 2009 (Recovery Act), Public Law 111–5, 123 Stat. 115, 303 (2009) with respect to certain water quality treatment and monitoring equipment that will be used in a project funded under the Recovery Act (Pub. L. 111–5) and implemented through the Central Utah Project Completion Act Program (CUPCA).

**DATES:** The Recovery Act Buy American waiver was signed February 17, 2010.

**ADDRESSES:** Utah Reclamation Mitigation and Conservation Commission, 230 South 500 East, Suite 230, Salt Lake City, Utah 84102–2045. Internet address: *http://www.mitigationcommission.gov.*

**FOR FURTHER INFORMATION CONTACT:** Maureen Wilson, Project Coordinator, Utah Reclamation Mitigation and Conservation Commission, 801–524–3166.

**SUPPLEMENTARY INFORMATION:** In accordance with section 1605(c) of the Recovery Act and with section 176.80 of Title 2 of the Code of Federal Regulations, the Commission hereby provides notice that on February 17, 2010, the Executive Director granted a limited waiver of section 1605 of the Recovery Act (Buy American provision) with respect to certain water quality treatment and monitoring equipment components that will be used in a project funded under the Recovery Act. The basis for this waiver is a non-availability determination pursuant to section 1605(b)(2) of the Recovery Act.

### I. Background

Agreement No. 09FCUT–RA04 June Sucker Facility Improvements—Fisheries Experiment Station between the Commission and the State of Utah, Division of Wildlife Resources (Division) was entered into pursuant to the Recovery Act, for the purpose of funding hatchery improvements for culture of June sucker, an endangered species. The hatchery improvements include expansion of a recirculation system that allows optimal water temperatures for culture of June sucker. The recirculation system requires water treatment and water quality monitoring.

In Section 1605(a) of the Recovery Act, the Buy American provision states that none of the funds appropriated by the Act, "may be used for a project for the construction, alteration, maintenance or repair of a public building or public work unless all of the iron, steel, and manufactured goods used in the project are produced in the United States."

Subsections 1605(b) and (c) of the Recovery Act authorize the head of a Federal department or agency to waive the Buy American provision by finding that: (1) Applying the provision would be inconsistent with the public interest; (2) the relevant goods are not produced in the United States in sufficient and reasonably available quantities and of a satisfactory quality; or, (3) the inclusion of the goods produced in the United States will increase the cost of the project by more than 25 percent. If the head of a Federal department or agency waives the Buy American provision, then the head is required to publish a

detailed justification in the Federal Register. Finally, section 1605(d) of the Recovery Act states that the Buy American provision must be applied in a manner consistent with the United States' obligations under international agreements.

**II. Nonavailability Finding**

The Commission's Executive Director determined—as applied to certain water quality treatment and monitoring equipment components to be used in a hatchery rearing June sucker, an endangered species—application of the Buy American provision is not possible because the components, specifically rotating drum filter upgrades and a water quality monitoring system expansion, are not available from American manufacturers in sufficient and reasonably available commercial quantities of a satisfactory quality.

Expansion of the recirculation system requires adding a second drum filter for aquaculture water treatment. The existing system uses a drum filter manufactured by PRAqua Supplies Ltd.—Nanaimo, British Columbia, Canada. The Division owns an RFM 4872 drum filter also manufactured by PRAqua Supplies Ltd that will be used for the system expansion. This drum filter requires modification with new drum filter seals, screen panels and a new control panel to be suitable for use in the aquaculture system. This will allow the expanded system to match the existing equipment and drum filter.

The existing recirculation facility is equipped with a variety of automated sensors that allow system operators to monitor water quality, flow and temperature in the fish hatchery. The existing equipment was provided and installed by Point Four Systems Inc. of Coquitlam, BC, Canada.

Recirculation system expansion will also require new components to expand aquaculture water quality monitoring. New components will include additional oxygen sensors, flow meters and related control panel wiring to connect to the existing system. Use of components sharing the same manufacturer will allow efficient operation of equipment that is in place. New monitoring system components that will function with existing components are not available from American manufacturers in sufficient and reasonably available commercial quantities of a satisfactory quality.

**III. Waiver**

On February 17, 2010 based on the non-availability finding discussed above and pursuant to ARRA section 1605(c), the Commission's Executive Director granted a limited waiver of the Recovery Act's Buy American requirements with respect to Agreement No. 09FCUT–RA04 between the Commission and Division for the aforementioned components of a hatchery recirculation system.

Dated: February 25, 2010.

**Michael C. Weland,**

*Executive Director.*

[FR Doc. 2010–4775 Filed 3–8–10; 8:45 am]

**BILLING CODE 4310–05–P**

---

## DEPARTMENT OF VETERANS AFFAIRS

### Determinations Concerning Illnesses Discussed in the Institute of Medicine Report on *Gulf War and Health: Updated Literature Review of Depleted Uranium*

**AGENCY:** Department of Veterans Affairs.

**ACTION:** Notice.

**SUMMARY:** As required by law, the Department of Veterans Affairs (VA) hereby gives notice that the Secretary of Veterans Affairs, under the authority granted by the Persian Gulf War Veterans Act of 1998, Public Law 105–277, title XVI, 112 Stat. 2681–742 through 2681–749 (codified at 38 U.S.C. 1118), has determined not to establish a presumption of service connection at this time, based on exposure to depleted uranium in the Persian Gulf during the Persian Gulf War, for any of the diseases, illnesses, or health effects discussed in the July 30, 2008, report of the Institute of Medicine (IOM) of the National Academy of Sciences (NAS), titled *Gulf War and Health: Updated Literature Review of Depleted Uranium.* This determination does not in any way preclude VA from granting service connection for any disease, including those specifically discussed in this notice, nor does it change any existing rights or procedures.

**FOR FURTHER INFORMATION CONTACT:** Nancy Copeland, Regulations Staff (211D), Compensation and Pension Service, Veterans Benefits Administration, Department of Veterans Affairs, 810 Vermont Avenue, NW., Washington, DC 20420, telephone (202) 461–9685. (This is not a toll-free number.)

**SUPPLEMENTARY INFORMATION:**

**I. Statutory Requirements**

The Persian Gulf War Veterans Act of 1998, Public Law 105–277, title XVI, 112 Stat. 2681–742 through 2681–749 (codified at 38 U.S.C. 1118), and the Veterans Programs Enhancement Act of 1998, Public Law 105–368, 112 Stat. 3315, previously directed the Secretary to seek to enter into an agreement with the NAS IOM to review and evaluate the scientific literature regarding associations between illness and exposure to specific toxic agents, environmental or wartime hazards, or preventive medicines or vaccines to which service members may have been exposed during service in the Southwest Asia theater of operations during the Persian Gulf War.

In 1998, IOM began a program to examine the scientific and medical literature on the potential health effect of specific agents and hazards to which Gulf War Veterans might have been exposed during their deployment. Five reports have examined health outcomes related to (1) depleted uranium (DU), pyridostigmine bromide, sarin, and vaccines (Volume 1); (2) insecticides and solvents; (3) fuels, combustion products, and propellants; (4) health effects of serving in the Gulf War irrespective of exposure information; and (5) infectious diseases. A sixth IOM report, *Gulf War and Health, Volume 6: Deployment Related Stress,* examined the physiologic, psychologic, and psychosocial effects of deployment-related stress.

The present report updates the review of DU presented in Volume 1. When Volume 1 was published, few studies of health outcomes of exposure to DU had been conducted. Therefore, the IOM studied the health outcomes of exposure to natural and processed uranium in workers at plants that processed uranium ore for use in weapons. After evaluating the literature, the IOM concluded that there was inadequate or insufficient evidence to determine whether an association exists between uranium exposure and 14 health outcomes: lymphatic cancer; bone cancer; nervous system disease; reproductive or developmental dysfunction; non-malignant respiratory disease; gastrointestinal disease; immune-mediated disease; effects on hematologic measures; genotoxic effects; cardiovascular effects; hepatic disease; dermal effects; ocular effects; and musculoskeletal effects. The IOM also concluded that there was limited or suggestive evidence of no association between uranium and clinically significant renal dysfunction and between uranium and lung cancer at specified cumulative internal doses.

Although previously used, the Gulf War marked the first time that DU munitions and armor were used extensively by the military. DU was used by the U.S. military for both offensive and defensive purposes in the

Gulf War. Heavy-armor tanks have a layer of DU armor to increase protection. Offensively, DU is used in kinetic-energy cartridges and ammunition rounds. The U.S. Army used an estimated 9,500 DU tank rounds during the Gulf War. Ammunition containing DU was used in Bosnia-Herzegovina in 1994–1995 and in Kosovo in 1999; about 10,800 DU rounds were fired in Bosnia-Herzegovina, and about 30,000 in Kosovo. Weapons containing DU were also used in Operation Iraqi Freedom (OIF), which began in 2003.

Military personnel have been exposed to DU as a result of friendly-fire incidents, cleanup and salvage operations, and proximity to burning DU containing tanks and ammunition. During the Gulf War, an estimated 134–164 people experienced "level I" exposure (the highest of three exposure categories as classified by the U.S. Department of Defense) through wounds caused by DU fragments, inhalation of airborne DU particles, ingestion of DU residues, or wound contamination by DU residues. Hundreds or thousands more may have been exposed to lower exposure through inhalation of dust containing DU particles and residue or ingestion from hand-to-mouth contact or contamination of clothing. Ten U.S. military personnel who served in OIF had confirmed DU detected in their urine; all 10 had DU embedded fragments or fragment injuries. When Volume 1 was published in 2000, few studies of health outcomes of exposure to natural uranium and DU had been conducted. Because DU continues to be used by the military, VA asked IOM to update its 2000 report and take into consideration information published since Volume 1.

## II. Authority

Section 1602 of Public Law 105–277 provides that whenever the Secretary receives a report under section 1603 of Public Law 105–277, the Secretary must determine whether a presumption of service connection is warranted for any illness covered by that report. The statute provides that a presumption will be warranted when the Secretary determines that there is a positive association (*i.e.,* the credible evidence for an association is equal to or outweighs the credible evidence against an association) between exposure of humans or animals to a biological, chemical, or other toxic agent, environmental or wartime hazard, or preventive medicine or vaccine known or presumed to be associated with service in the Southwest Asia theater of operations during the Persian Gulf War and the occurrence of a diagnosed or undiagnosed illness in humans or animals. When a positive association exists, the Secretary will publish regulations establishing presumptive service connection for that illness. If the Secretary determines that a presumption of service connection is not warranted, he is to publish a notice of that determination, including an explanation of the scientific basis for that determination. The Secretary's determination must be based on consideration of the NAS reports and all other sound medical and scientific information and analysis available to the Secretary.

Although Section 1118 does not define "credible evidence," it does instruct the Secretary to take into consideration whether the results (of any report, information, or analysis) are statistically significant, are capable of replication, and withstand peer review. *See* 38 U.S.C. 1118(b)(2)(B). Simply comparing the number of studies that report a significantly increased relative risk to the number of studies that report a relative risk that is not significantly increased is not a valid method for determining whether the weight of evidence overall supports a finding that there is or is not a positive association between exposure to an agent, hazard, or medicine or vaccine and the subsequent development of the particular illness. Because of differences in statistical significance, confidence levels, control for confounding factors, and other pertinent characteristics, some studies are clearly more credible than others; and the Secretary has given the more credible studies more weight in evaluating the overall weight of the evidence concerning specific illnesses.

## III. Prior NAS Report

NAS issued its initial report, *Gulf War and Health, Volume 1: Depleted Uranium, Pyridostigmine Bromide, Sarin, Vaccines,* on January 1, 2000. In that report, NAS limited its analysis to the health effects of DU, the chemical warfare agent sarin, vaccinations against botulism toxin and anthrax, and pyridostigmine bromide, which was used in the Gulf War as a pretreatment for possible exposure to nerve agents. On July 6, 2001, VA published a notice in the **Federal Register** announcing the Secretary's determination that the available evidence did not warrant a presumption of service connection for any disease discussed in that report. *See* 66 FR 35702 (2001).

## IV. Gulf War and Health: Updated Literature Review of DU

On July 30, 2008, the IOM issued an updated report, *Gulf War and Health: Updated Literature Review of Depleted Uranium.* The report updated the review of DU that appeared in Volume 1. IOM conducted an extensive search of the scientific literature from among 3,500 titles and abstracts from which approximately 1,000 relevant articles were selected. These articles included epidemiologic, toxicologic, and exposure-assessment studies with additional information obtained from invited experts and the public.

## V. Categories of Strength of Association

The IOM used the evidence in the scientific literature to draw conclusions about associations between exposure to DU and specific adverse health outcomes. Those conclusions are presented as categories of strength of association. The categories have been used in many previous IOM studies, and they have gained wide acceptance by Congress, government agencies, researchers, and Veteran groups. In its report, IOM classified the evidence of an association between exposure to a specific agent and a specific health outcome in the categories summarized as follows:

- *Sufficient Evidence of a Causal Relationship:* This category means that the evidence is sufficient to conclude that a causal relationship exists between the exposure to uranium and a specific health outcome in humans. The evidence fulfills the criteria for sufficient evidence of an association and satisfies several of the criteria used to assess causality: strength of association, dose-response relationship, consistency of association, temporal relationship, specificity of association, and biological plausibility.

IOM did not find any health outcomes that met the criteria for this category.

- *Sufficient Evidence of an Association:* This category means that the evidence is sufficient to conclude that there is an association. That is, a consistent association unlikely to be due to sampling variability has been observed between exposure to uranium and a specific health outcome in human studies that were free of severe bias and that controlled for confounding.

IOM did not find any health outcomes that met the criteria for this category.

- *Limited/Suggestive Evidence of an Association:* This category means that the evidence is suggestive of an association between exposure to uranium and a specific health outcome, but the body of evidence is limited by

insufficient avoidance of bias, insufficient control for confounding, or large sampling variability.

IOM did not find any health outcomes that met the criteria for this category.

• *Limited/Suggestive Evidence of No Association:* This category means that the evidence is consistent in not showing an association between exposure to uranium of any magnitude and a specific health outcome. A conclusion of no association is inevitably limited to the conditions, magnitudes of exposure, and length of observation in the available studies.

IOM did not find any health outcomes that met the criteria for this category.

• *Inadequate/Insufficient Evidence to Determine Whether an Association Exists:* This category means that the evidence is of insufficient quantity, quality, or consistency to permit a conclusion regarding the existence of an association between exposure to uranium and a specific health outcome in humans.

IOM concluded that there is inadequate/insufficient evidence to determine whether an association exists between exposure to uranium and each health outcome described in the report because well-conducted studies showed equivocal results, the magnitude or frequency of the health outcome may be so low that it cannot be reliably detected given the sizes of the study populations, and the available studies had limitations that prevented the IOM from reaching clear conclusions about health outcomes. The health outcomes are discussed below.

## VI. Uranium and DU

Uranium is a dense, radioactive element that occurs naturally in soil, rocks, surface and underground water, air, plants, and animals. It also occurs in trace amounts in many foods and drinking water as a result of its presence in the environment. Uranium is the heaviest naturally occurring element. Its density is 19 times that of water and 1.65 times that of lead. The primary civilian use of uranium is as fuel for nuclear power plants.

DU is a byproduct of the uranium enrichment process used to generate fuel for nuclear power plants. As a byproduct of uranium enrichment, DU is abundant and inexpensive. The U.S. Army began researching the use of DU for military applications in the early 1970s, and DU is now used both offensively and defensively. In the Gulf War, heavy-armor tanks had a layer of DU armor to increase protection, and DU was used in kinetic-energy cartridges and ammunition rounds by the U.S. Army, Air Force, Marine Corps, and Navy.

After reviewing approximately 1,000 articles, the IOM focused on a number of relevant health outcomes on which to draw conclusions. The selected health outcomes were ten types of cancer and several non-malignant diseases or conditions. The types of cancer were lung cancer, leukemia, lymphoma, bone cancer, renal cancer, bladder cancer, brain and other central nervous system cancers, stomach cancer, prostatic cancer and testicular cancer. The non-malignant diseases or conditions included renal disease, respiratory disease, neurologic disease, and reproductive and developmental effects. With the exception of prostatic and testicular cancers, the health outcomes were selected by the IOM because there are plausible mechanisms of action (for example, lung cancer and respiratory disease were selected because inhaled insoluble uranium oxides lodge in the lung). Prostatic cancer is the most frequently diagnosed cancer in all men in the U.S., and any slight increase in risk could result in large numbers of cases and deaths. Testicular cancer, the most common cancer in young men, is of special interest to Gulf War Veterans, and some recent studies of Veterans suggested a higher but non-significant risk in Gulf War Veterans than in their nondeployed counterparts.

## VII. Conclusions

### *A. Lung Cancer*

Lung cancer is the leading cause of cancer deaths in the U.S. and the second-most common cancer in both American men and women. Tobacco-smoking is the predominant risk factor, and it is thought to account for about 87 percent of lung-cancer deaths.

Twenty-three studies of uranium-processing workers examined the association between exposure to uranium and lung cancer, as did three studies of military populations and three studies of residents. In the studies reviewed, the IOM found no consistent evidence of an effect of exposure to natural uranium or DU on lung-cancer incidence. Even considering the evidence from the studies with the strongest designs, the pattern among the studies varied: some studies show increases in risk of lung cancer, and other show decreases. A major shortcoming of the studies is the lack of individual data on smoking, a primary risk factor for lung cancer.

IOM found inadequate/insufficient evidence to determine whether an association between exposure to uranium and lung cancer exists.

### *B. Leukemia*

Leukemia originates in the bone marrow and is a malignant blood disease. Leukemia is a relatively uncommon malignancy, so large study populations are generally needed to demonstrate any significant moderate effects. The studies reviewed by the IOM generally did not have adequate sample size. The results of only 1 of 23 studies reviewed by the IOM achieved statistical significance, indicating a reduction in mortality from leukemia. However, that study was limited by a lack of exposure data and information on other risk factors. The remaining 22 studies showed both increases and decreases in risk associated with exposure to uranium, all of which were non-significant. There was no consistent evidence of effect, and the pattern among studies was highly varied. The same pattern was observed after restriction of consideration to larger studies. On the basis of the evidence to date, the IOM would assign a low priority to additional study of an association between exposure to DU and leukemia.

IOM found inadequate/insufficient evidence to determine whether an association between exposure to uranium and leukemia exists.

### *C. Lymphomas*

#### 1. Hodgkin Lymphoma

Hodgkin Lymphoma (also known as Hodgkin's disease) is a very rare cancer that originates in lymphatic tissue. The studies considered by the IOM split virtually evenly between showing an increase in risk of Hodgkin Lymphoma associated with exposure to natural uranium or DU and showing no change or a decrease in the risk of Hodgkin Lymphoma associated with uranium exposure. Only one study achieved a statistically significant finding, showing a significant increase in the risk of Hodgkin Lymphoma. Most of the smaller studies show a non-significant decrease in risk of incidence or death. The IOM noted that the pattern among the studies was highly varied, as would be expected if there truly were no effect in the population.

#### 2. Non-Hodgkin Lymphoma and Other Lymphatic Cancers

Non-Hodgkin Lymphoma (NHL) encompasses the types of cancers of the lymphatic tissues that remain after exclusion of Hodgkin lymphoma. IOM evaluated 24 published studies of a possible relationship between exposure to natural uranium or DU and NHL. Most of the studies showed that the exposed subjects experienced a risk of

NHL equal to or lower than that in unexposed subjects.

On the basis of the available evidence, the IOM concludes that there is a lack of strong and consistent evidence of an association between uranium exposure and lymphatic cancers. Although the available evidence does not justify further consideration of a possible association between DU and lymphatic cancers, IOM concludes that further study of this type of cancer may be warranted on biologic grounds, given that uranium is known to accumulate in the lymph nodes.

IOM found inadequate/insufficient evidence to determine whether an association between exposure to uranium and lymphomas exists. This conclusion applies to both Hodgkin Lymphoma and NHL.

*D. Bone Cancer*

Twelve studies of uranium-processing workers, one study of a deployed population, and two residential studies assessed bone-cancer outcomes. In most of the studies, the risk of bone cancer was the same or decreased after exposure to natural uranium or DU. Only one study had a significant finding: a statistically significant increase in bone-cancer incidence—four cases—in a Danish military population deployed to the Balkans. However, because three of the four cases occurred within the first year after deployment, it is unlikely that deployment-related exposure was a factor, given the latency of cancer. The studies generally did not have adequate sample size to detect any significant moderate effects. Overall, the available studies did not provide clear and consistent evidence of an association between natural uranium or DU, and bone cancer.

IOM found inadequate/insufficient evidence to determine whether an association between exposure to uranium and bone cancer exists.

*E. Renal Cancer*

The IOM considered 20 studies of an association between natural uranium or DU and renal cancer. None of the published results demonstrated a significant increase in risk after uranium exposure. One study indicated a statistically significant decrease in renal-cancer mortality associated with uranium exposure. That study did not include exposure assessment or information on other risk factors. On the basis of the available evidence, the IOM would assign a low priority to further study of an association between exposure to DU and renal cancer.

IOM found inadequate/insufficient evidence to determine whether an association between exposure to uranium and renal cancer exists.

*F. Bladder Cancer*

The IOM evaluated 20 published studies of a potential association between exposure to natural uranium or DU and bladder cancer: 14 uranium-processing studies, two studies of military populations, and four residential studies. Most of the studies reported the same or reduced bladder-cancer mortality or incidence in exposed subjects. Only one finding achieved statistical significance, a reduction in bladder-cancer incidence. That study is limited by a lack of data on internal radiation exposure and other risk factors. Overall, the IOM finds little evidence that exposure to natural uranium or DU increases the risk of bladder cancer. The IOM would assign a low priority to further study of an association between exposure to DU and bladder cancer.

IOM found inadequate/insufficient evidence to determine whether an association between exposure to uranium and bladder cancer exists.

*G. Brain and Other Central Nervous System Cancers*

Of the 20 published studies of an association between uranium exposure and brain and other central nervous system cancers reviewed by the IOM, almost all failed to demonstrate statistically significant associations. The studies are roughly evenly split between those showing increases in and those showing the same or decreases in mortality or incidence. The two studies that had statistically significant results showed decreases in risk after uranium exposure.

The published studies show inconsistent results that do not lead to a conclusion of an association between natural uranium or DU and cancers of the central nervous system. Studies of some other cancers (for example, bladder cancer) showed an equal or reduced risk after exposure, but the distribution of studies of brain and other central nervous system cancers is more balanced. Because of that pattern, the IOM believes that further study of an association between DU and central nervous system cancers may be warranted but should not be assigned a high priority.

IOM found inadequate/insufficient evidence to determine whether an association between exposure to uranium and cancers of the central nervous system, including brain cancer, exists.

*H. Stomach Cancer*

The IOM considered 21 published studies of a possible association between natural uranium or DU, and stomach cancer, including 16 processing studies, one study of military populations, and four residential studies. All but three had statistically non-significant results, and most demonstrated the same or decreased mortality or incidence. The three studies that had statistically significant results all showed a decrease in mortality or incidence. Overall, the IOM finds little evidence to suggest that exposure to natural uranium or DU increases the risk of stomach cancer.

IOM found inadequate/insufficient evidence to determine whether an association between exposure to uranium and stomach cancer exists.

*I. Male Genital Cancers*

1. Prostatic Cancer

The IOM evaluated 19 published studies of a potential association between exposure to natural or depleted uranium and prostatic cancer, including 14 processing studies, two studies of deployed populations, and three residential studies. Only one reported a statistically significant finding: a significant reduction in prostatic-cancer incidence, but not mortality. This study is limited by a lack of data on internal radiation exposure. Three other studies of processing workers reported increased prostatic-cancer mortality, but none of the standard mortality rates were statistically different from the null value, indicating no effect (Ritz, 1999; Beral *et al.,* 1988; Loomis and Wolf, 1996).

Of the 19 studies considered, none demonstrated a significant increase in the risk of prostatic cancer after exposure to uranium, and one showed a significant decrease in cancer incidence but not mortality. On the basis of the available evidence, IOM would assign a low priority to further study of an association between exposure to DU and prostatic cancer.

IOM found inadequate/insufficient evidence to determine whether an association between exposure to uranium and prostatic cancer exists.

2. Testicular Cancer

IOM considered 15 published studies for a possible relationship between exposure to natural uranium or DU and testicular cancer, including 11 studies of uranium-processing workers, three studies of military populations, and one study of residents living near a nuclear facility in Pennsylvania. None of the results achieved statistical significance,

although all occupational cohorts had lower mortality. IOM finds no consistent evidence that uranium exposure increases the risk of testicular cancer. Testicular cancer, although very rare in the general population, is common in young adult males and therefore prevalent in deployed Veterans. Despite the inconsistent evidence, testicular cancer is of special interest to Gulf War Veterans. The IOM believes that further study of an association between DU and testicular cancer may be warranted, but should not be assigned a high priority.

IOM found inadequate/insufficient evidence to determine whether an association between exposure to uranium and testicular cancer exists.

## VIII. Non-Cancer Outcomes

### *A. Non-malignant Renal Disease*

1. Mortality

Fourteen studies assessed the association between occupational exposure and renal-disease mortality. In many of the 14 studies, the computed death rates included all genitourinary conditions instead of focusing on renal diseases. In several of the plants, uranium exposure coexisted with other relevant heavy-metal or chemical exposure. Generally, most researchers were unable to isolate the effects of uranium exposure alone. Four studies found an excess mortality that was not statistically significant. One study reported a statistically significant decrease in mortality. Other studies also reported a decrease or no difference in mortality after uranium exposure.

2. Morbidity

IOM concludes that there is inadequate/insufficient evidence to determine whether an association between exposure to uranium and non-malignant renal disease exists.

### *B. Non-maligant Respiratory Disease*

IOM evaluated 16 studies of exposure to uranium and non-malignant respiratory disease. The results of several of the studies support an effect of employment in uranium-processing facilities on nonmalignant respiratory disease, but their applicability to military DU exposure is limited by the extent of concomitant coexposure of such workers to other respiratory toxicants. Several other studies found decreases in lung-disease mortality in exposed populations. On the basis of the evidence, IOM would assign a high priority to further study of an association between exposure to DU and nonmalignant respiratory disease.

IOM found inadequate/insufficient evidence to determine whether an association between exposure to uranium and nonmalignant respiratory disease exists.

### *C. Neurologic Effects*

Overall, the published studies of neurologic outcomes are either negative studies that do not find any evidence of health effects of exposure to DU or relatively small studies that find inconstant associations. On the basis of the available evidence, IOM would assign a high priority to further study of an association between exposure to DU and neurologic effects.

IOM found inadequate/insufficient evidence to determine whether an association between exposure to uranium and nonmalignant respiratory disease exists.

### *D. Reproductive and Developmental Effects*

A few studies examined the effects of natural uranium or DU on human reproduction and development. Relatively large populations are generally necessary to demonstrate significant but subtle reproductive or developmental effects. The studies reviewed generally had too few subjects or relied on insufficiently precise exposure assessment to support definitive conclusions. On the basis of the available evidence, IOM would assign a high priority to further study of an association between exposure to DU and reproductive and developmental effects.

IOM found inadequate/insufficient evidence to determine whether an association between exposure to uranium and reproductive and developmental effects exist.

## IX. Other Health Outcomes

For other health outcomes, IOM found that the effects of exposure to natural uranium or DU have not been studied in detail in humans, and that the evidence from which to draw conclusions is sparse. Consequently, IOM found inadequate/insufficient evidence to determine whether an association exists between exposure to uranium and cardiovascular effects, genotoxic effects, hematologic effects, immunologic effects and skeletal effects.

## Summary

The likelihood of detecting an association between exposure and a health outcome depends on several factors. For the health outcomes discussed, IOM concluded that exposure to uranium is not associated with a large or frequent effect. Nevertheless, it is possible that DU-exposed Veterans will have a small increase in the likelihood of developing the disease. Typically, extremely large study populations are necessary to demonstrate that a specific exposure is not associated with a health outcome. IOM's evaluation of the literature supports the conclusion that a large or frequent effect is unlikely, but it is not possible to state conclusively that a particular health outcome cannot occur.

IOM concluded that there is inadequate/insufficient evidence to determine whether an association exists between exposure to uranium and the following health outcomes: lung cancer; leukemias; lymphomas; bone cancer; renal cancer; bladder cancer; brain and other central nervous system cancers; stomach cancer; male genital cancers (prostatic and testicular cancers); non-malignant renal disease; non-malignant respiratory disease; neurologic effects; reproductive effects; and other health outcomes (cardiovascular effects, genotoxicity, hematologic effects, immunologic effects, and skeletal effects).

## Conclusion

After careful review of the findings of the IOM Report, *Gulf War and Health: Updated Literature Review of Depleted Uranium,* the Secretary has determined that the scientific evidence presented in the 2008 IOM report and other information available to the Secretary indicates that no new presumption of service connection is warranted at this time for any of the illnesses described in the 2008 IOM report.

Approved: March 1, 2010.

**John R. Gingrich,**

*Chief of Staff, Department of Veterans Affairs.*

[FR Doc. 2010–4882 Filed 3–8–10; 8:45 am]

BILLING CODE 8320–01–P

Federal Register

Tuesday,
March 9, 2010

# Part II

# Department of Energy

## 10 CFR Part 431

## Energy Conservation Program: Energy Conservation Standards for Small Electric Motors; Final Rule

**DEPARTMENT OF ENERGY**

**10 CFR Part 431**

**[Docket Number EERE–2007–BT–STD–0007]**

**RIN 1904–AB70**

## Energy Conservation Program: Energy Conservation Standards for Small Electric Motors

**AGENCY:** Office of Energy Efficiency and Renewable Energy, Department of Energy.

**ACTION:** Final rule.

**SUMMARY:** The U.S. Department of Energy (DOE) is adopting energy conservation standards for small electric motors. DOE has determined that these standards will result in significant conservation of energy, and are technologically feasible and economically justified.

**DATES:** *Effective Date:* The effective date of this rule is April 8, 2010. The standards established in today's final rule will be applicable starting March 9, 2015.

**ADDRESSES:** For access to the docket to read background documents, the technical support document, transcripts of the public meetings in this proceeding, or comments received, visit the U.S. Department of Energy, Resource Room of the Building Technologies Program, 950 L'Enfant Plaza, SW., 6th Floor, Washington, DC 20024, (202) 586–2945, between 9 a.m. and 4 p.m., Monday through Friday, except Federal holidays. Please call Ms. Brenda Edwards at the above telephone number for additional information regarding visiting the Resource Room. (Note: DOE's Freedom of Information Reading Room no longer houses rulemaking materials.) You may also obtain copies of certain previous rulemaking documents in this proceeding (*i.e.,* framework document, notice of public meeting and availability of preliminary technical support document, notice of proposed rulemaking, draft analyses, public meeting materials, and related test procedure documents from the Office of Energy Efficiency and Renewable Energy's Web site at *http://www.eere.energy.gov/buildings/appliance_standards/commercial/small_electric_motors.html).*

**FOR FURTHER INFORMATION CONTACT:** Mr. James Raba, U.S. Department of Energy, Office of Energy Efficiency and Renewable Energy, Building Technologies Program, EE–2J, 1000 Independence Avenue, SW., Washington, DC 20585–0121, (202) 586–8654, e-mail: *Jim.Raba@ee.doe.gov.*

Mr. Michael Kido, U.S. Department of Energy, Office of General Counsel, GC–72, 1000 Independence Avenue, SW., Washington, DC 20585, (202) 586–8145, e-mail: *Michael.Kido@hq.doe.gov.*

**SUPPLEMENTARY INFORMATION:**

### Table of Contents

I. Summary of the Final Rule and Its Benefits
A. Energy Conservation Standards Levels
B. Benefits and Burdens to Customers of Small Electric Motors
C. Impact on Manufacturers
D. National Benefits
E. Conclusion
II. Introduction
A. Authority
B. Background
1. Current Energy Conservation Standards
2. History of Standards Rulemaking for Small Electric Motors
III. General Discussion
A. Test Procedures
B. Technological Feasibility
1. General
2. Maximum Technologically Feasible Levels
C. Energy Savings
D. Economic Justification
1. Specific Criteria
a. Economic Impact on Motor Customers and Manufacturers
b. Life-Cycle Costs
c. Energy Savings
d. Lessening of Utility or Performance of Equipment
e. Impact of Any Lessening of Competition
f. Need of the Nation to Conserve Energy
g. Other Factors
2. Rebuttable Presumption
IV. Methodology and Discussion of Comments on Methodology
A. Market and Technology Assessment
1. Definition of Small Electric Motor
a. Motor Categories
b. Horsepower Ratings
c. Performance Requirements
d. Motor Enclosures
e. Frame Sizes
f. Insulation Class Systems
g. Service Factors
h. Metric Equivalents and Non-Standard Horsepower and Kilowatt Ratings
i. Summary
2. Product Classes
B. Screening Analysis
C. Engineering Analysis
1. Product Classes Analyzed
2. Baseline Models
a. Baseline Efficiencies
b. Baseline Temperature Rise
c. Baseline Motor Performance
3. Higher Efficiency Motor Designs
a. Electrical Steel
b. Thermal Analysis
c. Performance Requirements
d. Stray Load Loss
e. Stack Length and Core Diameter
4. Cost Model
5. Efficiency Scaling
6. Cost-Efficiency Results
D. Markups to Determine Equipment Price
E. Energy Use Characterization
1. Applications
2. Annual Hours of Operation and Motor Loading
F. Life-Cycle Cost and Payback Period Analysis
1. Installation Cost
2. Energy Prices
3. Energy Price Trend
4. Maintenance and Repair Costs
5. Equipment Lifetime
6. Discount Rates
7. Space-Constrained Applications and the After-Market
8. Standard Compliance Date
G. National Impact Analysis—National Energy Savings and Net Present Value Analysis
1. General
2. Shipments
3. Space Constraints
4. Base-Case and Standards-Case Efficiency Distributions
5. Annual Energy Consumption per Unit
H. Customer Sub-Group Analysis
I. Manufacturer Impact Analysis
1. Capital Conversion and Equipment Conversion Costs
2. Manufacturer Selling Prices
3. Markup Scenarios
4. Premium Electrical Steels
J. Employment Impact Analysis
K. Utility Impact Analysis
L. Environmental Assessment
M. Monetizing Carbon Dioxide and Other Emissions Impacts
1. Social Cost of Carbon
a. Monetizing Carbon Dioxide Emissions
b. Social Cost of Carbon Values Used in Past Regulatory Analyses
c. Approach and Key Assumptions
2. Monetary Values of Non-Carbon Emissions
V. Discussion of Other Comments
A. Trial Standard Levels
B. Enforcement
C. Nominal Full-Load Efficiency
VI. Analytical Results and Conclusions
A. Trial Standard Levels
B. Significance of Energy Savings
C. Economic Justification
1. Economic Impact on Motor Customers
a. Life-Cycle Costs and Payback Period
b. Life-Cycle Cost Sensitivity Calculations
c. Customer Subgroup Analysis
d. Rebuttable Presumption Payback
2. Economic Impact on Manufacturers
a. Industry Cash-Flow Analysis Results
b. Impacts on Employment
c. Impacts on Manufacturing Capacity
d. Impacts on Subgroups of Manufacturers
e. Cumulative Regulatory Burden
3. National Net Present Value and Net National Employment
4. Impact on Utility or Performance of Equipment
5. Impact of Any Lessening of Competition
6. Need of the Nation To Conserve Energy
7. Other Factors
D. Conclusion
VII. Procedural Issues and Regulatory Review
A. Review Under Executive Order 12866
B. Review Under the Regulatory Flexibility Act
C. Review Under the Paperwork Reduction Act
D. Review Under the National Environmental Policy Act
E. Review Under Executive Order 13132
F. Review Under Executive Order 12988

G. Review Under the Unfunded Mandates Reform Act of 1995
H. Review Under the Treasury and General Government Appropriations Act, 1999
I. Review Under Executive Order 12630
J. Review Under the Treasury and General Government Appropriations Act, 2001
K. Review Under Executive Order 13211
L. Review Under the Information Quality Bulletin for Peer Review
M. Congressional Notification
VIII. Approval of the Office of the Secretary

## I. Summary of the Final Rule and Its Benefits

### *A. Energy Conservation Standards Levels*

The Energy Policy and Conservation Act, as amended (42 U.S.C. 6291 *et seq.;* EPCA or the Act), directs the U.S. Department of Energy (DOE) to adopt energy conservation standards for those small electric motors for which standards would be technologically feasible and economically justified, and would result in significant energy savings (42 U.S.C. 6317(b)(1)–(2)). The standards in today's final rule satisfy these requirements and will achieve the maximum improvements in energy efficiency that are technologically feasible and economically justified. Table I.1 and Table I.2 show these standard levels, which will apply to all small electric motors manufactured for sale in the United States, or imported into the United States, starting five years after publication of this final rule.

TABLE I.1—STANDARD LEVELS FOR POLYPHASE SMALL ELECTRIC MOTOR

| Motor output power | Six poles | Four poles | Two poles |
|---|---|---|---|
| 0.25 Hp/0.18 kW | 67.5 | 69.5 | 65.6 |
| 0.33 Hp/0.25 kW | 71.4 | 73.4 | 69.5 |
| 0.5 Hp/0.37 kW | 75.3 | 78.2 | 73.4 |
| 0.75 Hp/0.55 kW | 81.7 | 81.1 | 76.8 |
| 1 Hp/0.75 kW | 82.5 | 83.5 | 77.0 |
| 1.5 Hp/1.1 kW | 83.8 | 86.5 | 84.0 |
| 2 Hp/1.5 kW | N/A | 86.5 | 85.5 |
| 3 Hp/2.2 kW | N/A | 86.9 | 85.5 |

* Standard levels are expressed in terms of average full-load efficiency.
** These efficiencies correspond to a modified Trial Standard Level 4b for polyphase motors. For horsepower/pole configurations with efficiency standards higher than the for general purpose electric motors (subtype I), DOE reduced the standard level to align with regulations in 10 CFR 431.25. See section VI for further discussion.

TABLE I.2—STANDARD LEVELS FOR CAPACITOR-START INDUCTION-RUN AND CAPACITOR-START CAPACITOR-RUN SMALL ELECTRIC MOTORS

| Motor output power | Six poles | Four poles | Two poles |
|---|---|---|---|
| 0.25 Hp/0.18 kW | 62.2 | 68.5 | 66.6 |
| 0.33 Hp/0.25 kW | 66.6 | 72.4 | 70.5 |
| 0.5 Hp/0.37 kW | 76.2 | 76.2 | 72.4 |
| 0.75 Hp/0.55 kW | 80.2 | 81.8 | 76.2 |
| 1 Hp/0.75 kW | 81.1 | 82.6 | 80.4 |
| 1.5 Hp/1.1 kW | N/A | 83.8 | 81.5 |
| 2 Hp/1.5 kW | N/A | 84.5 | 82.9 |
| 3 Hp/2.2 kW | N/A | N/A | 84.1 |

* Standard levels are expressed in terms of full-load efficiency.
** These efficiencies correspond to a modified Trial Standard Level 7 for capacitor-start motors. DOE reduced efficiency standards for capacitor-start induction run motors such that they harmonize with adopted capacitor-start capacitor-run motor efficiency standards. See section VI for further discussion.

### *B. Benefits and Burdens to Customers of Small Electric Motors*

Table I.3 presents the implications of today's standards for consumers of small electric motors. The economic impacts of the standards on consumers as measured by the average life-cycle cost (LCC) savings are positive, even though the standards may increase some initial costs. For example, a typical polyphase motor has an average installed price of $517 and average lifetime operating costs (discounted) of $751. To meet the amended standards, DOE estimates that the average installed price of such equipment will increase by $72, which will be more than offset by savings of $100 in average lifetime operating costs (discounted).

TABLE I.3—IMPLICATIONS OF STANDARDS FOR COMMERCIAL CONSUMERS

| Equipment class | Energy conservation standard % | Average installed price* $ | Average installed price increase % | Average life-cycle cost savings $ | Median payback period years |
|---|---|---|---|---|---|
| Polyphase, 1-horsepower, 4-pole | 83.5 | 589 | 72 | 28 | 7.8 |
| Capacitor-start induction-run, ½-horsepower, 4-pole | 76.2 | 996 | 502 | −369 | 12.4 |
| Capacitor-start capacitor-run, ¾-horsepower, 4-pole | 81.8 | 599 | 51 | 24 | 5.9 |

* For a baseline model.

*C. Impact on Manufacturers*

Using a real corporate discount rate of 9.7 percent, which DOE calculated by examining the financial statements of motor manufacturers, DOE estimates the industry net present value (INPV) of the small electric motor manufacturing industry to be $70 million for polyphase small electric motors and $279 million for capacitor-start, or single-phase motors (both figures in 2009$). DOE expects the impact of the standards on the INPV of manufacturers of small electric motors to range from a increase of 4.8 percent to a loss of 7.8 percent (an increase of $3.4 million to a loss of $5.4 million) for polyphase motors and an increase of 6.6 percent to a loss of 12.2 percent (an increase of $32.2 million to a loss of $42.2 million) for single-phase motors. Based on DOE's interviews with the major manufacturers of small electric motors, DOE expects minimal plant closings or loss of employment as a result of the standards.

*D. National Benefits*

The standards will provide significant benefits to the Nation. DOE estimates the standards will save approximately 2.2 quads (quadrillion ($10^{15}$) British thermal units (BTU)) of energy over 30 years (2015–2045). This is equivalent to about 2.2% of total annual U.S. energy consumption.

By 2045, DOE expects the energy savings from the standards to eliminate the need for approximately eight new 250-megawatt (MW) power plants. These energy savings will result in cumulative greenhouse gas emission reductions of approximately 112 million tons (Mt) of carbon dioxide ($CO_2$), or an amount equal to that produced by approximately 25 million new cars in a year. Additionally, the standards will help alleviate air pollution by resulting in approximately 81 thousand tons (kt) of nitrogen oxides ($NO_X$) emission reductions and approximately 0.49 ton of cumulative mercury (Hg) emission reductions from 2015 through 2045. The estimated net present monetary value of these emissions reductions is between $385 and $6,081 million for $CO_2$, (expressed in 2009$). The estimated net present monetary values of these emissions reductions are between $13.2 and $63.4 million for $NO_X$ (expressed in 2009$) and $0.12 and $5.14 million for Hg (expressed in 2009$) at a 7-percent discount rate (discounted to 2010). At a 3 percent discount rate, the estimated net present values of these emissions reductions are between $17.1 and $175.5 million (2009$) for $NO_X$ and $0.22 and $9.66 million (2009$) for Hg.

The national NPV of the standards is $5.3 billion using a seven-percent discount rate and $12.5 billion using a three-percent discount rate, cumulative from 2015 to 2045 in 2009$. This is the estimated total value of future savings minus the estimated increased equipment costs, discounted to the year 2009.

The benefits and costs of today's rule can also be expressed in terms of annualized (2009$) values from 2015–2045. Estimates of annualized values are shown in Table I.4. The annualized monetary values are the sum of the annualized national economic value of operating savings benefits (energy, maintenance and repair), expressed in 2009$, plus the monetary value of the benefits of $CO_2$ emission reductions, otherwise known as the Social Cost of Carbon (SCC), calculated using the average value derived using a 3% discount rate (equivalent to $21.40 per metric ton of $CO_2$ emitted in 2010, in 2007$). This value is a central value from a recent interagency process. The monetary benefits of cumulative emissions reductions are reported in 2009$ so that they can be compared with the other costs and benefits in the same dollar units. The derivation of this value is discussed in section IV.M. Although comparing the value of operating savings to the value of $CO_2$ reductions provides a valuable perspective, please note the following: (1) The national operating savings are domestic U.S. consumer monetary savings found in market transactions while the value of $CO_2$ reductions is based on a global value. Also, note that the central value is only one of four SCC developed by the interagency workgroup. Other marginal SCC values for 2010 are $4.70, $35.10, and $64.90 per metric ton (2007$ for emissions in 2010), which reflect different discount rates and, for the highest value, the possibility of higher-than-expected impacts further out in the tails of the SCC distribution. (2) The assessments of operating savings and $CO_2$ savings are performed with different computer models, leading to different time frames for analysis. The national operating cost savings is measured for the lifetime of small electric motors shipped in the 31-year period 2015–2045. The value of $CO_2$, on the other hand, reflects the present value of all future climate related impacts due to emitting a ton of carbon dioxide in that year, out to 2300.

Using a 7-percent discount rate for the annualized cost analysis, the combined cost of the standards proposed in today's proposed rule for small electric motors is $263.9 million per year in increased equipment and installation costs, while the annualized benefits are $855.1 million per year in reduced equipment operating costs, $115.6 million in $CO_2$ reductions, $3.89 million in reduced $NO_X$ emissions, and $0.30 million in reduced Hg emissions, for a net benefit of $711.0 million per year. Using a 3-percent discount rate, the cost of the standards proposed in today's rule is $263.7 million per year in increased equipment and installation costs, while the benefits of today's standards are $989.5 million per year in reduced operating costs, $115.6 million in $CO_2$ reductions, $5.58 million in reduced $NO_X$ emissions, and $0.29 million in reduced Hg emissions, for a net benefit of $847.3 million per year.

TABLE I.4—ANNUALIZED BENEFITS AND COSTS FOR SMALL ELECTRIC MOTORS

| Category | Primary estimate (AEO reference case) | Low estimate (low energy price case) | High estimate (high energy price case) | Units | | |
|---|---|---|---|---|---|---|
| | | | | Year dollars | Disc. rate | Period covered |
| **Benefits** | | | | | | |
| Energy Annualized Monetized (millions$/year). | 855.1 | 831.8 | 870.3 | 2009 | 7% | 31 |
| | 989.5 | 964.8 | 1000.5 | 2009 | 3% | 31 |
| Annualized Quantified | 2.29 $CO_2$ (Mt) | 2.29 $CO_2$ (Mt) | 2.29 $CO_2$ (Mt) | NA | 7% | 31 |
| | 1.55 $NO_X$ (kt) | 1.55 $NO_X$ (kt) | 1.55 $NO_X$ (kt) | NA | 7% | 31 |
| | 0.017 Hg (t) | 0.017 Hg (t) | 0.017 Hg (t) | NA | 7% | 31 |
| | 3.13 $CO_2$ (Mt) | 3.13 $CO_2$ (Mt) | 3.13 $CO_2$ (Mt) | NA | 3% | 31 |
| | 2.22 $NO_X$ (kt) | 2.22 $NO_X$ (kt) | 2.22 $NO_X$ (kt) | NA | 3% | 31 |
| | 0.017 Hg (t) | 0.017 Hg (t) | 0.017 Hg (t) | NA | 3% | 31 |

TABLE I.4—ANNUALIZED BENEFITS AND COSTS FOR SMALL ELECTRIC MOTORS—Continued

| Category | Primary estimate (AEO reference case) | Low estimate (low energy price case) | High estimate (high energy price case) | Units | | |
|---|---|---|---|---|---|---|
| | | | | Year dollars | Disc. rate | Period covered |
| $CO_2$ Monetized Value (at $4.7/Metric Ton, millions$/year)*. | 31.5 | 31.5 | 31.5 | 2009 | 5% | 31 |
| $CO_2$ Monetized Value (at $21.4/Metric Ton, millions$/year)*. | 115.6 | 115.6 | 115.6 | 2009 | 3% | 31 |
| $CO_2$ Monetized Value (at $35.1/Metric Ton, millions$/year)*. | 179.2 | 179.2 | 179.2 | 2009 | 2.5% | 31 |
| $CO_2$ Monetized Value (at $64.9/Metric Ton, millions$/year)*. | 352.5 | 352.5 | 352.5 | 2009 | 3% | 31 |
| $NO_X$ Monetized Value (at $2,437/Metric Ton, millions$/year). | 3.89 | 3.89 | 3.89 | 2009 | 7% | 31 |
| | 5.58 | 5.58 | 5.58 | 2009 | 3% | 31 |
| Hg Monetized Value (at $17 million/Metric Ton, millions$/year). | 0.3 | 0.3 | 0.3 | 2009 | 7% | 31 |
| | 0.29 | 0.29 | 0.29 | 2009 | 3% | 31 |
| Total Monetary Benefits (millions$/year)**. | 890.8–1211.8 | 867.5–1188.5 | 906.0–1227.0 | 2009 | 7% Range | 31 |
| | 974.9 | 951.6 | 990.1 | 2009 | 7% | 31 |
| | 1111.0 | 1086.3 | 1121.9 | 2009 | 3% | 31 |
| | 1026.9–1347.9 | 1002.2–1323.2 | 1037.8–1358.8 | 2009 | 3% Range | 31 |
| **Costs** | | | | | | |
| Annualized Monetized (millions$/year) | 263.9 | 263.9 | 263.9 | 2009 | 7% | 31 |
| | 263.7 | 263.7 | 263.7 | 2009 | 3% | 31 |
| **Net Benefits/Costs** | | | | | | |
| Annualized Monetized, including $CO_2$ Benefits (million$/year)**. | 626.9–947.9 | 603.6–924.6 | 642.1–963.1 | 2009 | 7% Range | 31 |
| | 711.0 | 687.7 | 726.2 | 2009 | 7% | 31 |
| | 847.3 | 822.6 | 858.3 | 2009 | 3% | 31 |
| | 763.2–1084.3 | 738.5–1059.6 | 774.2–1095.2 | 2009 | 3% Range | 31 |

* These values represent global values (in 2007$) of the social cost of $CO_2$ emissions in 2010 under several scenarios. The values of $4.7, $21.4, and $35.1 per ton are the averages of SCC distributions calculated using 5%, 3%, and 2.5% discount rates, respectively. The value of $64.9 per ton represents the 95th percentile of the SCC distribution calculated using a 3% discount rate. See section IV.M for details.

** Total Monetary Benefits for both the 3% and 7% cases utilize the central estimate of social cost of $CO_2$ emissions calculated at a 3% discount rate (averaged across three IAMs), which is equal to $21.4/ton in 2010 (in 2007$). The rows labeled as "7% Range" and "3% Range" calculate consumer, Hg, and $NO_X$ cases with the labeled discount rate but add these values to the full range of $CO_2$ values with the $4.7/ton value at the low end, and the $64.9/ton value at the high end.

*E. Conclusion*

DOE has concluded that the benefits (energy savings, consumer LCC savings, national NPV increases, and emissions reductions) to the Nation of today's standards for small electric motors outweigh their costs (loss of manufacturer INPV and consumer LCC increases for some users of small electric motors). DOE has also concluded that these standards are technologically feasible and economically justified, and will result in significant energy savings. Small electric motors that are commercially available or working prototypes use or have used the technologies needed to meet the new standard levels.

## II. Introduction

*A. Authority*

Title III of EPCA sets forth a variety of provisions designed to improve energy efficiency. Part A of Title III (42 U.S.C. 6291–6309) provides for the Energy Conservation Program for Consumer Products Other than Automobiles. Part A–1 of Title III (42 U.S.C. 6311–6317) establishes a similar program for "Certain Industrial Equipment," which includes small electric motors, the subject of this rulemaking.[1] DOE publishes today's final rule pursuant to Part A–1 of Title III, which provides for test procedures, labeling, and energy conservation standards for small electric motors and certain other equipment, and authorizes DOE to require information and reports from manufacturers. The test procedures DOE recently adopted for small electric motors, 74 FR 32059 (July 7, 2009), appear at Title 10, Code of Federal Regulations (CFR), sections 431.443, 431.444, and 431.445.

The Act defines "small electric motor" as follows:

> [A] NEMA [National Electrical Manufacturers Association] general purpose alternating current single-speed induction motor, built in a two-digit frame number series in accordance with NEMA Standards Publication MG1–1987.

[1] These two parts were titled Parts B and C in EPCA, but were codified as Parts A and A–1 in the United States Code for editorial reasons.

(42 U.S.C. 6311(13)(G)) EPCA requires DOE to prescribe energy conservation standards for those small electric motors for which DOE: (1) Has determined that standards would be technologically feasible and economically justified and would result in significant energy savings, and (2) has prescribed test procedures. (42 U.S.C. 6317(b)) However, pursuant to section 346(b)(3) of EPCA (42 U.S.C. 6317(b)(3)), no standard prescribed for small electric motors shall apply to any such motor that is a component of a covered product under section 322(a) of EPCA (42 U.S.C. 6292(a)), or of covered equipment under section 340 (42 U.S.C. 6311).

Additionally, EPCA requires DOE, in establishing standards for small electric motors, to consider whether the standards themselves will result in a significant conservation of energy, are technologically feasible, and are cost effective as described in 42 U.S.C. 6295(o)(2)(B)(i). (42 U.S.C. 6316(a)) These criteria, along with requirements that any standards be economically justified, are largely incorporated into

42 U.S.C. 6295(o), which sets forth the criteria for prescribing standards for "covered products," *i.e.,* consumer products as defined in EPCA. (42 U.S.C. 6291(1) and (2)) Under 42 U.S.C. 6316(a), portions of 42 U.S.C. 6295, including subsection (o), also apply when DOE promulgates standards for certain specified commercial and industrial equipment—"covered equipment" as defined in EPCA (42 U.S.C. 6311(1))—including small electric motors. (EPCA states that the term "equipment" shall be substituted for "product" in applying the consumer product-related provisions of EPCA to commercial and industrial equipment. (42 U.S.C. 6316(a)(3))

Therefore, as indicated above, DOE analyzed whether today's standards for small electric motors will achieve the maximum improvement in energy efficiency that is technologically feasible and economically justified. (42 U.S.C. 6295(o)(2)(A)) Additionally, DOE examined whether each of today's standards for this equipment is economically justified, after receiving comments on the proposed standards, by determining whether the benefits of the standard exceed its burdens by considering, to the greatest extent practicable, the following seven factors that are set forth in 42 U.S.C. 6295(o)(2)(B)(i):

1. The economic impact of the standard on manufacturers and consumers of the equipment subject to the standard;
2. The savings in operating costs throughout the estimated average life of the covered equipment in the type (or class) compared to any increase in the price, initial charges, or maintenance expenses for the covered equipment that are likely to result from the imposition of the standard;
3. The total projected amount of energy savings likely to result directly from the imposition of the standard;
4. Any lessening of the utility or the performance of the covered equipment likely to result from the imposition of the standard;
5. The impact of any lessening of competition, as determined in writing by the Attorney General, that is likely to result from the imposition of the standard;
6. The need for national energy conservation; and
7. Other factors the Secretary [of Energy] considers relevant.

In developing today's energy conservation standards, DOE also has applied certain other provisions of 42 U.S.C. 6295 as it is required to do. First, DOE would not prescribe a standard for small electric motors if interested persons established by a preponderance of the evidence that the standard is likely to result in the unavailability in the United States of any type (or class) of this product with performance characteristics, features, sizes, capacities, and volume that are substantially the same as those generally available in the United States. (42 U.S.C. 6295(o)(4))

Second, DOE has applied 42 U.S.C. 6295(o)(2)(B)(iii), which establishes a rebuttable presumption that a standard is economically justified if the Secretary finds that "the additional cost to the consumer of purchasing a product complying with an energy conservation standard level will be less than three times the value of the energy * * * savings during the first year that the consumer will receive as a result of the standard, as calculated under the applicable test procedure."

Third, in setting standards for a type or class of equipment that has two or more subcategories, DOE specifies a different standard level than that which applies generally to such type or class of equipment "for any group of covered products which have the same function or intended use, if * * * products within such group—(A) consume a different kind of energy from that consumed by other covered products within such type (or class); or (B) have a capacity or other performance-related feature which other products within such type (or class) do not have and such feature justifies a higher or lower standard" than applies or will apply to the other products. (42 U.S.C. 6295(q)(1)) In determining whether a performance-related feature justifies such a different standard for a group of products, DOE considers such factors as the utility to the consumer of such a feature and other factors DOE deems appropriate. Any rule prescribing such a standard must include an explanation of the basis on which DOE establishes such higher or lower level. (42 U.S.C. 6295(q)(2))

Federal energy efficiency requirements for equipment covered under EPCA generally supersede State laws or regulations concerning energy conservation testing, labeling, and standards. (42 U.S.C. 6297(a)–(c) and 42 U.S.C. 6316(a)) DOE can, however, grant waivers of preemption for particular State laws or regulations, in accordance with the procedures and other provisions of section 327(d) of the Act. (42 U.S.C. 6297(d) and 42 U.S.C. 6316(a))

*B. Background*

1. Current Energy Conservation Standards

As indicated above, at present there are no national energy conservation standards for small electric motors.

2. History of Standards Rulemaking for Small Electric Motors

To determine the small electric motors for which energy conservation standards would be technologically feasible and economically justified, and would result in significant energy savings, DOE first concluded that the EPCA definition of "small electric motor" covers only those motors that meet the definition's frame-size requirements, and that are either three-phase, non-servo motors (referred to below as polyphase motors) or single-phase, capacitor-start motors, including both capacitor-start, induction run (CSIR) and capacitor-start, capacitor-run (CSCR) motors. 71 FR 38799, 38800–01 (July 10, 2006). In June 2006, DOE issued a report in which it analyzed and estimated the likely range of energy savings and economic benefits that would result from standards for these motors.[2] The report did not address motors that are a component of a covered product or equipment, consistent with 42 U.S.C. 6317. After receiving comments on the report, DOE performed further analysis to determine whether standards are warranted for small electric motors and then issued the following determination on June 27, 2006:

> Based on its analysis of the information now available, the Department [of Energy] has determined that energy conservation standards for certain small electric motors appear to be technologically feasible and economically justified, and are likely to result in significant energy savings. Consequently, the Department [of Energy] will initiate the development of energy efficiency test procedures and standards for certain small electric motors. 71 FR 38807.

Thereafter, in 2007, DOE initiated this rulemaking by issuing and seeking public comment on the "Energy Conservation Standards Rulemaking Framework Document for Small Electric Motors," which described the approaches DOE anticipated using to develop energy conservation standards for small electric motors and the issues to be resolved in the rulemaking. See 72 FR 44990 (August 10, 2007). This document is also available on the aforementioned DOE Web site. On September 13, 2007, DOE held a public

[2] *http://www1.eere.energy.gov/buildings/appliance_standards/commercial/pdfs/small_motors_tsd.pdf.*

meeting to present the contents of the framework document, describe the analyses DOE planned to conduct during the rulemaking, obtain public comment on these subjects, and facilitate the public's involvement in the rulemaking. Manufacturers, trade associations, electric utilities, environmental advocates, regulators, and other interested parties provided comments at this meeting, and submitted written comments, on the Framework Document. They addressed a range of issues.

On December 19, 2008, after having considered these comments, gathering additional information, and performing preliminary analyses as to standards for small electric motors, DOE announced an informal public meeting and the availability on its Web site of a preliminary technical support document (preliminary TSD). 73 FR 79723 (December 30, 2008). The preliminary TSD discussed the comments DOE had received in this rulemaking and described the actions DOE had taken, the analytical framework DOE was using, and the content and results of DOE's preliminary analyses. *Id.* at 79724–25. DOE's preliminary analyses were largely based on comments received from industry; including those focusing on what constitutes small electric motors and corresponding shipment estimates. DOE convened the public meeting to discuss, and receive comments on, these subjects, DOE's proposed product classes, potential standard levels that DOE might consider, and other issues participants believed were relevant to the rulemaking. *Id.* at 79723, 79725. DOE also invited written comments on all of these matters. The public meeting took place on January 30, 2009. Eighteen interested parties participated, and ten submitted written comments during the comment period.

On November 24, 2009, DOE published a notice of proposed rulemaking (NOPR) to establish small electric motor energy conservation standards. 74 FR 61410. Shortly after, DOE also published on its Web site the complete technical support document (TSD) for the proposed rule, which incorporated the completed analyses DOE conducted and technical documentation for each analysis. These analyses were developed using, in part, NEMA-supplied data. The TSD included the LCC spreadsheet, the national impact analysis spreadsheet, and the manufacturer impact analysis (MIA) spreadsheet—all of which are available at *http://www.eere.energy.gov/buildings/appliance_standards/commercial/small_electric_motors.html.* The energy efficiency standards DOE proposed in the NOPR were as follows:

TABLE II.1—PROPOSED STANDARD LEVELS FOR POLYPHASE SMALL ELECTRIC MOTORS

| Motor output power | Six poles | Four poles | Two poles |
|---|---|---|---|
| 0.25 Hp/0.18 kW | 77.4 | 72.7 | 69.8 |
| 0.33 Hp/0.25 kW | 79.1 | 75.6 | 73.7 |
| 0.5 Hp/0.37 kW | 81.1 | 80.1 | 76.0 |
| 0.75 Hp/0.55 kW | 84.0 | 83.5 | 81.6 |
| 1 Hp/0.75 kW | 84.2 | 85.2 | 83.6 |
| 1.5 Hp/1.1 kW | 85.2 | 87.1 | 86.6 |
| 2 Hp/1.5 kW | 89.2 | 88.0 | 88.2 |
| ≥3 Hp/2.2 kW | 90.8 | 90.0 | 90.5 |

* Standard levels are expressed in terms of full-load efficiency.
** These efficiencies corresponded to NOPR Trial Standard Level 5 for polyphase motors.

TABLE II.2—PROPOSED STANDARD LEVELS FOR CAPACITOR-START INDUCTION-RUN SMALL ELECTRIC MOTORS

| Motor output power | Six poles | Four poles | Two poles |
|---|---|---|---|
| 0.25 Hp/0.18 kW | 65.4 | 69.8 | 71.4 |
| 0.33 Hp/0.25 kW | 70.7 | 72.8 | 74.2 |
| 0.5 Hp/0.37 kW | 77.0 | 77.0 | 76.3 |
| 0.75 Hp/0.55 kW | 81.0 | 80.9 | 78.1 |
| 1 Hp/0.75 kW | 84.1 | 82.8 | 80.0 |
| 1.5 Hp/1.1 kW | 87.7 | 85.5 | 82.2 |
| 2 Hp/1.5 kW | 89.8 | 86.5 | 85.0 |
| ≥3 Hp/2.2 kW | 92.2 | 88.9 | 85.6 |

* Standard levels are expressed in terms of full-load efficiency.
** These efficiencies corresponded to NOPR Trial Standard Level 7 for capacitor-start motors.

TABLE II.3—PROPOSED STANDARD LEVELS FOR CAPACITOR-START CAPACITOR-RUN SMALL ELECTRIC MOTORS

| Motor output power | Six poles | Four poles | Two poles |
|---|---|---|---|
| 0.25 Hp/0.18 kW | 63.9 | 68.3 | 70.0 |
| 0.33 Hp/0.25 kW | 69.2 | 71.6 | 72.9 |
| 0.5 Hp/0.37 kW | 75.8 | 76.0 | 75.1 |
| 0.75 Hp/0.55 kW | 79.9 | 80.3 | 77.0 |
| 1 Hp/0.75 kW | 83.2 | 82.0 | 79.0 |
| 1.5 Hp/1.1 kW | 87.0 | 84.9 | 81.4 |
| 2 Hp/1.5 kW | 89.1 | 86.1 | 84.2 |
| ≥3 Hp/2.2 kW | 91.7 | 88.5 | 84.9 |

* Standard levels are expressed in terms of full-load efficiency.
** These efficiencies corresponded to NOPR Trial Standard Level 7 for capacitor-start motors.

In the NOPR, DOE also identified issues on which it was particularly interested in receiving the comments and views of interested parties. DOE requested comment on the proposed energy efficiency levels for polyphase and single-phase motors, product classes, covered insulation class systems, its selection of baseline models, markups used in the engineering analysis, design option and limitations used in the engineering analysis, the approach to scaling the results of the engineering analysis, the proposed definition of nominal efficiency, the manufacturer impact analysis scenarios, capital investment costs used, market interaction between CSIR and CSCR motors, market response to standards, behavior of customers with space constraints, the combined effect of certain market assumptions, the appropriateness of other discount rates besides seven and three percent to discount future emissions, and the anticipated environmental impacts. The NOPR also included additional background information on the history of this rulemaking. 74 FR 61416–17.

DOE held a public meeting in Washington, DC on December 17, 2009, to hear oral comments on, and solicit information relevant to, the proposed rule. DOE has also received written comments and information in response to the NOPR.

## III. General Discussion

### *A. Test Procedures*

On July 7, 2009, DOE published a final rule that incorporated by reference Institute of Electrical and Electronics Engineers, Inc. (IEEE) Standard 112–2004 (Test Method A and Test Method B), IEEE Standard 114–2001, and Canadian Standards Association Standard C747–94 as the DOE test procedures to measure energy efficiency small electric motors. 74 FR 32059.

In addition to incorporating by reference the above industry standard test procedures, the small electric motors test procedure final rule also codified the statutory definition for the term "small electric motor;" clarified the definition of the term "basic model"; and the relationship of the term to certain product classes and compliance certification reporting requirements; and codified the ability of manufacturers to use an alternative efficiency determination method (AEDM) to reduce testing burden when certifying their equipment as compliant but maintaining efficiency measurement accuracy and ensuring compliance with potential future energy conservation standards. The test procedure notice also discussed matters of laboratory accreditation, compliance certification, and enforcement of energy conservation standards for small electric motors.

DOE notes that complete certification and enforcement provisions for small electric motors have not yet been developed. DOE intends to propose such provisions in a separate test procedure supplementary NOPR, at which time DOE will invite comments on how small electric motor efficiency standards can be effectively enforced. Section V.B of this final rule summarizes comments received in response to the NOPR that will be further addressed in the test procedure supplemental NOPR.

### *B. Technological Feasibility*

#### 1. General

As stated above, any standards that DOE establishes for small electric motors must be technologically feasible. (42 U.S.C. 6295(o)(2)(A); 42 U.S.C. 6316(a)) DOE considers a design option to be technologically feasible if it is in use by the respective industry or if research has progressed to the development of a working prototype. "Technologies incorporated in commercially available equipment or in working prototypes will be considered technologically feasible." 10 CFR part 430, subpart C, appendix A, section 4(a)(4)(i). This final rule considers the same design options as those evaluated in the NOPR. (See chapter 5 of the TSD.) All the evaluated technologies have been used (or are being used) in commercially available products or working prototypes. Therefore, DOE has determined that all of the efficiency levels evaluated in this notice are technologically feasible.

#### 2. Maximum Technologically Feasible Levels

As required by EPCA, (42 U.S.C. 6295(p)(1) and 42 U.S.C. 6316(a)), in developing the NOPR, DOE identified the efficiency levels that would achieve the maximum improvements in energy efficiency that are technologically feasible (max-tech levels) for small electric motors. 74 FR 61418. Table III.1 lists the max-tech levels that DOE determined for this rulemaking. DOE identified these levels as part of the engineering analysis (chapter 5 of the TSD), using the most efficient design parameters that lead to the highest full-load efficiencies for small electric motors.

TABLE III.1—MAX-TECH EFFICIENCY LEVELS FOR REPRESENTATIVE PRODUCT CLASSES *

| Motor category | Poles | Horsepower | Efficiency % |
|---|---|---|---|
| Polyphase | 4 | 1 | 87.7 |
| CSIR | 4 | 0.5 | 77.6 |
| CSCR | 4 | 0.75 | 87.5 |

* These max-tech efficiency levels are only for the representative product classes described in section IV.C.2. Max-tech efficiency levels for the remaining product classes are determined using the scaling methodology outlined in section IV.C.5.

DOE developed maximum technologically feasible efficiencies by creating motor designs for each product class analyzed, which use all the viable design options that DOE considered. The efficiency levels shown in Table III.1 correspond to designs that use a maximum increase in stack length, a copper rotor design, a premium electrical steel (Hiperco 50), a maximum slot-fill percentage (65-percent), a change in run-capacitor rating (CSCR motors only), and an optimized end ring design. All of the design options used to create these max-tech motors remain in the analysis and are options that DOE considers technologically feasible.

### *C. Energy Savings*

DOE forecasted energy savings in its national energy savings (NES) analysis, through the use of an NES spreadsheet tool, as discussed in the NOPR. 74 FR 61418, 61440–42, 61470–72.

One of the criteria that govern DOE's adoption of standards for small electric motors is that the standard must result in "significant" energy savings. (42 U.S.C. 6317(b)) While the term "significant" is not defined by EPCA, a D.C. Circuit indicated that Congress intended "significant" energy savings to be savings that were not "genuinely

trivial." *Natural Resources Defense Council* v. *Herrington,* 768 F.2d 1355, 1373 (D.C. Cir. 1985) The energy savings for the standard levels DOE is adopting today are non-trivial, and therefore DOE considers them "significant" as required by 42 U.S.C. 6317.

*D. Economic Justification*

1. Specific Criteria

The following section discusses how DOE has addressed each of the seven factors that it uses to determine if energy conservation standards are economically justified.

a. Economic Impact on Motor Customers and Manufacturers

DOE considered the economic impact of today's new standards on purchasers and manufacturers of small electric motors. For purchasers of small electric motors, DOE measured the economic impact as the change in installed cost and life-cycle operating costs, *i.e.,* the LCC. (See section IV.F of this preamble, and chapter 12 of the TSD.) DOE investigated the impacts on manufacturers through the manufacturer impact analysis (MIA). (See sections IV.I and VI.C.2 of this preamble and chapter 13 of the TSD.) The economic impact on purchasers and manufacturers is discussed in detail in the NOPR. 74 FR 61418–19, 61436–40, 61442–46, and 61454–70.

b. Life-Cycle Costs

DOE considered life-cycle costs of small electric motors, as discussed in the NOPR. 74 FR 61436–40, 61442, 61454–64. In considering these costs, DOE calculated the sum of the purchase price and the operating expense—discounted over the lifetime of the equipment—to estimate the range in LCC savings that small motors purchasers would expect to achieve due to the standards.

c. Energy Savings

Although significant conservation of energy is a separate statutory requirement for imposing an energy conservation standard, EPCA also requires DOE, in determining the economic justification of a standard, to consider the total projected energy savings that are expected to result directly from the standard. (42 U.S.C. 6295(o)(2)(B)(i)(III) and 42 U.S.C. 6316(a)) As in the NOPR (74 FR 61440–42, 61470–72), for today's final rule, DOE used the NES spreadsheet results in its consideration of total projected energy savings that are directly attributable to the standard levels DOE considered.

d. Lessening of Utility or Performance of Equipment

In selecting today's standard levels, DOE avoided selection of standards that lessen the utility or performance of the equipment under consideration in this rulemaking. (See 42 U.S.C. 6295(o)(2)(B)(i)(IV) and 42 U.S.C. 6316(a)) 74 FR 61419, 61476. The efficiency levels DOE considered maintain both motor performance and power factor in order to preserve consumer utility. DOE considered end-user size constraints by developing designs with size increase restrictions (limited to a 20-percent increase in stack length), as well as designs with less stringent constraints (100-percent increase in stack length). The designs adhering to the 20-percent increase in stack length maintain all aspects of consumer utility and were created for all efficiency levels, but these designs may become very expensive at higher efficiency levels when compared with DOE's other designs.

e. Impact of Any Lessening of Competition

DOE considered any lessening of competition that is likely to result from standards. As discussed in the NOPR, 74 FR 61419, 61476, and as required under EPCA, DOE requested that the Attorney General transmit to the Secretary a written determination of the impact, if any, of any lessening of competition likely to result from the standards proposed in the NOPR, together with an analysis of the nature and extent of such impact. (42 U.S.C. 6295(o)(2)(B)(i)(V) and (B)(ii) and 42 U.S.C. 6316(a))

To assist the Attorney General in making such a determination, DOE provided the Department of Justice (DOJ) with copies of the November 24, 2009 proposed rule and the NOPR TSD for review. The Attorney General's response is discussed in IV.F.7 below, and is reprinted at the end of this rule. DOJ concluded that TSL 5 for polyphase small electric motors and TSL 7 for single-phase small electric motors are likely to affect the replacement market for certain applications. DOJ requested that DOE consider this potential impact and, as warranted, allow exemptions from the proposed standard levels the manufacture and marketing of certain replacement small electric motors.

f. Need of the Nation To Conserve Energy

In considering standards for small electric motors, the Secretary must consider the need of the Nation to conserve energy. (42 U.S.C. 6295(o)(2)(B)(i)(VI) and 42 U.S.C. 6316(a)) The Secretary recognizes that energy conservation benefits the Nation in several important ways. The non-monetary benefits of the standard are likely to be reflected in improvements to the security and reliability of the Nation's energy system. Today's standard will also result in environmental benefits. As discussed in the NOPR, 74 FR 61419, 61447–61453, 61476–61484, and in section VI.C.6 of this final rule, DOE considered these factors in adopting today's standards.

g. Other Factors

The Secretary of Energy, in determining whether a standard is economically justified, considers any other factors that the Secretary of Energy deems relevant. (42 U.S.C. 6295(o)(2)(B)(i)(VII) and 42 U.S.C. 6316(a)) In adopting today's standards, the Secretary considered the following: (1) Harmonization of standards for small electric motors with existing standards under EPCA for medium-sized polyphase general purpose motors; (2) the impact, on consumers who need to use CSIR motors, and on the prices for such motors at potential standard levels; and (3) the potential for standards to reduce reactive power demand and thereby lower costs for supplying electricity.[3] 74 FR 61419–20, 61484. These issues are addressed in section VI.C.7 below.

2. Rebuttable Presumption

Section 325(o)(2)(B)(iii) of EPCA states that there is a rebuttable presumption that an energy conservation standard is economically justified if the increased installed cost for a product that meets the standard is less than three times the value of the first-year energy savings resulting from the standard, as calculated under the applicable DOE test procedure. (42 U.S.C. 6295(o)(2)(B)(iii) and 42 U.S.C. 6316(a)) DOE's LCC and payback period (PBP) analyses generate values that calculate the PBP of potential energy conservation standards. The calculation includes, but is not limited to, the three-year PBP contemplated under the rebuttable presumption test just described. However, DOE routinely

[3] In an alternating current power system, the reactive power is the root mean square (RMS) voltage multiplied by the RMS current, multiplied by the sine of the phase difference between the voltage and the current. Reactive power occurs when the inductance or capacitance of the load shifts the phase of the voltage relative to the phase of the current. While reactive power does not consume energy, it can increase losses and costs for the electricity distribution system. Motors tend to create reactive power because the windings in the motor coils have high inductance.

conducts a full economic analysis that considers the full range of impacts, including those to the customer, manufacturer, Nation, and environment, as required under 42 U.S.C. 6295(o)(2)(B)(i) and 42 U.S.C. 6316(a). The results of this analysis serve as the basis for DOE to evaluate definitively the economic justification for a potential standard level (thereby supporting or rebutting any presumption of economic justification).

## IV. Methodology and Discussion of Comments on Methodology

DOE used several analytical tools that it developed previously and adapted for use in this rulemaking. One is a spreadsheet that calculates LCC and PBP. Another tool calculates national energy savings and national NPV that would result from the adoption of energy conservation standards. DOE also used the Government Regulatory Impact Model (GRIM), along with other data obtained from interviews with manufacturers, in its MIA to determine the impacts of standards on manufacturers. Finally, DOE developed an approach using the National Energy Modeling System (NEMS) to estimate impacts of standards for small electric motors on electric utilities and the environment. The NOPR discusses each of these analytical tools in detail, 74 FR 61420, 61436–53, as does the TSD.

As a basis for this final rule, DOE has continued to use the spreadsheets and approaches explained in the NOPR. DOE used the same general methodology as applied in the NOPR, but revised some of the assumptions and inputs for the final rule in response to public comments. DOE also added new analysis based on the comments it received from interested parties. The following paragraphs address these revisions.

### *A. Market and Technology Assessment*

When beginning an energy conservation standards rulemaking, DOE develops information that provides an overall picture of the market for the equipment concerned, including the purpose of the equipment, the industry structure, and market characteristics. This activity includes both quantitative and qualitative assessments based primarily on publicly available information. The subjects addressed in the market and technology assessment for this rulemaking include scope of coverage, product classes, manufacturers, quantities, and types of equipment sold and offered for sale; retail market trends; and regulatory and non-regulatory programs. See chapter 3 of the TSD for further discussion of the market and technology assessment.

#### 1. Definition of Small Electric Motor

EPCA defines a small electric motor as "a NEMA general purpose alternating current single-speed induction motor, built in a two-digit frame number series in accordance with NEMA Standards Publication MG1–1987." 42 U.S.C. 6311(13)(G). NEMA Standards Publication MG1–1987 is an industry guidance document that addresses, among other things, various aspects related to small and medium electric motors. As denoted in the title, this version of MG1 was prepared in 1987, more than 20 years before the date of today's final rule. NEMA has since published updated versions of this document, the latest of which was released in 2006. Of particular significance is the difference in what was considered in 1987 a general purpose, alternating current motor (only open construction motors) compared to what NEMA currently considers a general purpose alternating current motor (both open and enclosed construction motors).[4]

DOE explained its view in the NOPR as to how it currently reads 42 U.S.C. 6311(13)(G). 74 FR 61421. DOE indicated that the statute refers to MG1–1987 for purposes of ascertaining what constitutes a small electric motor. The agency explained and articulated certain assumptions in the NOPR regarding the scope of categories of motors, frame sizes, performance characteristics, insulation systems, and motor enclosures that it examined within the proposed scope of this rulemaking.

DOE received several comments criticizing the scope of DOE's coverage in its analyses. Manufacturers indicated that DOE's scope was too broad because, in their view, many of the motors DOE examined in ascertaining the energy savings potential for small electric motors, were not small electric motors under MG1–1987. For example, Emerson commented that in order for standards to be enforceable, DOE should adhere strictly to MG1–1987 in defining scope. (Emerson, No. 28 at p. 2) NEMA made similar comments echoing the same concern and argued that DOE's analysis should have been limited to the performance characteristics contained in MG1–1987. (See, *e.g.,* NEMA, No. 8 at pp. 2–5)

In contrast, Earthjustice and UL both commented that DOE was unnecessarily constraining itself by adhering to NEMA MG1–1987. See Earthjustice, Public Meeting Transcript, No. 20.4 at pp. 49–50; UL, Public Meeting Transcript, No. 20.4 at pp. 89–90. UL asserted that DOE's scope would create a negligible impact on the market, which has been shifting from the motors covered under the NOPR to other motor types (such as electronically commutated motors). (UL, Public Meeting Transcript, No. 20.4 at p. 182, UL, No. 21 at pp. 2) Earthjustice advised DOE that it should expand the scope of the rulemaking to include any "covered equipment" that it finds are justified. (Earthjustice, No. 22 at pp. 1–3) It had also noted during the preliminary analysis public meeting, that DOE could adopt a different reading of the definition by applying the phrase MG1–1987 only to the two digit frame number series requirement. Earthjustice, Public Meeting Transcript, at 47–49 (January 30, 2009).

After careful consideration of all of the comments, DOE believes that its scope of coverage in this final rule is appropriate. As such, DOE is declining to revise its scope of coverage for this equipment within this rulemaking. While DOE is continuing to adhere to the approach proposed in its NOPR and accompanying TSD, DOE may revisit this issue in the future and re-examine its interpretation of the small electric motor definition in 42 U.S.C. 6311(13)(G). Any such re-examination would be performed within the context of the rulemaking process and offer an opportunity for public comment.

##### a. Motor Categories

The motor categories examined by DOE are tied in part to the terminology and performance requirements in NEMA MG1–1987. These requirements were established for (1) general-purpose alternating-current motors, (2) single-speed induction motors, and (3) the NEMA system for designating (two-digit) frame sizes. Single-speed induction motors, as delineated and described in MG1–1987, fall into five categories: split-phase, shaded-pole, capacitor-start (both CSIR and CSCR), permanent-split capacitor (PSC), and polyphase. Of these five motor categories, DOE determined for purposes of this rulemaking that only CSIR, CSCR, and polyphase motors are able to meet performance requirements in NEMA MG1 and are widely considered general purpose alternating current motors, as shown by the listings found in manufacturers' catalogs. Therefore, in the NOPR DOE proposed

[4] An open motor is constructed with ventilating openings that permit external cooling air to pass over and around the windings of the motor. An enclosed motor is constructed to prevent the free exchange of air between the inside and outside of the housing.

to only cover those three motor categories.

Underwriters Laboratories stated that they believe DOE should cover the split-phase, shaded-pole, and PSC motor categories because they are much more common in the current market. (Underwriters Laboratories, No. 21 at p. 2) It is DOE's understanding that the motors suggested for coverage by UL do not meet the requirements for a NEMA general purpose motors and, consequently, are outside the scope of this rulemaking despite being more common. As a result, DOE continues to maintain that CSIR, CSCR, and polyphase motors are the only motor categories that are general purpose motors for purposes of this rulemaking.

b. Horsepower Ratings

In DOE's preliminary and NOPR analyses on small electric motors, DOE presented a range of horsepower ratings from ¼-horsepower up to 3-horsepower. The range of horsepower ratings was the same for all three motor categories covered: CSIR, CSCR, and polyphase motors as well as all three pole configurations: Two, four, and six. This range of horsepower ratings was consistent with what DOE believed to be the range of ratings where manufacturers build NEMA general purpose motors in a two-digit frame number series.

In response to the NOPR, NEMA and Baldor commented that the horsepower range for the products classes DOE proposed was incorrect. Baldor stated that horsepower ratings higher than ½-horsepower for six-pole motors, ¾-horsepower for four-pole motors, and 1-horsepower for two-pole motors are not standard ratings for small electric motors as defined in NEMA MG1, in particular, as listed in Table 10–1 of MG1–1987. Therefore, NEMA and Baldor stated that motors with such ratings are not NEMA general purpose motors and should be excluded from DOE's scope of coverage. (Baldor, Public Meeting Transcript, No. 20.4 at pp. 38–41; NEMA, No. 24 at pp. 1–5, 7)

DOE understands that NEMA MG1–1987 does not provide ratings for small motors of the identified higher horsepower ratings. However, DOE does not believe this precludes certain higher horsepower ratings built in a two-digit NEMA frame consistent with NEMA MG1–1987 from coverage. In addition, upon review of NEMA manufacturer product catalogs, DOE noted that two-digit frame size motors of higher horsepower ratings are commonly marketed as general purpose. DOE also observed from NEMA shipment data provided to DOE for the determination analysis that when NEMA surveyed its members and requested shipments of general purpose motors built in a two-digit frame number series, responding manufacturers provided shipments data in horsepower ratings exceeding those listed in the comments above. Although NEMA argued that these motors do not fall within this rulemaking, NEMA did not deny that these motors are considered general purpose motors. Thus, DOE believes that even though NEMA MG1–1987 does not provide standard ratings for higher horsepower small electric motors, many of these motors are considered NEMA general purpose motors that could be considered for coverage by DOE.

DOE notes that there is precedent for clarifying the scope of coverage of these motors. At industry's request during the test procedure rulemaking for small electric motors, DOE clarified the small electric motor definition to incorporate metric-equivalent motors that are built in accordance with the International Electrotechnical Commission's requirements. See Baldor, Public Meeting Transcript, No. 8 at p. 75; NEMA, No. 12 at p. 2. This expansion of the small electric motor definition, which was added to ensure that DOE provided adequate coverage over small electric motors generally, was incorporated into 10 CFR 431.442. See also 74 FR 32061–62 and 32072.

While DOE believes that many of the horsepower ratings recommended for exclusion by NEMA and Baldor could be included in the definition of small electric motors, upon examining manufacturer catalogs, DOE found that motors did not exist for some horsepower ratings/pole configuration combinations included in NOPR. Specifically, DOE found that no open construction, two-digit frame size motors have horsepower ratings greater than 3-horsepower. In addition, DOE found no small electric polyphase motors built with a 2- or 3-horsepower rating and a six-pole configuration. DOE also found that small electric single-phase motors (CSIR and CSCR) do not exist with a 1½-horsepower rating or higher for six-poles or a 3-horsepower rating for four-poles. As there is no evidence that these motors, if manufactured, would be considered general purpose motors, and because DOE lacks data on which to base energy conservation standards for these motors, DOE is not including them in the scope of this rulemaking. Today's final rule reflects this decision as no standards are being adopted in those product classes. Table IV.1 presents the horsepower ratings for which DOE believes no small electric motors are currently commercially available.

TABLE IV.1—HORSEPOWER RATINGS FOR WHICH NO MOTORS EXIST

| Motor category | Two-pole | Four-pole | Six-pole |
|---|---|---|---|
| Polyphase | | | ≥ 2 Hp. |
| Single-Phase | | ≥ 3 Hp | ≥ 1.5 Hp. |

c. Performance Requirements

NEMA defines several performance requirements, including breakdown torque, locked rotor torque, and locked rotor current that motors must meet in order to be considered general-purpose. Because DOE's assessment of the small electric motors market (through analysis of commercially-available products sold) indicates that the vast majority of motors meet the previously listed requirements, DOE believes that a motor must meet these performance characteristics as a condition for coverage.

PG&E commented that a loophole exists in the rulemaking since the current definition of a small general purpose motor is so narrow with respect to design and performance characteristics. (PG&E, Public Meeting Transcript, No. 20.4 at pp. 259–60) PG&E added that DOE's reliance on MG1–1987 provides another loophole where NEMA could update its standards such that manufacturers could still make a NEMA general purpose motor that is not covered under today's rulemaking. (PG&E, Public Meeting Transcript, No. 20.4 at pp. 260–61) NEEA/NPCC agreed with PG&E that a manufacturer could easily circumvent any standards whose coverage was based around NEMA performance requirements, by simply constructing the motor such that it slightly deviates from NEMA requirements, but still provides similar utility to the consumer. (NEEA/NPCC, No. 27, pp. 2–3) Baldor

stated that the tables of performance requirements in NEMA MG1 are designed to let customers know how motors will perform from manufacturer to manufacturer and they have been established for many years and there would be no reason to change them. (Baldor, Public Meeting Transcript, No. 20.4 at pp. 266–67)

DOE understands the concerns expressed by PG&E, but agrees with Baldor that considering that the relevant performance requirements in NEMA MG1 have not changed substantially in over 20 years, these performance standards are unlikely to change should NEMA develop a new version of MG1. DOE believes that to do so would constitute a major change to the industry and performance characteristics that customers have been accustomed to over the years. Therefore, DOE believes that small electric motors must meet certain requirements in NEMA MG1–1987 shown in Table IV.6. For those combinations of horsepower rating and pole configuration that do not have performance requirements for two-digit frame sizes, DOE has no performance requirements. Instead, DOE will cover only those motors widely considered general purpose and marketed as such in manufacturer catalogs.

d. Motor Enclosures

In the NOPR, DOE stated that in ascertaining what constitutes a small electric motor, only the 1987 version of MG1 applies within the context of the statutory definition. Under that interpretation, DOE stated that only open construction motors were considered covered products. DOE is continuing to adhere to this approach.

As DOE's proposed scope did not extend beyond open motors as covered products, Baldor and NEMA commented that the revision to 10 CFR Part 431 proposed in the NOPR should clearly mention that the table of efficiency values for section 431.446 applies only to open motors. (Baldor, Public Meeting Transcript, No. 20.4 at pp. 47–48, NEMA, No. 24 at p. 5) To clarify the application of the new efficiency values, DOE is modifying the efficiency standards tables in section 431.446 from today's final rule to include the words, "open motors" in the headings.

e. Frame Sizes

As for the frame sizes of motors that are covered by DOE standards for small electric motors, EPCA defines a small electric motor, in relevant part, as a motor "built in a two-digit frame number series in accordance with NEMA Standards Publication MG1–1987." (42 U.S.C. 6311(13)(G)) MG1–1987 establishes a system for designating motor frames that consisting of a series of numbers in combination with letters that correspond to a specific size. The 1987 version of MG1 designates three two-digit frame series: 42, 48, and 56. These frame series have standard dimensions and tolerances necessary for mounting and interchangeability that are specified in sections MG1–11.31 and MG1–11.34.

DOE understands that manufacturers produce motors in other two-digit frame sizes, namely a 66 frame size. The 66 frame size is used for definite-purpose or special-purpose motors and not used in general-purpose applications and are not covered under the EPCA definition of "small electric motor." In the NOPR, DOE stated that it was unaware of any other motors with two-digit frame sizes that are built in accordance with NEMA MG1–1987. Should such frame sizes appear on the market, DOE will consider evaluating whether to include that equipment. For the NOPR, DOE received no comments regarding this issue and as a result, is maintaining its stance on this topic for this final rule.

f. Insulation Class Systems

Because DOE's interpretation of the statutory definition of a small electric motor is largely influenced by what NEMA defines as a general-purpose alternating-current motor under MG1–1987, DOE has taken into account the criteria that comprise a general purpose motor. Among these criteria are the applicable insulation classes. NEMA MG1–1987 paragraph 1–1.05, provides that a general-purpose motor must incorporate a "Class A insulation system with a temperature rise as specified in MG 1–12.42 for small motors or Class B insulation system with a temperature rise as specified in MG 1–12.43 for medium motors."

In NEMA MG1–1987, paragraphs 1.66 and 12.42.1 define four insulation class systems: Class A, Class B, Class F, and Class H. They are divided into classes based on the thermal endurance and each system has a different temperature rise [5] that the insulating material must be able to withstand without degradation. The temperature rise requirement for Class A systems is the lowest of the four systems defined in NEMA MG1–1987, which means that all other insulation classes meet Class A requirements. Because all insulation class systems meet the Class A requirements, DOE proposed to cover motors that incorporate any of the other insulation class systems in the NOPR. A joint comment submitted by Pacific Gas and Electric Company (PG&E), Southern California Edison (SCE), Southern California Gas Company (SCGC), and San Diego Gas and Electric Company (SDGE) supported DOE's decision to include insulation Classes B, F, and H in addition to Class A. (Joint Comment, No. 23 at p. 2) NEMA and Baldor commented that although it is prudent to cover insulation class systems other than Class A, in order for a motor to be considered covered it must adhere to the temperature rise limits required of Class A motors by NEMA MG1. For example, if a motor contains a Class B insulation system, but the temperature rise exceeds the threshold for Class A insulation systems, the commenters stated that that motor should be excluded from coverage. (Baldor, Public Meeting Transcript, No. 20.4 at pp. 25–26; Baldor, No. 15 at p. 3–4, NEMA, No. 24 at pp. 5–7)

DOE disagrees with Baldor and NEMA's assessment regarding temperature rise and in today's final rule maintains that the scope of coverage includes motors with any insulation class system Class A or higher, regardless of whether a motor meets the Class A temperature rise requirements. First, DOE notes that NEMA MG1 does not require small motors to meet the temperature rise for a Class A insulation system. Rather, it only requires that the motor incorporates an insulation system that meets Class A requirements, which DOE has determined could be Class A, B, F, or H.

Second, DOE believes that it is unreasonable to apply a more stringent temperature rise requirement on motors with higher insulation class systems. These motors often incorporate the higher insulation class systems in order to protect the motors from degradation at high temperatures. As a result, the accompanying temperature rise, which serves as a marker of how much heat a particular insulation class can withstand to prevent the motor from damage, will generally increase as a higher grade of insulation is used. Baldor's suggestion that a lower temperature rise (70 °C) must be used for each higher grade of insulation that offers protection at higher temperatures is one that DOE declines to adopt.

Furthermore, according to NEMA Standards publication MG1–1987, paragraph 10.39.1, although insulation class system designation is a required

[5] Temperature rise refers to the increase in temperature over the ambient temperature of the motor when operated at service factor load. NEMA MG1 provides maximum temperature rises (as measured on the windings of the motor) for each insulation class system.

marking on the nameplate of small electric motors, temperature rise is not. If DOE were to limit scope based on the temperature rise requirements of Class A systems, DOE would have no way of determining whether motors of insulation class systems greater than Class A meet the required temperature rise and are therefore subject to energy conservation standards. As only 2 percent of small electric motor models sold are labeled with Class A insulation systems, 98 percent of small electric models would have unknown temperature rises (relative to Class A requirements). DOE believes that including all insulation classes and temperature rises satisfies the statutory definition and avoids creating an unenforceable standard for a large number of motors that do not list temperature rise.

g. Service Factors

Some CSIR, CSCR, and polyphase motors may fail to meet the NEMA definition of general purpose alternating current motor because they do not meet NEMA service factor requirements. See, *e.g.* NEMA MG1–1987 Table 12–2. Service factor is a measure of the overload capacity at which a motor can operate without thermal damage, while operating normally within the correct voltage tolerances. The rated horsepower multiplied by the service factor determines that overload capacity. For example, a 1-horsepower motor with a 1.25 service factor can operate at 1.25 horsepower (1-horsepower × 1.25 service factor). For the NOPR, DOE concluded that motors that fail to meet service factor requirements in MG1–12.47 of MG1–1987 (now 12.51.1 of MG1–2006) are not "small electric motors" as EPCA uses that term. Receiving no comments to the contrary, DOE maintains that position in today's final rule and energy efficiency standards do not apply to them.

h. Metric Equivalents and Non-Standard Horsepower and Kilowatt Ratings

DOE's interpretation of a small electric motor is largely based on the construction and rating system in NEMA MG1–1987. (42 U.S.C. 6311(13)(G)) This system uses English units of measurement and power output ratings in horsepower. In contrast, general-purpose electric motors manufactured outside the United States and Canada are defined and described with reference to the International Electrotechnical Commission (IEC) Standard 60034–1 series, "Rotating electrical machines," which employs terminology and criteria different from those in EPCA. The performance attributes of these IEC motors are rated pursuant to IEC Standard 60034–1 Part 1: "Rating and performance," which uses metric units of measurement and construction standards different from MG1, and a rating system based on power output in kilowatts instead of power output in horsepower. The Institute of Electrical and Electronics Engineers (IEEE) Standard 112 recognizes this difference in the market and defines the relationship between horsepower and kilowatts. Furthermore, in 10 CFR 431.12, DOE defined "electric motor" in terms of both NEMA and IEC equivalents even though EPCA's corresponding definition and standards were articulated in terms of MG1 criteria and English units of measurement. 64 FR 54114 (October 5, 1999) The test procedure final rule adopted a definition for small electric motor that explicitly indicated that IEC equivalent motors are considered small electric motors. 10 CFR 431.442. 74 FR 32062, 72.

In the NOPR, DOE addressed how IEC metric or kilowatt-equivalent motors can perform identical functions as NEMA small electric motors and provide comparable rotational mechanical power to the same machines or equipment. Moreover, IEC metric or kilowatt-equivalent motors can generally be interchangeable with covered small electric motors. Consistent with the codified definition of "small electric motor in 10 CFR 431.442, DOE interpreted EPCA to apply the term "small electric motor" to any motor that is identical or equivalent to a motor constructed and rated in accordance with NEMA MG1, which includes IEC metric motors. DOE also proposed that motors with non-standard kilowatt and horsepower ratings would be required to meet small electric motor energy conservation standards. 74 FR 61422.

A joint comment submitted by PG&E, SCE, SCGC, and SDGE indicated support for DOE's decision to include IEC-rated motors in today's rulemaking. (Joint Comment, No. 23 at p. 2) NEMA and Baldor commented that, even though they agreed with DOE's approach in the NOPR, they believed that given the statutory definition's dependence on MG1–1987 (and the ratings contained in that standard) more justification is needed to include non-standard metric or English-rated motors in its scope of coverage. (Public Meeting Transcript, No. 20.4 at pp. 288–89; NEMA, No. 24 at pp. 24–25)

DOE appreciates these comments and in this final rule maintains its position regarding the inclusion of non-standard IEC metric and English-rated motors. Though NEMA MG1 does not provide ratings for these non-standard motors, DOE recognizes that they can perform identical functions as those NEMA motors with standard horsepower ratings. Therefore, as DOE did within the context of its codified definition of the term "small electric motor" found in 10 CFR 431.442 to include IEC metric-equivalent motors, DOE believes that non-standard horsepower and kilowatt rated motors should be considered NEMA general purpose and included in the scope of coverage of this rulemaking.

i. Summary

During the public meeting, Baldor and NEMA commented that DOE did not include the definition of NEMA general purpose motor in 10 CFR 431.442, and suggested that DOE include the definition for clarity and completeness. (Baldor, Public Meeting Transcript, No. 20.4 at p. 46; NEMA, No. 24 at p. 5) A.O. Smith also requested clarification of the term "small electric motor," and suggested that the definition align with NEMA established guidelines. (A.O. Smith, No. 26 at p. 2)

DOE has discussed the covered motor categories, horsepower ratings, motor enclosures, frame sizes, insulation class systems, service factors, and metric equivalents. As discussed in section IV.A.1.b, because DOE has found several horsepower/pole configurations for which small electric motors are not commercially available, DOE has made slight modifications in the range of horsepower ratings for which it is adopting standards in this final rule. The motors covered by today's rule include polyphase motors from ¼- to 3-horsepower for motors equipped with two poles, ¼- to 3-horsepower for motors with four poles, and ¼- to ½-horsepower for motors with six pole motors as long as they are built in a two-digit frame number series and with an open construction; the CSIR and CSCR motors covered by today's rule include motors from ¼- to 3-horsepower motors equipped with two poles, ¼- to 2-horsepower for motors with four poles, and ¼- to 1-horesepower for motors with six poles as long as they are built in a two-digit frame number series and with an open construction. A motor will not be excluded because of its insulation class system or its temperature rise. However, it will be excluded if it fails to meet NEMA general purpose service factor requirements. Any metric-equivalent motor or motor with a non-standard horsepower or kilowatt rating that has performance characteristics and construction equivalent to those listed

above is also a covered product and must meet the energy efficiency standards of this rulemaking. Although today's final rule DOE does not codify a definition for "NEMA general purpose motor", DOE will consider proposing a definition for this term in the electric motor test procedure supplemental NOPR.

2. Product Classes

When evaluating and establishing energy conservation standards, DOE generally divides covered equipment into classes by the type of energy used, capacity, or other performance-related features that affect efficiency. (42 U.S.C. 6295(q)) DOE routinely establishes different energy conservation standards for different product classes based on these criteria.

At the NOPR public meeting, DOE presented its rationale for creating 72 product classes. The 72 product classes were based on combinations of three different characteristics: motor category, number of poles, and horsepower. As these motor characteristics change, so does the utility and efficiency of the small electric motor.

The motor category divides the small electric motors market into three major groups: CSIR, CSCR, and polyphase. For each motor category, DOE divided the product classes by all combinations of eight different horsepower ratings (*i.e.,* ¼ to ≥ 3) and three different pole configurations (*i.e.,* 2, 4, and 6). A change in motor category can constitute a change in the type of power used, three-phase power for polyphase motors versus single-phase power for capacitor-start motors. Alternatively, it might be a change in consumer utility that affects efficiency. The addition of a run-capacitor on a CSCR motors can make the motor more efficient as well as constitute dimensional changes as the run-capacitor is usually mounted externally on the housing. Horsepower rating is directly related to a motor's capacity, and its pole configuration is directly related to the theoretical maximum speed at which a motor can operate. For the NOPR, DOE received no comments contrary to disaggregating product classes with these characteristics, but did receive other comments regarding product classes.

Consistent with their comments on scope (discussed in section IV.A.1), NEMA and Baldor stated that certain combinations of horsepower and speed (or pole-configuration) ratings should be excluded from DOE's product classes because, in their view, they are not small electric motors within the context of MG1–1987. Specifically, they stated that motors with horsepower ratings greater than 1-horsepower for two-pole motors, greater than ¾-horsepower for four-pole motors, and greater than ½-horsepower for six-pole motors do not meet the statutory definition. (Baldor, Public Meeting Transcript, No. 20.4 at pp. 39–41; NEMA, No. 24 at pp. 3–4) As discussed in section IV.A.1, DOE examined the statutory definition of small electric motor and disagrees that the aforementioned horsepower and speed ratings are not covered under this rulemaking. Therefore, in this final rule DOE is maintaining coverage of combinations of horsepower and pole configurations higher than those recommended by NEMA and Baldor. However, as discussed in section IV.A.1.b, DOE is not adopting standards for motors which are not currently commercially available. Accordingly, DOE has removed these proposed product classes in the final rule, resulting in 62 total product classes.

NEMA and Baldor also commented that DOE should include frame size among the characteristics that define a product class. They stated that smaller frame size motors will not be able to achieve as high an energy efficiency rating as the larger frame sized motors, thus warranting separate product classes. (Baldor, Public Meeting Transcript, No. 20.4 at pp. 43–44, NEMA, No. 24 at pp. 4–5, 23)

DOE acknowledges that motors built with smaller dimensions, namely core diameters, may not be able to achieve the same efficiency as a motor with larger dimensions. The smaller diameter limits the amount of active material that is used to reduce motor losses and therefore limits the maximum efficiency rating possible as well. However, frame size, which relates to the frame housing and not the core diameter, is a measurement of height from the bottom of the mounting feet to the center of the shaft of the motor. Frame size does not always correlate to the core diameter of the motor and amount active material. For example, DOE found that some motors with larger frame sizes have core diameters equivalent to those motors built in smaller frame sizes, which means that these motors have an efficiency potential equivalent to that of a motor in a smaller frame size. Consequently, frame size alone does not necessarily change the efficiency of a small electric motor.

Additionally, NEMA MG1 does not differentiate breakdown torque, locked-rotor torque, and locked-rotor current requirements for small general-purpose motors by frame size. DOE believes that if performance requirements other than efficiency for small motors are not different for different frame sizes, there is no need or precedent for DOE to differentiate efficiency standards for small electric motors based on frame size.

However, as stated earlier, DOE recognizes that core diameter affects efficiency. If DOE were to set a standard based on an analysis of a motor of larger core diameter, it could potentially be eliminating from market smaller core diameter motors. However, because core diameter is not a standardized dimension across all small electric motors, DOE has chosen to address this issue in the engineering analysis. As discussed in section IV.C DOE based its representative unit and scaling analyses on what it perceived as the greatest dimensionally constrained motors on the market for each product class. By doing this, DOE ensures that all existing consumer utility in the marketplace of smaller core diameter motors is maintained with energy conservation standards.

Chapter 3 of the TSD accompanying today's notice provides additional detail on the product classes defined for the standards proposed in this final rule, and Table IV.2 through Table IV.4 below enumerate these product classes. For the final rule, DOE considers 62 product classes.

TABLE IV.2—PRODUCT CLASSES FOR POLYPHASE MOTORS WITH AN OPEN CONSTRUCTION

| Motor horsepower/standard kilowatt equivalent | Six poles | Four poles | Two poles |
|---|---|---|---|
| ¼ hp/0.18 kW | PC #1 | PC #2 | PC #3. |
| ⅓ hp/0.25 kW | PC #4 | PC #5 | PC #6. |
| ½ hp/0.37 kW | PC #7 | PC #8 | PC #9. |
| ¾ hp/0.55 kW | PC #10 | PC #11 | PC #12. |
| 1 hp/0.75 kW | PC #13 | PC #14 | PC #15. |
| 1½ hp/1.1 kW | PC #16 | PC #17 | PC #18. |
| 2 hp/1.5 kW | | PC #19 | PC #20. |

TABLE IV.2—PRODUCT CLASSES FOR POLYPHASE MOTORS WITH AN OPEN CONSTRUCTION—Continued

| Motor horsepower/standard kilowatt equivalent | Six poles | Four poles | Two poles |
|---|---|---|---|
| 3 hp/2.2 kW | | PC #21 | PC #22. |

TABLE IV.3—PRODUCT CLASSES FOR CAPACITOR-START INDUCTION-RUN MOTORS WITH AN OPEN CONSTRUCTION

| Motor horsepower/standard kilowatt equivalent | Six poles | Four poles | Two poles |
|---|---|---|---|
| ¼ hp/0.18 kW | PC #23 | PC #24 | PC #25. |
| ⅓ hp/0.25 kW | PC #26 | PC #27 | PC #28. |
| ½ hp/0.37 kW | PC #29 | PC #30 | PC #31. |
| ¾ hp/0.55 kW | PC #32 | PC #33 | PC #34. |
| 1 hp/0.75 kW | PC #35 | PC #36 | PC #37. |
| 1½ hp/1.1 kW | | PC #38 | PC #39. |
| 2 hp/1.5 kW | | PC #40 | PC #41. |
| 3 hp/2.2 kW | | | PC #42. |

TABLE IV.4—PRODUCT CLASSES FOR CAPACITOR-START CAPACITOR-RUN MOTORS WITH AN OPEN CONSTRUCTION

| Motor horsepower/standard kilowatt equivalent | Six poles | Four poles | Two poles |
|---|---|---|---|
| ¼ hp/0.18 kW | PC #43 | PC #44 | PC #45. |
| ⅓ hp/0.25 kW | PC #46 | PC #47 | PC #48. |
| ½ hp/0.37 kW | PC #49 | PC #50 | PC #51. |
| ¾ hp/0.55 kW | PC #52 | PC #53 | PC #54. |
| 1 hp/0.75 kW | PC #55 | PC #56 | PC #57. |
| 1½ hp/1.1 kW | | PC #58 | PC #59. |
| 2 hp/1.5 kW | | PC #60 | PC #61. |
| 3 hp/2.2 kW | | | PC #62. |

*B. Screening Analysis*

The purpose of the screening analysis is to evaluate the technology options identified as having the potential to improve the efficiency of equipment, to determine which technologies to consider further and which to screen out. DOE consulted with industry, technical experts, and other interested parties to develop a list of technologies for consideration. DOE then applied the following four screening criteria to determine which design options are suitable for further consideration in a standards rulemaking:

1. *Technological feasibility.* DOE considers technologies incorporated in commercial products or in working prototypes to be technologically feasible.

2. *Practicability to manufacture, install, and service.* If mass production and reliable installation and servicing of a technology in commercial products could be achieved on the scale necessary to serve the relevant market at the time the standard comes into effect, then DOE considers that technology practicable to manufacture, install, and service.

3. *Adverse impacts on product utility or product availability.* If DOE determines a technology would have a significant adverse impact on the utility of the product to significant subgroups of consumers, or would result in the unavailability of any covered product type with performance characteristics (including reliability), features, sizes, capacities, and volumes that are substantially the same as products generally available in the United States at the time, it will not consider this technology further.

4. *Adverse impacts on health or safety.* If DOE determines that a technology will have significant adverse impacts on health or safety, it will not consider this technology further.

See 10 CFR part 430, subpart C, appendix A, (4)(a)(4) and (5)(b).

DOE identified the following technology options that could improve the efficiency of small electric motors: Utilizing a copper die-cast rotor, reducing skew on the rotor stack (*i.e.* straightening the rotor conductor bars), increasing the cross-sectional area of rotor conductor bars, increasing the end ring size, changing the copper wire gauge used in the stator, manipulating the stator slot size, changing capacitor ratings, decreasing the air gap between the rotor and stator, improving the grades of electrical steel, using thinner steel laminations, annealing steel laminations, adding stack length, using high efficiency steel lamination materials, using plastic bonded iron powder (PBIP), installing better ball bearings and lubricant, and installing a more efficient cooling system. For a description of how each of these technology options improves small electric motor efficiency see TSD chapter 3. For the NOPR, DOE screened out two of these technology options: PBIP and decreasing the air gap below .0125 inch. DOE received no comments regarding these two technology options and therefore maintains its exclusion of these technology options in today's final rule. However, DOE did receive comments concerning the availability of premium electrical steels (such as Hiperco) and copper rotors, two design options that it did not screen out in the NOPR. Please see section IV.I for a discussion of those issues.

DOE believes that all of the efficiency levels discussed in today's notice are technologically feasible. The technologies that DOE examined have been used (or are being used) in commercially available equipment or working prototypes. These technologies all incorporate materials and components that are commercially available in today's supply markets for the motors that are the subject of this final rule.

*C. Engineering Analysis*

The engineering analysis develops cost-efficiency relationships to show the manufacturing costs of achieving increased energy efficiency. As discussed in the NOPR, to conduct the

engineering analysis, DOE used a combined design-option and efficiency level approach in which it employed a motor design software technical expert to develop motor designs at several efficiency levels for each analyzed product class. Based on these simulated designs and manufacturer and component supplier data, DOE calculated manufacturing costs and selling prices associated with each efficiency level. DOE decided on this approach after receiving insufficient response to its request for the manufacturer data needed to execute an efficiency-level approach for the preliminary analyses. The design-option approach allowed DOE to make its engineering analysis methodologies, assumptions, and results publicly available in the NOPR, thereby permitting all interested parties the opportunity to review and comment on this information. The design options considered in the engineering analysis include: Copper die-cast rotor, reduced skew on the rotor stack, increased cross-sectional area of rotor conductor bars, increase end-ring size, changing the gauge of copper wire in the stator, manipulating stator slot size, decreased air gap between rotor and stator to .0125 inch, improved grades of electrical steel, use thinner steel laminations, annealed steel laminations, increased stack height, modified capacitors ratings, improved ball bearings and lubricant, and more efficient cooling systems. Chapter 5 of the TSD contains a detailed description of the engineering analysis methodology and chapter 3 of the TSD contains a detailed description of how the design options listed above increase motor efficiency.

1. Product Classes Analyzed

As discussed in section IV.A.2 of this notice, DOE is establishing a total of 62 product classes for small electric motors, based on the motor category (polyphase, CSIR, or CSCR), horsepower rating, and pole configuration. DOE carefully selected certain product classes to analyze, and then scaled its analytical findings for those representative product classes to other product classes that were not directly analyzed. Further discussion of DOE's scaling methodology is presented in section IV.C.5

For the NOPR, DOE analyzed three representative product classes: (1) 1-horsepower, four-pole, polyphase motor, (2) ½-horsepower, four-pole, CSIR motors, and (3) ¾-horsepower, four-pole, CSCR motor. By choosing these three product classes, DOE ensured that each motor category (polyphase, CSIR, and CSCR) was represented. DOE achieved this by selecting horsepower ratings for each motor category that are commonly available from most manufacturers, thus increasing the quantity of available data on which to base the analysis. Finally, DOE chose four-pole motors for each motor category, consistent with NEMA-provided shipments data (see TSD chapter 9), which indicated that these motors had the highest shipment volume in 2007. See TSD chapter 5 for additional detail on the product classes analyzed.

In response to the NOPR, Baldor and NEMA commented that the product class selected for polyphase motors was inappropriate. They asserted that according to NEMA's standard ratings in MG1–1987, a 1-horsepower, four-pole, polyphase motor would not be considered a small motor or NEMA general purpose small motor, and therefore falls out of the scope of this rulemaking. (Baldor, Public Meeting Transcript, No. 20.4 at pp. 62–63; NEMA, No. 24 at p. 7) However, as discussed in section IV.A.1, DOE disagrees with Baldor and NEMA's interpretation of scope, and in this final rule, DOE is including small electric motors with horsepower ratings ranging from ¼- to 3-horsepower and pole configurations of two, four, and six poles. In consideration of this scope, DOE believes that the representative product classes selected in the NOPR engineering analysis are appropriate and is continuing to use these same representative product classes in today's final rule.

2. Baseline Models

The engineering analysis DOE conducted calculates the incremental costs for equipment with efficiency levels above the baseline in each product class analyzed. For the NOPR analysis, DOE established the baseline motor efficiency and design for the three representative product classes by purchasing what it believed to be the lowest efficiency motors on the market for each of these classes. To select these baseline motors, DOE interviewed manufacturers and used catalog data on motor efficiency and physical dimensions. DOE recognizes that motors with smaller core diameters, may be unable to achieve efficiencies as high as those with larger core diameters. In order to preserve the availability of these smaller core diameter motors, DOE selected baselines which it believed represented the most dimensionally constrained, in terms of core diameter, and least efficient motors currently available on the market.

After purchasing the three baseline small electric motors, DOE tested the motors according to the appropriate IEEE test procedures (as dictated by DOE's small electric motor test procedure discussed in section III.A). After performing the appropriate test procedures, DOE then tore down each baseline motor to obtain internal dimensions, copper wire gauges, steel grade, and any other pertinent design information. Those parameters and tests were then used as inputs into the design software, allowing DOE to model the motor and calibrate its software to the tested efficiencies. All subsequent higher-efficiency motor designs employed the design options discussed earlier to model incremental improvements in efficiency and increases in cost over the baseline.

a. Baseline Efficiencies

At the NOPR public meeting, DOE received several comments regarding the validity of the baseline motor efficiencies used in the engineering analysis. Emerson Motor Company pointed out that it is common to see a spread in efficiencies within a population of motors of a particular design. Emerson questioned if an analysis was conducted to determine if the baseline polyphase motor chosen and tested had an efficiency value that was at the high-end, low-end, or near the average compared to the population of motors of that model type. (Emerson, Public Meeting Transcript, No. 20.4 at pp. 73–75) Similarly, Baldor and NEMA noted that the baseline polyphase motor's tested efficiency (77 percent) varied significantly from the catalog efficiency (74 percent). They commented that using 77 percent as the efficiency of the baseline motor in the engineering analysis assumed that a single tested value of efficiency is equal to the true arithmetic mean of the full-load efficiencies of the population of motors. They argued that given the distribution of efficiencies commonly seen across a population of motors, due in part to factors such as manufacturing variability, this would be an inappropriate assumption. In addition, they also cited the electric motor compliance provisions (in 10 CFR 431.17) for support. These provisions state that the lowest full-load efficiency in a sample can differ from the nominal full load efficiency by as much as 15 percent due to variations in losses attributable to variability in manufacturing and testing facilities. Baldor and NEMA asserted that similar conditions should be expected for small motors. Baldor and NEMA recommended that absent any other

data, DOE should use the manufacturer-rated catalog efficiency of the polyphase motor (74 percent) as the baseline efficiency. (Baldor, Public Meeting Transcript, No. 20.4 at pp. 120–121, 125; NEMA, No. 24 at p. 11, 13)

DOE agrees that it is possible that one tested efficiency value does not represent the average efficiency over a population of motors. Inconsistencies in motor laminations and processing during manufacturing can result in motors of a single design having a distribution of efficiencies, most commonly seen as variability in core and stray load losses. However, as manufacturers were not required to report its catalog efficiencies for these motors based on the results of the DOE test procedures, DOE does not agree with NEMA's assertion that catalog efficiencies should be used as the baseline efficiencies.

In consideration of the comments received, DOE conducted additional testing to validate the polyphase baseline efficiency. DOE tested five additional polyphase motors (for a total of six tests, exceeding the minimum five required by the DOE sampling requirements for electric motors in 10 CFR 431.17) of the same baseline model, purchased from five separate warehouses in order to ensure the maximum variability in production. DOE then used the average of the six tests as the baseline efficiency for the polyphase motor. For the single-phase baseline motors, because the tested values did not deviate significantly from the catalog efficiency values and as DOE did not receive specific comments opposing these values, DOE used the single-tested efficiency values as the baseline efficiencies.

Because DOE modified the efficiencies of the baseline designs relative to that which was calculated in the motor design software, DOE felt it necessary to evaluate whether the efficiencies of the higher efficiency designs modeled in the software would also change. As stated earlier, DOE calibrated its software model to the NOPR tested efficiencies of the baseline models, and all subsequent higher efficiency motor designs were generated as incremental efficiency gains and cost increases over this baseline design. Thus, a change in the baseline efficiency would likely affect the efficiencies of the other motor designs. Therefore, for this final rule, DOE shifted the baseline modeled efficiencies to match the tested values described above. Similarly, subsequent, more efficient designs were shifted by the same percentage change in losses as the baseline shifts. For example, the baseline polyphase model in the design software predicted an efficiency of 77.7 percent. This value was decreased to the average tested efficiency value of 75.3 percent, constituting an increase in motor losses of roughly 14 percent. The modeled efficiencies of the more efficient designs were then shifted down in efficiency by a 14 percent increase in motor losses as well.

TABLE IV.5—EFFICIENCY VALUES OF BASELINE MODELS

| | Polyphase 1 hp, 4 pole | CSIR ½ hp, 4 pole | CSCR ¾ hp, 4 pole |
|---|---|---|---|
| Catalog Rated Efficiency (%) | 74.0 | 59.0 | 72.0 |
| Software Modeled Efficiency (%) | 77.7 | 57.9 | 70.7 |
| Baseline/Tested Efficiency (%) | [6] 75.3 | [7] 57.9 | [7] 71.4 |
| Shift in Losses from Modeled Values (%) | 14 | 0 | −3 |

In the NOPR, DOE stated that an accredited laboratory performed IEEE Standard 112 Test Methods A and B and IEEE Standard 114 to find efficiency data for its baseline models. However, at the public meeting on December 17, 2009, Baldor commented that according to NEMA and the National Voluntary Laboratory Accreditation Program Handbook 150–10, accreditation is based on motor testing in accordance with IEEE Standard 112 Test Method B only, and that it does not currently cover testing in accordance with IEEE Standard 112 Method A or IEEE Standard 114. (Baldor, Public Meeting Transcript, No. 20.4 at pp. 114–115) Therefore, Baldor suggested that DOE's statement about motor tests was misleading because no accreditation exists for two of the three listed methods. DOE clarifies its previous statement to say that a laboratory accredited to perform IEEE Standard 112 Test Method B performed the tests.

b. Baseline Temperature Rise

NEMA MG1 defines several temperature rise requirements for general purpose alternating current single-speed induction motors. In the NOPR TSD, DOE reported the modeled temperature rise characteristics of the baseline motors selected in the engineering analysis. In response to those values, Baldor reasoned that because the reported temperature rises (78 °C for the polyphase motor and 86 °C for the CSIR motor at full load) would far exceed the NEMA temperature rise limit of 70 °C at service factor load, for a Class A motor, the selected baseline motors were inappropriate selections. (Baldor, Public Meeting Transcript, No. 20.4 at pp. 27–30) After receiving Baldor's comments, DOE reviewed the data from thermal tests conducted on the purchased baseline motors and found that the winding temperature tests indicated that all three baseline motors in fact meet NEMA temperature rise requirements for Class A insulation systems. See chapter 5 of the TSD for the tested temperature rise data for each baseline motor. However, because the modeled temperature rises in the design software were inconsistent with these tests, DOE revised the operating temperature inputs to the design software to agree with the tested temperature rise data. This change in operating temperature results in slight changes in the baseline modeled efficiencies. Namely as operating temperature decreases, motor efficiency generally increases. Though these motors meet temperature rise requirements for Class A insulation systems, DOE emphasizes again, that its scope of coverage is not bound to those motors with temperature rises of less than Class A requirements, but rather motors that contain insulation class systems rated A or higher.

c. Baseline Motor Performance

In the NOPR TSD, DOE presented the modeled performance characteristics for the baseline motors selected. Baldor and NEMA both commented that none of the baseline motors meet all of the general purpose performance characteristics for locked-rotor torque, locked-rotor

[6] This efficiency represents the average of tests conducted on six separate units of the same model number.

[7] These values were incorrectly presented in the NOPR as 57.7 and 71.0 for CSIR and CSCR, respectively. These values presented in the NOPR represent the NOPR modeled efficiencies. 74 FR 61427.

current, and breakdown torque as defined in NEMA MG1–1987. They argued that these motors cannot be considered small electric motors (under the statutory definition) and therefore, should have never been chosen as baseline motors. For polyphase motors, they cited comparisons to performance characteristics in NEMA MG1–1987 intended for "medium" motors. (Baldor, Public Meeting Transcript, No. 20.4 at pp. 64–67; NEMA, No. 24 at pp. 7–8) The NEEA/NPCC disagreed and stated that because the performance of the motors selected by DOE were representative of products on the market, they were appropriate baseline models. (NEEA/NPCC, No. 27 at pp. 8–9)

DOE examined the performance characteristics of the three baseline motors, and determined that they meet all small electric motor performance requirements of NEMA MG1. Thus, DOE believes that they are appropriate baseline motors and are representative of covered small electric motors on the market. Table IV.6 below presents references to NEMA MG1–1987 sections containing performance characteristics that DOE believes are relevant to single-phase and polyphase small electric motors.

TABLE IV.6—NEMA MG1–1987 PERFORMANCE REQUIREMENTS RELEVANT TO GENERAL PURPOSE SMALL MOTORS

| | Single phase | Polyphase |
|---|---|---|
| Breakdown Torque | 12.32.1 | 12.37. |
| Locked Rotor Current | 12.33.2 | None.* |
| Locked Rotor Torque | 12.32.2 | None. |

* Because NEMA MG1–1987 section 12.35 is labeled as applying to only medium motors, DOE does not believe there are polyphase locked rotor current requirements for small motors. However, NEMA commented at the preliminary analysis stage that it is common industry practice to use the limits for Design B medium motors for small motors. (NEMA. No. 13, p. 6).

DOE notes that in the NOPR TSD, DOE presented these performance characteristics at full load, steady state operating temperature. When extrapolated down to an ambient temperature of 25° C, the temperature at which NEMA specifies that breakdown torque requirements must be met, all baseline motors meet the necessary small motor performance requirements in MG1. A direct comparison of those values, as requested by Baldor (Baldor, No. 25 at p. 2; Baldor, Public Meeting Transcript, No. 20.4 at p. 66) is available in TSD chapter 5.

3. Higher Efficiency Motor Designs

After establishing baseline models, DOE next used the motor design software to incorporate design options (generated in the market and technology assessment and screening analysis) to increase motor efficiency. In response to the NOPR engineering analysis, DOE received several comments that addressed issues regarding the application of the design options in the engineering analysis and the validity of the results outputted from the design software.

In general, manufacturers questioned whether DOE adequately verified that its design software accurately predicts motor efficiency. NEMA and Baldor stated that DOE seemingly used an AEDM to generate motor designs and scaled efficiencies for other product classes without meeting DOE's own substantiation requirements of an AEDM. Emerson stated that in order for manufacturers to use an AEDM for compliance and certification with energy conservation standards, DOE requires that the AEDM must be applied to 5 basic models of small electric motors, and it be shown to accurately predict motor efficiency under real-world testing. Collectively, this constitutes a total of 25 tests manufacturers must complete in order to verify their design software. (Emerson, Public Meeting Transcript, No. 20.4 at p. 105) Baldor and NEMA contended that DOE must be held to these same verification standards if it uses an AEDM in establishing energy conservation standards. (Baldor, Public Meeting Transcript, No. 20.4 at pp. 118–24, 145–146; NEMA, No. 24 at p. 11–12)

NEEA/NPCC disagreed with these comments, stating that requirements of certification and compliance with Federal efficiency regulations are wholly unrelated and inapplicable to DOE's analysis methodology. The motor design software used in the engineering analysis was simply being used to create motor models for analysis, not as an alternative compliance tool. Thus, DOE is under no obligation to meet the verification standards of an AEDM. NEEA/NPCC stated that based on the description of the design software, the technical qualifications of the consultants, and the motor testing and teardowns conducted to verify the accuracy of software tools, it has satisfied with DOE's engineering analysis methodology. (NEEA/NPCC, No. 27 at pp 6–7).

DOE agrees with NEEA/NPCC that substantiation of an AEDM is a concept intended for certifying compliance with energy efficiency standards. It is a tool for manufacturers to use to help ensure that equipment they manufacture comply with the standards that DOE sets. It is not a tool for assessing whether a particular energy efficiency level under consideration by DOE satisfies the EPCA criteria. Accordingly, the use of the AEDM in the manner suggested by industry would not be relevant for the purposes of this engineering analysis, which is geared toward DOE's standards rulemaking.

Moreover, on the bases of the baseline motor efficiency verification process which included physical teardowns for numerous small motors, DOE has confidence in the software program it has selected and believes it to be appropriate to analyze efficiency levels for small electric motors.[8] Though the supporting data for these tests are based on confidential manufacturer data, the performances of these motors verify the software predictions.

In addition, as discussed in the NOPR, to the extent that it was feasible, DOE substantiated the resulting cost-efficiency curves by testing and tearing down higher efficiency motors. In response to that NOPR discussion, NEMA asserted that as seen in Table 12.1 and Table 12.2 in appendix 5A of the NOPR, DOE did not compare the test results to the calculated results for the representative product classes. (NEMA, No. 24 at p. 24) DOE wishes to clarify that Table 12.1 and Table 12.2 in appendix 5A of the NOPR TSD contained test results for motors that were used as part of DOE's scaling methodology. The results of the cost-efficiency curve validation testing for representative product classes are shown in Figure 4.1 through Figure 4.3 of appendix 5A of the NOPR and final rule TSDs.

[8] DOE notes that the software used for its analysis has been employed by numerous motor manufacturers to develop designs that have then been used to produce lines of motors, including capacitor-start and polyphase motors.

a. Electrical Steel

In the NOPR engineering analysis, DOE modeled the use improved grades of electrical steel and thinner laminations to achieve higher motor efficiency. In response to that analysis Baldor and NEMA commented that because DOE's design software bases loss calculations on Epstein core loss values, they believe DOE's modeled efficiencies using improved steel types may overestimate the actual achievable efficiency for a particular motor design. Baldor cited its experience with building and testing multiple motors using various steel types, stating that it has never been shown that the core loss in a motor with round laminations and rotating flux field is directly related to the results of Epstein testing. (Baldor, Public Meeting Transcript, No. 20.4 at pp. 276–80, Baldor, No. 25 at pp. 5–7; NEMA, No. 24 at pp. 23–24) As a result, Baldor asserted that DOE should not rely on steel manufacturer core loss data unless it is able to produce an actual motor to verify its design assumptions. (Baldor, Public Meeting Transcript, No. 20.4 at p. 277) NEEA/NPCC encouraged DOE to investigate the claims made by Baldor at the public meeting and revise the engineering analysis if necessary. (NEEA/NPCC, No. 27 at pp. 9–10)

DOE recognizes that in analyzing motor performance, calculated core losses based on Epstein tests may deviate from actual core losses in the motor.[9] This is primarily due to the harmonic effects created by the distortion of the flux density waveform. When motor core losses are modeled or measured at solely the fundamental frequency, it is possible that additional losses due to these harmonics may not be accounted for, which may yield an overall underestimation of losses. While DOE acknowledges that this phenomenon exists, DOE also believes it has accounted for this effect in its analysis.

As Baldor suggests, one way to ensure that a software model is calibrated correctly to account for effects such as these is to build prototype motors and examine their performance characteristics. Though DOE did not perform such an exercise specifically for this rulemaking, the design software DOE employed for this analysis has been used in the past to design many small motors, whose performance characteristics compare favorably with the model predictions. Baldor did not provide any additional data from which DOE could refine its analysis or perform sensitivity analyses, even though it stated the values of core loss used in DOE's software model were inaccurate.

DOE believes that the variances between Epstein losses and actual motor losses are not an issue for its engineering analysis. It is DOE's understanding that the Epstein core loss data begin to vary significantly from actual motor core losses when various components of the core steel are driven into magnetic saturation. Magnetic saturation is when the amplitude of the magnetic field excitation is large enough to force the flux density (of the magnetic field) into the nonlinear region of the B–H curve. At this point the harmonic components of the electromagnetic field increase.[10] As these harmonic components increase, motor efficiency may be adversely affected and predicted core losses from the Epstein tests will deviate from actual core losses seen in the motor. In order to assess the degree to which these harmonic effects may impact the efficiency of motors analyzed in the engineering analysis, DOE examined the magnetic flux densities at full-load for each motor design. By using steel manufacturer-provided magnetization curves, DOE first determined the saturation point for each of the lamination types. DOE then evaluated each of its motor designs to determine whether it operates near magnetic saturation. The results of this analysis indicated that only two motor designs, the CSIR baseline design and the polyphase efficiency level (EL) 1 design, operate close to the point of magnetic saturation at full load. Based on these results, DOE believes that for all other motor designs, reliance on the Epstein core loss data is appropriate to model motor efficiency.

DOE recognizes that for motors designs operating near the point of magnetic saturation (*i.e.,* CSIR baseline and polyphase EL 1 designs), the modeled efficiency might deviate from a tested efficiency if a prototype were built. With regards to the CSIR baseline design, DOE notes that, as discussed in section IV.C.2.a, the efficiency associated with that design was based on a tested efficiency, rather than a modeled efficiency. Therefore, the baseline efficiency for the CSIR motor should adequately account for any harmonic core loss effects. For the polyphase EL 1 design, DOE recognizes that there may be significant uncertainty in its modeled efficiency. However, as discussed in section VI DOE has found that an efficiency level higher than EL 1 is technologically feasible and economically justified based on the net benefits to the nation and individual consumers. Therefore, DOE's standards-setting decisions in this final rule are not dependent on any uncertainties associated with the polyphase EL1 motor design. Please refer to TSD chapter 5 for additional information regarding the steels used in DOE engineering analysis, their respective saturation levels, and the flux densities of the designs using those steels.

Baldor also questioned the validity of using several higher efficiency steel types in small motors, citing an AK steel publication. Baldor commented that several of the lamination types modeled, namely 24M19 and 29M15, are not recommended for use in motors with less than a 100 horsepower rating. (Baldor, No. 25 at p. 7) DOE has reviewed the referenced AK Steel publication [11] and disagrees with Baldor's assertion. The AK Steel publication does not suggest that 24M19 and 29M15 steels should not be used in motors with less than a 100 horsepower rating; rather it only indicates that small electric motors currently on the market do not typically use these steel grades. In addition, DOE has not received any comments explaining why these lamination types, commonly used in medium motors, would not be applicable to small electric motors. Therefore, in this final rule, DOE continues to use higher efficiency steel grades and thinner laminations in the engineering analysis.

b. Thermal Analysis

NEMA and Baldor also questioned whether a thermal analysis was conducted for the higher efficiency motors modeled, stating the importance of verifying the thermal viability of motor designs. (NEMA, No. 24 at pp. 6–7, Baldor, Public Meeting Transcript, No. 20.4 at pp. 28–29) Emerson commented that the NOPR analysis disregarded MG1 performance requirements, including operating temperatures, potentially cause conflicts with the National Electrical Code. (Emerson, No. 28, p. 2) In response to these comments, DOE has refined its thermal analysis methodology to ensure that it is accurately modeling motor efficiency and that all motor designs

[9] Epstein tests are performed by steel manufacturers to determine expected core loss values in electrical steel. The results of these tests are usually provided by steel manufacturers and are used by motor design engineers to predict motor performance.

[10] Yamazaki, Katsumi; Watanabe, Yuta. "Stray Load Loss Calculation of Induction Motors Using Electromagnetic Field Analysis." IEEJ Transactions on Industry Applications, Volume 128, Issue 1, pp. 56–63.

[11] AK Steel Product Data Bulletin. Nonoriented Electrical Steels. *http://www.aksteel.com/pdf/markets_products/electrical/Non_Oriented_Bulletin.pdf.*

evaluated are thermally viable. As mentioned in section IV.C.2.b, to establish the baseline motors' operating temperatures, DOE conducted tests in accordance with the relevant IEEE test procedures and monitored the temperature rises of the motors. DOE was then able to calculate a thermal resistance for each of the baseline motors. The thermal resistance of each subsequent design was modified to reflect the improved thermal transfer of the more efficient design. As each higher efficiency design was modeled, DOE calculated a new temperature rise. These calculations indicate that as motor efficiency increases (through an increase in the amount of active material and decrease in $I^2R$ losses [12]), the temperature rise of the motor continually decreases. For this reason, DOE believes that all higher efficiency motor designs analyzed in the engineering analysis have lower temperature rises than their respective baseline motors and are thermally viable. See TSD chapter 5 for additional information regarding the actual temperature rises calculated for each of DOE's designs.

c. Performance Requirements

As discussed in section IV.C.2.c, NEMA, through its MG1 publication, lays out a number of performance requirements (breakdown torque, locked rotor torque, and locked rotor current) that motors must meet in order to be considered "general purpose." In response to the small electric motor designs presented in the NOPR, manufacturers commented that some of DOE's more efficient designs do not meet certain performance requirements. Emerson added that many of the design changes that would be necessary to meet these requirements, such as increasing resistance at locked rotor or increasing the number of turns of the stator coils, could actually decrease efficiency. (Baldor, No. 25 at p. 4; Baldor, Public Meeting Transcript, No. 20.4 at pp. 67, 86–87; Baldor, No. 25 at pp. 1–3; Emerson, Public Meeting Transcript, No. 20. 4 at pp. 192–93; Emerson, No. 28, p. 1) Emerson also noted that the costs for the designs might increase when the motors are adjusted to meet these performance characteristics. (Emerson, Public Meeting Transcript, No. 73) In light of these comments, DOE revisited its engineering designs and found that when new performance values were calculated at operating temperatures of 25 °C (as was done for the baseline designs), the vast majority of motors met applicable NEMA standards. For the motors that did not meet breakdown torque, locked rotor torque, or locked rotor current requirements (as presented in TSD Chapter 5), DOE revised these designs such that they adhered to all performance requirements. DOE notes that in some cases, as predicted by manufacturers, the design revisions led to increases in costs to maintain the same level of efficiency. See Chapter 5 of the TSD for further details on the performance characteristics of motor designs analyzed in the engineering analysis and comparisons to NEMA performance requirements.

Baldor also noted that many small electric motors are rated in a broad voltage range (208V to 230V) and asserted (without clarifying) that the NEMA standard specifies these motors must be able to meet NEMA performance requirements over the entire voltage range. Baldor questioned whether DOE's proposed efficiency levels are achievable when motors are operated across this entire voltage range (specifically at 208V). (Baldor, Public Meeting Transcript, No. 20.4 at pp. 271–72) As indicated by Emerson (Emerson, Public Meeting Transcript, No. 20.4 at pp. 273–74), it is DOE's understanding the 208V rating constitutes an unusual service condition. Thus, DOE's engineering analysis was based on motor operation at 230V.

DOE notes that although the NEMA standard may require that certain performance characteristics (such as breakdown torque) be met through the entire rated voltage range, there is no such requirement for Federal efficiency standards. In fact, DOE's test procedures for small electric motors, IEEE 112 (Section 6.1) and IEEE 114 (Section 8.2.1) state that efficiency shall be determined at the rated voltage, without specifying which voltage shall be used in cases where motors are rated with broad voltages or dual voltages. DOE understands that it is at the manufacturer's discretion under which single voltage condition to test its motor. Because the test procedure outputs an efficiency value at a single input voltage, DOE did not conduct an additional analysis at 208V.

Baldor and NEMA stated that MG1 has additional requirements for small electric motors such as voltage unbalance, variation from rated speed, occasional excess current, stall time, overspeed, and sound quality. (Baldor, No. 25 at p. 3; NEMA, No. 24 at p. 9) In examining the variation from rated speed requirements, DOE notes that these are only applicable to medium motors, and thus not relevant to DOE's small electric motor designs. With regard to the other specifications, DOE believes that because it purchased the baseline motors from NEMA manufacturers, it is reasonable to assume that the motors meet NEMA MG1 requirements.

In addition DOE has evaluated each of its motor designs and believes for the following reasons that because the baseline motors likely meet all specifications, then the higher efficiency motors are expected to meet them as well. Specifically, whether a motor is able to meet voltage unbalance, excess current, and stall time requirements is often related to whether a motor overheats at those specified conditions. As the $I^2R$ losses in higher efficiency motors modeled are generally lower than that of the baseline motors (thus, resulting in a lower temperature rise), DOE believes that overheating effects will not be exacerbated with higher efficiency.

For the overspeed requirement, DOE understands that there are several mechanical failure modes that may cause the motor to be unable to withstand speeds above the rated speed. Two primary reasons are the failure of the motor bearings and the potential for the motor shaft to bend, causing the rotor and stator to contact. In addition, DOE understands this issue to be more problematic for medium motors (with larger inertia) than small motors. Finally, for sound quality, decreased current and magnetic flux densities in higher efficiency motors will likely cause the magnitude of the torque pulsations of the motor to decrease during running conditions, reducing noise. The added mass of higher efficiency motors also serves as a dampener to reduce motor vibrations and noise. Given all of these reasons, DOE believes that all motor designs analyzed in the engineering analysis meet the additional performance requirements identified by the commenters.

DOE also received comments at the public meeting regarding the power factor associated with its designs. Baldor commented that during the preliminary analysis stage of the rulemaking some parties preferred that the power factor levels be above 85 percent, but that DOE's analyses utilized a power factor around 71 to 73 percent for polyphase motors. (Baldor, Public Meeting Transcript, No. 20.4 at pp. 275–76) As discussed in the NOPR, DOE understands that sacrificing power factor to obtain gains in efficiency is counterproductive because of the

[12] $I^2R$ losses refer to resistive losses, stemming from current flow through the copper windings in the stator and conductor bars in the rotor and manifest as waste heat which adversely affects the efficiency of a motor.

negative effects on line efficiency. 74 FR 61429 For this reason, DOE maintained or increased the power factor of the baseline motor for each more efficient design. While power factor is generally considered when evaluating the potential benefits related to a particular efficiency level, it is not a design option that necessarily improves the energy efficiency of small electric motors. Increasing power factor could yield results that reduce the energy efficiency of individual units or impose higher costs without an increase in energy efficiency. For this reason, DOE opted not to require its designs to have an 85 percent power factor in its design analysis.

d. Stray Load Loss

In the NOPR, DOE presented values of stray load loss that were modeled in the design software for the baseline and higher efficiency motor designs. The polyphase designs had a value of 2.4 percent for stray load loss, while the CSIR and CSCR designs had a value of 1.8 percent. In response to the NOPR, DOE received several comments regarding the stray load loss values used in its designs. Baldor commented that in the absence of a tested stray load loss value, the IEEE Standard 112 Test Method A (which is referenced as the DOE test procedure for polyphase motors of 1-horsepower or lower) indicates that a value of 1.8 percent should be used. As a result, Baldor questioned the source of DOE's polyphase motor stray load loss value. Baldor was concerned that DOE actually performed IEEE Standard 112 Test Method B, which calculates stray load loss but may yield a different tested efficiency value than Test Method A. In Baldor's view, using Test Method B could potentially skew the analysis. (Baldor, Public Meeting Transcript, No. 20.4 at pp. 280–82; NEMA, No. at pp. 23–24)

Baldor and NEMA also questioned why the stray load loss value of 1.8 percent was used for the single-phase motors when the IEEE Standard 114 test procedure calls for a measurement of stray load losses. (Baldor, Public Meeting Transcript, No. 20.4 at p. 282; NEMA, No. 24 at p. 24) They were concerned that DOE did not follow the IEEE Standard 114 test procedure for the single-phase motors since the stray load loss value used did not appear to be a measured value. (Baldor, Public Meeting Transcript, No. 20.4 at p. 286) Advanced Energy supported DOE's assumptions, commenting that even though IEEE Standard 114 calls for a separation of losses, it also allows an assumed stray load loss value of 1.8 percent when a measured value cannot be determined. (Advanced Energy, Public Meeting Transcript, No. 20.4 at pp. 285–87) NEEA/NPCC also commented that DOE's stray load loss assumptions were appropriate. (NEEA/NPCC, No. 27 at p. 10)

To clarify, DOE tested the polyphase baseline motor according to both the IEEE Standard 112 Method A and Method B test procedures. While Method A is the appropriate DOE test procedure for a 1-horsepower, four-pole small electric motor, Method B determines efficiency by segregating motor losses. When DOE compared the results of Method A and Method B, it found that there was no material difference between the resulting tested efficiencies for this particular motor. Therefore, DOE assumed that it would be most accurate to model the stray load losses determined by IEEE Standard 112 Method B (*i.e.* 2.4 percent) rather than an assumed value (*i.e.* 1.8 percent).

The two baseline single-phase motors were tested according to IEEE Standard 114. As stated by Advanced Energy, the IEEE Standard 114 test procedure provides that if stray load loss is not measured, then the value of stray load loss at rated load may be assumed to be 1.8 percent of the rated load, consistent with DOE's assumption for CSCR and CSIR motors. DOE recognizes that losses can be segregated using the IEEE Standard 114 test procedure and therefore also calculated the stray load losses for the baseline motors. The results of these tests showed that the stray load losses for the CSIR and CSCR baseline motors were 1.8 percent and 1.7 percent. Given the similarity to IEEE Standard 114 assumed value and NEMA's previous recommendation to use this value, DOE believes that the use of 1.8 percent stray load loss for the single-phase motors was appropriate and has used it again for today's final rule.

Additionally, NEMA and Baldor questioned DOE's decision to maintain a constant stray load loss across its designs within a representative product class, stating that it would be unlikely that the use of thinner electrical steels in a longer core length would have resulted in the same level of stray load loss as in the baseline design. (NEMA, No. 24 at p. 24; Baldor, Public Meeting Transcript, No. 20.4 at pp. 281–83) In response, DOE affirms that its assumptions of stray load loss for higher efficiency motor designs are appropriate. DOE recognizes that several factors, such as manufacturing process and harmonic effects, may affect the quantity of stray load loss for a particular motor. However, as discussed earlier, DOE has determined that the majority of motor designs evaluated operate below the point of magnetic saturation, thus reducing the impact of harmonic effects. Additionally, DOE understands that it is common practice for motor design engineers to assume a value of stray load loss either based on experience or as recommended by IEEE test procedures when creating new, potentially more efficient, motor designs. Finally, DOE also notes that both the polyphase and single-phase IEEE test procedures provide precedent for the assumption of constant stray load losses across several motor designs.

e. Stack Length and Core Diameter

In the NOPR, DOE considered an increase in stack length as a viable option for increasing motor efficiency. DOE recognized, however, that limitations for certain motor applications exist because an increase in stack length may cause the motor to exceed the space constraints of the application into which it would reside. Thus, DOE followed a suggestion made by NEMA during the preliminary analysis stage and limited the stack length increases for space-constrained applications to no more than a 20 percent increase over the baseline motor. (NEMA, No. 13, at p. 4) For applications that DOE considered non-space constrained, the stack length of the motor was allowed to increase by up to 100 percent of the stack length of the baseline motor (*i.e.* it could double).

In response to the NOPR analysis, several interested parties commented on DOE's assumptions of space constraints and stack length increases. WEG questioned if the 20 percent increase in stack length for space constrained applications is an appropriate tolerance. (WEG, Public Meeting Transcript, No. 20.4 at p. 83) A.O. Smith commented that doubling the stack length in non-space constrained applications will be somewhat impractical for customers' applications. (A.O. Smith, Public Meeting Transcript, No. 20.4 at p. 81).

In response to the manufacturers' comments, DOE maintains that the 20 percent increase in stack length for space-constrained applications that was used in the NOPR is still an acceptable tolerance. DOE notes that NEMA reiterated its support for this design constraint in its comments responding to the NOPR, by citing its recommendation from the preliminary analysis. (NEMA, No. 24 at p. 9) Regarding doubling the stack length of the motor, DOE also believes this is an appropriate tolerance for non-space constrained applications. When DOE solicited engineering cost-efficiency

curves from manufacturers for the preliminary analysis, all participating manufacturers suggested that increasing stack height would be one of the first design options used to achieve greater efficiencies because of the relative cost of this design option versus a change in steel type lamination. In designs provided by all of these manufacturers, stack increases of well over 100 percent relative to the baseline were used to achieve target efficiency levels that DOE provided to manufacturers. Accordingly, DOE believes that for those applications that are non-space constrained, a stack increase of 100 percent is an appropriate and even a likely design option that manufacturers could employ. DOE accounts for the costs associated with increasing a motor's stack length in markups analysis (see section IV.D).

Emerson also commented that the NOPR efficiency levels would require several motors to increase in frame size. (Emerson, No. 28 at p.1) However, DOE disagrees with Emerson's comments and notes that for all higher efficiency designs developed in the engineering analysis, core diameter was held constant to the baseline value. As only an increase in core diameter would force a frame size increase, DOE believes that all efficiency levels analyzed can be achieved without increasing frame size.

4. Cost Model

For the NOPR engineering analysis, DOE estimated the manufacturing production cost (MPC) of small electric motors by using outputs of the design software to generate a complete bill of materials. The bill of materials was marked up to account for scrap, overhead (which includes depreciation) and associated non-production costs such as interest payments, research and development, and sales and general administration. To account for the increased depreciation of equipment associated with manufacturing a copper rotor, DOE used separate overhead markups for motor designs using copper and aluminum rotors. The software output also included an estimate of labor time associated with each step of motor construction. DOE multiplied these estimates by a fully burdened labor rate to obtain an estimate of labor costs.

DOE estimated input costs by using an inflation-adjusted 5-year average of prices for each of the input commodities: Steel laminations, copper wiring, and aluminum and copper for rotor die-casting. This method for calculating costs is consistent with past rulemakings where material costs were a significant part of manufacturers' costs. In calculating the 5-year average prices for these commodities, DOE adjusted historical prices to 2008 terms using the historical Producer Price Index (PPI) for that commodity's industry. For this final rule, DOE updated material prices using the PPI to reflect 2009$. After calculating the MPC, DOE applied a 1.45 manufacturer markup to arrive at the MSP.

Emerson commented that it was concerned that DOE had not appropriately accounted for the significant costs associated with implementing the technology to manufacture motors with copper die-cast rotors in the engineering analysis. (Emerson, Public Meeting Transcript, No. 20.4 at p. 94) DOE recognizes that there are additional costs associated with implementing copper die-cast rotors and has incorporated higher depreciation costs in the Engineering Analysis for designs requiring this technology.

With regard to the accounting of higher depreciation for equipment used to manufacture copper die-cast rotors, NEEA/NPCC supported DOE's approach to using different overhead markups for designs with copper rotors and those with aluminum rotors. (NEEA/NPCC, No. 27 at p. 9) NEMA commented that since motor manufacturers typically standardize its production process for a product line, the higher overhead attributable to the application of advanced technologies will be applied over all production unless the manufacturer exits that portion of the market. (NEMA, No. 24 at p. 9) As all comments supported the use of higher markups when manufacturing copper rotors, DOE maintained this approach in the engineering analysis for the final rule. See section IV.C.4 for further details.

5. Efficiency Scaling

For the NOPR, in order to scale efficiency levels from the representative product classes to the other product classes, DOE used data on commercially-available motors to investigate how changing horsepower or pole configuration affects efficiency, DOE evaluated product lines of different manufacturers separately. In developing these efficiency relationships, DOE considered only motors of the most restrictive frame size for a given product class to ensure that the most dimensionally-constrained motors on the market would be able to meet all efficiency levels derived. DOE then converted these efficiency relationships across product class into motor loss relationships. DOE applied these relationships (as a percentage change in motor losses) to each efficiency level analyzed for the representative product classes, ultimately deriving corresponding efficiency levels for product classes not directly analyzed in the engineering analysis. DOE repeated this analysis for each manufacturer's product line for which sufficient data were available. Finally, DOE averaged the results based on each of the manufacturer's product lines to obtain aggregated scaled efficiency levels for all product classes.

DOE received several comments on the results and methodology of the proposed scaling analysis. While NEAA/NPCC supported DOE's scaling methodology (NEEA/NPCC, No. 27 at p. 9), Baldor stated that the scaling presented is likely not accurate because of the difficulty in predicting efficiencies when changing frame sizes, horsepower, and pole configurations. Instead, Baldor commented that DOE should create a motor design for each non-representative product class to verify the scaled efficiencies. (Baldor, Public Meeting Transcript, No. 20.4 at p. 97; Baldor, No. 25 at p. 8) WEG also commented that the scaling should take into account not only the change in efficiency associated with altering horsepower or pole configuration, but also the drop in efficiency associated with moving from a 56-frame to a 48-frame, and potentially a smaller core diameter. (WEG, Public Meeting Transcript, No. 20.4 at p. 220)

In addition, with regard to the polyphase motor scaling, several manufacturers pointed to the efficiencies at high horsepower ratings as evidence that DOE scaling was flawed. Specifically, they remarked that although the proposed level for the representative polyphase product class harmonized with medium motor NEMA Premium efficiency standards, the 3-horsepower, six-pole polyphase motor had a scaled efficiency greater than the NEMA Premium level.[13] They also noted that because the comparable medium motor for that product class is built in a 213 T-frame (larger than a 56-frame), it may be unreasonable to require a 56-frame motor to have a higher efficiency. (A.O. Smith, No. 26 at p. 2; Baldor, No. 25 at p. 8; Baldor, Public Meeting Transcript, No. 20.4 at pp. 100–101, 212–213; Regal-Beloit,

[13] NEMA Premium refers to efficiency levels for three-digit frame series medium electric motors developed by NEMA to identify high efficiency motors. Congress subsequently adopted those levels for medium electric motors. See EISA 2007, Sec. 313(b).

Public Meeting Transcript, No. 20.4 at pp.105)

DOE agrees that the efficiency behavior at high horsepower ratings for polyphase motors indicated a lack of accuracy in the NOPR scaling, and has revised its analysis for the final rule. Baldor's recommendation to generate motor designs to validate scaling essentially constitutes developing an additional engineering analysis for every product class, which is atypical for DOE rulemakings and unnecessary because it defeats the purpose of using a scaling methodology. In addition, DOE notes that in its comments on the preliminary analysis, NEMA recommended that DOE utilize product literature to derive efficiency levels for product classes not directly analyzed in the engineering analysis, which was a significant reason why DOE maintained a scaling approach based partially on publicly available data. (NEMA, No. 13, at p. 10) Thus, DOE believes scaling is an appropriate approach to developing efficiency levels. As interested parties did not recommend a new methodology for scaling, DOE based it revised scaling on the same general methodology (establishing relationships in efficiency across horsepower ratings and pole configurations), but utilized additional sources of data to refine its inputs.

One new source of data DOE utilized was the NEMA recommended standard levels for polyphase, CSIR, and CSCR motors built in small frames (42- and 48-frames) and in 56-frames. These recommended standard levels included efficiencies for motors with horsepower ratings less than and equal to 1-horsepower and with two-, four-, or six-pole configurations. (NEMA, No. 24 at p. 1) DOE first examined this data to see how it compared to the efficiency data of motors currently on the market. DOE noted that the efficiency relationships that NEMA presented between product classes were comparable to the market data that DOE had collected for the NOPR. For this reason, DOE concludes that NEMA's recommended standard levels can be used to establish appropriate efficiency (or loss) relationships for lower horsepower polyphase, CSIR, and CSCR motors.

For the high horsepower (greater than or equal to 1-horsepower) polyphase motors, DOE utilized the relationships found in the NEMA Premium standards for electric motors. As seen in Table IV.7, the majority of the NEMA Premium standards between 1- and 3-horsepower are based on motors with a frame size in the 140T series, which has the same foot to shaft dimension as the 56-frame motor. Therefore, for these 140T series product classes, DOE used NEMA Premium efficiencies to develop relationships across horsepower ratings and poles. DOE did not use the efficiency relationships found from NEMA Premium classes associated with larger frame sizes (182T). For these horsepower/pole configurations, DOE did not have sufficient efficiency data to determine appropriate scaling relationships. Thus, though efficiency generally increases with horsepower, in order to ensure that all efficiency levels are technologically feasible, DOE decided that the 3-horsepower, four-pole motor and 1½-horsepower, two pole motor would have the same minimum efficiency standards as the 2-horsepower, four-pole motor and 1-horsepower, two-pole motor, respectively.

TABLE IV.7—FRAME SIZES ASSOCIATED WITH NEMA PREMIUM STANDARDS

| Motor horsepower/standard kilowatt equivalent | Six poles | Four poles | Two poles |
|---|---|---|---|
| 1 hp/0.75 kW | 56 | 143T | 145T |
| 1½ hp/1.1 kW | 143T | 145T | 182T |
| 2 hp/1.5 kW | 145T | 145T | ..... |
| 3 hp/2.2 kW | 145T | 182T | ..... |

In the absence of any standardized efficiency levels above 1-horsepower for CSIR motors (such as those provided in the NEMA Premium table for polyphase motors), DOE continued to use market efficiency data. Since this approach, when used in the NOPR, resulted in some aberrations (abnormally high efficiencies) for high horsepower polyphase motors, DOE modified its methodology slightly for the final rule to result in more appropriate scaling relationships. As stated earlier, for the NOPR, because some manufacturers showed larger increases in efficiency with increasing horsepower than others, DOE averaged data from several manufacturer product lines to create efficiency relationships. However, for this final rule, to ensure the technological feasibility of all scaled efficiency levels, instead of averaging data from all manufacturers, DOE selected the product line which resulted in the most achievable efficiency levels.

As mentioned in the NOPR, DOE was unable to locate sufficient market data for CSCR motors. However, DOE data indicate that CSCR motors exhibit scaling relationships similar to CSIR motors. For these reasons, DOE decided to continue utilizing CSIR market data to characterize the efficiency (or loss) relationships present in the CSCR market at high horsepower ratings.

Next, DOE addressed changes in physical dimensions of motors across horsepower ratings and pole configurations. As discussed earlier, DOE recognizes that core diameter affects the amount of active material that is used to reduce motor losses, thus impacting efficiency. If DOE were to set a standard based on an analysis of a motor of larger core diameter, it could potentially eliminate smaller core diameter motors from the market. Therefore, after establishing the efficiency relationships (by using the NEMA recommended levels, the NEMA Premium levels, and market data), DOE accounted for the fact that for some horsepower/pole configurations, 48-frame size motors are commercially available, while for others, only 56-frame size motors are commercially available.

As stated by WEG at the NOPR public meeting, a reduction in frame size (or core diameter) should accompanied by a reduction in efficiency. To determine the appropriate efficiency reduction of shifting from a motor with a core diameter representative of a 56-frame to a core diameter representative of a 48-frame, DOE again utilized the NEMA recommended efficiencies. From these efficiency values, DOE noted that according to NEMA a shift in frame size constitutes approximately a 20 percent change in losses. DOE applied this 20 percent reduction in losses to product classes for which 42 frame or 48-frame motors are commercially available. DOE intends for its loss scaling analysis to reflect motors in the smallest commercially available frame size for each product class.

After deriving efficiency relationships accounting for changes in horsepower, pole configuration, and core diameter, DOE then applied these relationships (as a percentage change in motor losses)

to each efficiency level of the representative product classes, ultimately deriving corresponding efficiency levels for the non-representative product classes.

6. Cost-Efficiency Results

The results of the engineering analysis are reported as cost-efficiency data (or "curves") in the form of MSP (in dollars) versus full-load efficiency (in percentage). These data form the basis for subsequent analyses in the final rule. As discussed in the NOPR, DOE developed two curves for each product class analyzed, one for the space-constrained set of designs restricted by a 20-percent increase in stack height and one for the non-space constrained set of designs restricted by a 100-percent increase in stack height relative to the baseline.

NEMA recommended efficiency levels for small electric motors that it believed would be technologically feasible to implement by 2015. NEMA presented six separate sets of efficiency levels, one for 56-frame size motors in each of the three motor categories and one for 42- and 48-frame size motors in each of the three motor categories. (NEMA, No. 24 at p. 1) When DOE revised its engineering analysis, it ensured that each of its representative units had an efficiency level that corresponded to one of those sets of standards. For CSIR motors, NEMA proposed an efficiency value of 72.0 percent for a 48-frame size, four-pole ½-horsepower motor. This proposal roughly corresponds to DOE's efficiency level 4 for CSIR motors. For CSCR motors NEMA proposed an efficiency value of 80.0 percent for a 56-frame size, four-pole, ¾-horsepower motor. This proposal corresponds to DOE's efficiency level 2 for CSCR motors.

For polyphase motors, NEMA did not present an efficiency value for the four-pole, 1-horsepower product class. In light of this, DOE utilized its scaling model to identify the projected efficiency for the four-pole, 1-horsepower product class according to NEMA's recommendations for the 42- and 48-frame size motors. DOE used the 42/48-frame size proposed levels to apply to its representative product class because the core diameter of its baseline model is representative of 48-frame size motors. DOE projects this efficiency value to be approximately 82.6 percent for the representative polyphase motor. As this efficiency lies between the designs analyzed for EL 4 and EL5, DOE created an additional efficiency level at 82.6 percent, denoted EL 4b. DOE developed a new space constrained and non-space constrained design at this efficiency level that adhered to all of DOE's design limitations.

Table IV.8 through Table IV.10 show the efficiency value and manufacturer selling price data for each EL examined in the final rule.

TABLE IV.8—EFFICIENCY AND MANUFACTURER SELLING PRICE DATA FOR POLYPHASE MOTOR

| Efficiency level | Efficiency (%) (Design 1/Design 2) * | Manufacturer selling price ($) (Design 1/Design 2) * |
|---|---|---|
| Baseline | 75.3 | 98.54 |
| EL 1 | 77.3 | 104.83 |
| EL 2 | 78.8 | 108.17 |
| EL 3 | 80.5 | 114.24 |
| EL 4 | 81.1 | 118.54 |
| EL 4b | 83.5/83.5 | 135.62/134.04 |
| EL 5 | 85.3/85.2 | 230.92/153.92 |
| EL 6 | 86.2/86.3 | 237.70/186.37 |
| EL 7 (Max-tech) | 87.7/87.8 | 1,766.06/326.18 |

* Design 1 denotes the space-constrained design, and Design 2 denotes the non-space-constrained design. If only one value is listed, then the space-constrained design is the same as the non-space-constrained design.

TABLE IV.9—EFFICIENCY AND MANUFACTURER SELLING PRICE DATA FOR CAPACITOR-START, INDUCTION-RUN MOTOR

| Efficiency level | Efficiency (%) (Design 1/Design 2) * | Manufacturer selling price ($) (Design 1/Design 2) * |
|---|---|---|
| Baseline | 57.9 | 91.24 |
| EL 1 | 61.1 | 95.43 |
| EL 2 | 63.5 | 98.45 |
| EL 3 | 65.7 | 99.58 |
| EL 4 | 70.6/70.5 | 114.31/106.99 |
| EL 5 | 71.8/71.8 | 117.07/118.00 |
| EL 6 | 73.1/73.3 | 182.09/132.22 |
| EL 7 (Max-tech) | 77.6/77.7 | 1,200.98/151.25 |

* Design 1 denotes the space-constrained design, and Design 2 denotes the non-space-constrained design. If only one value is listed, then the space-constrained design is the same as the non-space-constrained design.

TABLE IV.10—EFFICIENCY AND MANUFACTURER SELLING PRICE DATA FOR CAPACITOR-START, CAPACITOR-RUN MOTOR

| Efficiency level | Efficiency (%) (Design 1/Design 2) * | Manufacturer selling price ($) (Design 1/Design 2) * |
|---|---|---|
| Baseline | 71.4 | 111.72 |
| EL 1 | 75.1 | 117.13 |
| EL 2 | 79.5/79.5 | 137.20/129.88 |

TABLE IV.10—EFFICIENCY AND MANUFACTURER SELLING PRICE DATA FOR CAPACITOR-START, CAPACITOR-RUN MOTOR—Continued

| Efficiency level | Efficiency (%) (Design 1/Design 2) * | Manufacturer selling price ($) (Design 1/Design 2) * |
|---|---|---|
| EL 3 | 81.7/81.8 | 142.63/135.56 |
| EL 4 | 82.8/82.8 | 146.44/142.76 |
| EL 5 | 84.1/84.0 | 154.55/151.91 |
| EL 6 | 84.8/84.6 | 236.98/158.25 |
| EL 7 | 86.8/86.7 | 244.03/175.75 |
| EL 8 (Max-tech) | 88.1/87.9 | 1,771.47/327.69 |

* Design 1 denotes the space-constrained design, and design 2 denotes the non-space-constrained design. If only one value is listed, then the space-constrained design is the same as the non-space-constrained design.

*D. Markups To Determine Equipment Price*

To calculate the equipment prices faced by small electric motor purchasers, DOE multiplied the manufacturing costs developed from the engineering analysis by the supply chain markups it developed (along with sales taxes). In the NOPR, DOE explained how it developed the distribution channel markups used. 74 FR 61434.

DOE did not receive comments on these markups; however, in written comments, NEMA and DOJ commented that some original equipment manufacturers (OEMs) could incur additional design costs to redesign their products to accommodate the increased size of more efficient motor designs. (NEMA, No. 24 at p.19 and DOJ No. 29 at p. 2) DOE recognizes that motors produced following the introduction of the standards described in this rule will likely be different in size and shape from motors produced today. In particular, the designs produced in DOE's engineering analysis exhibit longer stack length to increase efficiency. DOE also projects that the standards may result in significant increases in market share for CSCR motors (which have an extra external capacitor). DOE understands that these changes may result in the need for some OEMs who incorporate these motors to redesign their products. Nationally, about 2.5% of U.S. gross domestic product is spent on research and development (R&D; National Science Board. 2010. Science and Engineering Indicators 2010. Arlington, VA: National Science Foundation (NSB 10–01)). DOE estimates that R&D by equipment OEMs, including the design of new products, generally represents approximately 2 percent of company revenue. This percentage is slightly less than the national average to account for high technology companies that generally spend a much larger fraction of revenue on R&D than OEMs of equipment that incorporate small motors. DOE accounted for the additional costs to redesign products and incorporate differently-shaped motors by adding 2% to the OEM markup, increasing the baseline OEM markup from 1.37 to 1.39 and the incremental OEM markup from 1.27 to 1.29 for OEMs without a distributor, and 1.33 to 1.35 for OEMs that purchase motors through distributors.

DOE used these markups, along with sales taxes, installation costs, and manufacturer selling prices (MSPs) developed in the engineering analysis, to arrive at the final installed equipment prices for baseline and higher efficiency small electric motors. As explained in the NOPR (74 FR 61434), DOE defined three distribution channels for small electric motors to describe how the equipment passes from the manufacturer to the customer. DOE retained the same distribution channel market shares described in the NOPR.

Table IV.11 summarizes for each of the three identified distribution channels the baseline and incremental markups at each stage and the overall markups, including sales taxes. Weighting the markups in each channel by its share of shipments yields an average overall baseline markup of 2.52 and an average overall incremental markup of 1.86. DOE used these markups for all three types of motors.

TABLE IV.11—SUMMARY OF SMALL ELECTRIC MOTOR DISTRIBUTION CHANNEL MARKUPS

| | Direct to OEMs 65% | | Via distributors to OEMs 30% | | Via distributors to end-users 5% | |
|---|---|---|---|---|---|---|
| | Baseline | Incremental | Baseline | Incremental | Baseline | Incremental |
| Wholesale Distributor | ..... | ..... | 1.28 | 1.10 | 1.28 | 1.10 |
| OEM | 1.39 | 1.29 | 1.39 | 1.35 | ..... | ..... |
| Retail and Post-OEM Distributor | 1.43 | 1.18 | 1.43 | 1.18 | 1.44 | 1.18 |
| Contractor or Installer | 1.10 | 1.10 | 1.10 | 1.10 | 1.10 | 1.10 |
| Sales Tax | 1.0684 | | 1.0684 | | 1.0684 | |
| Overall | 2.34 | 1.79 | 2.99 | 2.06 | 2.17 | 1.53 |

Using these markups, DOE generated motor end-user prices for each efficiency level it considered, assuming that each level represents a new minimum efficiency standard. Because it generated a range of price estimates,

DOE describes prices within a range of uncertainty.

Chapter 7 of the TSD provides additional detail on the markups analysis.

*E. Energy Use Characterization*

The energy use characterization estimates the annual energy consumption of small electric motors. This estimate is used in the subsequent LCC and PBP analyses (chapter 8 of the TSD) and National Impacts Analysis (NIA) (chapter 11 of the TSD). DOE determined the annual energy consumption of small electric motors by multiplying the energy use while in operation by the annual hours of operation. The energy use in operation is a function of the motor loading and the losses resulting from motor operation, based on the motor designs characterized in the engineering analysis. DOE's motor designs are also characterized by their power factor, which allows DOE to estimate the reactive power requirements of each analyzed motor.

1. Applications

DOE's shipments analysis indicates that small electric motors are used in five application categories: Pumps; fans and blowers; air compressors; conveyors and material handling; and general industrial or miscellaneous applications. Motor energy use depends on application because different applications have different annual hours of operation and different average motor loading.

In the NOPR, DOE presented the results of an analysis of motor shipments into the five application categories. Table IV.12 shows the distribution of motor shipments by application presented in the NOPR.

TABLE IV.12—DISTRIBUTION OF MOTORS BY APPLICATION AND MOTOR TYPE

| Motor application | Polyphase (%) | CSIR (%) | CSCR (%) |
|---|---|---|---|
| Reference Case: | | | |
| Air and gas compressors | 17.3 | 14.9 | 14.9 |
| Conveyors & packaging equipment | 13.3 | 11.9 | 11.9 |
| General industrial machinery | 11.3 | 12.5 | 12.5 |
| Indus. and comm. fans and blowers | 7.3 | 6.9 | 6.9 |
| Pumps and pumping equipment | 50.7 | 53.7 | 53.7 |
| Service industry | 0.0 | 0.0 | 0.0 |
| Total | 100.0 | 100.0 | 100.0 |
| Sensitivity (NEMA Survey): | | | |
| Air and gas compressors | 45 | 22 | 45 |
| Conveyors & packaging equipment | 5 | 2 | 2 |
| General industrial machinery | 7 | 1 | 1 |
| Indus. and comm. fans and blowers | 23 | 51 | 29 |
| Pumps and pumping equipment | 15 | 13 | 12 |
| Service industry | 5 | 11 | 11 |
| Total | 100.0 | 100.0 | 100.0 |

In written comments, NEMA submitted the results of a survey of their OEM customers for motors which NEMA considers to be covered products. (NEMA, No. 24 at pp. 19 to 21) The survey reports distributions by application and owner type, estimates of annual hours of operation, and the fraction of motors that are space-constrained. NEMA also provided information on a sixth application not included in DOE's NOPR, service industry motors. The distribution by application and motor type provided by NEMA is also shown in Table IV.13.

DOE has concerns about the accuracy of the results of this survey. It is not clear which OEMs were contacted for the survey, how many responded, how representative the respondents are of the small motor market, and what specific questions were asked. It is also not clear that the survey results represent an accurate picture of the entire U.S. market for small motors, or how all OEMs will respond to today's rule. In contrast, the distributions by motor application that DOE used in the NOPR were based on analysis conducted in the early stages of the rulemaking, supplemented by a review of U.S. Census and U.S. Customs data regarding production and imports of motors and equipment containing motors. For these reasons, DOE retained its assumptions regarding the distribution of motors by application and sector; however, DOE did run a sensitivity case that reflects the results of the NEMA survey. This sensitivity is discussed in Section VI, and the detailed results are presented in the TSD.

Table IV.13 shows the distributions of motors by sector within each application used in the NOPR, as well as the results provided by the NEMA survey.

TABLE IV.13—DISTRIBUTION OF MOTORS BY APPLICATION AND SECTOR

| Application | Sector | | | | Total (%) |
|---|---|---|---|---|---|
| | Industrial (%) | Commercial (%) | Agricultural (%) | Residential (%) | |
| Reference Case: | | | | | |
| Air and gas compressors | 40 | 40 | 10 | 10 | 100 |
| Conveyors & Packaging Equipment | 40 | 50 | 10 | 0 | 100 |
| General industrial machinery | 50 | 40 | 10 | 0 | 100 |
| Indus. and comm. fans and blowers | 50 | 50 | 0 | 0 | 100 |

TABLE IV.13—DISTRIBUTION OF MOTORS BY APPLICATION AND SECTOR—Continued

| Application | Sector | | | | Total (%) |
|---|---|---|---|---|---|
| | Industrial (%) | Commercial (%) | Agricultural (%) | Residential (%) | |
| Pumps and pumping equipment | 40 | 35 | 20 | 5 | 100 |
| Service industry | 0 | 0 | 0 | 0 | N/A |
| Sensitivity (NEMA Survey): | | | | | |
| Air and gas compressors | 0 | 15 | 15 | 70 | 100 |
| Conveyors & Packaging Equipment | 65 | 35 | 0 | 0 | 100 |
| General industrial machinery | 80 | 20 | 0 | 0 | 100 |
| Indus. and comm. fans and blowers | 20 | 80 | 0 | 0 | 100 |
| Pumps and pumping equipment | 10 | 40 | 20 | 30 | 100 |
| Service industry | 10 | 80 | 0 | 10 | 100 |

2. Annual Hours of Operation and Motor Loading

In the NOPR, and in today's final rule, DOE characterized the motor loading and annual hours of operation with distributions for each analyzed motor application. DOE's estimates of the average motor loading in each application are unchanged from the NOPR to today's final rule. Table IV.14 shows the average loading in each application. DOE assumed that the motor loading distribution took the form of a normal distribution, centered on the average value, with a standard deviation equal to one fifth of the average loading. Details on these calculations are provided in chapter 6 of the TSD.

TABLE IV.14—AVERAGE MOTOR LOADING BY APPLICATION

| Application | Average loading (%) |
|---|---|
| Air and gas compressors | 85 |
| Conveyors & Packaging Equipment | 50 |
| General industrial machinery | 70 |
| Indus. and comm. fans and blowers | 80 |
| Pumps and pumping equipment | 65 |
| Service industry | 70 |

In the NOPR, DOE assumed distributions of the annual hours of operation in each application with means and medians as shown in Table IV.15. At the December 17, 2009 public meeting, Emerson commented that the average hours of operation within each application assumed by DOE are too high (Emerson, Public Meeting Transcript No. 20.4 at pp. 197–99). According to Emerson, the distribution of hours of operation that DOE assumed for each application, detailed in the TSD, is a highly skewed distribution in which the mean and median can be significantly different. As a result of its survey of OEMs, NEMA reported lower hours of operation only for compressors, and reported that service industry motors run 1000 hours per year on average, with a median of 400 hours. However, by including in the table in their written comments the operating hour assumptions DOE used in the NOPR for the other applications, NEMA appears to accept DOE's assumptions of hours of operation for conveyors, general industrial machinery, fans and blowers, and pumps. The mean and median hours of operation in each application in the reference and sensitivity case are shown in Table IV.15.

TABLE IV.15—MEDIAN AND MEAN ANNUAL HOURS OF OPERATION AND FRACTION THAT RUN ALL THE TIME, BY MOTOR APPLICATION

| Application | Annual Hours of Operation | | Fraction of motors that run all the time (%) |
|---|---|---|---|
| | Median | Mean | |
| Reference Case: | | | |
| Air and gas compressors | 375 | 600 | 0 |
| Conveyors & Packaging Equipment | 2000 | 3000 | 8 |
| General industrial machinery | 1200 | 2000 | 4 |
| Indus. and comm. fans and blowers | 2825 | 4500 | 40 |
| Pumps and pumping equipment | 1850 | 3000 | 12 |
| Service industry | NA | NA | NA |
| Sensitivity (NEMA Survey): | | | |
| Air and gas compressors | 100 | 200 | 0 |
| Conveyors & Packaging Equipment | 2000 | 3000 | 0 |
| General industrial machinery | 1200 | 2000 | 4 |
| Indus. and comm. fans and blowers | 2825 | 4500 | 10 |
| Pumps and pumping equipment | 1850 | 3000 | 12 |
| Service industry | 400 | 1000 | 2 |

*F. Life-Cycle Cost and Payback Period Analysis*

In response to the requirements of section 325(o)(2)(B)(i) of the Act, DOE conducted LCC and PBP analyses to evaluate the economic impacts of possible amended energy conservation standards on small electric motor customers. This section of the notice describes these analyses. DOE conducted the analysis using a spreadsheet model developed in Microsoft (MS) Excel for Windows 2003.

The LCC is the total consumer expense over the life of the equipment, including purchase and installation expense and operating costs (energy expenditures, repair costs, and maintenance costs). The PBP is the number of years it would take for the consumer to recover the increased costs of a higher-efficiency equipment through energy savings. To calculate the LCC, DOE discounted future operating costs to the time of purchase and summed them over the lifetime of the equipment. DOE measured the change in LCC and the change in PBP associated with a given efficiency level relative to a base case forecast of equipment efficiency. The base case forecast reflects the market in the absence of amended mandatory energy conservation standards. As part of the LCC and PBP analyses, DOE developed data that it used to establish equipment prices, installation costs, annual energy consumption, energy and water prices, maintenance and repair costs, equipment lifetime, and discount rates.

Table IV.16 summarizes the approaches and data DOE used to derive the inputs to the LCC and PBP calculations for the NOPR. For today's final rule, DOE did not introduce changes to the LCC and PBP analyses methodology described in the NOPR, but incorporated changes to the inputs to the analysis to account for updates to the engineering analysis and energy price trends and to analyze the sensitivity of the results using the survey data NEMA provided. Chapter 8 of the TSD contains detailed discussion of the methodology utilized for the LCC and PBP analyses as well as the inputs developed for the analyses.

TABLE IV.16—SUMMARY OF INPUTS AND KEY ASSUMPTIONS IN THE LIFE-CYCLE COST AND PAYBACK PERIOD ANALYSES

| Inputs | NOPR | Changes for the Final Rule |
|---|---|---|
| **Affecting Installed Costs** | | |
| Equipment Price | Derived by multiplying manufacturer cost by manufacturer, distributor and OEM markups, and sales tax. | No change. |
| Installation Cost | Based on data from RSMeans | No change. |
| **Affecting Operating Costs** | | |
| Annual Energy Use | Derived by multiplying hours of operation by losses, accounting for motor loading. Reactive power demand calculated from power factor. | No change in operating hours in the reference case; changes to operating hours of compressors in the sensitivity cases. Losses, loading and reactive power changed slightly, as a result of the updated engineering analysis. |
| Energy Prices | Electricity: Distribution of values for each sector, updated using EIA's 2007 Form 861 data. | No change. |
| Energy Price Trends | Energy: Reference Case forecast updated with EIA's *AEO 2009* April Release. High-Price and Low-Price forecasts updated with EIA's *AEO 2009* March Release. Carbon Cap and Trade case from Lieberman-Warner. | *AEO 2010* for the reference; ratios from *AEO 2009* March release used for high and low. |
| Repair and Maintenance Costs | Unchanging with efficiency | No change. |
| **Affecting Present Value of Annual Operating Cost Savings** | | |
| Equipment Lifetime | Mean of 7 and 9 years. Lifetime is correlated with annual hours of operation. | No change. |
| Discount Rates | Approach based on cost of capital of publicly traded firms in the sectors that purchase small electric motors. Primary data source is Damodaran Online.[14] | No change. |
| **Affecting Installed and Operating Costs** | | |
| Space Constraints | Assumed 20% of motors in OEM applications face space constraints. | No change in reference case; analyzed 62% and 95% sensitivity cases. |
| Effective Date of New Standard | 2015 | No change. |

1. Installation Cost

Installation costs include labor, overhead, and any miscellaneous materials and parts. For the NOPR and today's final rule, DOE used data from the RS Means *Mechanical Cost Data,* 2008 on labor requirements to estimate installation costs for small electric motors. DOE estimates that installation costs do not increase with equipment efficiency.

[14] Please see the following Web site for further information: *http://pages.stern.nyu.edu/adamodar/.*

2. Energy Prices

For both the NOPR and today's final rule, DOE developed nationally representative distributions of electricity prices for different customer categories (industrial, commercial, and residential) from 2007 Energy Information Administration (EIA) Form 861 data, the most recent data available.

DOE estimates that marginal energy prices for electric motors are close to average prices, which vary by customer type and utility. The average prices (in 2009$) for each sector are 7.5 cents for the industrial and agricultural sectors, 10.4 cents for the commercial sector, and 11.7 cents for the residential sector. DOE also estimated an average reactive power charge of $0.51 per kilovolt-amps reactive (kVAr) per month using survey data provided in written comments submitted during the preliminary analysis stage of the rulemaking by Edison Electric Institute. The data identified those customers who are subject to a reactive power charge. (EEI, No. 14 at p. 6)

3. Energy Price Trend

To estimate the trends in electricity prices for the NOPR, DOE used the price forecasts in the 2009 Annual Energy Outlook (*AEO 2009)* April Release.[15] To arrive at prices in future years, DOE multiplied the average prices described above by the forecast of annual average price changes. Because the *AEO 2009* forecasts prices only to 2030, DOE followed past guidelines provided to the Federal Energy Management Program by EIA and used the average rate of change during 2020–2030 to estimate the price trends beyond 2030. For today's final rule, DOE had updated its analysis to use the price forecasts in the *AEO 2010* Early Release, which includes price forecasts until 2035. DOE used the average rate of change from 2025 to 2035 to estimate price trends beyond 2035.

The spreadsheet tools used to conduct the LCC and PBP analysis allow users to select either the *AEO's* high-price case or low-price case price forecasts to estimate the sensitivity of the LCC and PBP to different energy price forecasts. The *AEO 2009* April Release and *AEO 2010* Early Release only provide forecasts for the Reference Case. Therefore, for the NOPR, DOE used the *AEO 2009* March Release high-price or low-price forecasts directly to estimate high-price and low-price trends. For today's final rule, DOE updated the low-price ad high-price forecasts to be based on the ratio between the *AEO 2009* March Release low- or high-price forecasts and the *AEO 2009* March Release reference case. DOE then applied these ratios to the *AEO 2010* Early Release reference case to construct its high-price and low-price forecasts.

[15] All AEO publications are available online at: *http://www.eia.doe.gov/oiaf/aeo/.*

4. Maintenance and Repair Costs

Small electric motors are not usually repaired, because they often outlast the equipment in which they are installed. DOE found no evidence that repair or maintenance costs would increase with higher motor energy efficiency. In response to the preliminary analysis, no interested parties provided any comments or data indicating that maintenance or repair costs are likely to change with motor efficiency. Thus, in today's final rule DOE did not change the repair and maintenance costs for motors that are more efficient than baseline products that were presented in the NOPR.

5. Equipment Lifetime

For the NOPR and today's final rule, DOE developed motor lifetime distributions for each motor application, with a mean of seven years for capacitor-start motors and a mean of nine years for polyphase motors. Each distribution incorporates a correlation between the motor annual hours of operation and the motor lifetime. Motor lifetime is governed by two Weibull distributions. One characterizes the motor lifetime in total operating hours while the other characterizes the lifetime in years of use in the application. Motors are retired from service at the age when they reach either of these limits.

6. Discount Rates

The discount rate is the rate at which future expenditures are discounted to estimate their present value. DOE used the classic economic definition that discount rates are equal to the cost of capital. The cost of capital is a combination of debt interest rates and the cost of equity capital to the affected firms and industries. For each end-use sector, DOE developed a distribution of discount rates. DOE's methodology and inputs for calculating discount rates are unchanged from the NOPR (74 FR 61440), and details are available in chapter 8 of the TSD. In response to the NOPR, DOE did not receive any comments regarding customer discount rates.

7. Space-Constrained Applications and the After-Market

Comments at the NOPR public meeting (WEG, Emerson, and Regal-Beloit, Public Meeting Transcript, No. 20.4 at pp. 184–85, 191–92), and in written comments (NEMA, No. 24 at p. 19; DOJ, No. 29 at p. 2), expressed concerns regarding the challenges faced by users who purchase motors to replace existing motors within their applications. (This market is referred to as the "after-market.") In particular, these customers might face difficulty replacing motors in space-constrained applications with new motors of different size. Motors are sold to these customers through distributors or OEMs. DOE was unable to obtain data on the size and structure of the space-constrained portion of this market. However, DOE's motor lifetime function, which differentiates between motors retired due to mechanical failure and motors retired when the application in which they reside is retired, indicates that approximately 25-percent of small electric motors retire because of mechanical failure. Only users of these motors would be participants in the after-market, as other users replace their complete application rather than the motor alone. DOE has assumed that 20-percent of motor application are space-constrained, indicating that approximately 5-percent of motors are both space-constrained and retire due to mechanical failure—these users would participate in the after-market.

As discussed above in section IV.E, the NEMA survey reported on the fraction of motors purchased by OEMs that face space constraints inside their application. NEMA reported that 62 percent of the OEMs responding to the survey stated that any increase in size would negatively impact their ability to use the motor in their current applications, and that 33-percent stated that their applications could accept "only a slight increase" in size; only 5 percent stated that their application had few space constraints.

While DOE appreciates the information provided by NEMA, the agency has concerns regarding how well the sample represents total U.S. small motor shipments and possible survey response bias. In addition, as part of its written comments, NEMA has proposed alternative standards. These alternative standards appear to indicate that if nearly all OEMs face space constraints for motors in their products, it would be difficult for motor manufacturers to achieve the efficiency level called for in the NEMA standard levels without large cost increases. For these reasons, DOE has retained its assumption that 20-percent of the small motors are installed in applications that cannot accommodate any size increases.

OEMs that manufacture applications with space constraints on their motors have several options: (1) Redesign their application to accommodate a motor with a longer stack and/or a run capacitor; (2) purchase a stockpile of motors not covered by today's rule to install in future production of their application; (3) replace a less efficient

CSIR motor with a more efficient CSCR motor without increasing stack length; or (4) replace their motor with a motor not covered by today's rule. DOE estimates the likelihood and effect of each of these outcomes in its analysis of national impacts, by: Increasing the OEM baseline and incremental markups by 2 percent to either pay for redesign of their products to accommodate larger motors or purchase a stockpile of existing motors of the correct size; applying a model that estimates the migration from CSIR to CSCR motors, based on the relative difference in equipment and operating costs of the two types of motors and the assumed fraction that are space-constrained; and changing the assumption in the reference case regarding the elasticity of demand for small electric motors to a change in purchase price (from zero, or inelastic, to −0.25), thereby increasing the number of motors expected to migrate to totally enclosed motors not covered by today's rule. These assumptions result in nearly the entire CSIR market migrating to CSCR motors under the proposed standards, with net benefits to the average motor customer.

In response to this comment, DOE analyzed the impact of increasing the space-constrained fraction to 62 percent and to 95 percent of all motors in its sensitivity case (the additional 2-percent markup is not included in these two scenarios). These results are summarized in section VI below.

Emerson also pointed out that the OEMs whose products have space constraints are typically smaller companies that have a hard time re-engineering their product when changes in size occur. (Emerson, Public Meeting Transcript, No. 20.4 at pp. 83–85) DOE recognizes that smaller OEMs that manufacture products which cannot readily be altered to accommodate a larger motor may be adversely affected by today's rule. In analyzing the potential impact of today's standards on customers, DOE evaluated the impact on identifiable groups of end-use motor customers (*i.e.,* subgroups), such as small businesses, that may not be equally affected by a national standard level. The results of the subgroup analysis for small businesses can be found in section VI.C.1.b of this notice.

8. Standard Compliance Date

The date by which all small electric motor manufacturers must manufacture motors that satisfy the new standards announced in today's rule is statutorily-prescribed under EPCA. See 42 U.S.C. 6317(b). Therefore, the effective date of any new energy conservation standards for these products will be February 2015. DOE calculated the LCC for all end users assuming that each one would purchase a new piece of equipment in the year the standard takes effect.

*G. National Impact Analysis—National Energy Savings and Net Present Value Analysis*

1. General

DOE's National Impact Analysis (NIA) assesses the national energy savings, as well as the national Net Present Value (NPV) of total consumer costs and savings, expected to result from new standards at specific efficiency levels. DOE applied the NIA spreadsheet to perform calculations of energy savings and NPV, using the annual energy consumption and total installed cost data from the LCC analysis. DOE forecasted the energy savings, energy cost savings, equipment costs, and NPV for each equipment class from 2015 to 2045. The forecasts provide annual and cumulative values for all four parameters. In addition, DOE incorporated into its NIA spreadsheet the capability to analyze the sensitivity of the results to forecasted energy prices and equipment efficiency trends. Table IV.17 summarizes the approach and data DOE used to derive the inputs to the NES and NPV analyses for the NOPR. It also summarizes the changes DOE made in this analysis for today's final rule. These changes are described in the following sections, and more details are available in chapter 11 of the final rule TSD.

TABLE IV.17—APPROACH AND DATA USED TO DERIVE THE INPUTS TO THE NATIONAL ENERGY SAVINGS AND NPV ANALYSES

| Inputs | 2009 NOPR description | Changes for the final rule |
|---|---|---|
| Shipments | Annual shipments from Shipments Model. Shipments inelastic to changes in motor price. Two CSIR–CSCR cross-elasticity cases. | Updated shipments drivers to *AEO 2010* for reference case. Total shipments elasticity changed from 0 to −0.25. Single cross-elasticity case in which market shares are fixed beginning in 2015. |
| Space Constraints | Assumed 20% of motors in OEM applications face space constraints. | No change in reference case; analyzed 62% and 95% sensitivity cases. |
| Effective Date of Standard | 2015 | No change. |
| Base-Case Forecasted Efficiencies. | Efficiency distribution determined by the number of currently available models meeting the efficiency requirements of each TSL. | Efficiency distribution updated to reflect changes in engineering analysis, including the additional polyphase motor design |
| Standards-Case Forecasted Efficiencies. | Roll-up scenario. Efficiency distribution held constant over forecast period. | No change. |
| Annual Energy Consumption per Unit. | Annual weighted-average values as a function of efficiency distribution. | Updated to account for correlation between average energy use and motor age. |
| Total Installed Cost per Unit | Annual weighted-average values as a function of efficiency distribution. | No change. |
| Energy Cost per Unit | Annual weighted-average values a function of the annual energy consumption per unit and energy prices. | No change. |
| Repair Cost and Maintenance Cost per Unit. | None | No change. |
| Escalation of Energy Prices | Energy Prices: *AEO 2009* April Release forecasts for the Reference Case. *AEO 2009* April Release does not provide High-Price and Low-Price forecasts; used *AEO 2009* March Release High-Price and Low-Price forecasts to estimate high- and low-growth price trends. | Updated to *AEO 2010* Early Release forecasts for the Reference Case. High-Price and Low-Price forecasts created using ratios of *AEO 2009* March release High- and Low-Price forecasts to the *AEO 2009* March Reference Case. |

TABLE IV.17—APPROACH AND DATA USED TO DERIVE THE INPUTS TO THE NATIONAL ENERGY SAVINGS AND NPV ANALYSES—Continued

| Inputs | 2009 NOPR description | Changes for the final rule |
|---|---|---|
| Energy Site-to-Source Conversion. | Conversion varies yearly and is generated by DOE/EIA's NEMS program (a time-series conversion factor; includes electric generation, transmission, and distribution losses). | No change. |
| Effect of Standards on Energy Prices. | Determined but found not to be significant | No change. |
| Discount Rate | 3% and 7% real | No change. |
| Present Year | Future expenses discounted to year 2009 | Future expenses discounted to year 2010. |

2. Shipments

The shipments portion of the NIA spreadsheet is a shipments model based on macroeconomic drivers for small electric motor shipments. In the NOPR, DOE estimated that shipments to the industrial sector are proportional to the manufacturing output, shipments to the commercial sector are proportional to commercial floor-space, and shipments to the residential sector are proportional to the number of households. DOE used the *AEO 2009* April Release to forecast these three drivers. For today's final rule, DOE has updated the drivers in the reference case to the *AEO 2010* Early Release.

In the NOPR, DOE examined three alternate shipments scenarios. Two of these scenarios were based on the *AEO 2009* March Release High-Growth and Low-Growth cases, while the third was a "falling market share" case, in which forecast shipments remain constant at their 2008 levels independent of economic growth. The NEEA/NPCC commented that DOE should retain the falling market share case because of uncertainties regarding the size of the future demand for small motors covered by this rule, as well as the current economic climate. NEEA/NPCC added that DOE should give additional weight to this scenario when making its policy decision (NEEA, No. 27 at p. 10). These shipments scenarios are presented in Chapter 9 of the TSD.

In its analysis for the NOPR, DOE assumed that customers would not respond to standards by changing to enclosed motors, due to different ventilation requirements, and analyzed two different elasticities to enclosed motors, −0.25 and −0.5, as sensitivities. Several comments (Emerson, Public Meeting Transcript, No. 20.4 at pp. 176–77; NEEA/NPCC, No. 27 at pp. 5–6; NEMA, No. 24 at p. 19), pointed out that if, as a result of standards, open-construction motors become more expensive than enclosed motors, customers may choose to purchase enclosed motors. DOE's analysis indicates that enclosed small electric motors are, on average, 18-percent more expensive than open motors. For today's final rule, DOE has changed its reference scenario to the −0.25 elasticity scenario for both polyphase and capacitor-start motors. As a result, DOE estimates that, depending on the TSL selected, up to 12 percent of the capacitor-start motor market might migrate to enclosed motors; however, today's rule would result in a reduction of less than 1 percent for the capacitor-start motor market. DOE has retained the inelastic and −0.5 elasticity scenarios as sensitivities.

For the NOPR, DOE developed a cross-elasticity model to forecast the impact of standards on the relative market shares of CSIR and CSCR motors within each combination on motor horsepower and number of poles. DOE used this model to develop two reference cases for the NIA analysis. One case assumed that the market share shift described by the model would be complete by 2015, the date by which manufacturers must comply with the standard, while the other case arbitrarily assumed that the transition would begin in 2015 and be complete by 2025. At the December 17, 2009, Public Meeting, WEG Electric commented that their engineers had examined motor designs necessary to meet the CSIR and CSCR standard levels proposed in the NOPR. Their engineers concluded that motors meeting these efficiencies were manufacturable, but that the designs would include a run capacitor (making them all CSCR motors) that might present another issue for space constrained applications. (WEG, Public Meeting Transcript No. 20.4 at pp. 185–86)

When examining the cross-elasticity between CSIR and CSCR motors, DOE built a demand-based model that assumed that manufacturers would produce the products demanded by the modeled motor customer behavior. This model has significant uncertainty because of the difficulty in predicting the extent and timeframe of the market response to standards and an absence of data on changes in the small electric motor market. However, in view of WEG's comment, DOE has placed greater emphasis on the influence of decisions made by manufacturers on market share. In particular, in cases where DOE's model predicts that the market will result in a complete or nearly complete shift from CSIR to CSCR motors, DOE expects that the market share shift will take place prior to the introduction of standards in 2015 because manufacturers will change their production by that date. Therefore, for today's final rule, DOE has decided to use the scenario in which the market share shift is complete by 2015 as its single reference case for the shipments model.

NEMA disagreed with DOE's statement that the standard levels proposed in the NOPR would "maintain a supply of both categories of motors (CSIR and CSCR) in the single-phase motor market," especially since DOE was estimating that the purchase price of a CSIR motor would increase dramatically over that of the baseline motor. DOE wishes to clarify that the NOPR analysis predicted that nearly all, but not the entire, CSIR market would migrate to CSCR motors under the proposed standard level, TSL 7. DOE's elasticity model for capacitor-start motors incorporates both elasticity to products not covered by today's final rule (enclosed motors) and cross-elasticity between CSIR and CSCR motors. DOE expects that the open-construction CSIR motor market will migrate to open CSCR motors, rather than enclosed CSIR motors, because enclosed CSIR motors are only less expensive than open CSCR motors in the case of relatively inefficient enclosed CSIR motors.

Chapter 9 of the TSD describes the shipments and elasticity models and their results in detail.

3. Space Constraints

As discussed above in Section F, DOE retained its assumption that 20-percent

of the small motors are installed in applications that cannot accommodate any size increases. DOE has added 2-percent to the OEM markups in its reference case to account for estimated increases in OEM costs to redesign their products to accommodate larger, more efficient motors, or to purchase a stockpile of replacement motors of the correct size. In addition, in response to the survey results presented by NEMA, DOE has analyzed the impact of increasing the space-constrained fraction from 20 percent to 62 percent and to 95 percent of all motors in a pair of sensitivity case (the additional 2 percent markup is not included in these two scenarios). These sensitivity cases have little impact on the national impacts for capacitor-start motors because at the capacitor-start efficiency levels in today's rule, DOE estimates that 97 percent of the CSIR market will migrate to CSCR motors assuming only 20 percent of the market is space-constrained. Therefore, increasing the assumption of the fraction of space-constrained CSIR motors to 95-percent only affects the 3-percent of the CSIR market that had not already migrated to CSCR motors under DOE's reference case, and has little effect on the estimates of national energy savings. Appendices 9A and 10A of the TSD present the results of this and other sensitivity cases in more detail.

4. Base-Case and Standards-Case Efficiency Distributions

In its analysis for the NOPR, DOE developed base-case and standards-case efficiency distributions based on the distribution of currently available models for which motor catalogs list efficiency. In preparing today's final rule, DOE developed new scaling relationships governing the relationship between the efficiency of each product class to the efficiency of the representative product class for its motor category. These changes resulted in some motor models that met the criteria for one TSL in the NOPR analysis also meeting the criteria for a different TSL in the analysis for today's rule. The resulting base-case efficiency distributions are shown in Table IV.18 DOE's use of a roll-up method to determine the efficiency in the standards-cases is unchanged from the NOPR to the final rule analysis.

TABLE IV.18—BASE CASE EFFICIENCY MARKET SHARES BY MOTOR TYPE

| Motor type | | | | | | | | | |
|---|---|---|---|---|---|---|---|---|---|
| Base Case Market Share (%) by Efficiency Level | Baseline | EL 1 | EL 2 | EL 3 | EL 4 | EL 4b | EL 5 | EL 6 | EL 7 |
| Polyphase | 54 | 6 | 13 | 7 | 12 | 5 | 3 | 0 | 0 |
| | Baseline | EL 1 | EL 2 | EL 3 | EL 4 | EL 5 | EL 6 | EL 7 | EL 8 |
| CSIR | 40 | 30 | 13 | 15 | 2 | 0 | 0 | 0 | NA |
| CSCR | 37 | 33 | 4 | 11 | 11 | 0 | 4 | 0 | 0 |

5. Annual Energy Consumption per Unit

In the analysis conducted for the NOPR, DOE developed a model for motor lifetime that incorporates a correlation between annual hours of motor operation and the lifetime of the motor. This correlation was incorporated into the life-cycle cost analysis, which provides average energy use values for the NIA. In the analysis developed for today's final rule, DOE added a correction factor related to this correlation to its NIA model. This correction factor accounts for the higher removal rate of motors with higher annual energy usage levels when compared to motors with lower annual energy usage levels. This relationship is reflected in DOE's lifetime model.

*H. Customer Sub-Group Analysis*

For the NOPR and today's final rule, DOE analyzed the potential effects of small electric motor standards on two subgroups: (1) Customers with space-constrained applications, and (2) small businesses. For customers with space-constrained applications, DOE used the price and energy use estimates developed for space-constrained designs from the engineering analysis to conduct its life-cycle cost analysis. For small businesses, DOE analyzed the potential impacts of standards by conducting the analysis with different discount rates, because small businesses do not have the same access to capital as larger businesses. DOE estimated that for businesses purchasing small electric motors, the average discount rate for small companies is 4.2 percent higher than the industry average. Due to the higher costs of conducting business, as evidenced by their higher discount rates, the benefits of small electric motor standards for small businesses are estimated to be slightly lower than for the general population of small electric motor owners.

More details on the consumer subgroup analysis can be found in chapter 12 of the final rule TSD.

*I. Manufacturer Impact Analysis*

DOE conducted a manufacturer impact analysis (MIA) to estimate the financial impact of new energy conservation standards on small electric motors manufacturers, and to calculate the impact of such standards on domestic manufacturing employment and capacity. The MIA has both quantitative and qualitative aspects. The quantitative part of the MIA primarily relies on the GRIM—an industry-cash-flow model customized for this rulemaking. The GRIM inputs are data characterizing the industry cost structure, investments, shipments, and revenues. The key output is the industry net present value (INPV). Different sets of assumptions (scenarios) produce different results. The qualitative part of the MIA addresses factors such as equipment characteristics, market and equipment trends, as well as an assessment of the impacts of standards on subgroups of manufacturers. DOE outlined its methodology for the MIA in the NOPR. 74 FR 61442–46. The complete MIA for the NOPR is presented in chapter 12 of the NOPR TSD.

For today's final rule, DOE updated the MIA to reflect changes in the outputs of two other key DOE analyses, which feed into the GRIM. In the Engineering Analysis, DOE updated manufacturer production costs (MPCs) and inflated them to 2009$ from 2008$ using the producer price index (PPI). In the NIA, DOE updated its shipment forecasts and efficiency distributions. In turn, DOE updated the GRIM for these new estimates. DOE also inflated its capital and equipment conversion costs to 2009$ from 2008$ using the PPI for Motor and Generator Manufacturing (North American Industry Classification System (NAICS) 335312). Based on these changes, DOE used the GRIM to revise the MIA results from the NOPR.

For direct employment calculations, DOE revised the GRIM to include the U.S. Census information that was revised for 2007.

The following sections discuss interested parties comments on the NOPR MIA. In general, the format is as follows: DOE provides background on an issue that was raised by interested parties, summarizes the interested parties' comment, and discusses whether and how DOE modified its analysis in light of the comments.

1. Capital Conversion and Equipment Conversion Costs

For the NOPR, DOE estimated capital conversion costs for a typical manufacturer using estimates provided by manufacturers and information provided by industry experts. DOE estimated the tooling cost for each separate design at each incremental efficiency level. In addition to these capital expenditures, DOE also estimated equipment conversion expenses such as research and development, testing, and product literature development associated with new energy conservation standards. Because DOE did not receive specific feedback from all manufacturers in the industry, DOE then scaled these costs from a typical manufacturer to account for the entire industry where appropriate.

More specifically, DOE estimated the tooling costs for: (1) Total number of laminations over baseline designs; (2) grade of steel including the use of premium electrical steels; (3) increases in stack length; (4) necessary rewiring; (5) replacement of end rings; and (6) rotor redesigns to use copper (if applicable). For rotor redesigns to use copper, DOE estimated the costs to purchase new presses, new end rings, and additional tooling. For changes to the grade of steel, DOE estimated the costs for punch press dyes. For increases in stack length, DOE estimated the costs of switching more production equipment to accommodate a higher volume of larger sized small electric motors. For necessary rewiring, DOE estimates the cost of crimp tools. For replacement of end rings, DOE estimated the tooling changes for different dimensional changes to the end rings. For increases in laminations, DOE estimated the purchase of presses and tooling for winding machinery.

In written comments, NEMA stated that the capital conversion costs DOE assumed in the NOPR represent only 25- to 30-percent of the capital investments required by manufacturers at the proposed level for CSCR and CSIR. Specifically, NEMA argued that DOE did not account for progressive lam dies, new winding retooling, and other equipment conversion costs (*e.g.,* engineering time, and manufacture and customer agency approvals). (NEMA, No. 24 at p.18) Emerson and A.O. Smith added that such investments needed to reach the proposed standards could cause manufacturers to exit the small electric motors market. (Emerson, No. 28 at p. 1; A.O. Smith, No. 27 at p. 2)

As discussed above, in the NOPR and in today's final rule, DOE accounts for lam dies, new winding retooling and other capital investments at the TSLs that require such tooling. DOE also notes that equipment conversion costs associated with R&D, testing, and other non-capital expenses are included in its equipment conversion costs assumptions. However, in part because the proposed TSL did not require copper rotors or premium electric steel for the CSCR or polyphase markets, DOE cannot reconcile its investment totals at TSL 7 for CSCR and CSIR with the $150 million to $180 million range implied by NEMA's comment. However, in response to other comments, discussed immediately below, DOE has modified its approach to calculating the investments required of a typical manufacturer producing space constrained and non-space constrained motors.

In the NOPR, DOE examined the complete tooling requirements necessary for both space-constrained and non-space constrained designs. That is, DOE first calculated tooling costs assuming shipments were 100-percent space constrained, then calculated tooling costs assuming shipments were 100-percent non-space constrained. Next, DOE calculated the overall tooling costs by weighting these values by the fraction of shipments dedicated to space-constrained and non-space-constrained applications as forecast in the shipments model (20-percent and 80-percent, respectively).

Emerson and NEMA commented that the proposed TSLs require the use of different materials for electrical steel and rotors for different types of motors, which will lead to high capital costs. (Emerson, No. 28 at p. 1; NEMA, No. 24 at p. 18). Baldor Electric commented that manufacturers would lose economies of scope at the proposed TSLs because they would not be able to standardize along one type of steel for different classes of motors. Combined with the high capital costs, particularly for CSIR, this lack of standardization may lead manufacturers to choose to exit portions of the market. (Baldor Electric, Public Meeting Transcript, No. 20.4 at pp. 246–47; Emerson, Public Meeting Transcript, No. 20.4 at pp. 248)

For today's final rule, DOE modified its calculation of investments based on changes to the shipments forecasts related to the split between space-constrained and non-space constrained motors. For many manufacturers, it will not be possible to invest in tooling equipment for space constrained and non-space-constrained motors in a manner that is proportional to the relative market share of the two types of motors. Particularly given the uncertainty with regard to the future market demand and the resulting product mix, DOE believes it is more appropriate to look at the specific investment needs of a typical manufacturer at each TSL for both space constrained and non-space constrained investments for each motor design. For many design options, this leads to investments that are additive—not weighted by shipment share—across space-constrained and non-space constrained motors. Furthermore, DOE does not assume economies of scope in its assumptions regarding capital investments among the three classes of motors. That is, DOE assumed investment in each class independently and assumed they were additive when appropriate across the classes. To be clear, DOE is not modifying the shipments scenarios from the NIA in this scenario. It is modifying the capital investment assumptions to more completely capture the business decisions firms will likely have to make.

As mentioned in the comments referenced above, the business case for making the large capital investments required for certain types of motors becomes less compelling as shipment volumes decrease at higher TSLs (including the TSL established in today's final rule). DOE agrees with Emerson and A.O. Smith that some manufacturers are likely to exit this portion of their market, as is reflected by the shipments analysis, which shows a dramatic migration away from CSIR motors. For space-constrained motors within the CSIR class DOE projects no shipments after standards take effect. To capture this dynamic, at certain TSLs DOE calculated investments to include those associated with the CSCR line and the CSIR non-space constrained line. Without forecasting a significant volume of space-constrained CSIR shipments, it would be inappropriate to assume all manufacturers would invest in the premium electrical steel and copper technologies required to meet the standard level. For further details of the investments, see chapter 12 of the TSD and or section IV.I of today's notice.

In written comment, Emerson further argues that the exit of the market by certain manufacturers in response to amended standards would reduce competition and domestic employment. (Emerson, No. 28 at p. 1)

As previously discussed, DOE believes that some manufacturers could exit the small electric motors market segment covered by this rule in response to amended standards. However, it should be noted that covered small electric motors comprise only a small portion of overall motor sales for these companies. At the efficiency levels established by this final rule, DOE's analysis and manufacturer interviews indicated that the majority of manufacturers would likely remain in the small electric motors market following the implementation of amended standards. Additionally, DOE learned that a number of covered motors are already manufactured overseas and that foreign competition continues to make inroads into the covered motors segment. As for a potential reduction in domestic employment, DOE's analysis indicates that even with the potential departure by some manufacturers from segments of the small electric motors market, overall direct employment will remain relatively constant due to the increased labor content of more efficient motors.

2. Manufacturer Selling Prices

In the NOPR, DOE calculated weighted manufacturer selling prices (MSPs) based on a shipments split of 20-percent space-constrained and 80-percent non-space constrained motors. However, the shipments analysis in today's final rule models a mix of space-constrained and non-space constrained motors that varies by TSL. As such, DOE has updated its MSPs in the GRIM using the same shipment weights used in the shipments analysis at each TSL. For further information on the shipment analysis, see chapter 9 of the TSD.

3. Markup Scenarios

In the NOPR, DOE analyzed two markup scenarios in the MIA: the preservation-of-return-on-invested-capital scenario and the preservation-of-operating-profits scenario. These scenarios reflected the upper and lower bounds of industry profitability, respectively. In written comments, NEMA contended that DOE had inappropriately discounted the likelihood of the lower-bound scenario occurring when it stated its belief that design changes necessary for TSL 5 would not force all manufacturers to significantly redesign all of their polyphase small electric motors and production processes. (NEMA, No. 24 at p. 16)

In response, DOE first clarifies that it did not and is not assigning probabilities to the preservation of operating profit scenario or the preservation of return on invested capital scenario. The two markup scenarios are meant to estimate the range of potential impacts. Second, in the NOPR, and for this final rule, DOE accounted for equal investments in the GRIM under both the lower and upper bound profitability scenarios. Therefore, changes in markup assumptions—not changes in investments—drive the profitability difference between the scenarios. For example, in this final rule DOE assumes industry wide capital conversion investments for TSL 5 of approximately $7.1 million for polyphase small motors in each markup scenario. Thus, the likelihood of either scenario occurring with respect to the other is independent of the investment level assumed in the GRIM.

NEMA further argued that in discounting the likelihood of the lower-bound profitability scenario, DOE ignored cost increases and equipment investments associated with specialty steels and copper rotors necessary for polyphase motors to meet TSL 5. (NEMA, No. 24 at p. 16).

DOE disagrees with NEMA's suggestion that TSL 5 requires copper rotors and premium electrical steels (such as Hiperco) for polyphase motor designs. DOE continues to believe, as discussed in the Engineering Analysis, that both space-constrained and non-space constrained motors can achieve TSL 5 through the use of additional laminations. As discussed above, DOE included the attendant costs of the additional lams, steel-grade lam dies, end ring investment for both space constrained and non-space constrained motors, and a crimping tool. No investments for copper rotors design were assumed at TSL 5 for polyphase motors. NEMA ostensibly agreed that the proposed TSL did not require copper rotors when it commented that the "proposed standards for polyphase and CSCR small electric motors are based on the use of cast aluminum rotors." (NEMA, No. 24 at p. 18)

Baldor and NEMA stated that the proposed levels of efficiency in the NOPR are based on the assumption that manufacturers must use three different types of electrical steel including 24M19, 29M15, and Hiperco 50. According to NEMA, each type of electrical steel requires different methods for processing the rolled steel into laminations acceptable for use in electric motors. NEMA further adds that to remain competitive, manufacturers must minimize the number of different types of materials and processes used in a manufacturing facility and suggested that DOE adopt a standard level that is achievable with the same electrical steel for all motor categories. (Baldor, Public Meeting Transcript, No. 20.4 at pp. 246–47; NEMA, No. 24 at p. 17.

In the NOPR, DOE predicted that manufacturers would achieve the proposed efficiency levels with three types of steels including 24M19, 29M15, and Hiperco 50. During manufacturer interviews, DOE requested information on the type of processes needed to achieve each efficiency level, as well as the costs associated with each process. In regard to types of steel used and the cost of switching from one steel process to another, all interviewed manufacturers reported the use of additional lamination dies to accommodate the different thickness of steel. Accordingly, DOE included additional lamination dies per manufacturer in its estimates whenever a change of steel grade was applicable, as described in chapter 12 of the TSD. The cost per die was derived based on manufacturer's estimates and information provide by industry experts. See chapter 12 of the TSD for additional details on each type of investment at each efficiency level including all design options analyzed. DOE acknowledges that manufacturers in general, regardless of industry, reduce the number of manufacturing processes to lower costs and thus increase margins. For today's amended standards, DOE does not prescribe designs nor how manufacturers achieve each efficiency level. Because DOE accounts for all the relevant costs associated with using the various steel types in both the engineering analysis and MIA, it believes it accurately captures the potential costs to manufacturers in using different steel grades. Therefore, DOE believes that potential burden on manufacturers has been accounted for in today's final rule.

In response to the NOPR, NEMA commented that manufacturers are not aware of any other pathways to achieving the proposed efficiencies for space constrained CSIR motors but the ones analyzed in this rulemaking. NEMA argued that because there are no other pathways to achieving the proposed efficiencies, DOE is dictating that manufacturers use different electrical steels and different materials for the rotor construction in order to meet the proposed efficiencies for the three motor types. (NEMA, No. 24 at p. 16).

DOE acknowledges that TSL 7 reflects the max-tech efficiency levels for CSIR; as such, DOE estimates manufacturers may have to employ both copper rotors and premium electrical steels to achieve that level. In the engineering analysis, which subsequently carries over to the MIA, DOE models a pathway for space-constrained and non-space constrained application motors with the use of these technologies. However, in setting new standards for small electric motors, as described in today's notice, DOE selects efficiency levels for each motor category and does not prescribe designs.

4. Premium Electrical Steels

In response to the NOPR, Regal-Beloit and NEMA argue that DOE proposed an efficiency level for motors that would force manufacturers to utilize specific electrical steels that are in scarce supply. NEMA further argues that DOE should not establish standards that require manufacturers to use materials that are supply constrained. NEMA stated that a market analysis for the scarce materials is needed to prove otherwise. (Regal-Beloit, Public Meeting Transcript, No. 20.4 at pp. 245–46; NEMA, No. 24 at pp. 17–18). Similarly, NEMA asked DOE to consider any spillover effects on the supply of steel for medium electric motors. (NEMA, No. 24 at p.18)

DOE acknowledges the concern that Hiperco may be supply constrained in the short run should manufacturers pursue that design option. As such, to investigate these steel concerns, DOE contacted Hiperco 50 steel and other premium electrical steel suppliers and used steel manufacturer's annual reports to examine past shipment volumes of premium steels. DOE then compared estimated shipments of these steel to volumes that would be necessary for motors if should the base case mix of space constrained and non space constrained persist at all TSLs. Based on that analysis, DOE estimates that the entire small electric motor industry would need approximately 1.3 million pounds of premium steels (such as Hiperco) in 2015 for the level established by this rule. For the steel manufacturer that had available annual reports, the estimated pounds of premium steels needed by the motor manufacturers constitutes less than one percent of total steel shipments for 2008. How much of that volume reflects premium steels is not publically available. However, annual reports for the publicly traded manufacturer of premium steels suggest that shipments of these steels have decreased by close to 20 percent from the previous year, suggesting this manufacturer has over capacity and the ability to meet the possible increase in demand of premium steels. Given the time lag for the market to prepare for the compliance date of the standard and the low volumes of motors that may require premium steel, DOE believes that the proposed standard level will not threaten the supply of the steel, even if manufacturers decide to pursue this option. DOE's analysis does not forecast shipments of motors that require premium steel and, as a result, DOE does not believe that, based on the available data, there will be a significant impact ("spillover") on the medium motor market due to higher demand of the material in the small motor market.

NEMA stated that the proposed efficiency level mandates the use of copper rotor casting technology along with aluminum rotor casting technology in the same manufacturing facilities. NEMA argued that copper rotor casting technology is in its infancy and is not a fully developed process that can be adapted in all present facilities where small electric motors are built. Additionally, NEMA and A.O. Smith are concerned that copper rotor casting technology has significant safety issues related to the high temperatures needed for the process. According to NEMA, manufacturers may be required to use a few outside companies that may not have sufficient capacity to meet all of the copper rotor volume required to meet the needs for all of the CSIR small electric motors. Additionally, NEMA argues that standards must be based on the use of aluminum rotors only. (A.O. Smith, No. 26 at p. 2; NEMA, No. 24 at p. 18)

DOE acknowledges manufacturers' concerns related to the processes for die-casting copper rotors. In its analysis, DOE accounted for the increased capital requirements as they would likely occur depending on the efficiency level and motor type at issue. As stated in the NOPR, the use of copper rotors could lead manufacturers to outsource their die-casting processes, as indicated by NEMA in its comments. (74 FR 61467–68). Ultimately, this is a business decision. In its engineering analysis for this rulemaking, DOE included a copper rotor design at efficiency level 6 or above for polyphase motors, efficiency level 5 or above for CSIR motors, and efficiency level 4 or above for CSCR motors. The inclusion of copper rotor designs at each efficiency level varies depending on the necessary efficiency and space constraints. However, DOE reiterates that different manufacturers will not necessarily employ the same design options to make their motors achieve higher efficiency levels where DOE estimates copper rotors may be used, with the exception of the max-tech efficiency levels. In fact, for the NOPR and today's final rule, DOE has analyzed motors up to efficiency level 5 for CSIR motors and efficiency level 6 for CSCR motors that use an aluminum die-cast rotor.

*J. Employment Impact Analysis*

DOE considers employment impacts in the domestic economy as one factor in selecting a proposed standard. Employment impacts include direct and indirect impacts. Direct employment impacts are changes in the number of employees for manufacturers of equipment subject to standards, their suppliers, and related service firms. The MIA addresses these impacts.

Indirect employment impacts from standards consist of the net jobs created or eliminated in the national economy, other than in the manufacturing sector being regulated, due to: (1) Reduced spending by end users on energy (electricity, gas (including liquefied petroleum gas), and oil); (2) reduced spending on new energy supply by the utility industry; (3) increased spending on the purchase price of new equipment; and (4) the effects of those three factors throughout the economy. DOE expects the net monetary savings from standards to be redirected to other forms of economic activity. DOE also expects these shifts in spending and economic activity to affect the demand for labor in the short term, as explained below.

One method for assessing the possible effects on the demand for labor of such shifts in economic activity is to compare employment statistics in different economic sectors, which are compiled and published by the Bureau of Labor Statistics (BLS). The BLS regularly publishes its estimates of the number of jobs per million dollars of economic activity in different sectors of the economy, as well as the jobs created elsewhere in the economy by this same economic activity. Data from BLS indicate that expenditures in the utility sector generally create fewer jobs (both directly and indirectly) than expenditures in other sectors of the economy. There are many reasons for these differences, including wage differences and the fact that the utility sector is more capital intensive and less labor intensive than other sectors. (See Bureau of Economic Analysis, *Regional Multipliers: A User Handbook for the Regional Input-Output Modeling System* (RIMS II), Washington, DC, U.S. Department of Commerce, 1992.) Efficiency standards have the effect of reducing consumer utility bills. Because

reduced consumer expenditures for energy likely lead to increased expenditures in other sectors of the economy, the general effect of efficiency standards is to shift economic activity from a less labor-intensive sector (*i.e.,* the utility sector) to more labor-intensive sectors (*e.g.,* the retail and manufacturing sectors). Thus, based on the BLS data alone, DOE believes net national employment will increase due to shifts in economic activity resulting from standards for small electric motors.

In developing the NOPR, DOE estimated indirect national employment impacts using an input/output model of the U.S. economy called Impact of Sector Energy Technologies (ImSET).[16] ImSET is a special-purpose version of the "U.S. Benchmark National Input-Output" (I–O) model designed to estimate the national employment and income effects of energy-saving technologies. The ImSET software includes a computer-based I–O model with structural coefficients to characterize economic flows among 188 sectors most relevant to industrial, commercial, and residential building energy use. For today's final rule, DOE has made no change to its method for estimating employment impacts. For further details, see chapter 15 of the final rule TSD.

*K. Utility Impact Analysis*

The utility impact analysis estimates the change in the forecasted power generation capacity for the Nation that would be expected to result from adoption of new standards. For the NOPR and today's final rule, DOE calculated this change using the NEMS–BT computer model. NEMS–BT models certain policy scenarios such as the effect of reduced energy consumption by fuel type. The analysis output provides a forecast for the needed generation capacities at each TSL. While DOE was able to use the forecasts from the *AEO 2010* Early Release for energy prices and macroeconomic indicators, the NEMS–BT model corresponding to this case is not yet available. The estimated net benefit of the standard in today's final rule is the difference between the forecasted generation capacities by NEMS–BT and the *AEO 2009* April Release Reference Case. DOE obtained the energy savings inputs associated with efficiency improvements to small electric motors from the NIA. These inputs reflect the effects of both fuel (natural gas) and electricity consumption savings. Chapter 14 of the final rule TSD presents results of the utility impact analysis.

NEEA/NPCC claimed that only a small fraction of the total costs of avoided generation are currently counted in any rulemaking. They note that DOE uses the NEMS–BT model to calculate the avoided generation facilities produced by a standard and that the cost of construction and operation of these plants are rolled into average rates that all electricity consumers must pay, not just those purchasing the product in question. As a result, they believe that the NPV difference in the value of total electricity sales between the NEMS–BT forecasts with and without the standards may serve as a reasonable proxy for the economic value to all electricity consumers of the proposed standards. The difference value of total retail electricity sales is necessary to capture all of the cost of the avoided generation, since as noted above, users of small general purpose motors impacted by the standard will pay only a portion of those cost at embedded rates. (NEEA/NPPC, No. 27, p. 7–8)

DOE investigated the possibility of estimating the impact of specific standard levels on electricity prices in its rulemaking for general service fluorescent lamps and incandescent reflector lamps. (See U.S. Department of Energy—Office of Energy Efficiency and Renewable Energy: Energy Conservation Standards for General Service Fluorescent Lamps and Incandescent Reflector Lamps; Proposed Rule, 74 FR 16920, 16978–979 (April 13, 2009).) It concluded that caution is warranted in reporting impacts of appliance standards on electricity prices due to the complexity of the power industry (including the variety of utility regulation in the U.S.) and the relatively small impact of equipment efficiency standards on demand. In addition, electricity price reductions cannot be viewed as equivalent to societal benefits because part of the price reductions result from transfers from producers to consumers. The electric power industry is a complex mix of fuel suppliers, producers, and distributors. While the distribution of electricity is regulated everywhere, its institutional structure varies, and upstream components are complex. Because of the difficulty in accurately estimating electricity price impacts, and the uncertainty with respect to transfers from producers to consumers, DOE did not estimate the value of potentially reduced electricity costs for all consumers associated with standards for small electric motors.

*L. Environmental Assessment*

Pursuant to the National Environmental Policy Act of 1969 (NEPA) (42 U.S.C. 4321 *et seq.*) 42 U.S.C. 6295(o)(2)(B)(i)(VI), DOE prepared a draft environmental assessment (EA) of the potential impacts of the standards for small electric motors in today's final rule, which it has included as chapter 15 of the TSD. DOE found that the environmental effects associated with the standards for small electric motors were not significant. Therefore, DOE is issuing a Finding of No Significant Impact (FONSI), pursuant to NEPA, the regulations of the Council on Environmental Quality (40 CFR parts 1500–1508), and DOE's regulations for compliance with NEPA (10 CFR part 1021). The FONSI is available in the docket for this rulemaking.

In the EA, DOE estimated the reduction in power sector emissions of $CO_2$, $NO_X$, and Hg using the NEMS–BT computer model. In the EA, NEMS–BT is run similarly to the AEO NEMS, except that small electric motor energy use is reduced by the amount of energy saved (by fuel type) due to the TSLs. The inputs of national energy savings come from the NIA analysis; the output is the forecasted physical emissions. The estimated net benefit of the standard in today's final rule is the difference between the forecasted emissions by NEMS–BT at each TSL and the *AEO 2009* April Early Release Reference Case. NEMS–BT tracks $CO_2$ emissions using a detailed module that provides results with broad coverage of all sectors and inclusion of interactive effects.

DOE has determined that sulfur dioxide ($SO_2$) emissions from affected Electric Generating Units (EGUs) are subject to nationwide and regional emissions cap and trading programs that create uncertainty about the impact of energy conservation standards on $SO_2$ emissions. Title IV of the Clean Air Act sets an annual emissions cap on $SO_2$ for all affected EGUs. $SO_2$ emissions from 28 eastern States and the District of Columbia (D.C.) are also limited under the Clean Air Interstate Rule (CAIR, published in the **Federal Register** on May 12, 2005; 70 FR 25162 (May 12, 2005), which creates an allowance-based trading program that will gradually replace the Title IV program in those States and D.C. (The recent legal history surrounding CAIR is discussed below.) The attainment of the emissions caps is flexible among EGUs and is enforced through the use of emissions allowances and tradable permits. Energy conservation standards

[16] More information regarding ImSET is available online at: *http://www.pnl.gov/main/publications/external/technical_reports/PNNL-15273.pdf.*

could lead EGUs to trade allowances and increase $SO_2$ emissions that offset some or all $SO_2$ emissions reductions attributable to the standard. DOE is not certain that there will be reduced overall $SO_2$ emissions from the standards. The NEMS–BT modeling system that DOE uses to forecast emissions reductions currently indicates that no physical reductions in power sector emissions would occur for $SO_2$. The above considerations prevent DOE from estimating $SO_2$ reductions from standards at this time.

Even though DOE is not certain that there will be reduced overall emissions from the standard, there may be an economic benefit from reduced demand for $SO_2$ emission allowances. Electricity savings from standards decrease the generation of $SO_2$ emissions from power production, which can lessen the need to purchase emissions allowance credits, and thereby decrease the costs of complying with regulatory caps on emissions.

Much like $SO_2$ emissions, $NO_X$ emissions from 28 eastern States and the District of Columbia (D.C.) are limited under the CAIR. Although CAIR has been remanded to EPA by the U.S. Court of Appeals for the District of Columbia Circuit (D.C. Circuit), it will remain in effect until it is replaced by a rule consistent with the Court's July 11, 2008, opinion in *North Carolina* v. *EPA.* 531 F.3d 896 (D.C. Cir. 2008); see also *North Carolina* v. *EPA,* 550 F.3d 1176 (D.C. Cir. 2008). These court positions were taken into account in the analysis conducted for the NOPR and in today's final rule. Because all States covered by CAIR opted to reduce $NO_X$ emissions through participation in cap and trade programs for electric generating units, emissions from these sources are capped across the CAIR region.

In the 28 eastern States and D.C. where CAIR is in effect, DOE's forecasts indicate that no $NO_X$ emissions reductions will occur due to energy conservation standards because of the permanent cap. Energy conservation standards have the potential to produce an economic impact in the form of lower prices for $NO_X$ emissions allowances, if their impact on electricity demand is large enough. However, DOE has concluded that the standards in today's final rule will not have such an effect because the estimated reduction in electricity demand in States covered by the CAIR cap would be too small to affect allowance prices for $NO_X$ under the CAIR.

New or amended energy conservation standards would reduce $NO_X$ emissions in those 22 States that are not affected by the CAIR. DOE used the NEMS–BT to forecast emission reductions from the small electric motor standards in today's final rule.

Similar to emissions of $SO_2$ and $NO_X$, future emissions of Hg would have been subject to emissions caps. The Clean Air Mercury Rule (CAMR) would have permanently capped emissions of mercury from new and existing coal-fired plants in all States beginning in 2010 (70 FR 28606). However, the CAMR was vacated by the D.C. Circuit in its decision in *New Jersey* v. *Environmental Protection Agency,* 517 F 3d 574 (D.C. Cir. 2008) Thus, DOE was able to use the NEMS–BT model to estimate the changes in Hg emissions resulting from the proposed rule.

NEMA noted that the TSD for the NOPR provides a qualitative assessment of upstream emissions (*i.e.,* emissions from energy losses during coal and natural gas production) in addition to quantifying the emissions at power plants. NEMA states that if DOE is making an assessment of upstream emissions, it should also account for the emissions related to the construction of more efficient small electric motors, such as those related to the mining of additional raw materials, processing of the additional materials, transportation of the additional materials, and the manufacture of the motor itself. (NEMA, No. 24 at p. 22)

As noted in the TSD for the NOPR, DOE developed qualitative estimates of affects on upstream fuel-cycle emissions because NEMS–BT does a thorough accounting only of emissions at the power plant due to downstream energy consumption. In other words, NEMS–BT does not account for upstream emissions. Therefore, the Environmental Assessment for today's final rule reports only power plant emissions.

When setting performance standards for industrial equipment, EPCA prescribes that an energy efficiency standard be a minimum level of energy efficiency or maximum allowable energy use. EPCA defines the term "energy use" within this limited context for commercial and industrial equipment as being the quantity of energy directly consumed by an article of industrial equipment at the point of use. See 42 U.S.C. 6311(4). In ascertaining the appropriate level of efficiency, DOE must balance seven criteria to develop a standard that is economically justified and technically feasible. While DOE believes that the majority of the energy and other costs associated with the manufacturing of more efficient motors are reflected in its analysis, some of the costs associated with certain environmental impacts and other externalities are not incorporated. Even though DOE estimates and considers the impacts of standards on the energy and emissions associated with electricity generation, it does not specifically assess the energy and emissions associated with the manufacturing of more efficient motors or the manufacturing of the equipment required to produce and supply energy. The main reason for not assessing such indirect costs and benefits is the absence of a reliable and comprehensive method of doing so. Such an assessment would require accounting for a variety of variables, including the energy required to build and service the energy production, generation, and transmission infrastructure needed to deliver the energy, as well as accounting for the energy expended to manufacture energy-using equipment.

*M. Monetizing Carbon Dioxide and Other Emissions Impacts*

As part of the development of this final rule, DOE considered the estimated monetary benefits likely to result from the reduced emissions of $CO_2$ and other pollutants that are expected to result from each of the Trial Standard Levels considered. This section summarizes the basis for the estimated monetary values used for each of these emissions and presents the benefits estimates considered.

For today's final rule, DOE is relying on a new set of values for the social cost of carbon SCC that were recently developed by an interagency process. A summary of the basis for these new values is provided below, and a more detailed description of the methodologies used is provided as an Annex to Chapter 15 of the Technical Support Document.

1. Social Cost of Carbon

Under Executive Order 12866, agencies are required, to the extent permitted by law, "to assess both the costs and the benefits of the intended regulation and, recognizing that some costs and benefits are difficult to quantify, propose or adopt a regulation only upon a reasoned determination that the benefits of the intended regulation justify its costs." The purpose of the SCC estimates presented here is to allow agencies to incorporate the social benefits of reducing $CO_2$ emissions into cost-benefit analyses of regulatory actions that have small, or "marginal," impacts on cumulative global emissions. The estimates are presented with an acknowledgement of the many uncertainties involved and with a clear understanding that they should be updated over time to reflect

increasing knowledge of the science and economics of climate impacts.

The SCC is an estimate of the monetized damages associated with an incremental increase in carbon emissions in a given year. It is intended to include (but is not limited to) changes in net agricultural productivity, human health, property damages from increased flood risk, and the value of ecosystem services due to climate change.

As part of the interagency process that developed these SCC estimates, technical experts from numerous agencies met on a regular basis to consider public comments, explore the technical literature in relevant fields, and discuss key model inputs and assumptions. The main objective of this process was to develop a range of SCC values using a defensible set of input assumptions grounded in the existing scientific and economic literatures. In this way, key uncertainties and model differences transparently and consistently inform the range of SCC estimates used in the rulemaking process.

The interagency group selected four SCC values for use in regulatory analyses. Three values are based on the average SCC from three integrated assessment models, at discount rates of 2.5, 3, and 5 percent. The fourth value, which represents the 95th percentile SCC estimate across all three models at a 3 percent discount rate, is included to represent higher-than-expected impacts from temperature change further out in the tails of the SCC distribution.

TABLE IV.19—SOCIAL COST OF $CO_2$, 2010–2050

[In 2007 dollars]

| Discount year | 5% Avg | 3% Avg | 2.5% Avg | 3% 95th |
|---|---|---|---|---|
| 2010 | 4.7 | 21.4 | 35.1 | 64.9 |
| 2015 | 5.7 | 23.8 | 38.4 | 72.8 |
| 2020 | 6.8 | 26.3 | 41.7 | 80.7 |
| 2025 | 8.2 | 29.6 | 45.9 | 90.4 |
| 2030 | 9.7 | 32.8 | 50.0 | 100.0 |
| 2035 | 11.2 | 36.0 | 54.2 | 109.7 |
| 2040 | 12.7 | 39.2 | 58.4 | 119.3 |
| 2045 | 14.2 | 42.1 | 61.7 | 127.8 |
| 2050 | 15.7 | 44.9 | 65.0 | 136.2 |

a. Monetizing Carbon Dioxide Emissions

The "social cost of carbon" (SCC) is an estimate of the monetized damages associated with an incremental increase in carbon emissions in a given year. It is intended to include (but is not limited to) changes in net agricultural productivity, human health, property damages from increased flood risk, and the value of ecosystem services. Estimates of the social cost of carbon are provided in dollars per metric ton of carbon dioxide.[17]

When attempting to assess the incremental economic impacts of carbon dioxide emissions, the analyst faces a number of serious challenges. A recent report from the National Academies of Science (*Hidden Costs of Energy: Unpriced Consequences of Energy Production and Use.* National Academies Press. 2009) points out that any assessment will suffer from uncertainty, speculation, and lack of information about (1) future emissions of greenhouse gases, (2) the effects of past and future emissions on the climate system, (3) the impact of changes in climate on the physical and biological environment, and (4) the translation of these environmental impacts into economic damages. As a result, any effort to quantify and monetize the harms associated with climate change will raise serious questions of science, economics, and ethics and should be viewed as provisional.

Despite the serious limits of both quantification and monetization, SCC estimates can be useful in estimating the social benefits of reducing carbon dioxide emissions. Under Executive Order 12866, agencies are required, to the extent permitted by law, "to assess both the costs and the benefits of the intended regulation and, recognizing that some costs and benefits are difficult to quantify, propose or adopt a regulation only upon a reasoned determination that the benefits of the intended regulation justify its costs." The purpose of the SCC estimates presented here is to make it possible for agencies to incorporate the social benefits from reducing carbon dioxide emissions into cost-benefit analyses of regulatory actions that have small, or "marginal," impacts on cumulative global emissions. Most Federal regulatory actions can be expected to have marginal impacts on global emissions.

For such policies, the benefits from reduced (or costs from increased) emissions in any future year can be estimated by multiplying the change in emissions in that year by the SCC value appropriate for that year. The net present value of the benefits can then be calculated by multiplying each of these future benefits by an appropriate discount factor and summing across all affected years. This approach assumes that the marginal damages from increased emissions are constant for small departures from the baseline emissions path, an approximation that is reasonable for policies that have effects on emissions that are small relative to cumulative global carbon dioxide emissions. For policies that have a large (non-marginal) impact on global cumulative emissions, there is a separate question of whether the SCC is an appropriate tool for calculating the benefits of reduced emissions; we do not attempt to answer that question here.

An interagency group convened on a regular basis to consider public comments, explore the technical literature in relevant fields, and discuss key inputs and assumptions in order to generate SCC estimates. Agencies that actively participated in the interagency process include the Environmental Protection Agency, and the Departments of Agriculture, Commerce, Energy, Transportation, and Treasury. This process was convened by the Council of Economic Advisers and the Office of Management and Budget, with active participation and regular input from the Council on Environmental Quality,

[17] In this document, DOE presents all values of the SCC as the cost per metric ton of $CO_2$ emissions. Alternatively, one could report the SCC as the cost per metric ton of carbon emissions. The multiplier for translating between mass of $CO_2$ and the mass of carbon is 3.67 (the molecular weight of $CO_2$ divided by the molecular weight of carbon = 44/12 = 3.67).

National Economic Council, Office of Energy and Climate Change, and Office of Science and Technology Policy. The main objective of this process was to develop a range of SCC values using a defensible set of input assumptions that are grounded in the existing literature. In this way, key uncertainties and model differences can more transparently and consistently inform the range of SCC estimates used in the rulemaking process.

The interagency group selected four SCC estimates for use in regulatory analyses. For 2010, these estimates are $5, $21, $35, and $65 (in 2007 dollars). The first three estimates are based on the average SCC across models and socio-economic and emissions scenarios at the 5, 3, and 2.5 percent discount rates, respectively. The fourth value is included to represent the higher-than-expected impacts from temperature change further out in the tails of the SCC distribution. For this purpose, we use the SCC value for the 95th percentile at a 3 percent discount rate. The central value is the average SCC across models at the 3 percent discount rate. For purposes of capturing the uncertainties involved in regulatory impact analysis, we emphasize the importance and value of considering the full range. These SCC estimates also grow over time. For instance, the central value increases to $24 per ton of $CO_2$ in 2015 and $26 per ton of $CO_2$ in 2020. See Appendix A of the Annex to Chapter 15 of the Technical Support Document for the full range of annual SCC estimates from 2010 to 2050.

It is important to emphasize that the interagency process is committed to updating these estimates as the science and economic understanding of climate change and its impacts on society improve over time. Specifically, we have set a preliminary goal of revisiting the SCC values within two years or at such time as substantially updated models become available, and to continue to support research in this area. In the meantime, we will continue to explore the issues raised by this analysis and consider public comments as part of the ongoing interagency process.

b. Social Cost of Carbon Values Used in Past Regulatory Analyses

To date, economic analyses for Federal regulations have used a wide range of values to estimate the benefits associated with reducing carbon dioxide emissions. In the final model year 2011 CAFE rule, the Department of Transportation (DOT) used both a "domestic" SCC value of $2 per ton of $CO_2$ and a "global" SCC value of $33 per ton of $CO_2$ for 2007 emission reductions (in 2007 dollars), increasing both values at 2.4 percent per year. It also included a sensitivity analysis at $80 per ton of $CO_2$. A domestic SCC value is meant to reflect the value of damages in the United States resulting from a unit change in carbon dioxide emissions, while a global SCC value is meant to reflect the value of damages worldwide.

A 2008 regulation proposed by DOT assumed a domestic SCC value of $7 per ton $CO_2$ (in 2006 dollars) for 2011 emission reductions (with a range of $0–$14 for sensitivity analysis), also increasing at 2.4 percent per year. A regulation finalized by DOE in October of 2008 used a domestic SCC range of $0 to $20 per ton $CO_2$ for 2007 emission reductions (in 2007 dollars). In addition, EPA's 2008 Advance Notice of Proposed Rulemaking for Greenhouse Gases identified what it described as "very preliminary" SCC estimates subject to revision. EPA's global mean values were $68 and $40 per ton $CO_2$ for discount rates of approximately 2 percent and 3 percent, respectively (in 2006 dollars for 2007 emissions).

In 2009, an interagency process was initiated to offer a preliminary assessment of how best to quantify the benefits from reducing carbon dioxide emissions. To ensure consistency in how benefits are evaluated across agencies, the Administration sought to develop a transparent and defensible method, specifically designed for the rulemaking process, to quantify avoided climate change damages from reduced $CO_2$ emissions. The interagency group did not undertake any original analysis. Instead, it combined SCC estimates from the existing literature to use as interim values until a more comprehensive analysis could be conducted.

The outcome of the preliminary assessment by the interagency group was a set of five interim values: global SCC estimates for 2007 (in 2006 dollars) of $55, $33, $19, $10, and $5 per ton of $CO_2$. The $33 and $5 values represented model-weighted means of the published estimates produced from the most recently available versions of three integrated assessment models—DICE, PAGE, and FUND—at approximately 3 and 5 percent discount rates. The $55 and $10 values were derived by adjusting the published estimates for uncertainty in the discount rate (using factors developed by Newell and Pizer (2003)) at 3 and 5 percent discount rates, respectively. The $19 value was chosen as a central value between the $5 and $33 per ton estimates. All of these values were assumed to increase at 3 percent annually to represent growth in incremental damages over time as the magnitude of climate change increases.

These interim values represent the first sustained interagency effort within the U.S. government to develop an SCC for use in regulatory analysis. The results of this preliminary effort were presented in several proposed and final rules and were offered for public comment in connection with proposed rules, including the joint EPA–DOT fuel economy and $CO_2$ tailpipe emission proposed rules.

c. Approach and Key Assumptions

Since the release of the interim values, the interagency group reconvened on a regular basis to generate improved SCC estimates considered for this final rule. Specifically, the group considered public comments and further explored the technical literature in relevant fields.

It is important to recognize that a number of key uncertainties remain, and that current SCC estimates should be treated as provisional and revisable since they will evolve with improved scientific and economic understanding. The interagency group also recognizes that the existing models are imperfect and incomplete. The National Academy of Science (2009) points out that there is tension between the goal of producing quantified estimates of the economic damages from an incremental ton of carbon and the limits of existing efforts to model these effects. There are a number of concerns and problems that should be addressed by the research community, including research programs housed in many of the agencies participating in the interagency process to estimate the SCC.

The U.S. Government will periodically review and reconsider estimates of the SCC used for cost-benefit analyses to reflect increasing knowledge of the science and economics of climate impacts, as well as improvements in modeling. In this context, statements recognizing the limitations of the analysis and calling for further research take on exceptional significance. The interagency group offers the new SCC values with all due humility about the uncertainties embedded in them and with a sincere promise to continue work to improve them.

In summary, in considering the potential global benefits resulting from reduced $CO_2$ emissions, DOE used the most recent values identified by the interagency process, adjusted to 2009$ using the standard GDP deflator values for 2008 and 2009. For each of the four cases specified, the values for emissions

in 2010 used were approximately $5, $22, $36, and $67 per metric ton avoided (values expressed in 2009$). To monetize the $CO_2$ emissions reductions expected to result from amended standards for small electric motors in 2015–2045, DOE used the values identified in Table A1 of the "Social Cost of Carbon for Regulatory Impact Analysis Under Executive Order 12866," which is reprinted as an Annex to Chapter 15 of the Technical Support Document, appropriately escalated to 2009$.

2. Monetary Values of Non-Carbon Emissions

As previously stated, DOE's analysis assumed the presence of nationwide emission caps on $SO_2$ and caps on $NO_X$ emissions in the 28 States covered by CAIR. In the presence of these caps, the NEMS–BT modeling system that DOE used to forecast emissions reduction indicated that no physical reductions in power sector emissions would occur (although there remains uncertainty about whether physical reduction of $SO_2$ will occur), but that the standards could put slight downward pressure on the prices of emissions allowances in cap-and-trade markets. Estimating this effect is very difficult because factors such as credit banking can change the trajectory of prices. From its modeling to date, DOE is unable to estimate a benefit from energy conservation standards on the prices of emissions allowances at this time. See the environmental assessment in the final rule TSD for further details.

DOE also investigated the potential monetary benefit of reduced $NO_X$ and Hg emissions from the TSLs it considered. As noted above, new or amended energy conservation standards would reduce $NO_X$ emissions in those 22 States that are not affected by CAIR, in addition to the reduction in site $NO_X$ emissions nationwide. DOE estimated the monetized value of $NO_X$ emissions reductions resulting from each of the TSLs considered for today's final rule based on environmental damage estimates from the literature. Available estimates suggest a very wide range of monetary values for $NO_X$ emissions, ranging from $370 per ton to $3,800 per ton of $NO_X$ from stationary sources, measured in 2001$ (equivalent to a range of $447 to $4,591 per ton in 2009$). Refer to the OMB, Office of Information and Regulatory Affairs, "2006 Report to Congress on the Costs and Benefits of Federal Regulations and Unfunded Mandates on State, Local, and Tribal Entities," Washington, DC, for additional information.

For Hg emissions reductions, DOE estimated the national monetized values resulting from the TSLs considered for today's rule based on environmental damage estimates from the literature. The impact of mercury emissions from power plants on humans is considered highly uncertain. However, DOE identified two estimates of the environmental damage of Hg based on estimates of the adverse impact of childhood exposure to methyl mercury on IQ for American children, and subsequent loss of lifetime economic productivity resulting from these IQ losses. The high-end estimate of $1.3 billion per year in 2000$ (which works out to $33.7 million per ton emitted per year in 2009$) is based on an estimate of the current aggregate cost of the loss of IQ in American children that results from exposure to Hg of U.S. power plant origin.[18] DOE's low-end estimate of $0.66 million per ton emitted in 2004$ ($0.764 million per ton in 2008$) was derived from an evaluation of mercury control that used different methods and assumptions from the first study, but was also based on the present value of the lifetime earnings of children exposed to Hg.[19]

## V. Discussion of Other Comments

Since DOE opened the docket for this rulemaking, it has received more than 20 comments from a diverse set of parties, including manufacturers and their representatives, States, energy conservation advocates, and electric utilities. Section IV of this preamble discusses comments DOE received on the analytical methodologies it has used in this rulemaking. Additional comments DOE received in response to the NOPR addressed the information DOE used in its analyses, results of and inferences drawn from the analyses, impacts of standards, the merits of the different TSLs and standards options DOE considered, other issues affecting adoption of standards for small electric motors, and the DOE rulemaking process. DOE addresses these comments below.

A. Trial Standard Levels

In selecting the proposed energy conservation standards for both classes of small electric motors for consideration in today's final rule, DOE started by examining the standard levels with the highest energy savings, and determined whether those levels were economically justified. If DOE found those levels not to be justified, DOE considered TSLs sequentially lower in energy savings until it reached the level with the greatest energy savings that was both technologically feasible and economically justified. In the NOPR document, DOE proposed TSL 5 for polyphase motors and TSL 7 for single-phase motors.

Emerson commented that while it is in favor of efficiency standards in general, it is not in favor of the proposed standards for small electric motors. This is because it diverts a manufacturer's attention and funding away from other energy efficient technologies that it is developing, which are actually being used to replace these covered motors. In its written comments, Emerson asked that DOE not regulate small electric motors. (Emerson, Public Meeting Transcript, No. 20.4 at pp. 267–69; Emerson, No. 28 at p. 3) Underwriters Laboratories (UL) submitted written comments stating that over the past five years the majority of fractional horsepower motors it has seen have been electronically commutated motors (ECM), which reach efficiency levels in the high 90 percent range. However, UL continued on to state that DOE should not set efficiency levels for the covered motors that reinforce the status quo, but rather encourage greater efficiency, which it states the proposed standard levels would not achieve. (UL, No. 21 at pp. 1–2) QM Power added that high standards would cause alternative technologies to be sold in higher volumes and as a result bring their relative prices down. (QM Power, Public Meeting Transcript, No. 20.4 at pp. 290–91) Finally, a joint comment submitted by PG&E, SCE, SCGC, and SDGE indicated support for the standard levels chosen by DOE in the NOPR phase. (Joint Comment, No. 23 at p. 2)

DOE notes that it is legally required to issue standards for small electric motors and reiterates that it selects the standard level with the highest energy savings that is both technologically feasible and economically justified. The standards set in today's final rule represent the efficiency level with the greatest energy savings that is both technologically feasible and economically justified. While other classes of motors, such as electronically commutated motors (ECMs) may offer higher efficiency levels than the levels selected by DOE in today's rulemaking,

[18] Trasande, L., *et al.*, "Applying Cost Analyses to Drive Policy that Protects Children," 1076 Ann. N.Y. Acad. Sci. 911 (2006).

[19] Ted Gayer and Robert Hahn, "Designing Environmental Policy: Lessons from the Regulation of Mercury Emissions," Regulatory Analysis 05–01, AEI-Brookings Joint Center for Regulatory Studies, Washington, DC (2004). A version of this paper was published in the *Journal of Regulatory Economics* in 2006. The estimate was derived by back-calculating the annual benefits per ton from the net present value of benefits reported in the study.

DOE must consider and evaluate the covered motors when selecting efficiency levels.

NEMA commented that a statement in the NOPR indicated that the proposed polyphase standard was closely aligned with the EPACT 1992 efficiency levels. NEMA was confused by this statement because the levels proposed in the NOPR were greater than the EPACT 1992 levels. (NEMA, No. 24 at p. 22) NEMA also stated that the NOPR indicates "TSL 7 corresponds to the NEMA Premium equivalent efficiency for CSCR motors," (74 FR 61469) but that there is no defined level of NEMA Premium efficiency for any ¾-horsepower, four-pole motor. (NEMA, No. 24 at p. 24)

DOE would like to clarify these statements. In the NOPR, DOE stated "DOE proposes a standard for polyphase small motors * * * that is closely aligned with the EPACT 1992 standard for medium motors." 74 FR 61419–20. This text should have read that DOE proposed efficiency levels (TSL 5) for polyphase small electric motors are closely aligned with the NEMA Premium efficiency levels for 1-horsepower, four-pole medium electric motors. This statement was restated and asserted at other times throughout the NOPR document and DOE regrets any confusion it may have caused.

In this final rule, due to revisions in the baseline efficiencies, modeling of higher efficiency motor designs, and scaling analysis, TSL 4b now most closely aligns with NEMA Premium efficiency levels (and medium electric motor standards) for motors greater than 1 horsepower. DOE recognizes the value to manufacturers of having a single efficiency requirement for similar models of motors. Because some efficiency values associated with TSL 4b are slightly higher than the NEMA Premium efficiency requirements, DOE is reducing these values to harmonize with NEMA Premium efficiency. DOE does not anticipate that this reduction will result in a significant loss of energy savings. For this reason, DOE is implementing this change after conducting its analyses and in the final stage of standard-setting. For further detail on the polyphase efficiencies analyzed for TSL 4b, see chapter 5 of the TSD.

DOE also understands that NEMA Premium levels exist neither for any ¾-horsepower, four-pole motors nor single-phase. DOE drew this comparison to NEMA Premium because manufacturers had recommended, during the preliminary analysis, that DOE examine such a standard level for its CSCR motor with the aforementioned ratings, and the manufacturers used that terminology when providing their recommendations to DOE.

In addition, Regal-Beloit and A.O. Smith commented that a CSCR motor should be able to generate a higher efficiency level than a comparable CSIR motor, but pointed out that DOE's NOPR proposed efficiency levels would require CSIR motors to have higher efficiencies than corresponding CSCR motors. (Regal-Beloit, Public Meeting Transcript, No. 20.4 at pp. 107–08; A.O. Smith, Public Meeting Transcript, No. 20.4 at p. 108) NEMA also questioned the validity of DOE's scaling analysis, citing the fact that the proposed CSIR levels were in fact slightly higher than the proposed CSCR levels. (NEMA, No. 24 at pp. 9–10) They added that though DOE indicated that the proposed efficiency levels for CSIR and CSCR were the same, they were not exactly equivalent. (NEMA, No. 24 at pp. 25–26)

DOE would like to clarify that it was not alleging that CSCR motors cannot be as efficient as CSIR motors. DOE is aware that CSCR motors are inherently more efficient than CSIR motors, as indicated by the NOPR and final rule's max-tech efficiency levels for these two types of motors. DOE had proposed a standard level where the pairing of efficiency standards for both motor categories were approximately equivalent. DOE analyzed several TSLs for single-phase motors, some of which result in higher minimum efficiency requirements for CSCR motors than CSIR motors. However, as discussed in section VI.D, TSL 7, which adopt levels for CSIR and CSCR that are approximately equivalent, has been determined to the level that achieves the maximum energy savings, while being technologically feasible and economically justified.

In consideration of the comments received regarding the exact equivalence of the CSIR and CSCR levels, DOE believes it appropriate to harmonize the levels of the two categories of motors for the standard selected in today's final rule. Because the TSL 7 represents the maximum technologically feasible level for CSIR motors, DOE has opted to lower these levels to equal the CSCR standard levels for TSL 7. DOE does not expect that this shift in CSIR motor efficiency will have a significant impact on the comparative economics or energy savings of the varying TSLs, and thus will not change the decision of which TSL to adopt. For this reason, DOE has decided to apply this efficiency shift at the standard-setting phase of the analyses. For further detail on the CSIR efficiencies analyzed for TSL 7, see chapter 5 of the TSD.

*B. Enforcement*

Thus far in the rulemaking process, DOE has not laid out any plans for the enforcement of efficiency standards for small electric motors. Typically, efficiency standard rulemakings do not outline a plan for enforcement, which occurs independently from the rulemaking process.

DOE received a number of comments pertaining to the enforcement of today's final rule and what steps DOE will take to enforce these efficiency standards. Regal-Beloit, A.O. Smith, and WEG all expressed the concern that some manufacturers, most notably from overseas, may not comply with the standards, and they wished to see a plan for how these standards would be enforced. (Regal-Beloit, Public Meeting Transcript, No. 20.4 at pp. 182–83; A.O. Smith, No. 26 at p. 3; WEG, Public Meeting Transcript, No. 20.4 at pp. 261–66) A joint comment submitted by PG&E, SCE, SCGC, and SDGE also stressed the importance of developing a plan for enforcement. (Joint Comment, No. 23 at p. 2) Emerson agreed with the joint commenters that a lack of enforcement would put the domestic manufacturers who comply with today's standard at a disadvantage in the marketplace because they would incur the costs necessary to increase efficiency. (Joint Comment, No. 23 at p. 2; Emerson, No. 28 at p. 2)

Additionally, DOE received comments offering suggestions for how to improve the enforcement of today's rule. Both Regal-Beloit commented that DOE should require a marking on the motor to indicate that it complies with the efficiency standard, such as is done with NEMA Premium motors. (Regal-Beloit, Public Meeting Transcript, No. 20.4 at pp. 229–30) Regal-Beloit also suggested that DOE perform some sort of audit of the motors on the market to ensure compliance with today's rule. (Regal-Beloit, Public Meeting Transcript, No. 20.4 at p. 230) Finally, Earthjustice requested that today's final rule outline a specific date on which DOE will layout plans for enforcement of the small electric motors standards. (Earthjustice, Public Meeting Transcript, No. 20.4 at pp. 20–21)

NEMA's written comment reiterated these concerns about enforcement, and outlined several steps DOE should take to ensure proper compliance. First, it recommended that DOE expand its present Compliance Certification number system that is used for electric motors to include small electric motors. Second, it recommended a means to

notify DOE of potential violations. Third, it suggested maintaining a Web site that lists manufacturers and OEMs who have submitted compliance certificates. Fourth, it supported penalties for repeat violations of the law. Finally, it stressed the importance of securing the appropriate funds for implementing and maintaining an enforcement program. (NEMA, No. 24 at pp. 26–27) NEEA and NPCC also commented on the importance of appropriating funds for enforcement of today's standards. (NEEA/NPCC, No. 27 at p. 7)

Additionally, NEMA's written comment indicated that DOE must publish the small electric motors SNOPR soon in order for manufacturers to have sufficient time to ensure compliance with today's standards. (NEMA, No. 24 at p. 25)

DOE agrees that the plans for enforcing today's final rule are very important, and appreciates the suggestions provided by manufacturers. While it is uncommon for a standard rulemaking to address issues of enforcement, DOE would like to highlight its intention to outline concrete steps for enforcing today's efficiency standards. Given the numerous rulemakings that the agency must promulgate pursuant to its court consent decree and statutory requirements, DOE plans to issue this supplemental notice as expeditiously as possible to invite comment from interested parties and to ensure that the motor industry has sufficient time to adjust to any new provisions that DOE proposes.

*C. Nominal Full-Load Efficiency*

As discussed in section IV.C.2 of today's final rule, it is common in the motor industry to observe variation in motor performance for a population of motors of identical designs, including tested efficiency. This variation can be due to variations in material quality, manufacturing processes, and even testing equipment. NEMA has established the term "nominal full-load efficiency" and uses the term for medium electric motors customers with a guaranteed efficiency given the variations in motor manufacturing and testing. As the tolerances due to manufacturing and testing variations guaranteed by NEMA's definition of nominal full load efficiency are based on test procedures and data for medium electric motors, DOE elected to alter the definition in its NOPR and as it pertains to small electric motors. In the NOPR, DOE defined the term nominal full-load efficiency as the arithmetic mean of the full load efficiency of a population of motors of duplicate design.

At the NOPR public meeting, Baldor made several comments regarding DOE's proposed definition for "nominal full-load efficiency" pertaining to small electric motors. First, Baldor commented that the proposed definition was too similar to the existing definition for "average full-load efficiency," and that it differed from the definition in NEMA MG–1, which would create confusion for users. (Baldor, Public Meeting Transcript, No. 20.4 at pp. 112, 126–27) Next, Baldor commented that the proposed definition provided no stipulation for what constitutes a population of motors, and suggested that the term be clarified. (Baldor, Public Meeting Transcript, No. 20.4 at pp. 112–13) These two comments were reiterated by NEMA in its written comments. (NEMA, No. 24 at pp. 10–16) Finally, Baldor commented that the proposed definition infers that the arithmetic mean of the full-load efficiencies of the population of motors is known and that the nominal full-load efficiency must be specified to be equal to the arithmetic mean, which would provide no limit to the number of different values of efficiency that might be marked on nameplates. As such, Baldor requested further clarification on the determination of any relationship between nominal full-load efficiency and calculated efficiency. (Baldor, Public Meeting Transcript, No. 20.4 at pp. 114, 125)

Additionally, Baldor recommended improvements to DOE's usage of nominal full-load efficiency. Baldor stated that the standard levels set by DOE should follow a pattern similar to the one already established in Table 12–6(a), which provides a logical sequence of numbers, and is familiar to motor users. (Baldor, Public Meeting Transcript, No. 20.4 at pp. 129–31) Baldor also pointed out that DOE is able to use the nominal values in Table 12–6(a) without using the minimum values, which are just provided for user information but not for compliance. (Baldor, Public Meeting Transcript, No. 20.4 at pp. 142–43) Again, NEMA supported these statements in its written comments. (NEMA, No. 24 at p. 14) Finally, Baldor and NEMA stated that DOE does not need to establish energy conservation standards in terms of nominal efficiency, but rather identify the characteristic of the efficiency value assigned to a motor to which a value in the table applies. (Baldor, Public Meeting Transcript, No. 20.4 at pp. 134–35; NEMA, No. 24 at pp. 15–16)

DOE considered all of these comments when it established energy conservation standards for small electric motors in today's final rule. DOE agrees with NEMA and Baldor that its energy efficiency standards are not mandated to be in terms of nominal full-load efficiency. Instead, DOE believes that nominal efficiency is an issue more related to certifying compliance. Therefore, DOE has elected to establish energy conservation standards in terms of average full-load efficiency. DOE will address comments related to nominal efficiency and propose provisions for certifying compliance with small electric motor energy efficiency standards in its supplemental test procedure NOPR for electric motors.

## VI. Analytical Results and Conclusions

*A. Trial Standard Levels*

DOE examined eight TSLs for polyphase small electric motors and eight for capacitor-start small motors. Table VI.1 and Table VI.2 present the TSLs and the corresponding efficiencies for the three representative product classes analyzed for today's final rule. TSL 8 is the max-tech efficiency level for the polyphase motors, and TSL 7 is the max-tech level for the capacitor-start motors.

TABLE VI.1—TRIAL STANDARD LEVELS FOR POLYPHASE SMALL ELECTRIC MOTORS *

| | Polyphase four-pole 1-horsepower % |
|---|---|
| TSL 1 | 77.3 |
| TSL 2 | 78.3 |
| TSL 3 | 80.5 |
| TSL 4 | 81.1 |
| TSL 4b | 83.5 |
| TSL 5 | 85.2 |
| TSL 6 | 86.2 |
| TSL 7 | 87.7 |

* Standard levels are expressed in terms of full-load efficiency.

DOE's polyphase TSLs represent the increasing efficiency of the range of motors DOE modeled in its engineering analysis. DOE incorporated one additional TSL since the NOPR, which is the new TSL 4b. This TSL approximately aligns with the efficiency values proposed by NEMA in their written comments.

TSLs 1, 2, and 3 represent incremental improvements in efficiency as a result of increasing the stack height and the slot fill percentage. TSL 4 represents the efficiency level possible by increasing stack height by 20 percent while maintaining the baseline steel

grade and an aluminum rotor. TSL 4b approximately aligns with the efficiency levels proposed by NEMA in its written comment, and for the representative product class is comparable to the efficiency of a three-digit frame series medium electric motor that meets the efficiency requirements of EPCA. TSL 5 represents the highest efficiency value for a space-constrained design before switching to a copper rotor. TSL 6 represents a level at which DOE has reached the 20 percent limit of increased stack height, increased grades of steel and included a copper die-cast rotor. Also, TSL 6 is comparable to the efficiency standard of a three-digit frame series medium electric motor that meets the NEMA Premium level, which Congress has set as an energy conservation standard for medium motors through section 313(b) of EISA 2007. At TSL 7, the max-tech efficiency level, for the restricted designs DOE has reached the design limit using the maximum increase in stack height of 20 percent and increased grades of steel. At this level, DOE has also implemented a premium steel type (Hiperco 50), a copper die-cast rotor, a maximum slot fill percentage of nearly 65 percent. For the lesser space-constrained design, DOE has decreased the stack height from the design used at TSL 6. This design incorporates a copper rotor while reaching the design limitation maximum slot fill percentage.

TABLE VI.2—TRIAL STANDARD LEVELS FOR CAPACITOR-START SMALL ELECTRIC MOTORS*

| | Capacitor-start, induction-run 4-pole 0.50 horsepower motors (%) | Capacitor-start, capacitor-run 4-pole 0.75 horsepower motors (%) |
|---|---|---|
| TSL 1 ..... | 70.5 (EL 4) | 79.5 (EL 2) |
| TSL 2 ..... | 70.5 (EL 4) | 81.7 (EL 3) |
| TSL 3 ..... | 71.8 (EL 5) | 81.7 (EL 3) |
| TSL 4 ..... | 73.1 (EL 6) | 82.8 (EL 4) |
| TSL 5 ..... | 73.1 (EL 6) | 81.7 (EL 3) |
| TSL 6 ..... | 77.6 (EL 7) | 87.9 (EL 8) |
| TSL 7 ..... | 77.6 (EL 7) | 81.7 (EL 3) |
| TSL 8 ..... | 77.6 (EL 7) | 86.7 (EL 7) |

* Standard levels are expressed in terms of full-load efficiency.

Each TSL for capacitor-start small motors consists of a combination of efficiency levels for induction-run and capacitor-run motors. CSIR and CSCR motors are used in similar applications and generally can be used interchangeably provided the applications are not bound by strict space constraints and will allow the presence of a second capacitor housing of the motor. DOE believes that the standards set by today's rule will impact the relative market share of CSIR and CSCR motors for general-purpose single-phase applications by changing the upfront cost of motors as well as their estimated losses. Section IV.G of this final rule and chapter 9 of the TSD describe DOE's model of this market dynamic.

DOE developed seven possible efficiency levels for CSIR motors and eight possible efficiency levels for CSCR motors. Rather than present all possible combinations of these efficiency levels, DOE chose a representative set of 8 TSLs that span the range from low energy savings to the maximum national energy savings. Because of the interaction between the CSIR and CSCR market share, there is no simple relationship between the combination of efficiency levels and the resulting energy savings. DOE's capacitor-start cross-elasticity model was used to evaluate the impacts of each TSL on motor shipments in each product class. The model predicts that TSLs 1 through 5 result in relatively minor changes in product class market shares, while TSLs 6, 7, and 8 result in more significant changes. Uncertainties in the cross-elasticity model, and in the timescale of market share response to standards, lead to greater uncertainty in the national impacts of TSLs 6, 7, and 8, than with TSLs 1 through 5. A summary of results for all combinations of CSIR and CSCR efficiency levels is presented in chapter 10 of the TSD.

TSL 1 is a combination consisting of the fourth efficiency level analyzed for CSIR motors and the second efficiency level for CSCR motors. This TSL uses similar engineering design options for both CSIR and CSCR motors and corresponds to an efficiency level roughly equivalent to the standards levels recommend for 42/48-frame-size CSIR motors and 56-frame size CSCR motors by NEMA. TSL 2 increases the efficiency level of the CSCR motor to the third efficiency level, which corresponds to the minimum life-cycle cost. The efficiency level for the CSIR motor remains the same as in TSL 1. TSL 3 raises the CSIR efficiency level, which DOE's model meets by implementing a copper die-cast rotor, increasing slot fill, and reaching the 20 percent limit on increased stack height, or by doubling the original stack height and increasing slot fill. However, the CSCR efficiency level remains at the minimum LCC.

TSLs 4 and 5 both show the same efficiency level for CSIR motors, but different efficiency levels for CSCR motors. To obtain the efficiency level for CSIR motors, DOE had to use either a copper rotor in combination with a thinner and higher grade of steel and a stack increase of 20 percent, or only a higher grade of steel with a stack exceeding a 20-percent increase but no longer than a 100-percent increase. The 82.2-percent efficiency level for CSCR motors in TSL 5 corresponds again to the same design and efficiency level for TSL 2 and 3. To achieve the 83.2-percent efficiency level for CSCR motors in TSL 4, DOE created designs with a 20-percent increase in stack height and a higher grade of steel or used a copper rotor with a stack height above a 20-percent increase. TSL 4 represents the combination of the highest CSIR and CSCR levels that have more customers who benefit than customers who do not according to DOE's LCC analysis. TSL 5 increases energy savings relative to TSL 4 because DOE anticipates there will be a greater CSCR market share, and the CSCR efficiency level again corresponds with the minimum LCC.

TSL 6 represents max-tech efficiency levels for CSIR and CSCR motors, as determined by DOE's engineering analysis; at this level CSCR motors are very expensive relative to CSIR motors, and DOE forecasts a nearly complete market shift to CSIR motors. TSLs 7 and 8 represent cases in which CSIR motors are, on average, very expensive relative to CSCR motors as a result of standards, and DOE forecasts near-to-complete market shifts to CSCR motors in both of its reference scenarios. Because CSCR motors are more efficient at these levels, national energy savings are increased beyond that of the max-tech efficiency level, TSL 6. TSL 7 pairs the max-tech efficiency requirements for CSIR motors with the minimum LCC efficiency level for CSCR motors, while TSL 8 pairs max-tech CSIR efficiency requirements with the second-highest CSCR motor efficiency level that DOE analyzed. The ordering of TSLs 5, 6, 7, and 8, with respect to energy savings is robust in the face of uncertainties in the inputs to, and the parameters of, DOE's cross-elasticity model.

*B. Significance of Energy Savings*

To estimate the energy savings through year 2045 from potential standards, DOE compared the energy consumption attributable to small electric motors under the base case (no new standards) to energy consumption attributable to this equipment under each standards case (each TSL that DOE has considered). Table VI.3 and Table VI.4 show DOE's national energy savings estimates, which are based on the *AEO 2010* Early Release, for each TSL for polyphase and capacitor-start

small electric motors, respectively. Chapter 10 of the TSD describes these estimates in more detail. DOE reports both undiscounted and discounted values of energy savings. Discounted energy savings represent a policy perspective where energy savings farther in the future are less significant than energy savings closer to the present.

Estimating the energy savings due to revised and new energy efficiency standards required DOE to compare the energy consumption of small electric motors under the base case to energy consumption of these products under the trial standard levels. As described in section IV.G DOE used scaling relations for energy use and equipment price to extend its average energy use and price for representative product classes (analyzed in the LCC analysis) to all product classes, and then developed shipment-weighted sums to estimate the national energy savings. As described in section IV.G, DOE conducted separate national impact analyses for polyphase and capacitor-start (single-phase) motors. Efficiency standards for CSIR and CSCR motors are reflected in the capacitor-start energy savings and NPV results, which account for the interchangeability of CSIR and CSCR motors in many applications.

Table VI.3 and Table VI.4 show the forecasted national energy savings through year 2045 at each of the TSLs. The tables also show the magnitude of the energy savings if the savings are discounted at rates of seven and three percent. The energy savings (undiscounted) from implementing standards for polyphase small electric motors range from 0.05 to 0.37 quad and the savings for capacitor-start small electric motors range from 1.18 to 2.33 quads.

TABLE VI.3—SUMMARY OF CUMULATIVE NATIONAL ENERGY SAVINGS FOR POLYPHASE SMALL ELECTRIC MOTORS

[Energy savings between 2015 and 2045]

| Trial standard level | National energy savings (quads) | | |
|---|---|---|---|
| | Not discounted | Discounted at 3% | Discounted at 7% |
| 1 | 0.05 | 0.03 | 0.01 |
| 2 | 0.09 | 0.05 | 0.02 |
| 3 | 0.17 | 0.09 | 0.04 |
| 4 | 0.19 | 0.10 | 0.05 |
| 4b | 0.29 | 0.15 | 0.07 |
| 5 | 0.34 | 0.18 | 0.09 |
| 6 | 0.37 | 0.19 | 0.09 |
| 7 | 0.37 | 0.20 | 0.09 |

TABLE VI.4—SUMMARY OF CUMULATIVE NATIONAL ENERGY SAVINGS FOR CAPACITOR-START SMALL ELECTRIC MOTORS

[Energy savings between 2015 and 2045]

| Trial standard level | National energy savings (quads) | | |
|---|---|---|---|
| | Not discounted | Discounted at 3% | Discounted at 7% |
| 1 | 1.18 | 0.63 | 0.31 |
| 2 | 1.19 | 0.64 | 0.31 |
| 3 | 1.36 | 0.73 | 0.36 |
| 4 | 1.47 | 0.79 | 0.39 |
| 5 | 1.47 | 0.79 | 0.39 |
| 6 | 1.61 | 0.87 | 0.43 |
| 7 | 1.91 | 1.03 | 0.51 |
| 8 | 2.33 | 1.25 | 0.62 |

DOE conducted a wide range of sensitivity analyses, including scenarios demonstrating the effects of variation in shipments, response of customers to higher motor prices, the cost of electricity due to a carbon cap and trade regime, reactive power costs, and (for capacitor-start motors) the dynamics of CSIR/CSCR consumer choice. These scenarios show a range of possible outcomes from projected energy conservation standards, and illustrate the sensitivity of these results to different input and modeling assumptions. In general, however, they do not dramatically change the relationship between results at one TSL with those at another TSL and the relative economic savings and energy savings of different TSLs remain roughly the same. The estimated overall magnitude of savings, however, can change substantially, which can be due to a change in the estimated total number of small electric motors in use. Details of each scenario are available in chapter 10 of the TSD and its appendices, along with the national energy savings estimated for each scenario.

Customers currently appear to favor CSIR motors over CSCR motors, even if their initial costs and losses are almost identical. DOE's market-share model includes an "unfamiliarity cost" parameter that attempts to account for this observed behavior. For the shipments sensitivity analysis, DOE analyzed the total energy savings from capacitor-start motors when this unfamiliarity cost is significantly lower (high CSCR model) or higher (low CSCR model) than DOE's reference case. These scenarios can have a significant impact on the relative energy savings in different TSLs. Table VI.5 shows the results for the national energy savings (through year 2045) in these scenarios.

TABLE VI.5—UNDISCOUNTED CUMULATIVE NATIONAL ENERGY SAVINGS FOR CAPACITOR-START SMALL ELECTRIC MOTORS UNDER DIFFERENT CSIR/CSCR MARKET SHARE SCENARIOS

[Energy savings between years 2015 and 2045]

| Trial standard level | National energy savings quads | | |
|---|---|---|---|
| | Low CSCR scenario | Reference scenario | High CSCR scenario |
| 1 | 1.17 | 1.18 | 1.30 |
| 2 | 1.17 | 1.19 | 1.38 |
| 3 | 1.34 | 1.36 | 1.52 |
| 4 | 1.43 | 1.47 | 1.67 |
| 5 | 1.43 | 1.47 | 1.65 |
| 6 | 1.61 | 1.61 | 1.62 |
| 7 | 1.87 | 1.91 | 1.92 |
| 8 | 2.17 | 2.33 | 2.37 |

*C. Economic Justification*

In examining the potential for energy savings for small electric motors, DOE analyzed whether standards would be economically justified. As part of this examination, a variety of elements were examined. These elements are based on the various criteria specified in EPCA. See generally, 42 U.S.C. 6295.

1. Economic Impact on Motor Customers

DOE analyzed the economic impacts on small electric motor customers by looking at the effects standards would have on the LCC, PBP, and on various subgroups. DOE also examined the effects of the rebuttable presumption payback period set out in 42 U.S.C. 6295. All of these analyses are discussed below.

a. Life-Cycle Costs and Payback Period

Customers of equipment affected by new or amended standards usually experience higher purchase prices and lower operating costs. Generally, these impacts are best captured by changes in life-cycle costs. Therefore, DOE calculated the LCC and PBP for the standards levels considered in this proceeding. DOE's LCC and PBP analyses provided five key outputs for each TSL, which are reported in Table VI.6 through Table VI.8 below. The first three outputs are the proportion of small motor purchases where the purchase of a design that complies with the TSL would create a net life-cycle cost, no impact, or a net life-cycle savings for the consumer. The fourth output is the average net life-cycle savings from the purchase of a complying design.

Finally, the fifth output is the average PBP for the consumer purchase of a design that complies with the TSL. The PBP is the number of years it would take for the customer to recover, as a result of energy savings, the increased costs of higher-efficiency equipment, based on the operating cost savings from the first year of ownership. The payback period is an economic benefit-cost measure that uses benefits and costs without discounting. DOE's PBP analysis and its analysis under the rebuttable presumption test both address the payback period for a standard. DOE based its estimates of the average PBPs for small electric motors on energy consumption under conditions of actual use of these motors and also analyzed the amount of energy consumption for purposes of the rebuttable presumption calculations using the conditions prescribed by the DOE test procedure. See 42 U.S.C. 6295(o)(2)(B)(iii). Moreover, as discussed above, while DOE examined the rebuttable-presumption criteria (see TSD section VI.C.1.d), it determined today's standard levels to be economically justified through a more detailed analysis of the economic impacts of increased efficiency pursuant to section 325(o)(2)(B)(i) of EPCA. (42 U.S.C. 6295(o)(2)(B)(i)) Detailed information on the LCC and PBP analyses can be found in TSD Chapter 8.

DOE analyzed the life-cycle cost for three representative motors, as shown in Table VI.6 through Table VI.8. A Monte Carlo simulation was performed to incorporate uncertainty and variability into the analysis. A random sample of 10,000 motors was drawn from the distributions of current national shipments by motor type, application, owner type, operating hours, and other inputs, using Crystal Ball, a commercially available software program. The model calculated the LCC and PBP for equipment at each efficiency level for each of the 10,000 motors sampled. For a 1-horsepower polyphase motor, customers experience net LCC savings, on average, through efficiency level 4b. Efficiency level 3 has the minimum average life-cycle cost. For a ½-horsepower CSIR motor, customers experience net LCC savings, on average, through efficiency level 6. CSIR efficiency level 4 has the minimum average life-cycle cost. For a ¾-horsepower CSCR motor, customers experience net LCC savings, on average, through efficiency level 5. CSCR efficiency level 3 has the greatest average life-cycle cost savings. The average payback periods in the tables are substantially longer than the median payback periods because a fraction of customers run their motors very few hours per year. This results in extraordinarily long payback periods for this fraction of customers and results in average payback periods that far exceed the median payback period. DOE believes that the median payback period represents the anticipated experience of the typical customer more accurately than the average payback period.

TABLE VI.6—POLYPHASE SMALL ELECTRIC MOTORS: LIFE-CYCLE COST AND PAYBACK PERIOD RESULTS FOR A ONE HORSEPOWER MOTOR

| Energy efficiency level | Efficiency % | Life-cycle cost | | | | Life-cycle cost savings | | | Payback period years | |
|---|---|---|---|---|---|---|---|---|---|---|
| | | Average installed price $ | Average annual energy use kWh | Average annual operating cost $ | Average life-cycle cost $ | Average savings $ | Customers with | | Average | Median |
| | | | | | | | Net cost % | Net benefit % | | |
| Baseline | 74.0 | 517 | 1,892 | 130 | 1,268 | ..... | ..... | ..... | ..... | ..... |
| 1 | 76.1 | 530 | 1,729 | 127 | 1,261 | 8 | 46.8 | 53.2 | 21.8 | 7.1 |
| 2 | 77.7 | 537 | 1,686 | 123 | 1,249 | 19 | 41.3 | 58.7 | 17.8 | 5.8 |
| 3 | 79.4 | 549 | 1,630 | 119 | 1,237 | 31 | 40.6 | 59.4 | 17.7 | 5.6 |
| 4 | 80.1 | 558 | 1,615 | 118 | 1,240 | 29 | 45.1 | 54.9 | 20.4 | 6.5 |
| 4b | 82.6 | 589 | 1,540 | 113 | 1,240 | 28 | 51.2 | 48.8 | 24.8 | 7.8 |
| 5 | 84.4 | 655 | 1,508 | 110 | 1,291 | −23 | 65.8 | 34.3 | 41.5 | 12.4 |
| 6 | 85.3 | 711 | 1,488 | 109 | 1,339 | −71 | 77.4 | 22.6 | 54.2 | 16.9 |
| 7 | 87.0 | 1,477 | 1,462 | 107 | 2,095 | −827 | 96.8 | 3.2 | 243.0 | 51.1 |

TABLE VI.7—CAPACITOR-START INDUCTION-RUN MOTORS: LIFE-CYCLE COST AND PAYBACK PERIOD RESULTS FOR A ONE-HALF HORSEPOWER MOTOR

| Energy efficiency level | Efficiency % | Life-cycle cost | | | | Life-cycle cost savings | | | Payback period years | |
|---|---|---|---|---|---|---|---|---|---|---|
| | | Average installed price $ | Average annual energy use kWh | Average annual operating cost $ | Average life-cycle cost $ | Average savings $ | Customers with | | Average | Median |
| | | | | | | | Net cost % | Net benefit % | | |
| Baseline | 59.0 | 494 | 1,250 | 91 | 915 | ..... | ..... | ..... | ..... | ..... |
| 1 | 62.2 | 502 | 1,170 | 85 | 896 | 19 | 27 | 73 | 8.6 | 2.7 |
| 2 | 64.5 | 508 | 1,116 | 81 | 884 | 31 | 28 | 72 | 8.8 | 2.8 |
| 3 | 66.7 | 511 | 1,064 | 77 | 869 | 46 | 24 | 76 | 7.5 | 2.3 |
| 4 | 71.5 | 529 | 976 | 71 | 857 | 58 | 32 | 68 | 10.5 | 3.2 |
| 5 | 72.7 | 549 | 951 | 69 | 868 | 47 | 42 | 58 | 15.1 | 4.7 |
| 6 | 74.0 | 593 | 920 | 67 | 902 | 13 | 55 | 45 | 24.9 | 7.2 |
| 7 | 78.4 | 996 | 860 | 63 | 1,285 | −369 | 66 | 34 | 108.2 | 12.4 |

TABLE VI.8—CAPACITOR-START CAPACITOR-RUN MOTORS: LIFE-CYCLE COST AND PAYBACK PERIOD RESULTS FOR A THREE-QUARTER HORSEPOWER MOTOR

| Energy efficiency level | Efficiency % | Life-cycle cost | | | | Life-cycle cost savings | | | Payback period years | |
|---|---|---|---|---|---|---|---|---|---|---|
| | | Average installed price $ | Average annual energy use kWh | Average annual operating cost $ | Average life-cycle cost $ | Average savings $ | Customers with | | Average | Median |
| | | | | | | | Net cost % | Net benefit % | | |
| Baseline | 72.0 | 548 | 1,425 | 104 | 1,026 | ..... | ..... | ..... | ..... | ..... |
| 1 | 75.7 | 559 | 1,360 | 99 | 1,014 | 12 | 36 | 64 | 13.4 | 4.3 |
| 2 | 80.0 | 587 | 1,250 | 91 | 1,005 | 21 | 46 | 54 | 18.5 | 5.8 |
| 3 | 82.2 | 599 | 1,205 | 88 | 1,002 | 24 | 48 | 52 | 19.1 | 5.9 |
| 4 | 83.2 | 612 | 1,214 | 88 | 1,015 | 11 | 55 | 45 | 24.4 | 7.8 |
| 5 | 84.5 | 630 | 1,201 | 88 | 1,029 | −3 | 62 | 38 | 29.5 | 9.4 |
| 6 | 85.2 | 670 | 1,179 | 86 | 1,062 | −36 | 70 | 30 | 40.3 | 11.8 |
| 7 | 87.1 | 697 | 1,146 | 84 | 1,078 | −52 | 75 | 25 | 43.5 | 13.1 |
| 8 | 88.4 | 1,485 | 1,115 | 81 | 1,856 | −830 | 99 | 1 | 250.0 | 49.0 |

DOE analyzed the average life-cycle cost for a shipment-weighted distribution of product classes, as shown in Table VI.9, Table VI.10 and Table VI.11. The results in these tables account for motors of different horsepower and pole configuration from the three representative motors shown in Table VI.6 through Table VI.8.

TABLE VI.9—POLYPHASE MOTORS: LIFE-CYCLE COST AND PAYBACK PERIOD RESULTS FOR A SHIPMENT-WEIGHTED PRODUCT CLASS DISTRIBUTION

| Energy efficiency level | Efficiency % | Life-cycle cost | | | | Life-cycle cost savings | | | Payback period years | |
|---|---|---|---|---|---|---|---|---|---|---|
| | | Average installed price $ | Average annual energy use kWh | Average annual operating cost $ | Average life-cycle cost $ | Average savings $ | Customers with | | Average | Median |
| | | | | | | | Net cost % | Net benefit % | | |
| Baseline | 78.8 | 515 | 1934 | 139.52 | 1,323 | ..... | ..... | ..... | ..... | ..... |
| 1 | 80.6 | 528 | 1883 | 135.85 | 1,314 | 9 | 44.7 | 55.3 | 21.1 | 6.6 |
| 2 | 82.0 | 535 | 1836 | 132.45 | 1,302 | 22 | 39.2 | 60.8 | 17.2 | 5.3 |
| 3 | 83.4 | 547 | 1775 | 128.07 | 1,287 | 36 | 38.7 | 61.3 | 17.1 | 5.2 |

TABLE VI.9—POLYPHASE MOTORS: LIFE-CYCLE COST AND PAYBACK PERIOD RESULTS FOR A SHIPMENT-WEIGHTED PRODUCT CLASS DISTRIBUTION—Continued

| Energy efficiency level | Efficiency % | Life-cycle cost | | | | Life-cycle cost savings | | | Payback period years | |
|---|---|---|---|---|---|---|---|---|---|---|
| | | Average installed price $ | Average annual energy use kWh | Average annual operating cost $ | Average life-cycle cost $ | Average savings $ | Customers with | | Average | Median |
| | | | | | | | Net cost % | Net benefit % | | |
| 4 | 84.0 | 556 | 1759 | 126.91 | 1,289 | 34 | 42.7 | 57.3 | 19.6 | 6.0 |
| 4b | 86.1 | 587 | 1678 | 121.06 | 1,288 | 36 | 49.2 | 50.8 | 23.9 | 7.3 |
| 5 | 87.6 | 651 | 1643 | 118.52 | 1,337 | −13 | 63.2 | 36.8 | 39.1 | 11.5 |
| 6 | 88.4 | 707 | 1622 | 116.99 | 1,383 | −60 | 74.8 | 25.2 | 51.8 | 15.7 |
| 7 | 89.7 | 1,465 | 1594 | 114.96 | 2,131 | −808 | 96.2 | 3.8 | 220.4 | 47.8 |

TABLE VI.10—CAPACITOR-START INDUCTION-RUN MOTORS: LIFE-CYCLE COST AND PAYBACK PERIOD RESULTS FOR A SHIPMENT-WEIGHTED PRODUCT CLASS DISTRIBUTION

| Energy efficiency level | Average efficiency % | Life-cycle cost | | | | Life-cycle cost savings | | | Payback period years | |
|---|---|---|---|---|---|---|---|---|---|---|
| | | Average installed price $ | Average annual energy use kWh | Average annual operating cost $ | Average life-cycle cost $ | Average savings $ | Customers with | | Average | Median |
| | | | | | | | Net cost % | Net benefit % | | |
| Baseline | 49.9 | 496 | 1265 | 92.12 | 920 | ..... | ..... | ..... | ..... | ..... |
| 1 | 53.2 | 504 | 1182 | 86.03 | 900 | 20 | 26.9 | 73.1 | 8.5 | 2.5 |
| 2 | 55.7 | 510 | 1125 | 81.89 | 888 | 33 | 27.7 | 72.3 | 8.7 | 2.6 |
| 3 | 58.1 | 513 | 1071 | 77.96 | 871 | 49 | 24.0 | 76.0 | 7.4 | 2.2 |
| 4 | 63.5 | 531 | 979 | 71.28 | 859 | 62 | 30.7 | 69.3 | 10.4 | 3.1 |
| 5 | 64.8 | 551 | 953 | 69.40 | 870 | 51 | 40.2 | 59.8 | 14.9 | 4.5 |
| 6 | 66.3 | 595 | 920 | 67.00 | 903 | 17 | 54.1 | 45.9 | 24.5 | 7.0 |
| 7 | 71.5 | 1,000 | 858 | 62.48 | 1,287 | −367 | 65.1 | 34.9 | 104.4 | 11.7 |

TABLE VI.11—CAPACITOR-START CAPACITOR-RUN MOTORS: LIFE-CYCLE COST AND PAYBACK PERIOD RESULTS FOR A SHIPMENT-WEIGHTED PRODUCT CLASS DISTRIBUTION

| Energy efficiency level | Average efficiency % | Life-cycle cost | | | | Life-cycle cost savings | | | Payback period years | |
|---|---|---|---|---|---|---|---|---|---|---|
| | | Average installed price $ | Average annual energy use kWh | Average annual operating cost $ | Average life-cycle cost $ | Average savings $ | Customers with | | Average | Median |
| | | | | | | | Net cost % | Net benefit % | | |
| Baseline | 73.2 | 582 | 2310 | 167.38 | 1,349 | ..... | ..... | ..... | ..... | ..... |
| 1 | 76.7 | 594 | 2208 | 160.02 | 1,325 | 24 | 29.3 | 70.7 | 10.9 | 3.3 |
| 2 | 80.9 | 626 | 2036 | 147.55 | 1,299 | 50 | 38.4 | 61.6 | 14.9 | 4.4 |
| 3 | 83.0 | 639 | 1965 | 142.43 | 1,289 | 60 | 39.7 | 60.3 | 15.4 | 4.6 |
| 4 | 84.0 | 653 | 1979 | 143.43 | 1,304 | 45 | 46.1 | 53.9 | 19.8 | 5.9 |
| 5 | 85.2 | 673 | 1959 | 141.96 | 1,318 | 32 | 52.6 | 47.4 | 23.9 | 7.2 |
| 6 | 85.9 | 719 | 1923 | 139.37 | 1,351 | −1 | 60.2 | 39.9 | 32.5 | 8.9 |
| 7 | 87.8 | 749 | 1873 | 135.72 | 1,364 | −15 | 65.1 | 35.0 | 35.1 | 10.1 |
| 8 | 89.0 | 1,629 | 1824 | 132.17 | 2,228 | −879 | 94.7 | 5.3 | 200.0 | 36.4 |

b. Life-Cycle Cost Sensitivity Calculations

DOE made sensitivity calculations for the case where CSIR motor owners switch to CSCR motors. DOE reports the details of the sensitivity calculations in chapter 8 of the TSD and the accompanying appendices. Section VI.C.1.a above describes the relationship between efficiency levels for the two categories of capacitor-start motors and the TSLs. For TSLs where there is a large increase in first cost for CSIR motors and only a moderate increase in price for CSCR motors, DOE forecasts that a large fraction of CSIR motor customers will switch to CSCR motors. Table VI.12 shows the shipments-weighted average of the LCC for CSIR motors including those users that switch to CSCR. The table shows that a negative average LCC is forecast for TSL 6, the level at which both CSIR and CSCR motors are at the maximum technologically feasible efficiency for space-constrained designs, and at TSL 8, the level with the greatest energy savings.

TABLE VI.12—CAPACITOR-START INDUCTION-RUN MOTORS: SHIPMENT-WEIGHTED LIFE-CYCLE COST AND PAYBACK PERIOD RESULTS FOR A ONE-HALF HORSEPOWER MOTOR WITH SWITCHING TO CSCR

| Trial standard level | Life-cycle cost | | | | Life-cycle cost savings | | |
|---|---|---|---|---|---|---|---|
| | Average installed price $ | Average annual energy use kWh | Average annual operating cost $ | Average life cycle cost $ | Average savings $ | Customers with | |
| | | | | | | Net cost % | Net benefit % |
| Baseline | | | | | | | |
| 1 | 528 | 969 | 70.8 | 854 | 58 | 32.5 | 67.5 |
| 2 | 528 | 969 | 70.8 | 854 | 58 | 32.5 | 67.5 |
| 3 | 547 | 945 | 69.0 | 865 | 47 | 41.7 | 58.3 |
| 4 | 590 | 913 | 66.7 | 897 | 15 | 55.0 | 45.0 |
| 5 | 589 | 913 | 66.7 | 897 | 15 | 55.0 | 45.0 |
| 6 | 994 | 854 | 62.4 | 1,282 | −370 | 66.0 | 34.0 |
| 7 | 601 | 863 | 63.1 | 891 | 23 | 53.7 | 46.3 |
| 8 | 633 | 847 | 61.9 | 917 | −3 | 60.6 | 39.4 |

Additional sensitivity analyses examined the magnitude by which the estimates varied when the results of the NEMA survey of OEMs (motor distributions by application and sector, operating hours, and the fraction of motors that are space-constrained in their applications) were used. Other sensitivities were conducted by varying inputs such as the cost of electricity, the purchase year of the motor, the motor capacity, the number of poles and other inputs and assumptions of the analysis. DOE reports the details of all of the sensitivity calculations in chapter 8 of the TSD and the accompanying appendices.

As discussed in section IV.E.1 above, NEMA submitted the results of a survey of their OEM customers that install motors covered by today's rule in their products. The survey reports distributions by application and owner type, estimates of annual hours of operation, and the fraction of motors that are space-constrained. NEMA also provided information on a sixth application not included in DOE's NOPR, service industry motors. DOE ran a sensitivity analysis using the data NEMA provided on motor distributions. Under this sensitivity, LCC savings are reduced and payback periods are increased for polyphase and CSCR motor customers, while LCC savings are increased and payback periods reduced for CSIR motor customers. This is the result of average operating hours of polyphase and CSCR motors being reduced by about 30 percent from the DOE reference case, while operating hours of CSIR motors are increased by about 10 percent.

Details on these and other LCC sensitivity cases can be found in TSD appendix 8A.

c. Customer Subgroup Analysis

Using the LCC spreadsheet model, DOE estimated the impacts of the TSLs on the following customer subgroups: Small businesses and customers with space-constrained applications. DOE analyzed the small business subgroup because this group has typically had less access to capital than larger businesses, which results in higher financing costs and a higher discount rate than the industry average. 74 FR 61442, 61459. DOE estimated the LCC and PBP for the small business subgroup, as shown in Table VI.13 through Table VI.15. The analysis indicates that the small business subgroup is expected to have lower LCC savings and longer payback periods than the industry average.

Chapter 12 of the TSD provides more detailed discussion on the LCC subgroup analysis and results.

TABLE VI.13—POLYPHASE MOTORS: SMALL BUSINESS CUSTOMER SUBGROUP

| Energy efficiency level | Life-cycle cost | | | | Life-cycle cost savings | | | Payback period years | |
|---|---|---|---|---|---|---|---|---|---|
| | Average installed price $ | Average annual energy use kWh | Average annual operating cost $ | Average life-cycle cost $ | Average life-cycle cost savings $ | Consumers with | | | |
| | | | | | | Net cost % | Net benefit % | Average | Median |
| Baseline | 516 | 1888 | 137.84 | 1,192 | ..... | ..... | ..... | ..... | ..... |
| 1 | 529 | 1838 | 134.21 | 1,186 | 6 | 51.9 | 48.1 | 22.0 | 6.9 |
| 2 | 536 | 1792 | 130.85 | 1,177 | 15 | 46.1 | 54.0 | 18.0 | 5.6 |
| 3 | 548 | 1733 | 126.54 | 1,167 | 25 | 45.5 | 54.5 | 17.9 | 5.5 |
| 4 | 556 | 1718 | 125.39 | 1,170 | 22 | 49.7 | 50.3 | 20.6 | 6.3 |
| 4b | 588 | 1639 | 119.63 | 1,174 | 18 | 56.5 | 43.5 | 25.1 | 7.7 |
| 5 | 652 | 1604 | 117.13 | 1,226 | −34 | 69.6 | 30.4 | 41.8 | 12.2 |
| 6 | 708 | 1584 | 115.60 | 1,274 | −82 | 80.2 | 19.9 | 54.7 | 16.7 |
| 7 | 1,460 | 1557 | 113.63 | 2,017 | −825 | 97.4 | 2.6 | 243.1 | 50.2 |

TABLE VI.14—CAPACITOR-START INDUCTION RUN MOTORS: SMALL BUSINESS CUSTOMER SUBGROUP

| Energy efficiency level | Life-cycle cost | | | | Life-cycle cost savings | | | Payback period years | |
|---|---|---|---|---|---|---|---|---|---|
| | Average installed price $ | Average annual energy use kWh | Average annual operating cost $ | Average life-cycle cost $ | Average life-cycle cost savings $ | Consumers with | | Average | Median |
| | | | | | | Net cost % | Net benefit % | | |
| Baseline | 497 | 1261 | 91.33 | 869 | ..... | ..... | ..... | ..... | ..... |
| 1 | 506 | 1178 | 85.28 | 852 | 16 | 31.3 | 68.7 | 8.5 | 2.6 |
| 2 | 512 | 1121 | 81.16 | 842 | 27 | 32.4 | 67.6 | 8.7 | 2.7 |
| 3 | 514 | 1067 | 77.25 | 828 | 41 | 28.0 | 72.0 | 7.4 | 2.3 |
| 4 | 533 | 976 | 70.63 | 819 | 50 | 35.8 | 64.2 | 10.4 | 3.2 |
| 5 | 553 | 950 | 68.75 | 832 | 37 | 45.3 | 54.7 | 14.9 | 4.6 |
| 6 | 597 | 917 | 66.37 | 866 | 3 | 58.6 | 41.4 | 24.7 | 7.1 |
| 7 | 995 | 855 | 61.89 | 1,246 | −377 | 68.5 | 31.5 | 108.4 | 11.9 |

TABLE VI.15 CAPACITOR-START CAPACITOR RUN MOTORS: SMALL BUSINESS CUSTOMER SUBGROUP

| Energy efficiency level | Life-cycle cost | | | | Life-cycle cost savings | | | Payback period years | |
|---|---|---|---|---|---|---|---|---|---|
| | Average installed price $ | Average annual energy use kWh | Average annual operating cost $ | Average life-cycle cost $ | Average life-cycle cost savings $ | Consumers with | | Average | Median |
| | | | | | | Net cost % | Net benefit % | | |
| CSCR Baseline | 586 | 2339 | 169.80 | 1,273 | ..... | ..... | ..... | ..... | ..... |
| 1 | 598 | 2236 | 162.36 | 1,253 | 20 | 33.6 | 66.4 | 10.8 | 3.3 |
| 2 | 630 | 2062 | 149.73 | 1,234 | 39 | 43.4 | 56.6 | 15.0 | 4.4 |
| 3 | 643 | 1991 | 144.55 | 1,226 | 47 | 44.7 | 55.3 | 15.5 | 4.6 |
| 4 | 657 | 2005 | 145.59 | 1,241 | 32 | 51.1 | 48.9 | 19.7 | 6.0 |
| 5 | 678 | 1985 | 144.09 | 1,256 | 17 | 58.0 | 42.0 | 23.9 | 7.3 |
| 6 | 723 | 1949 | 141.51 | 1,290 | −17 | 65.1 | 34.9 | 32.8 | 9.1 |
| 7 | 754 | 1898 | 137.82 | 1,306 | −33 | 69.7 | 30.4 | 35.4 | 10.2 |
| 8 | 1,633 | 1849 | 134.23 | 2,171 | −898 | 96.0 | 4.0 | 205.3 | 37.3 |

DOE has analyzed customers with space-constrained applications, *i.e.,* customers whose motor stack length can increase by no more than 20 percent, because they cannot realize the full economic benefit of efficiency improvements in small electric motors. Increasing the stack length of small motors is one way to improve their efficiency. But customers with space-constrained applications cannot increase the stack length of the motors they use without being subject to burdens to which other small motor users are not. Furthermore, although small electric motors without increased stack length could meet the TSLs DOE has evaluated in this rulemaking, such motors use other, more costly design options. Table VI.16 through Table VI.18 show the mean LCC savings and the mean PBP (in years) for equipment that meets the energy conservation standards in today's final rule for the subgroup of customers with space-constrained applications.

The analysis indicates that the economic benefits of efficiency improvements in small electric motors will be lower for customers subject to space constraints than for those who do not face such constraints, as well as for the industry average, particularly for motors at the higher efficiency levels. For the standard levels promulgated by today's rule, customers will still realize net benefits from space-constrained polyphase and CSCR motors, but not from space-constrained CSIR motors. OEMs whose applications have space constraints can replace a less efficient CSIR motor with a more efficient CSCR motor without increasing stack length, and still realize net benefits, as shown in Table VI.12 above. If these applications cannot accommodate a motor with a run capacitor, OEMs can either redesign their application to accommodate a CSCR motor, purchase a stockpile of motors not covered by today's rule to install in future production of their application, or replace their motor with a fully enclosed motor not covered by today's rule.

Chapter 11 of the TSD explains DOE's method for conducting the customer subgroup analysis and presents the detailed results of that analysis.

TABLE VI.16—POLYPHASE MOTORS: SPACE-CONSTRAINED APPLICATIONS SUBGROUP

| Energy efficiency level | Life-cycle cost | | | | Life-cycle cost savings | | | Payback period years | |
|---|---|---|---|---|---|---|---|---|---|
| | Average installed price $ | Average annual energy use kWh | Average annual operating cost $ | Average life-cycle cost $ | Average life-cycle cost savings $ | Consumers with | | Average | Median |
| | | | | | | Net cost % | Net benefit % | | |
| Baseline | 512 | 1903 | 140.60 | 1,318 | ..... | ..... | ..... | ..... | ..... |
| 1 | 524 | 1853 | 136.90 | 1,308 | 9 | 45.6 | 54.4 | 21.5 | 6.8 |
| 2 | 531 | 1807 | 133.49 | 1,296 | 22 | 40.2 | 59.8 | 17.5 | 5.5 |
| 3 | 543 | 1748 | 129.13 | 1,282 | 36 | 39.6 | 60.4 | 17.4 | 5.4 |
| 4 | 552 | 1732 | 127.96 | 1,284 | 34 | 43.7 | 56.3 | 20.0 | 6.3 |
| 4b | 582 | 1650 | 121.98 | 1,280 | 37 | 49.7 | 50.3 | 24.2 | 7.5 |
| 5 | 756 | 1610 | 119.00 | 1,437 | −120 | 84.8 | 15.2 | 71.8 | 22.3 |
| 6 | 769 | 1590 | 117.55 | 1,441 | −123 | 84.3 | 15.7 | 70.7 | 22.1 |

TABLE VI.16—POLYPHASE MOTORS: SPACE-CONSTRAINED APPLICATIONS SUBGROUP—Continued

| Energy efficiency level | Life-cycle cost | | | | Life-cycle cost savings | | | Payback period years | |
|---|---|---|---|---|---|---|---|---|---|
| | Average installed price $ | Average annual energy use kWh | Average annual operating cost $ | Average life-cycle cost $ | Average life-cycle cost savings $ | Consumers with | | | |
| | | | | | | Net cost % | Net benefit % | Average | Median |
| 7 | 3,548 | 1543 | 114.11 | 4,201 | −2,883 | 100.0 | 0.0 | 728.2 | 226.0 |

TABLE VI.17—CAPACITOR-START INDUCTION RUN MOTORS: SPACE-CONSTRAINED APPLICATIONS CUSTOMER SUBGROUP

| Energy efficiency level | Life-cycle cost | | | | Life-cycle cost savings | | | Payback period years | |
|---|---|---|---|---|---|---|---|---|---|
| | Average installed price $ | Average annual energy use kWh | Average annual operating cost $ | Average life-cycle cost $ | Average life-cycle cost savings $ | Consumers with | | | |
| | | | | | | Net cost % | Net benefit % | Average | Median |
| Baseline | 494 | 1274 | 92.66 | 923 | ..... | ..... | ..... | ..... | ..... |
| 1 | 503 | 1190 | 86.56 | 903 | 20 | 26.7 | 73.3 | 8.5 | 2.6 |
| 2 | 509 | 1133 | 82.42 | 890 | 33 | 27.5 | 72.5 | 8.8 | 2.6 |
| 3 | 511 | 1079 | 78.48 | 873 | 49 | 23.6 | 76.4 | 7.5 | 2.2 |
| 4 | 539 | 976 | 71.00 | 867 | 56 | 37.2 | 62.8 | 12.9 | 3.9 |
| 5 | 544 | 955 | 69.45 | 864 | 58 | 38.0 | 62.0 | 13.4 | 4.0 |
| 6 | 665 | 925 | 67.28 | 976 | −53 | 74.0 | 26.0 | 42.3 | 12.6 |
| 7 | 2,559 | 848 | 61.68 | 2,843 | −1,921 | 100.0 | 0.0 | 418.9 | 124.7 |

TABLE VI.18—CAPACITOR-START CAPACITOR RUN MOTORS: SPACE-CONSTRAINED APPLICATIONS CUSTOMER SUBGROUP

| Energy efficiency level | Life-cycle cost | | | | Life-cycle cost savings | | | Payback period years | |
|---|---|---|---|---|---|---|---|---|---|
| | Average installed price $ | Average annual energy use kWh | Average annual operating cost $ | Average life-cycle cost $ | Average life-cycle cost savings $ | Consumers with | | | |
| | | | | | | Net cost % | Net benefit % | Average | Median |
| Baseline | 579 | 2313 | 167.74 | 1,355 | ..... | ..... | ..... | ..... | ..... |
| 1 | 591 | 2212 | 160.38 | 1,331 | 24 | 29.2 | 70.8 | 10.9 | 3.3 |
| 2 | 633 | 2053 | 148.85 | 1,320 | 35 | 47.4 | 52.6 | 19.0 | 5.8 |
| 3 | 645 | 1998 | 144.88 | 1,312 | 43 | 47.2 | 52.8 | 19.2 | 5.9 |
| 4 | 653 | 1991 | 144.36 | 1,316 | 40 | 49.3 | 50.7 | 21.1 | 6.5 |
| 5 | 671 | 1981 | 143.61 | 1,330 | 26 | 55.4 | 44.6 | 25.3 | 7.8 |
| 6 | 839 | 1914 | 138.80 | 1,476 | −121 | 84.3 | 15.7 | 60.1 | 18.4 |
| 7 | 854 | 1862 | 135.02 | 1,473 | −118 | 82.5 | 17.5 | 56.3 | 17.1 |
| 8 | 3,992 | 1815 | 131.61 | 4,597 | −3,242 | 100.0 | 0.0 | 634.4 | 193.1 |

d. Rebuttable Presumption Payback

As discussed in section III.D.2, EPCA provides a rebuttable presumption that, in essence, an energy conservation standard is economically justified if the increased purchase cost for a product that meets the standard is less than three times the value of the first-year energy savings resulting from the standard. However, DOE routinely conducts a full economic analysis that considers the full range of impacts, including those to the customer, manufacturer, Nation, and environment, as required under 42 U.S.C. 6295(o)(2)(B)(i) and 42 U.S.C. 6316(e)(1). The results of this analysis serve as the basis for DOE to evaluate definitively the economic justification for a potential standard level (thereby supporting or rebutting the results of any preliminary determination of economic justification).

For comparison with the more detailed analysis results, DOE calculated a rebuttable presumption payback period for each TSL. Table VI.19 and Table VI.20 show the rebuttable presumption payback periods for the representative product classes. No polyphase TSL has a rebuttable presumption payback period of less than 3 years. For CSIR and CSCR motors, TSLs 1 through 3 have rebuttable presumption payback periods of less than 3 years.

TABLE VI.19—REBUTTABLE-PRESUMPTION PAYBACK PERIODS FOR REPRESENTATIVE POLYPHASE SMALL ELECTRIC MOTORS (1 HP, 4 POLES)

| TSL | Payback period years |
|---|---|
| 1 | 3.3 |
| 2 | 3.0 |
| 3 | 3.3 |
| 4 | 3.8 |
| 4b | 4.9 |
| 5 | 7.9 |
| 6 | 10.2 |
| 7 | 45.7 |

TABLE VI.20—REBUTTABLE-PRESUMPTION PAYBACK PERIODS FOR REPRESENTATIVE CAPACITOR-START SMALL ELECTRIC MOTORS

| TSL | Induction-run (½ hp, 4 poles) | | Capacitor-run (¾ hp 4 poles) | |
|---|---|---|---|---|
| | CSIR level | Payback period years | CSCR level | Payback period years |
| 1 | 4 | 1.7 | 2 | 1.5 |
| 2 | 4 | 1.7 | 3 | 2.7 |
| 3 | 5 | 2.5 | 3 | 2.7 |
| 4 | 6 | 4.1 | 4 | 3.3 |
| 5 | 6 | 4.1 | 3 | 2.7 |
| 6 | 7 | 17.7 | 8 | 35.5 |
| 7 | 7 | 17.7 | 3 | 2.7 |
| 8 | 7 | 17.7 | 7 | 6.0 |

2. Economic Impact on Manufacturers

For the NOPR, DOE used the INPV in the MIA to compare the financial impacts of different TSLs on small electric motor manufacturers. 74 FR 61464–69. The INPV is the sum of all net cash flows discounted by the industry's cost of capital (discount rate). DOE used the GRIM to compare the INPV of the base case (no new energy conservation standards) to that of each TSL for the small electric motor industry. To evaluate the range of cash-flow impacts on this industry, DOE constructed different scenarios using two different assumptions for manufacturer markups: (1) The preservation-of-return-on-invested-capital scenario, and (2) the preservation-of-operating-profit (absolute dollars) scenario. These two scenarios correspond to the range of anticipated market responses, and results in a unique set of cash flows and corresponding industry value at each TSL. These steps allowed DOE to compare the potential impacts on the industry as a function of TSLs in the GRIM. The difference in INPV between the base case and the standards case is an estimate of the economic impacts that implementing that standard level would have on the entire industry. For today's notice, DOE continues to use the above methodology and presents the results in the subsequent sections. See chapter 12 of the TSD for additional information on MIA methodology and results.

a. Industry Cash-Flow Analysis Results

Using the two different markup scenarios, DOE estimated the impact of new standards for small electric motors on the INPV of the small electric motors manufacturing industry. The impact consists of the difference between the INPV in the base case and the INPV in the standards case. INPV is the primary metric used in the MIA, and represents one measure of the fair value of the industry in today's dollars. DOE calculated the INPV by summing all of the annual net cash flows, discounted at the small electric motor industry's cost of capital or discount rate.

To assess the lower end of the range of potential impacts for the small electric motor industry, DOE considered a scenario where a manufacturer's percentage return on working capital and capital invested in fixed assets (net plant, property, and equipment), the year after the new energy conservation standards become effective, is the same as in the base case. This scenario is called the preservation-of-return-on-invested-capital scenario. To assess the higher end of the range of potential impacts for the small electric motor industry, DOE considered a scenario in which the absolute dollar amount of the industry's base-case operating profit (earnings before interest and taxes) remains the same and does not increase in the year after implementation of the standards. This scenario is called the preservation-of-operating-profit (absolute dollars) scenario. For both markup scenarios, DOE considered the same reference shipment scenario found in the NIA. Table VI.21 through Table VI.24 show the range of changes in INPV that DOE estimates could result from the TSLs DOE considered for this final rule. The results present the impacts of energy conservation standards for polyphase small electric motors separately and combine the impacts for CSIR and CSCR small electric motors. The tables also present the equipment conversion costs and capital conversion costs that the industry would incur at each TSL.

TABLE VI.21—MANUFACTURER IMPACT ANALYSIS FOR POLYPHASE SMALL ELECTRIC MOTORS

[Preservation of return on invested capital markup scenario]

| | Units | Base case | Trial standard level | | | | | | | |
|---|---|---|---|---|---|---|---|---|---|---|
| | | | 1 | 2 | 3 | 4 | 4b | 5 | 6 | 7 |
| INPV | 2009$ millions | 70 | 69 | 70 | 71 | 70 | 73 | 82 | 88 | 165 |
| Change in INPV | 2009$ millions | ..... | (0.19) | 0.34 | 0.98 | 0.57 | 3.37 | 12.62 | 18.54 | 95.27 |
| | % | ..... | (0.27) | 0.49 | 1.41 | 0.82 | 4.84 | 18.15 | 26.65 | 136.95 |
| Equipment Conversion Costs | 2009$ millions | ..... | 1.9 | 1.9 | 1.9 | 3.8 | 3.8 | 3.8 | 5.8 | 7.7 |
| Capital Conversion Costs | 2009$ millions | ..... | 0.4 | 0.7 | 0.7 | 0.9 | 1.9 | 7.1 | 10.7 | 37.3 |
| Total Investment Required | 2009$ millions | ..... | 2.3 | 2.6 | 2.7 | 4.7 | 5.7 | 10.9 | 16.5 | 45.0 |

TABLE VI.22—MANUFACTURER IMPACT ANALYSIS FOR POLYPHASE SMALL ELECTRIC MOTORS

[Preservation of operating profit markup scenario]

| | Units | Base case | Trial standard level | | | | | | | |
|---|---|---|---|---|---|---|---|---|---|---|
| | | | 1 | 2 | 3 | 4 | 4b | 5 | 6 | 7 |
| INPV | 2009$ millions | 70 | 68 | 68 | 67 | 66 | 64 | 58 | 52 | 0 |

TABLE VI.22—MANUFACTURER IMPACT ANALYSIS FOR POLYPHASE SMALL ELECTRIC MOTORS—Continued
[Preservation of operating profit markup scenario]

| | Units | Base case | Trial standard level | | | | | | | |
|---|---|---|---|---|---|---|---|---|---|---|
| | | | 1 | 2 | 3 | 4 | 4b | 5 | 6 | 7 |
| Change in INPV | 2009$ millions | | (1.49) | (1.86) | (2.26) | (3.58) | (5.43) | (11.80) | (17.51) | (69.47) |
| | % | | (2.15) | (2.67) | (3.25) | (5.15) | (7.80) | (16.96) | (25.16) | (99.85) |
| Equipment Conversion Costs. | 2009$ millions | | 1.9 | 1.9 | 1.9 | 3.8 | 3.8 | 3.8 | 5.8 | 7.7 |
| Capital Conversion Costs | 2009$ millions | | 0.4 | 0.7 | 0.7 | 0.9 | 1.9 | 7.1 | 10.7 | 37.3 |
| Total Investment Required. | 2009$ millions | | 2.3 | 2.6 | 2.7 | 4.7 | 5.7 | 10.9 | 16.5 | 45.0 |

TABLE VI.23—MANUFACTURER IMPACT ANALYSIS FOR CSIR AND CSCR SMALL ELECTRIC MOTORS
[Preservation of return on invested capital markup scenario]

| | Units | Base case | Trial standard level | | | | | | | |
|---|---|---|---|---|---|---|---|---|---|---|
| | | | 1 | 2 | 3 | 4 | 5 | 6 | 7 | 8 |
| INPV | 2009$ millions | 279 | 287 | 289 | 295 | 311 | 308 | 466 | 297 | 325 |
| Change in INPV | 2009$ millions | | 8.40 | 9.46 | 16.27 | 32.15 | 28.48 | 186.60 | 18.40 | 46.35 |
| | % | | 3.01 | 3.39 | 5.83 | 11.52 | 10.20 | 66.87 | 6.59 | 16.61 |
| Equipment Conversion Costs. | 2009$ millions | | 16.7 | 16.7 | 24.9 | 25.3 | 24.9 | 33.7 | 24.9 | 25.3 |
| Capital Conversion Costs | 2009$ millions | | 9.4 | 10.5 | 16.5 | 21.7 | 18.3 | 79.9 | 20.7 | 29.0 |
| Total Investment Required. | 2009$ millions | | 26.1 | 27.2 | 41.4 | 47.0 | 43.2 | 113.6 | 45.5 | 54.3 |

TABLE VI.24—MANUFACTURER IMPACT ANALYSIS FOR CSIR AND CSCR SMALL ELECTRIC MOTORS
[Preservation of operating profit markup scenario]

| | Units | Base case | Trial standard level | | | | | | | |
|---|---|---|---|---|---|---|---|---|---|---|
| | | | 1 | 2 | 3 | 4 | 5 | 6 | 7 | 8 |
| INPV | 2009$ millions | 279 | 259 | 258 | 247 | 236 | 239 | 127 | 245 | 226 |
| Change in INPV | 2009$ millions | | (19.99) | (20.79) | (32.42) | (43.15) | (40.09) | (152.05) | (34.05) | (52.58) |
| | % | | (7.16) | (7.45) | (11.62) | (15.46) | (14.37) | (54.49) | (12.20) | (18.84) |
| Equipment Conversion Costs. | 2009$ millions | | 16.7 | 16.7 | 24.9 | 25.3 | 24.9 | 33.7 | 24.9 | 25.3 |
| Capital Conversion Costs | 2009$ millions | | 9.4 | 10.5 | 16.5 | 21.7 | 18.3 | 79.9 | 20.7 | 29.0 |
| Total Investment Required. | 2009$ millions | | 26.1 | 27.2 | 41.4 | 47.0 | 43.2 | 113.6 | 45.5 | 54.3 |

Polyphase Small Electric Motors

DOE estimated the impacts on INPV at TSL 1 to range from $0.19 million to −$1.49 million, or a change in INPV of −0.27 percent to −2.15 percent. At this level, industry cash flow decreases by approximately 13.3 percent, to $4.84 million, compared to the base-case value of $5.58 million in the year leading up to the energy conservation standards. TSL 1 represents an efficiency increase of 2 percent over the baseline for polyphase motors. The majority of manufacturers have motors that meet this efficiency level. All manufacturers that were interviewed stated that their existing motor designs allow for simple modifications that would require minor capital and equipment conversion costs to reach TSL 1. A possible modification analyzed in the engineering analysis is a roughly 7 percent increase in the number of laminations within both space-constrained and non space-constrained motors. Manufacturers indicated that modifications like increased laminations could be made within existing baseline motor designs without significantly altering their size. In addition, these minor design changes will not raise the production costs beyond the cost of most motors sold today, resulting in minimal impacts on industry value.

DOE estimated the impacts in INPV at TSL 2 to range from $0.34 million to −$1.86 million, or a change in INPV of 0.49 percent to 2.67 percent. At this level, industry cash flow decreases by approximately 15.6 percent, to $4.71 million, compared to the base-case value of $5.58 million in the year leading up to the energy conservation standards. TSL 2 represents an efficiency increase of 4 percent over the baseline for polyphase motors. Similar to TSL 1, at TSL 2 manufacturers stated that their existing motor designs allow for simple modifications that would entail only minor capital and equipment conversion costs. A possible modification analyzed in the engineering analysis increases the number of laminations by approximately 15 percent from the baseline within both space-constrained and non space-constrained motors. Manufacturers indicated that these modifications could be made within baseline motor designs without significantly changing their size. At TSL 2, the production costs of standards compliant motors do not increase enough to significantly affect INPV.

At TSL 3, DOE estimated the impacts in INPV to range from $0.98 million to −$2.26 million, or a change in INPV of 1.41 percent to −3.25 percent. At this level, industry cash flow decreases by approximately 16.4 percent, to $4.67 million, compared to the base-case value of $5.58 million in the year leading up to the energy conservation standards. TSL 3 represents an efficiency increase of 6 percent over the baseline for polyphase motors. Similar to TSL 1 and TSL 2, at TSL 3 manufacturers stated that their existing motor designs would still allow for

simple modifications that would not require significant capital and equipment conversion costs. In the engineering analysis, standards compliant motors that meet the efficiency requirements at TSL 3 have 17-percent increase in the number of laminations compared to the baseline design within both space-constrained and non space-constrained motors. These changes do not result in significant impacts on INPV.

At TSL 4, DOE estimated the impacts in INPV to range from $0.57 million to −$3.58 million, or a change in INPV of 0.82 percent to −5.15 percent. At this level, industry cash flow decreases by approximately 27.7 percent, to $4.03 million, compared to the base-case value of $5.58 million in the year leading up to the energy conservation standards. TSL 4 represents an efficiency increase of 7 percent over the baseline for polyphase motors. Most manufacturers that were interviewed are able to reach this level without significant redesigns. At TSL 4, a possible design pathway for manufacturers could be to increase the number of laminations by approximately 20 percent over the baseline designs within space-constrained and non space-constrained motors.

At TSL 4b, DOE estimated the impacts in INPV to range from $3.37 million to −$5.43 million, or a change in INPV of 4.84 percent to −7.80 percent. At this level, industry cash flow decreases by approximately 36.0 percent, to $3.57 million, compared to the base-case value of $5.58 million in the year leading up to the energy conservation standards. TSL 4b represents an efficiency increase of 8 percent over the baseline for polyphase motors. Most manufacturers that were interviewed are able to reach this level without significant redesigns. A possible redesign for non space-constrained motors would include increasing the number of laminations by 47 percent relative to the baseline motor design. For space-constrained motors, redesigns could require up to 20 percent more laminations of better grade electrical steel. However, manufacturers reported that efficiency levels similar to TSL 4b would be the highest achievable before required efficiencies could significantly change motor designs and production equipment. However, setting a level higher than TSL 4b may require significant motor size changes.

At TSL 5, DOE estimated the impacts in INPV to range from $12.62 million to −$11.80 million, or a change in INPV of 18.15 percent to −16.96 percent. At this level industry cash flow decreases by approximately 77.7 percent, to $1.24 million, compared to the base-case value of $5.58 million in the year leading up to the energy conservation standards. TSL 5 represents an efficiency increase of 10 percent over the baseline for polyphase motors. TSL 5 is equivalent to the current NEMA premium level that manufacturers produce for medium-sized electric motors.

Although some manufacturers reported having existing small electric motors that reach TSL 5, the designs necessary are more complex than their cost optimized designs at lower TSLs. A possible redesign for non space-constrained motors would include adding up to 49 percent more laminations relative to the baseline motor design and improving the grade of steel. For space-constrained motors, redesigns could require up to 114 percent more laminations of a thinner and higher grade of steel. Manufacturers are concerned that redesigns at TSL 5 could increase the size of the motors if they do not currently have motors that reach the NEMA premium efficiency levels. A shift to larger motors could be detrimental to sales due to the inability of OEMs to use standards-compliant motors as direct replacements in some applications.

According to manufacturers, at TSL 5, the industry would incur significantly higher capital and equipment conversion costs in comparison to the lower efficiency levels analyzed. DOE estimates that the capital and equipment conversion costs required to make the redesigns at TSL 5 would be approximately four times the amount required to meet TSL 1. At TSL 5 manufacturers would also be required to shift their entire production of baseline motors to higher priced and higher efficiency motors, making their current cost-optimized designs obsolete. These higher production costs could have a greater impact on the industry value if operating profit does not increase. Manufacturers indicated that setting energy conservation standards at TSL 5 could cause some manufacturers to consider exiting the small electric motor market because of the lack of resources, potentially unjustifiable investments for a small segment of their business, and the possibility of lower revenues if OEMs will not accept large motors.

At TSL 6, DOE estimated the impacts in INPV to range from $18.54 million to −$17.51 million, or a change in INPV of 26.65 percent to −25.16 percent. At this level industry cash flow decreases by approximately 117.2 percent, to −$0.96 million, compared to the base-case value of $5.58 million in the year leading up to the energy conservation standards. TSL 6 represents an efficiency increase of 12 percent over the baseline for polyphase motors. Currently, no small electric motors are rated above the equivalent to the NEMA premium standard (TSL 5). Possible redesigns for space-constrained motors at TSL 6 include the use of copper rotors and a 114-percent increase in the number of laminations of a thinner and higher grade of steel. These changes would cause manufacturers to incur significant capital and equipment conversion costs to redesign their space-constrained motors due to the lack of experience in using copper.

According to manufacturers, copper tooling is significantly costlier and not currently used by any manufacturers for the production of small electric motors. If copper rotor designs are required, manufacturers with in-house die-casting capabilities will need completely new machinery to process copper. Manufacturers that outsource rotor production would pay higher prices for their rotor designs. In both cases, TSL 6 results in significant equipment conversion costs to modify current manufacturing processes in addition to redesigning motors to use copper in the applications of general purpose small electric motors. Largely due to the significant changes to space-constrained motors, DOE estimates that at TSL 6 manufacturers would incur close to seven times the total conversion costs required at TSL 1 (a total of approximately $16.5 million). However, for non space-constrained motors, manufacturers are able to redesign their existing motors without the use of copper rotors by using twice the number of laminations that are contained in the baseline design. Therefore, for non space-constrained motors the impacts at TSL 6 are significantly less because manufacturers can maintain existing manufacturing processes without the potentially significant changes associated with copper rotors. At TSL 6 the impacts for non space-constrained motors are mainly due to higher motor costs and the possible decrease in profitability if manufacturers are unable to fully pass through their higher production costs.

At TSL 7, DOE estimated the impacts in INPV to range from $95.27 million to −$69.47 million, or a change in INPV of 136.95 percent to −99.85 percent. At this level industry cash flow decreases by approximately 342.4 percent, to −$13.52 million, compared to the base-case value of $5.58 million in the year leading up to the energy conservation standards. TSL 7 represents an

efficiency increase of 14 percent over the baseline for polyphase motors.

Currently, the market does not have any motors that reach TSL 7. At TSL 7, space-constrained motor designs may require the use of copper rotors and premium electrical steels, such as the Hiperco steel used in DOE's design. There is some uncertainty about the magnitude of the impacts on the industry of using Hiperco steel. Manufacturers were unsure about the required conversion costs to reach TSL 7 because of the unproven properties and applicability of the technology in the general purpose motors covered by this rulemaking.

Significant R&D for both manufacturing processes and motor redesigns would be necessary to understand the applications of premium steels to general purpose small electric motors. According to manufacturers, requiring this technology could cause some competitors to exit the small electric motor market. If manufacturers' concerns of having to use both copper rotors and new steels materialize, manufacturers could be significantly impacted. For non space-constrained motors, DOE estimates that manufacturers would require the use of copper rotors but not premium steels. If manufacturers are required to redesign non-spaced constrained motors with copper, the total conversion costs for the industry increases greatly because all motors require substantially different production equipment. Finally, the production costs of motors that meet TSL 7 could be up to 18 times higher than the production costs of baseline motors. The cost to manufacture standards-compliant motors could have a significant impact on the industry if operating profit does not increase with production costs.

Capacitor-Start, Induction Run and Capacitor-Start, Capacitor-Run Small Electric Motors

At TSL 1, DOE estimated the impacts in INPV to range from $8.4 million to –$19.99 million, or a change in INPV of 3.01 percent to –7.16 percent. At this level, industry cash flow decreases by approximately 41.3 percent, to $13.13 million, compared to the base-case value of $22.38 million in the year leading up to the energy conservation standards. TSL 1 represents an efficiency increase of 19-percent over the baseline for CSIR motors and 10-percent over the baseline for CSCR motors. At TSL 1 for CSIR motors, DOE estimates manufacturers would need to increase the number of laminations for space-constrained motors by approximately 33 percent and use a thinner and higher grade of steel. For non space-constrained CSIR motors, manufacturers could increase laminations by approximately 61 percent with the use of a better grade of electric steel. For space-constrained CSCR motors, manufacturers could increase laminations by ten percent and use a higher grade of steel. For non space-constrained CSCR motors, manufacturers could increase laminations by approximately 37 percent. For both CSIR and CSCR motors, the additional stack length needed to reach TSL 1 is still within the tolerances of many manufacturers' existing motors. DOE estimates that these changes would cause the industry to incur capital and equipment conversion costs of approximately $26.1 million to reach TSL 1. While TSL 1 would increase production costs, the cost increases are not enough to severely affect INPV under the scenarios analyzed.

At TSL 2, DOE estimated the impacts in INPV to range from $9.46 million to −$20.79 million, or a change in INPV of 3.39 percent to –7.45 percent. At this level, industry cash flow decreases by approximately 43.5 percent, to $12.65 million, compared to the base-case value of $22.38 million in the year leading up to the energy conservation standards. TSL 2 represents an efficiency increase of 19 percent over the baseline for CSIR motors and 13-percent over the baseline for CSCR motors. For CSIR motors, the same changes to meet TSL 1 are necessary for TSL 2. For CSCR motors, TSL 2 represents what manufacturers would consider a NEMA Premium equivalent efficiency level. The changes required for CSCR motors could cause manufacturers to incur additional capital conversion costs to accommodate the required increase in laminations. Imposing standards at TSL 2 would increase production costs for both CSIR and CSCR motors, but the cost increases for both types of motors are not enough to severely affect INPV.

At TSL 3, DOE estimated the impacts in INPV to range from $16.27 million to –$32.42 million, or a change in INPV of 5.83 percent to –11.62 percent. At this level, industry cash flow decreases by approximately 66.5 percent, to $7.51 million, compared to the base-case value of $22.38 million in the year leading up to the energy conservation standards. TSL 3 represents an efficiency increase of 23 percent over the baseline for CSIR motors and 13 percent over the baseline for CSCR motors. At TSL 3, space-constrained CSIR motors could require redesigns that use copper rotors. Using copper rotors for space-constrained CSIR motors could cause manufacturers to incur approximately $41.4 million in capital and equipment conversion costs, largely to purchase the equipment necessary to produce these redesigned motors.

As with polyphase motors, manufacturers reported that copper rotor tooling is significantly costlier than traditional aluminum rotor tooling and not currently used by the industry for the production of small electric motors. Similarly, in-house die-casting capabilities would need completely new machinery to process copper and the alternative of outsourcing rotor production would greatly increase material costs. For non space-constrained CSIR motors, manufacturers could redesign motors by increasing the number of laminations without the use of copper rotors, resulting in significantly smaller impacts. At TSL 3, the impacts for non-space-constrained motors are mainly due to higher motor material costs and a possible decline in profit margins. TSL 3 represents what manufacturers would consider a NEMA Premium equivalent efficiency level for CSCR motors. The required efficiencies for space-constrained CSCR motors could be met by manufacturers by increasing the number of laminations by 15 percent and using higher steel grades. The required efficiencies for non-spaced constrained CSCR motors could be met by increasing the number of laminations by 53 percent. Because the redesigns for CSCR motors are less substantial, the impacts at TSL 3 are driven largely by the required CSIR efficiencies.

At TSL 4, DOE estimated the impacts in INPV to range from $32.15 million to –$43.15 million, or a change in INPV of 11.52 percent to −15.46 percent. At this level, industry cash flow decreases by approximately 77.5 percent, to $5.02 million, compared to the base-case value of $22.38 million in the year leading up to the energy conservation standards. TSL 4 represents an efficiency increase of 27 percent over the baseline for CSIR motors and 15 percent over the baseline for CSCR motors. TSL 4 currently represents a NEMA premium equivalent level for CSIR motors. Possible redesigns for both CSIR and CSCR motors to meet TSL 4 involve both increasing the number of laminations as well as using higher grades of steel.

For space-constrained CSIR motors, redesigns could require the use of copper rotors. Because of these redesigns, standards-compliant motors at TSL 4 have significantly higher costs than manufacturers' baseline motors.

These changes increase the engineering and capital resources that must be employed, especially for CSCR motors. The negative impacts at TSL 4 are driven by the conversion costs that potentially require some single-phase motors to use copper rotors, and the higher production costs of standards-compliant motors.

At TSL 5, DOE estimated the impacts in INPV to range from $28.48 million to –$40.09 million, or a change in INPV of 10.20 percent to –14.37 percent. At this level, industry cash flow decreases by approximately 70.2 percent, to $6.66 million, compared to the base-case value of $22.38 million in the year leading up to the energy conservation standards. TSL 5 represents an efficiency increase of 27 percent over the baseline for CSIR motors and 13 percent over the baseline for CSCR motors. TSL 5 represents NEMA premium equivalent efficiency levels for both CSIR and CSCR motors.

At TSL 5, space-constrained CSIR motors could require the use of copper rotors. The required efficiencies for non space-constrained CSIR motors could be met by manufacturers by increasing the number of laminations by 82 percent and using a higher grade of steel. The required efficiencies for space-constrained CSCR motors could be met by manufacturers by increasing the number of laminations by 15 percent and using higher steel grades. The required efficiencies for non-spaced constrained CSCR motors could be met by increasing the number of laminations by 53 percent.

Although manufacturers reported that meeting TSL 5 is feasible, the production costs of motors at TSL 5 increase substantially and require approximately $43.2 million in total capital and equipment conversion costs. The negative impacts at TSL 5 are driven by these conversion costs that potentially require some CSIR motors to use copper rotors, and the impacts on profitability if the higher production costs of standards-compliant motors cannot be fully passed through to customers.

At TSL 6, DOE estimated the impacts in INPV to range from $186.60 million to –$152.05 million, or a change in INPV of 66.87 percent to –54.49 percent. At this level, industry cash flow decreases by approximately 205.8 percent, to –$22.67 million, compared to the base-case value of $22.38 million in the year leading up to the energy conservation standards. TSL 6 represents an efficiency increase of 33 percent over the baseline for CSIR motors and 23 percent over the baseline for CSCR motors.

Currently, the market does not have any CSIR and CSCR motors that reach TSL 6. TSL 6 represents the max-tech efficiency level for both CSIR and CSCR motors. In addition to the possibility of using copper rotors for both CSIR and CSCR motors, at TSL 6, space-constrained motor designs could require premium steels, such as Hiperco. There is uncertainty about the impact of Hiperco steel on the industry, primarily due to uncertainty about capital conversion costs required to use a new type of steel. Significant R&D in manufacturing processes would be necessary to understand the applications of these premium steels in general purpose small electric motors. Because all space-constrained motors could require copper rotors and premium steels and all non-spaced constrained motors could require copper rotors, the capital conversion costs are a significant driver of INPV at TSL 6. Finally, the production costs of motors that meet TSL 6 can be as high as 13 times the production cost of baseline motors, which impact profitability if the higher production costs cannot be fully passed through to OEMs. Manufacturers indicated that the potentially large impacts on the industry at TSL 6 could force some manufacturers to exit the small electric motor market because of the lack of resources and what could be an unjustifiable investment for a small segment of their total business.

At TSL 7, DOE estimated the impacts in INPV to range from $18.40 million to –$34.05 million, or a change in INPV of 6.59 percent to –12.20 percent. At this level, industry cash flow decreases by approximately 74.7 percent, to $5.66 million, compared to the base-case value of $22.38 million in the year leading up to the energy conservation standards. TSL 7 represents an efficiency increase of 33 percent over the baseline for CSIR motors and 13 percent over the baseline for CSCR motors.

TSL 7 corresponds to the NEMA premium equivalent efficiency for CSCR motors. The required efficiencies for space-constrained CSCR motors could be met by manufacturers by increasing the number of laminations by 15 percent and using higher steel grades. The required efficiencies for non space-constrained CSCR motors could be met by increasing the number of laminations by 53 percent. Consequently, the industry is not severely impacted by the CSCR efficiency requirements at TSL 7 because these design changes could be met with relatively minor changes to baseline designs.

However, there are no CSIR motors currently on the market that reach TSL 7 (the max-tech efficiency level for CSIR). At TSL 7 space-constrained CSIR redesigns could require the use of both copper rotors and premium steels while non space-constrained CSIR motors could require only copper rotors. Manufacturers continue to have the same concerns about copper rotors and premium steels for CSIR motors as with other efficiency levels that may require these technologies. The impacts on INPV from CSIR motors are mainly associated with estimated shipments of non-space constrained CSIR motors and how investments exclude premium steels in motor redesigns. The INPV impacts for all single-phase motors at TSL 7 are less severe than at TSL 6 due to a change in balance of shipments between CSIR and CSCR motors. At TSL 7, the possible high cost of CSIR motors would likely cause customers to migrate to CSCR motors.

In its analysis, DOE assumed that manufacturers would not invest in all the alternative technologies for CSIR motors in light of the expected migration to CSCR motors. At TSL 7, the industry is impacted (though to a lesser extent than at TSL 6) by the high conversion costs for CSIR motors, for which manufacturers must invest even though these are a small portion of total shipments after standards. However, because the total volume of single-phase motors does not decline with the shift from CSIR to CSCR motors, the higher revenues from standards-compliant CSCR motors mitigate redesign costs for CSIR motors.

At TSL 8, DOE estimated the impacts in INPV to range from $46.35 million to –$52.58 million, or a change in INPV of 13.07 percent to –16.17 percent. At this level, industry cash flow decreases by approximately 92.1 percent, to $1.77 million, compared to the base-case value of $22.38 million in the year leading up to the compliance date for the energy conservation standards. TSL 8 represents an efficiency increase of 33 percent over the baseline for CSIR motors and 20 percent over the baseline for CSCR motors.

As with TSL 7, CSIR motors are at the max-tech efficiency level at TSL 8. However, the impacts on INPV are worse at TSL 7 because the efficiency requirements for CSCR motors increase. At TSL 8, both space-constrained and non space-constrained CSCR motors could require the use of copper, which increases the total conversion costs for the industry. Manufacturers continue to share the same concerns about the copper and premium steel investments for CSCR and CSIR motors as at TSL 6

and TSL 7. Like TSL 7, TSL 8 causes a migration of CSIR motors to CSCR motors. DOE assumed that manufacturers would fully incur the required conversion costs for CSCR, but partially for CSIR motors, due to the low market share of CSIR motors after the energy conservation standards must be met. After these standards apply, the shift to CSCR motors increases total industry revenue and helps to mitigate impacts related to capital conversion costs necessary for CSIR motors to use alternative technologies.

b. Impacts on Employment

As discussed in the NOPR and for today's final rule, DOE does not believe that standards would materially alter the domestic employment levels of the small electric motors industry under any of the TSLs considered for today's final rule. 74 FR 61469. Even if DOE set new efficiency levels high enough to cause some manufacturers to exit the small electric motor market, the direct employment impact would likely be minimal. Id. Most covered small motors are manufactured on shared production lines and in factories that also produce a substantial number of other products. If a manufacturer decided to exit the market, these employees would likely be used in some other capacity, reducing the number of headcount reductions. These manufacturers estimated that no production jobs would be lost due to energy conservation standards, but rather the engineering departments could be reduced by up to one engineer per dropped product line.

The employment impacts calculated by DOE are independent of the employment impacts from the broader U.S. economy, which are documented in chapter 15 of the TSD accompanying this notice and discussed in section VI.C.3. Based on available data and its analyses, DOE does not believe that the effects of today's rule would substantially impact employment levels in the small electric motor industry. For further information and results on direct employment see chapter 12 of the TSD.

c. Impacts on Manufacturing Capacity

As detailed in the NOPR, no change in the fundamental assembly of small electric motors would be required by DOE adoption of any of the TSLs considered for today's rule, and none of the TSLs would require replacing or adding to existing facilities to manufacture. 74 FR 61469–70. For today's final rule, DOE continues to believe manufacturers can use any available excess capacity to mitigate any possible capacity constraint as a result of energy conservation standards. In DOE's view, it is more likely that some motors would be discontinued due to lower demand after the promulgation of a standard. For further explanation of the impacts on manufacturing capacity for small electric motors, see chapter 12 of the TSD.

d. Impacts on Subgroups of Manufacturers

For the reasons stated in the NOPR, including its conclusion that no small manufacturers produced small electric motors, DOE did not analyze manufacturer subgroups in the small electric motor industry. 74 FR 61470. DOE did not receive further information or comment that would otherwise change its views.

e. Cumulative Regulatory Burden

While any one regulation may not impose a significant burden on manufacturers, the combined effects of several regulations may have serious consequences for some manufacturers, groups of manufacturers, or an entire industry. Assessing the impact of a single regulation may overlook this cumulative regulatory burden.

DOE recognizes that each regulation can significantly affect manufacturers' financial operations. Multiple regulations affecting the same manufacturer can reduce manufacturers' profits and may cause manufacturers to exit from the market. DOE did not identify any additional DOE regulations that would affect the manufacturers of small electric motors apart from the ones discussed in the NOPR. 74 FR 61470. These included other DOE regulations and international standards. DOE recognizes that each regulation has the potential to impact manufacturers' financial operations. For further information about the cumulative regulatory burden on the small electric motors industry, see chapter 12 of the TSD.

3. National Net Present Value and Net National Employment

The NPV analysis estimates the cumulative benefits or costs to the Nation, discounted to 2009$ in the year 2010, of particular standard levels relative to a base case of no new standard. In accordance with OMB guidelines on regulatory analysis (OMB Circular A–4, section E, September 17, 2003), DOE estimated NPVs using both a 7 percent and 3 percent real discount rate. The 7 percent rate is an estimate of the average before tax rate of return to private capital in the U.S. economy. This rate reflects the returns to real estate and small business capital as well as corporate capital. DOE used this discount rate to approximate the opportunity cost of capital in the private sector, since recent OMB analysis has found the average rate of return to capital to be near this rate. DOE also used the 3 percent discount rate to capture the potential effects of standards on private consumption (*e.g.,* through higher prices for equipment and purchase of reduced amounts of energy). This rate represents the rate at which society discounts future consumption flows to their present value. This rate can be approximated by the real rate of return on long-term Government debt (*e.g.,* the yield on Treasury notes minus the annual rate of change in the Consumer Price Index), which has averaged about 3 percent on a pre-tax basis for the last 30 years.

The NPV was calculated using DOE's reference shipments forecast, which is based on the *AEO 2010* Early Release forecast. In this scenario, shipments display an elasticity of –0.25, which allows for a market shift to enclosed motors when open motors become more expensive than their enclosed equivalents. DOE used its calibrated reference model for the market dynamics of CSIR and CSCR motors. DOE's reference scenario also includes 100 percent of the cost or benefit from changes in reactive power charges, which are faced either by electricity customers or by utilities (which then include them in electricity rates). Table VI.25 and Table VI.26 show the estimated NPV at each of the TSLs for polyphase and capacitor-start small electric motors. For polyphase motors, the NPV is positive at TSLs 1 through 5 using a 7-percent discount rate, and is positive for TSLs 1 through 6 using a 3-percent discount rate. For capacitor-start motors, NPV is positive at all TSLs except TSL 6. The latter TSL corresponds to max-tech efficiency levels for both CSIR and CSCR motors, which have high installed costs and negative lifecycle cost savings. See TSD Chapter 10 for more detailed NPV results.

Across motors, for certain TSLs, DOE estimates there will be a net national savings or positive NPV from the standard, even though a majority of motor customers may face life-cycle cost increases. Life-cycle cost increases result from the large number of small electric motors installed in applications with very low operating hours. The consumers of these motors cannot recover the increased equipment costs through decreased electricity costs, thus experiencing life-cycle cost increases. On the other hand, a substantial minority of motors run at nearly all hours of the day and thus obtain

relatively large savings from the standard.

Table VI.25 and Table VI.26 show DOE's estimates of net present value for each TSL DOE considered for this final rule.

TABLE VI.25—CUMULATIVE NET PRESENT VALUE FOR POLYPHASE SMALL ELECTRIC MOTORS (IMPACT FOR EQUIPMENT SOLD FROM 2015 TO 2045)

| Trial standard level | Net present value billion 2009$ | |
|---|---|---|
| | 7% Discount rate | 3% Discount rate |
| 1 | 0.10 | 0.26 |
| 2 | 0.22 | 0.55 |
| 3 | 0.41 | 1.01 |
| 4 | 0.42 | 1.05 |
| 4b | 0.54 | 1.44 |
| 5 | 0.16 | 0.77 |
| 6 | −0.22 | 0.06 |
| 7 | −6.82 | −12.65 |

TABLE VI.26—CUMULATIVE NET PRESENT VALUE FOR CAPACITOR-START SMALL ELECTRIC MOTORS (IMPACT FOR EQUIPMENT SOLD FROM 2015 TO 2045)

| Trial standard level | Net present value billion 2009$ | |
|---|---|---|
| | 7% Discount rate | 3% Discount rate |
| 1 | 3.01 | 7.03 |
| 2 | 3.05 | 7.13 |
| 3 | 2.83 | 6.87 |
| 4 | 1.97 | 5.35 |
| 5 | 2.08 | 5.57 |
| 6 | −9.29 | −16.23 |
| 7 | 4.74 | 11.08 |
| 8 | 3.03 | 8.14 |

As discussed in section VI.C.1.b above, DOE estimated LCC and payback periods under a sensitivity case using data on motor shipments distributions provided by OEMs via a survey conducted by NEMA. Under this sensitivity case lifecycle costs increase for polyphase and CSCR motor users, but decrease for CSIR motor users. DOE estimates there is a net increase in national benefits from the standards promulgated in today's rule using the new information provided by NEMA, with energy savings increasing from 2.20 to 2.68 quads, and NPV increasing from $12.52 to $19.75 billion, using a 3 percent discount rate.

DOE also analyzed the effect of NEMA's assertion that 95 percent of motors are used in space-constrained applications. However, at the capacitor-start efficiency levels in today's rule, DOE estimates that 97 percent of the CSIR market will migrate to CSCR motors assuming only 20 percent of the market is space-constrained. Therefore, increasing the assumption of the fraction of CSIR motors that is space-constrained to 95-percent only affects the 3-percent of the CSIR market that had not already migrated to CSCR motors under DOE's reference case, and has little effect on the estimates of national energy savings.

Chapter 10 of the TSD has details on the national impacts for the reference case, while the national impacts for these sensitivity cases are presented in appendix 10A.

DOE also estimated for each TSL the indirect employment impact of standards—the impact on the economy in general—in addition to considering the direct employment impacts on manufacturers of products covered in this rulemaking as discussed in section VI.C.2.b. DOE expects the net monetary savings from standards to be redirected to other forms of economic activity. DOE also expects these shifts in spending and economic activity to affect the demand for labor. As shown in Table VI.27 and Table VI.28, DOE estimates that net indirect employment impacts from energy conservation standards for small electric motors would be positive but very small relative to total national employment. Specifically, DOE's analysis indicates that the number of jobs that may be generated by 2045 through indirect impacts ranges from 47 to 6,300 for the TSLs for polyphase small motors, and from 1,100 to 18,700 for the TSLs for capacitor-start small motors. These increases would likely be sufficient to offset fully any adverse impacts on employment that might occur in the small electric motors industry. For details on the employment impact analysis methods and results, see TSD Chapter 14.

TABLE VI.27—NET INCREASE IN NATIONAL INDIRECT EMPLOYMENT UNDER POLYPHASE SMALL ELECTRIC MOTOR TRIAL STANDARDS LEVELS

| Trial standard level | 2015 thousands | 2020 thousands | 2030 thousands | 2045 thousands |
|---|---|---|---|---|
| 1 | 0.047 | 0.136 | 0.222 | 0.299 |
| 2 | 0.084 | 0.254 | 0.418 | 0.565 |
| 3 | 0.151 | 0.463 | 0.761 | 1.030 |
| 4 | 0.190 | 0.539 | 0.874 | 1.178 |

TABLE VI.27—NET INCREASE IN NATIONAL INDIRECT EMPLOYMENT UNDER POLYPHASE SMALL ELECTRIC MOTOR TRIAL STANDARDS LEVELS—Continued

| Trial standard level | 2015 thousands | 2020 thousands | 2030 thousands | 2045 thousands |
|---|---|---|---|---|
| 4b | 0.356 | 0.915 | 1.446 | 1.942 |
| 5 | 0.661 | 1.347 | 2.016 | 2.668 |
| 6 | 0.901 | 1.679 | 2.448 | 3.219 |
| 7 | 2.349 | 3.621 | 4.921 | 6.343 |

TABLE VI.28—NET INCREASE IN NATIONAL INDIRECT EMPLOYMENT UNDER CAPACITOR-START SMALL ELECTRIC MOTOR TRIAL STANDARDS LEVELS

| Trial standard level | 2015 thousands | 2020 thousands | 2030 thousands | 2045 thousands |
|---|---|---|---|---|
| 1 | 1.113 | 3.645 | 5.249 | 7.062 |
| 2 | 1.119 | 3.674 | 5.293 | 7.123 |
| 3 | 1.577 | 4.512 | 6.398 | 8.557 |
| 4 | 2.287 | 5.561 | 7.716 | 10.236 |
| 5 | 2.248 | 5.529 | 7.686 | 10.204 |
| 6 | 8.042 | 12.159 | 15.350 | 19.569 |
| 7 | 1.776 | 5.795 | 8.340 | 11.216 |
| 8 | 2.322 | 9.591 | 13.880 | 18.701 |

4. Impact on Utility or Performance of Equipment

As explained in sections III.D.1.d and V.B.4 of the NOPR, users of these motors will not face a reduction in small electric motor utility or performance under the levels examined under this rulemaking. DOE has not received any additional information suggesting that such a reduction would occur. Accordingly, DOE has concluded that no lessening of the utility or performance of the small electric motors under consideration in this rulemaking would result from adoption of any of the TSLs considered for this final rule. 74 FR 61419, 61476.

5. Impact of Any Lessening of Competition

As discussed in the November 2009 NOPR, 74 FR 61419, 61476, and in section III.D.1.e of this final rule, DOE considers any lessening of competition that is likely to result from standards. The Attorney General determines the impact, if any, of any such lessening of competition.

The DOJ concluded that the standards DOE proposed for small electric motors in the November 2009 NOPR could increase costs for consumers who need to replace either a polyphase or capacitor-start small electric motor in existing equipment. This is because compliance with these standards may require manufacturers to increase the size of their motors such that the larger motors may not fit into existing space-constrained equipment. In turn, owners with a broken motor may need to replace the entire piece of equipment or attempt to have the motor repaired, which could be costly. DOJ requested that DOE consider this impact, and, as warranted, consider exempting from the standard the manufacture and marketing of certain replacement small electric motors for a limited period of time. (DOJ, No. 29 at pp. 1–2) DOJ does not believe the proposed standard would likely lead to a lessening of competition.

For its final rule on energy conservations standards for small electric motors, DOE considered the issue raised by DOJ. DOE believes it adequately accounts for the impacts on those consumers that purchase motors for space-constrained applications by developing motors with higher costs for what it estimates as space-constrained. Furthermore, DOE does not believe it is necessary to exempt motors manufactured to replace motors in space-constrained applications because these motors are not marketed as "for replacement purposes," enforcing such a standard could be problematic. In addition, an exemption for replacement motors would also apply to motors in non-space constrained applications potentially significantly reducing energy savings of this rule. Lastly, DOE believes that the five-year period before the effective date will give customers or OEMs sufficient time to account for any changes to motor sizes or to stockpile replacement motors for their applications.

The Attorney General's response is reprinted at the end of this rule.

6. Need of the Nation To Conserve Energy

Improving the energy efficiency of small electric motors, where economically justified, would likely improve the security of the Nation's energy system by reducing overall demand for energy, thus reducing the Nation's reliance on foreign sources of energy. Reduced electricity demand might also improve the reliability of the electricity system, particularly during peak-load periods. As a measure of this reduced demand, DOE expects the energy savings from today's standards to eliminate the need for approximately 2.16 gigawatts (GW) of generating capacity by 2045 and in 2045, to save an amount of electricity greater than that generated by eight 250 megawatt power plants.

Enhanced energy efficiency also produces environmental benefits in the form of reduced emissions of air pollutants and greenhouse gases associated with energy production. Table VI.29 and Table VI.30 provide DOE's estimate of cumulative $CO_2$, $NO_X$, and Hg emissions reductions that would result from the TSLs considered in this rulemaking. The expected energy savings from these standards may also reduce the cost of maintaining nationwide emissions standards and constraints. In the environmental assessment (EA; chapter 15 of the TSD accompanying this notice), DOE reports estimated annual changes in $CO_2$, $NO_X$, and Hg emissions attributable to each TSL. The cumulative $CO_2$, $NO_X$, and Hg emissions reductions from polyphase motors range up to 23.2 Mt, 16.9 kt, and

0.12 ton, respectively, and up to 121.7 Mt, 88.9 kt, and 0.47 ton, respectively, from single-phase motors.

TABLE VI.29—POLYPHASE SMALL ELECTRIC MOTORS: CUMULATIVE $CO_2$ AND OTHER EMISSIONS REDUCTIONS

[Cumulative reductions for products sold from 2015 to 2045]

| Trial standard level | Emissions reductions | | |
|---|---|---|---|
| | $CO_2$ Mt | $NO_X$ kt | Hg tons |
| 1 | 2.3 | 1.6 | 0.013 |
| 2 | 4.6 | 3.3 | 0.025 |
| 3 | 8.3 | 5.9 | 0.046 |
| 4 | 9.3 | 6.7 | 0.051 |
| 4b | 15.4 | 11.0 | 0.085 |
| 5 | 18.3 | 13.1 | 0.101 |
| 6 | 19.5 | 13.9 | 0.108 |
| 7 | 21.2 | 15.2 | 0.117 |

TABLE VI.30—CAPACITOR-START SMALL ELECTRIC MOTORS: CUMULATIVE $CO_2$ AND OTHER EMISSIONS REDUCTIONS

[Cumulative reductions for products sold from 2015 to 2045]

| Trial standard level | Emissions reductions | | |
|---|---|---|---|
| | $CO_2$ Mt | $NO_X$ kt | Hg tons |
| 1 | 62.9 | 45.1 | 0.265 |
| 2 | 63.5 | 45.5 | 0.267 |
| 3 | 71.7 | 51.4 | 0.302 |
| 4 | 80.5 | 57.7 | 0.339 |
| 5 | 81.0 | 58.1 | 0.341 |
| 6 | 88.5 | 63.5 | 0.373 |
| 7 | 96.8 | 69.5 | 0.408 |
| 8 | 111.4 | 80.0 | 0.469 |

As noted in section IV.L of this final rule, DOE does not report $SO_2$ emissions reductions from power plants because DOE is uncertain that an energy conservation standard would affect the overall level of U.S. $SO_2$ emissions due to emissions caps. DOE also did not include $NO_X$ emissions reduction from power plants in states subject to CAIR because an energy conservation standard would likely not affect the overall level of $NO_X$ emissions in those states due to the emissions caps mandated by CAIR.

In the NOPR, DOE also investigated and considered the potential monetary benefit of any reduced $CO_2$, $SO_2$, $NO_X$, and Hg emissions that could result from the TSLs it considered. 74 FR 61448–53, 61477–84. To estimate the likely monetary benefits of $CO_2$ emission reductions associated with the potential standards, DOE valued the potential global benefits resulting from such reductions at the interim values of $5, $10, $20, $34 and $57 per metric ton in 2007 (in 2008$), and also valued the domestic benefits at approximately $1 per metric ton. 74 FR 61452. For today's final rule DOE has updated its analysis to reflect the outcome of the most recent interagency process regarding the social cost of carbon dioxide emissions (SCC). See section IV.M for a full discussion. The four values of $CO_2$ emissions reductions resulting from that process are $4.70/ton (the average value from a distribution that uses a 5% discount rate), $21.40/ton (the average value from a distribution that uses a 3% discount rate), $35.10/ton (the average value from a distribution that uses a 2.5% discount rate), and $65/ton (the 95th percentile value from a distribution that uses a 3% discount rate). These values are expressed in 2007$ and correspond to the value of emission reductions in 2010; the values for later years are higher due to increasing damages as the magnitude of climate change increases. Table VI.31 and Table VI.32 present the global values of emissions reductions at each TSL. Domestic values are calculated as a range from 7% to 23% of the global values, and these results are presented in Table VI.33 and Table VI.34.

TABLE VI.31—ESTIMATES OF GLOBAL PRESENT VALUE OF $CO_2$ EMISSIONS REDUCTIONS FOR THE PERIOD 2015–2045 UNDER POLYPHASE SMALL ELECTRIC MOTOR TRIAL STANDARD LEVELS AT SCC-SCENARIO-CONSISTENT DISCOUNT RATE

| TSL | Estimated cumulative $CO_2$ emission reductions, Mt | Global value of $CO_2$ emission reductions, million 2009$ | | | |
|---|---|---|---|---|---|
| | | 5% discount rate, average* | 3% discount rate, average* | 2.5% discount rate, average* | 3% discount rate, 95th percentile* |
| 1 | 2.3 | 8 | 40 | 68 | 122 |
| 2 | 4.6 | 16 | 81 | 138 | 248 |
| 3 | 8.3 | 28 | 146 | 248 | 445 |
| 4 | 9.3 | 32 | 165 | 280 | 502 |
| 4b | 15.4 | 52 | 272 | 462 | 828 |
| 5 | 18.3 | 62 | 323 | 550 | 986 |

TABLE VI.31—ESTIMATES OF GLOBAL PRESENT VALUE OF $CO_2$ EMISSIONS REDUCTIONS FOR THE PERIOD 2015–2045 UNDER POLYPHASE SMALL ELECTRIC MOTOR TRIAL STANDARD LEVELS AT SCC-SCENARIO-CONSISTENT DISCOUNT RATE—Continued

| TSL | Estimated cumulative $CO_2$ emission reductions, Mt | Global value of $CO_2$ emission reductions, million 2009$ | | | |
|---|---|---|---|---|---|
| | | 5% discount rate, average* | 3% discount rate, average* | 2.5% discount rate, average* | 3% discount rate, 95th percentile* |
| 6 | 19.5 | 66 | 344 | 585 | 1049 |
| 7 | 21.2 | 72 | 375 | 638 | 1144 |

* Columns are labeled by the discount rate used to calculate the social cost of emissions and whether it is an average value or drawn from a different part of the distribution. Values presented in the table are based on escalating 2007$ to 2009$ for consistency with other values presented in this notice, and incorporate the escalation of the SCC with each year.

TABLE VI.32—ESTIMATES OF GLOBAL PRESENT VALUE OF $CO_2$ EMISSIONS REDUCTIONS FOR THE PERIOD 2015–2045 UNDER CAPACITOR-START SMALL ELECTRIC MOTOR TRIAL STANDARD LEVELS AT SCC-SCENARIO-CONSISTENT DISCOUNT RATE

| TSL | Estimated cumulative $CO_2$ emission reductions, Mt | Global value of $CO_2$ emission reductions, million 2009$ | | | |
|---|---|---|---|---|---|
| | | 5% discount rate, average* | 3% discount rate, average* | 2.5% discount rate, average* | 3% discount rate, 95th percentile* |
| 1 | 62.9 | 216 | 1118 | 1900 | 3410 |
| 2 | 63.5 | 218 | 1129 | 1918 | 3444 |
| 3 | 71.7 | 246 | 1275 | 2167 | 3890 |
| 4 | 80.5 | 277 | 1432 | 2432 | 4367 |
| 5 | 81.0 | 278 | 1441 | 2448 | 4394 |
| 6 | 88.5 | 304 | 1574 | 2674 | 4801 |
| 7 | 96.8 | 333 | 1722 | 2926 | 5253 |
| 8 | 111.4 | 383 | 1982 | 3368 | 6046 |

* Columns are labeled by the discount rate used to calculate the social cost of emissions and whether it is an average value or drawn from a different part of the distribution. Values presented in the table are based on escalating 2007$ to 2009$ for consistency with other values presented in this notice, and incorporate the escalation of the SCC with each year.

TABLE VI.33—ESTIMATES OF DOMESTIC PRESENT VALUE OF $CO_2$ EMISSIONS REDUCTIONS FOR THE PERIOD 2015–2045 UNDER POLYPHASE SMALL ELECTRIC MOTOR TRIAL STANDARD LEVELS AT SCC-SCENARIO-CONSISTENT DISCOUNT RATE

| TSL | Domestic value of $CO_2$ emission reductions, million 2009$ * | | | |
|---|---|---|---|---|
| | 5% discount rate, average** | 3% discount rate, average** | 2.5% discount rate, average** | 3% discount rate, 95th percentile** |
| 1 | 0.5–1.8 | 2.8–9.2 | 4.8–15.7 | 8.5–28.1 |
| 2 | 1.1–3.6 | 5.7–18.7 | 9.7–31.8 | 17.3–57.0 |
| 3 | 2.0–6.4 | 10.2–33.5 | 17.4–57.1 | 31.1–102.3 |
| 4 | 2.2–7.3 | 11.5–37.9 | 19.6–64.4 | 35.1–115.5 |
| 4b | 3.7–12 | 19.0–62.5 | 32.3–106.3 | 58.0–190.5 |
| 5 | 4.3–14.3 | 22.6–74.4 | 38.5–126.5 | 69.0–226.8 |
| 6 | 4.6–15.2 | 24.1–79.1 | 41.0–134.6 | 73.4–241.2 |
| 7 | 5.0–16.6 | 26.3–86.3 | 44.7–146.7 | 80.1–263.0 |

* Domestic values are presented as a range between 7% and 23% of the global values.

** Columns are labeled by the discount rate used to calculate the social cost of emissions and whether it is an average value or drawn from a different part of the distribution. Values presented in the table are based on escalating 2007$ to 2009$ for consistency with other values presented in this notice, and incorporate the escalation of the SCC with each year.

TABLE VI.34—ESTIMATES OF DOMESTIC PRESENT VALUE OF $CO_2$ EMISSIONS REDUCTIONS FOR THE PERIOD 2015–2045 UNDER CAPACITOR-START SMALL ELECTRIC MOTOR TRIAL STANDARD LEVELS AT SCC-SCENARIO-CONSISTENT DISCOUNT RATE

| TSL | Domestic value of $CO_2$ emission reductions, million 2009$ * | | | |
|---|---|---|---|---|
| | 5% discount rate, average** | 3% discount rate, average** | 2.5% discount rate, average** | 3% discount rate, 95th percentile** |
| 1 | 15–50 | 78–257 | 133–437 | 239–784 |
| 2 | 15–50 | 79–260 | 134–441 | 241–792 |
| 3 | 17–57 | 89–293 | 152–498 | 272–895 |
| 4 | 19–64 | 100–329 | 170–559 | 306–1004 |
| 5 | 19–64 | 101–331 | 171–563 | 308–1011 |
| 6 | 21–70 | 110–362 | 187–615 | 336–1104 |
| 7 | 23–77 | 121–396 | 205–673 | 368–1208 |

TABLE VI.34—ESTIMATES OF DOMESTIC PRESENT VALUE OF $CO_2$ EMISSIONS REDUCTIONS FOR THE PERIOD 2015–2045 UNDER CAPACITOR-START SMALL ELECTRIC MOTOR TRIAL STANDARD LEVELS AT SCC-SCENARIO-CONSISTENT DISCOUNT RATE—Continued

| TSL | Domestic value of $CO_2$ emission reductions, million 2009$ * | | | |
|---|---|---|---|---|
| | 5% discount rate, average** | 3% discount rate, average** | 2.5% discount rate, average** | 3% discount rate, 95th percentile** |
| 8 | 27–88 | 139–456 | 236–775 | 423–1391 |

* Domestic values are presented as a range between 7% and 23% of the global values.
** Columns are labeled by the discount rate used to calculate the social cost of emissions and whether it is an average value or drawn from a different part of the distribution. Values presented in the table are based on escalating 2007$ to 2009$ for consistency with other values presented in this notice, and incorporate the escalation of the SCC with each year.

DOE is well aware that scientific and economic knowledge about the contribution of $CO_2$ and other GHG emissions to changes in the future global climate and the potential resulting damages to the world economy continues to evolve rapidly. Thus, any value placed in this rulemaking on reducing $CO_2$ emissions is subject to change. DOE, together with other Federal agencies, will continue to review various methodologies for estimating the monetary value of reductions in $CO_2$ and other GHG emissions. This ongoing review will consider the comments on this subject that are part of the public record for this and other rulemakings, as well as other methodological assumptions and issues. However, consistent with DOE's legal obligations, and taking into account the uncertainty involved with this particular issue, DOE has included in this rule the most recent values and analyses resulting from the ongoing interagency review process.

DOE also estimated a range for the cumulative monetary value of the economic benefits associated with $NO_X$ and Hg emissions reductions anticipated to result from amended standards for SEMs. The dollar per ton values that DOE used are discussed in section IV.M of this final rule. Table VI.35 through Table VI.38 present the estimates calculated using seven percent and three percent discount rates, respectively.

TABLE VI.35—ESTIMATES OF VALUE OF REDUCTIONS OF $NO_X$ AND HG EMISSIONS UNDER POLYPHASE SMALL ELECTRIC MOTOR TRIAL STANDARD LEVELS AT A SEVEN PERCENT DISCOUNT RATE

| Polyphase TSL | Cumulative $NO_X$ emission reductions, kt | Value of $NO_X$ emission reductions, million 2009$ | Cumulative Hg emission reductions, t | Value of Hg emission reductions, million 2009$ |
|---|---|---|---|---|
| 1 | 1.62 | 0.11 to 1.18 | 0.013 | 0.00 to 0.12. |
| 2 | 3.29 | 0.23 to 2.39 | 0.025 | 0.01 to 0.25. |
| 3 | 5.91 | 0.42 to 4.29 | 0.046 | 0.01 to 0.45. |
| 4 | 6.67 | 0.47 to 4.84 | 0.051 | 0.01 to 0.51. |
| 4b | 11.00 | 0.78 to 7.99 | 0.085 | 0.02 to 0.84. |
| 5 | 13.09 | 0.92 to 9.51 | 0.101 | 0.02 to 1.00. |
| 6 | 13.93 | 0.98 to 10.11 | 0.108 | 0.02 to 1.06. |
| 7 | 15.19 | 1.07 to 11.03 | 0.117 | 0.03 to 1.16. |

TABLE VI.36—ESTIMATES OF VALUE OF REDUCTIONS OF $NO_X$ AND HG EMISSIONS UNDER POLYPHASE SMALL ELECTRIC MOTOR TRIAL STANDARD LEVELS AT A THREE PERCENT DISCOUNT RATE

| Polyphase TSL | Cumulative $NO_X$ emission reductions, kt | Value of $NO_X$ emission reductions, million 2009$ | Cumulative Hg emission reductions, t | Value of Hg emission reductions, million 2009$ |
|---|---|---|---|---|
| 1 | 1.62 | 0.34 to 3.46 | 0.013 | 0.01 to 0.24. |
| 2 | 3.29 | 0.68 to 7.01 | 0.025 | 0.01 to 0.48. |
| 3 | 5.91 | 1.22 to 12.59 | 0.046 | 0.02 to 0.87. |
| 4 | 6.67 | 1.38 to 14.21 | 0.051 | 0.02 to 0.98. |
| 4b | 11.00 | 2.28 to 23.45 | 0.085 | 0.04 to 1.62. |
| 5 | 13.09 | 2.71 to 27.90 | 0.101 | 0.04 to 1.93. |
| 6 | 13.93 | 2.89 to 29.68 | 0.108 | 0.05 to 2.05. |
| 7 | 15.19 | 3.15 to 32.37 | 0.117 | 0.05 to 2.24. |

TABLE VI.37—ESTIMATES OF VALUE OF REDUCTIONS OF $NO_X$ AND HG EMISSIONS UNDER CAPACITOR-START SMALL ELECTRIC MOTOR TRIAL STANDARD LEVELS AT A SEVEN PERCENT DISCOUNT RATE

| Capacitor-start TSL | Cumulative $NO_X$ emission reductions, kt | Value of $NO_X$ emission reductions, million 2009$ | Cumulative Hg emission reductions, t | Value of Hg emission reductions, million 2009$ |
|---|---|---|---|---|
| 1 | 45.10 | 3.50 to 35.97 | 0.265 | 0.06 to 2.79. |
| 2 | 45.54 | 3.53 to 36.23 | 0.267 | 0.06 to 2.82. |
| 3 | 51.44 | 3.99 to 41.03 | 0.302 | 0.07 to 3.18. |
| 4 | 57.74 | 4.48 to 46.05 | 0.339 | 0.08 to 3.57. |
| 5 | 58.11 | 4.51 to 46.34 | 0.341 | 0.08 to 3.60. |
| 6 | 63.48 | 4.93 to 50.63 | 0.373 | 0.09 to 3.93. |
| 7 | 69.47 | 5.39 to 55.40 | 0.408 | 0.10 to 4.30. |
| 8 | 79.95 | 6.20 to 63.76 | 0.469 | 0.11 to 4.95. |

TABLE VI.38—ESTIMATES OF VALUE OF REDUCTIONS OF $NO_X$ AND Hg EMISSIONS UNDER CAPACITOR-START SMALL ELECTRIC MOTOR TRIAL STANDARD LEVELS AT A THREE PERCENT DISCOUNT RATE

| Capacitor-start TSL | Cumulative $NO_X$ emission reductions (kt) | Value of $NO_X$ emission reductions million 2009$ | Cumulative Hg emission reductions (t) | Value of Hg emission reductions million 2009$ |
|---|---|---|---|---|
| 1 | 45.10 | 9.60 to 98.70 | 0.265 | 0.12 to 5.22. |
| 2 | 45.54 | 9.69 to 99.66 | 0.267 | 0.12 to 5.27. |
| 3 | 51.44 | 10.95 to 112.58 | 0.302 | 0.13 to 5.95. |
| 4 | 57.74 | 12.29 to 126.37 | 0.339 | 0.15 to 6.68. |
| 5 | 58.11 | 12.37 to 127.17 | 0.341 | 0.15 to 6.72. |
| 6 | 63.48 | 13.52 to 138.94 | 0.373 | 0.17 to 7.34. |
| 7 | 69.47 | 14.79 to 152.03 | 0.408 | 0.18 to 8.04. |
| 8 | 79.95 | 17.02 to 174.97 | 0.469 | 0.21 to 9.25. |

The NPV of the monetized benefits associated with emissions reductions can be viewed as a complement to the NPV of the consumer savings calculated for each TSL considered in this rulemaking. Table VI.40 through Table VI.43 present the NPV values for small electric motors that would result if DOE were to add the estimates of the potential benefits resulting from reduced $CO_2$, $NO_X$, and Hg emissions in each of four valuation scenarios to the NPV of consumer savings calculated for each TSL considered in this rulemaking, at both a seven percent and three percent discount rate. The $CO_2$ values used in the columns of each table correspond with the four scenarios for the valuation of $CO_2$ emission reductions presented in section IV.M. Table VI.39 shows an example of the calculation of the NPV including benefits from emissions reductions for the case of TSL 7 for capacitor-start motors and TSL 4b for polyphase motors.

Although adding the value of consumer savings to the values of emission reductions provides a valuable perspective, the following should be considered: (1) The national consumer savings are domestic U.S. consumer monetary savings found in market transactions, while the values of emissions reductions are based on estimates of marginal social costs, which, in the case of $CO_2$, are based on a global value. (2) The assessments of consumer savings and emission-related benefits are performed with different computer models, leading to different time frames for analysis. For small electric motors, the present value of national consumer savings is measured for the period in which units shipped from 2015 to 2045 continue to operate. However, the time frames of the benefits associated with the emission reductions differ. For example, the value of $CO_2$ emissions reductions reflects the present value of all future climate-related impacts due to emitting a ton of carbon dioxide in that year, out to 2300.

TABLE VI.39—ESTIMATE OF ADDING NET PRESENT VALUE OF CONSUMER SAVINGS TO PRESENT VALUE OF GLOBAL MONETIZED BENEFITS FROM $CO_2$, $NO_X$, AND Hg EMISSIONS REDUCTIONS AT TSL 7 FOR CAPACITOR-START MOTORS AND TSL 4b FOR POLYPHASE MOTORS (2015–2045)

| Category | Present value billion 2009$ | Discount rate (percent) |
|---|---|---|
| **Benefits** | | |
| Operating Cost Savings | 7.6 | 7 |
| | 17.1 | 3 |
| $CO_2$ Monetized Value | | |
| (at $4.7/Metric Ton) * | 0.38 | 5 |
| $CO_2$ Monetized Value | | |
| (at $21.4/Metric Ton) * | 1.99 | 3 |
| $CO_2$ Monetized Value | | |
| (at $35.1/Metric Ton) * | 3.39 | 2.5 |

TABLE VI.39—ESTIMATE OF ADDING NET PRESENT VALUE OF CONSUMER SAVINGS TO PRESENT VALUE OF GLOBAL MONETIZED BENEFITS FROM $CO_2$, $NO_X$, AND Hg EMISSIONS REDUCTIONS AT TSL 7 FOR CAPACITOR-START MOTORS AND TSL 4b FOR POLYPHASE MOTORS (2015–2045)—Continued

| Category | Present value billion 2009$ | Discount rate (percent) |
|---|---|---|
| $CO_2$ Monetized Value | | |
| (at $64.9/Metric Ton)* | 6.08 | 3 |
| $NO_X$ Monetized Value | | |
| (at $2,437/Metric Ton) | 0.03 | 7 |
| | 0.10 | 3 |
| Hg Monetized Value | | |
| (at $17 million/Metric Ton) | 0.003 | 7 |
| | 0.005 | 3 |
| Total Monetary Benefits ** | 9.7 | 7 |
| | 19.2 | 3 |
| **Costs** | | |
| Total Monetary Costs | 2.4 | 7 |
| | 4.5 | 3 |
| **Net Benefits/Costs** | | |
| Including $CO_2$, $NO_X$, and Hg** | 7.3 | 7 |
| | 14.6 | 3 |

*These values represent global values (in 2007$) of the social cost of $CO_2$ emissions in 2010 under several scenarios. The values of $4.7, $21.4, and $35.1 per ton are the averages of SCC distributions calculated using 5%, 3%, and 2.5% discount rates, respectively. The value of $64.9 per ton represents the 95th percentile of the SCC distribution calculated using a 3% discount rate. See section IV.M for details.

**Total Monetary Benefits for both the 3% and 7% cases utilize the central estimate of social cost of $CO_2$ emissions calculated at a 3% discount rate (averaged across three IAMs), which is equal to $21.4/ton in 2010 (in 2007$).

TABLE VI.40—ESTIMATES OF ADDING NET PRESENT VALUE OF CONSUMER SAVINGS (AT 7% DISCOUNT RATE) TO NET PRESENT VALUE OF LOW, CENTRAL, AND HIGH-END GLOBAL MONETIZED BENEFITS FROM $CO_2$, $NO_X$, AND Hg EMISSIONS REDUCTIONS AT ALL TRIAL STANDARD LEVELS FOR POLYPHASE SMALL ELECTRIC MOTORS (2015–2045)

| TSL | Consumer NPV at 7% discount rate added with: | | | |
|---|---|---|---|---|
| | $CO_2$ value of $4.7/metric ton $CO_2$* and low values for $NO_X$ and Hg** billion 2009$ | $CO_2$ value of $21.4/metric ton $CO_2$* and medium values for $NO_X$ and Hg*** billion 2009$ | $CO_2$ value of $35.1/metric ton $CO_2$* and medium values for $NO_X$ and Hg*** billion 2009$ | $CO_2$ value of $64.9/metric ton $CO_2$* and high values for $NO_X$ and Hg**** billion 2009$ |
| 1 | 0.11 | 0.14 | 0.17 | 0.22 |
| 2 | 0.24 | 0.30 | 0.36 | 0.47 |
| 3 | 0.44 | 0.56 | 0.66 | 0.86 |
| 4 | 0.45 | 0.59 | 0.70 | 0.93 |
| 4b | 0.59 | 0.82 | 1.01 | 1.38 |
| 5 | 0.22 | 0.49 | 0.72 | 1.16 |
| 6 | (0.15) | 0.13 | 0.37 | 0.84 |
| 7 | (6.75) | (6.44) | (6.18) | (5.66) |

*These label values per ton represent the global negative externalities of $CO_2$ in 2010, in 2007$. Their present values have been calculated with scenario-consistent discount rates. See section IV.M for a full discussion of the derivation of these values.

**Low Values correspond to $447 per ton of $NO_X$ emissions and $0.764 million per ton of Hg emissions.

***Medium Values correspond to $2,519 per ton of $NO_X$ emissions and $17.2 million per ton of Hg emissions.

****High Values correspond to $4,591 per ton of $NO_X$ emissions and $33.7 million per ton of Hg emissions.

TABLE VI.41—ESTIMATES OF ADDING NET PRESENT VALUE OF CONSUMER SAVINGS (AT 3% DISCOUNT RATE) TO NET PRESENT VALUE OF LOW, CENTRAL, AND HIGH-END GLOBAL MONETIZED BENEFITS FROM $CO_2$, $NO_X$, AND HG EMISSIONS REDUCTIONS AT ALL TRIAL STANDARD LEVELS FOR POLYPHASE SMALL ELECTRIC MOTORS (2015–2045)

| TSL | Consumer NPV at 3% discount rate added with: | | | |
|---|---|---|---|---|
| | $CO_2$ value of $4.7/metric ton $CO_2$* and low values for $NO_X$ and Hg** billion 2009$ | $CO_2$ value of $21.4/metric ton $CO_2$* and medium values for $NO_X$ and Hg*** billion 2009$ | $CO_2$ value of $35.1/metric ton $CO_2$* and medium values for $NO_X$ and Hg*** billion 2009$ | $CO_2$ value of $64.9/metric ton $CO_2$* and high values for $NO_X$ and Hg**** billion 2009$ |
| 1 | 0.27 | 0.30 | 0.33 | 0.39 |
| 2 | 0.57 | 0.64 | 0.69 | 0.81 |
| 3 | 1.04 | 1.16 | 1.27 | 1.47 |
| 4 | 1.08 | 1.22 | 1.34 | 1.57 |
| 4b | 1.49 | 1.73 | 1.92 | 2.29 |

TABLE VI.41—ESTIMATES OF ADDING NET PRESENT VALUE OF CONSUMER SAVINGS (AT 3% DISCOUNT RATE) TO NET PRESENT VALUE OF LOW, CENTRAL, AND HIGH-END GLOBAL MONETIZED BENEFITS FROM $CO_2$, $NO_X$, AND HG EMISSIONS REDUCTIONS AT ALL TRIAL STANDARD LEVELS FOR POLYPHASE SMALL ELECTRIC MOTORS (2015–2045)—Continued

| TSL | Consumer NPV at 3% discount rate added with: | | | |
|---|---|---|---|---|
| | $CO_2$ value of $4.7/metric ton $CO_2$* and low values for $NO_X$ and Hg** billion 2009$ | $CO_2$ value of $21.4/metric ton $CO_2$* and medium values for $NO_X$ and Hg*** billion 2009$ | $CO_2$ value of $35.1/metric ton $CO_2$* and medium values for $NO_X$ and Hg*** billion 2009$ | $CO_2$ value of $64.9/metric ton $CO_2$* and high values for $NO_X$ and Hg**** billion 2009$ |
| 5 | 0.83 | 1.11 | 1.34 | 1.79 |
| 6 | 0.13 | 0.42 | 0.66 | 1.14 |
| 7 | (12.57) | (12.26) | (11.99) | (11.47) |

* These label values per ton represent the global negative externalities of $CO_2$ in 2010, in 2007$. Their present values have been calculated with scenario-consistent discount rates. See section IV.M for a full discussion of the derivation of these values.
** Low Values correspond to $447 per ton of $NO_X$ emissions and $0.764 million per ton of Hg emissions.
*** Medium Values correspond to $2,519 per ton of $NO_X$ emissions and $17.2 million per ton of Hg emissions.
**** High Values correspond to $4,591 per ton of $NO_X$ emissions and $33.7 million per ton of Hg emissions.

TABLE VI.42—ESTIMATES OF ADDING NET PRESENT VALUE OF CONSUMER SAVINGS (AT 7% DISCOUNT RATE) TO NET PRESENT VALUE OF LOW, CENTRAL, AND HIGH-END GLOBAL MONETIZED BENEFITS FROM $CO_2$, $NO_X$, AND HG EMISSIONS REDUCTIONS AT ALL TRIAL STANDARD LEVELS FOR CAPACITOR-START SMALL ELECTRIC MOTORS (2015–2045)

| TSL | Consumer NPV at 7% discount rate added with: | | | |
|---|---|---|---|---|
| | $CO_2$ value of $4.7/metric ton $CO_2$* and low values for $NO_X$ and Hg** billion 2009$ | $CO_2$ value of $21.4/metric ton $CO_2$* and medium values for $NO_X$ and Hg*** billion 2009$ | $CO_2$ value of $35.1/metric ton $CO_2$* and medium values for $NO_X$ and Hg*** billion 2009$ | $CO_2$ value of $64.9/metric ton $CO_2$* and high values for $NO_X$ and Hg**** billion 2009$ |
| 1 | 3.23 | 4.15 | 4.93 | 6.46 |
| 2 | 3.27 | 4.20 | 4.99 | 6.53 |
| 3 | 3.08 | 4.13 | 5.02 | 6.76 |
| 4 | 2.25 | 3.43 | 4.43 | 6.39 |
| 5 | 2.36 | 3.55 | 4.56 | 6.52 |
| 6 | (8.98) | (7.69) | (6.59) | (4.43) |
| 7 | 5.08 | 6.50 | 7.70 | 10.05 |
| 8 | 3.42 | 5.05 | 6.44 | 9.14 |

TABLE VI.43—ESTIMATES OF ADDING NET PRESENT VALUE OF CONSUMER SAVINGS (AT 3% DISCOUNT RATE) TO NET PRESENT VALUE OF LOW, CENTRAL, AND HIGH-END GLOBAL MONETIZED BENEFITS FROM $CO_2$, $NO_X$, AND HG EMISSIONS REDUCTIONS AT ALL TRIAL STANDARD LEVELS FOR CAPACITOR-START SMALL ELECTRIC MOTORS (2015–2045)

| TSL | Consumer NPV at 3% discount rate added with: | | | |
|---|---|---|---|---|
| | $CO_2$ value of $4.7/metric ton $CO_2$* and low values for $NO_X$ and Hg** billion 2009$ | $CO_2$ value of $21.4/metric ton $CO_2$* and medium values for $NO_X$ and Hg*** billion 2009$ | $CO_2$ value of $35.1/metric ton $CO_2$* and medium values for $NO_X$ and Hg*** billion 2009$ | $CO_2$ Value of $64.9/metric ton $CO_2$* and high values for $NO_X$ and Hg**** billion 2009$ |
| 1 | 7.26 | 8.21 | 8.99 | 10.54 |
| 2 | 7.36 | 8.32 | 9.11 | 10.68 |
| 3 | 7.13 | 8.21 | 9.10 | 10.88 |
| 4 | 5.64 | 6.85 | 7.86 | 9.85 |
| 5 | 5.86 | 7.08 | 8.09 | 10.10 |
| 6 | (15.91) | (14.58) | (13.48) | (11.28) |
| 7 | 11.43 | 12.89 | 14.09 | 16.49 |
| 8 | 8.54 | 10.22 | 11.61 | 14.37 |

* These label values per ton represent the global negative externalities of $CO_2$ in 2010, in 2007$. Their present values have been calculated with scenario-consistent discount rates. See section IV.M for a full discussion of the derivation of these values.
** Low Values correspond to $447 per ton of $NO_X$ emissions and $0.764 million per ton of Hg emissions.
*** Medium Values correspond to $2,519 per ton of $NO_X$ emissions and $17.2 million per ton of Hg emissions.
**** High Values correspond to $4,591 per ton of $NO_X$ emissions and $33.7 million per ton of Hg emissions.

7. Other Factors

In developing today's standards, the Secretary took into consideration the following additional factors: (1) Harmonization of standards for small electric motors with existing standards under EPCA for medium-sized polyphase general purpose motors; (2) the impact, on consumers who need to use CSIR motors, of substantially higher prices for such motors caused by some

potential standard levels; and (3) the potential for standards to reduce reactive power, and thereby cause lower costs for supplying electricity.

*D. Conclusion*

EPCA contains criteria for prescribing new or amended energy conservation standards. DOE must prescribe standards only for those small electric motors for which DOE: (1) Has determined that standards would be technologically feasible and economically justified and would result in significant energy savings, and (2) has prescribed test procedures. (42 U.S.C. 6295(o)(2)(B), 6316(a), and 6317(b)) Moreover, any standards for this equipment must achieve the maximum improvement in energy efficiency that is technologically feasible and economically justified. (42 U.S.C. 6295(o)(2)(A) and 6316(a)) In determining whether a standard is economically justified, DOE must determine whether the benefits of the standard exceed its burdens when considering the seven factors discussed in section III.D.1. (42 U.S.C. 6295(o)(2)(B)(i) and 6316(a))

In evaluating standards for small electric motors, DOE analyzed polyphase and capacitor-start motors independently of one another, and considered eight TSLs for polyphase equipment and eight TSLs for capacitor-start equipment. For reasons explained in the NOPR, DOE combined CSCR and CSIR motors into a single set of TSLs for capacitor-start motors, with each TSL being a combination of CSIR and CSCR efficiency levels. 74 FR 61484.

In selecting today's energy conservation standards for small electric motors, DOE started by examining the TSL with the highest energy savings, and determined whether that TSL was economically justified. Upon finding a TSL not to be justified, DOE considered sequentially lower TSLs until it identified the highest level that was economically justified. (Such level would necessarily also be technologically feasible and result in a significant conservation of energy because all of the TSLs considered for this final rule meet those criteria.) DOE notes that for polyphase small electric motors, the TSL with the highest energy savings is also the max-tech efficiency level, but, as explained in the NOPR, the same is not true for capacitor-start motors. 74 FR 61484.

Table VI.44 and Table VI.45 summarize the results of DOE's quantitative analysis, based on the assumptions and methodology discussed above, of each TSL DOE considered for this rule. They will aid the reader in the discussion of costs and benefits of each TSL. In some cases, the tables present a range of results. The range of values reported for industry impacts represents the results for the two markup scenarios—preservation-of-return-on-invested-capital and preservation-of-operating-profit (absolute dollars)—that DOE used to estimate manufacturer impacts.

In addition to the quantitative results, DOE also considers other burdens and benefits that affect economic justification. These include pending standards for medium motors as a result of EISA 2007.

1. Polyphase Small Electric Motors

Table VI.44 presents a summary of the quantitative analysis results for each TSL for polyphase small electric motors.

TABLE VI.44—SUMMARY OF POLYPHASE SMALL ELECTRIC MOTORS ANALYTICAL RESULTS *

| Criteria | Trial standard level | | | | | | | |
|---|---|---|---|---|---|---|---|---|
| | TSL 1 | TSL 2 | TSL 3 | TSL 4 | TSL 4b | TSL 5 | TSL 6 | TSL 7 |
| Primary Energy Savings (quads) | 0.05 | 0.09 | 0.17 | 0.19 | 0.29 | 0.34 | 0.37 | 0.37 |
| @ 7% Discount Rate | 0.01 | 0.02 | 0.04 | 0.05 | 0.07 | 0.09 | 0.09 | 0.09 |
| @ 3% Discount Rate | 0.03 | 0.05 | 0.09 | 0.10 | 0.15 | 0.18 | 0.19 | 0.20 |
| Generation Capacity Reduction (GW) | 0.05 | 0.09 | 0.16 | 0.19 | 0.31 | 0.36 | 0.39 | 0.42 |
| NPV (2009$ billions) | | | | | | | | |
| @ 7% discount | 0.10 | 0.22 | 0.41 | 0.42 | 0.54 | 0.16 | (0.22) | (6.82) |
| @ 3% discount | 0.26 | 0.55 | 1.01 | 1.05 | 1.44 | 0.77 | (0.06) | (12.65) |
| Industry Impacts | | | | | | | | |
| Change in INPV (2009$ millions) | (0.19)–(1.49) | 0.34–(1.86) | 0.98–(2.26) | 0.57–(3.58) | 3.37–(5.43) | 12.62–(11.80) | 18.54–(17.51) | 95.27–(69.47) |
| Change in INPV (%) | (0.27)–(2.15) | 0.49–(2.67) | 1.41–(3.25) | 0.82–(5.15) | 4.84–(7.80) | 18.15–(16.96) | 26.65–(25.16) | 136.95–(99.85) |
| Cumulative Emission Reduction | | | | | | | | |
| $CO_2$ (Mt) | 2.3 | 4.6 | 8.3 | 9.3 | 15.4 | 18.3 | 19.5 | 21.2 |
| Value of $CO_2$ reductions (2009$ millions) ** | 8–122 | 16–248 | 28–445 | 32–502 | 52–828 | 62–986 | 66–1049 | 72–1144 |
| $NO_X$ (kt) | 1.6 | 3.3 | 5.9 | 6.7 | 11.0 | 13.1 | 13.9 | 15.2 |
| Value of $NO_X$ reductions at 7% discount rate (2009$ millions) | 0.11–1.18 | 0.23–2.39 | 0.42–4.29 | 0.47–4.84 | 0.78–7.99 | 0.92–9.51 | 0.98–10.11 | 1.07–11.03 |
| Value of $NO_X$ reductions at 3% discount rate (2009$ millions) | 0.34–3.46 | 0.68–7.01 | 1.22–12.59 | 1.38–14.21 | 2.28–23.45 | 2.71–27.90 | 2.89–29.68 | 3.15–32.37 |
| Hg (t) | 0.013 | 0.025 | 0.046 | 0.051 | 0.085 | 0.101 | 0.108 | 0.117 |
| Value of Hg reductions at 7% discount rate (2009$ millions) | 0.00–0.12 | 0.01–0.25 | 0.01–0.45 | 0.01–0.51 | 0.02–0.84 | 0.02–1.00 | 0.02–1.06 | 0.03–1.16 |
| Value of Hg reductions at 3% discount rate (2009$ millions) | 0.01–0.24 | 0.01–0.48 | 0.02–0.87 | 0.02–0.98 | 0.04–1.62 | 0.04–1.93 | 0.05–2.05 | 0.05–2.24 |
| Life-cycle Cost of Rep. Product Class | | | | | | | | |
| Customers with increase in LCC (%) | 46.8 | 41.3 | 40.6 | 45.1 | 51.2 | 65.8 | 77.4 | 96.8 |
| Customers with savings in LCC (%) | 53.2 | 58.7 | 59.4 | 54.9 | 48.8 | 34.3 | 22.6 | 3.2 |
| Mean LCC (2009$) | 1,261 | 1,249 | 1,237 | 1,240 | 1,240 | 1,291 | 1,339 | 2,095 |
| Mean LCC Savings (2009$) | 8 | 19 | 31 | 29 | 28 | (23) | (71) | (827) |

TABLE VI.44—SUMMARY OF POLYPHASE SMALL ELECTRIC MOTORS ANALYTICAL RESULTS *—Continued

| Criteria | Trial standard level | | | | | | | |
|---|---|---|---|---|---|---|---|---|
| | TSL 1 | TSL 2 | TSL 3 | TSL 4 | TSL 4b | TSL 5 | TSL 6 | TSL 7 |
| Life-cycle Cost of all Product Classes, Weighted by Shipments | | | | | | | | |
| Customers with increase in LCC (%) | 44.7 | 39.2 | 38.7 | 42.7 | 49.2 | 63.2 | 74.8 | 96.2 |
| Customers with savings in LCC (%) | 55.3 | 69.8 | 61.3 | 57.3 | 50.8 | 36.8 | 25.2 | 3.8 |
| Mean LCC (2009$) | 1,314 | 1,302 | 1,287 | 1,289 | 1,288 | 1,337 | 1,383 | 2,131 |
| Mean LCC Savings (2009$) | 9 | 22 | 36 | 34 | 36 | (13) | (60) | (808) |
| Payback Period (years) | | | | | | | | |
| Average | 21.1 | 17.3 | 17.2 | 19.8 | 24.1 | 40.2 | 52.6 | 234.6 |
| Median | 6.7 | 5.4 | 5.3 | 6.2 | 7.4 | 11.7 | 16.1 | 48.7 |
| Employment Impact | | | | | | | | |
| Indirect Impacts (2045) (jobs, '000) | 0.30 | 0.57 | 1.03 | 1.18 | 1.94 | 2.67 | 3.22 | 6.34 |

* Parentheses indicate negative (−) values. For LCCs, a negative value means an increase in LCC by the amount indicated.
** Range of global values for the SCC of emissions reductions, representing a range of scenarios as described in section IV.M and summarized in Table VI.31, with discount rates ranging from 2.5% to 5%.

First, DOE considered TSL 7, the most efficient level for polyphase small electric motors. TSL 7 would save an estimated 0.37 quad of energy through 2045, an amount DOE considers significant. Discounted at seven percent, the projected energy savings through 2045 would be 0.09 quad. For the Nation as a whole, DOE projects that TSL 7 would result in a net decrease of $6.82 billion in NPV, using a discount rate of seven percent. The emissions reductions at TSL 7 are 21.2 Mt of $CO_2$, up to 15.2 kt of $NO_X$, and up to 0.117 ton of Hg. These reductions have a value of up to $1,144 million for $CO_2$ (using the 95th percentile value at a 3 percent discount rate), and a value of up to $11.0 million for $NO_X$, and $1.16 million for Hg at a discount rate of seven percent. At the central value for the social cost of carbon, the estimated monetized benefit of $CO_2$ emissions reductions is $375 million at a discount rate of three percent. DOE also estimates that at TSL 7, total electric generating capacity in 2030 will decrease compared to the base case by 0.42 GW.

At TSL 7, DOE projects that the average polyphase small electric motor customer purchasing equipment in 2015 will experience an increase in LCC of $827 compared to the baseline. DOE estimates the fraction of customers experiencing LCC increases will be 96.8 percent. The median PBP for the average polyphase small electric motor customer at TSL 7, 48.7 years, is projected to be substantially longer than the mean lifetime of the equipment. When all polyphase product classes are considered and weighted by shipments, DOE estimates that small electric motor customers experience slightly lower increases in LCC of $808.

The projected change in industry value ranges from a decrease of $69.5 million to an increase of $95.3 million. The impacts are driven primarily by the assumptions regarding the ability to pass on larger increases in MPCs to the customer. At TSL 7, DOE recognizes the risk of very large negative impacts if manufacturers' expectations about reduced profit margins are realized. In particular, if the high end of the range of impacts is reached as DOE expects, TSL 7 could result in a net loss of 99.9 percent in INPV to the polyphase small motor industry. DOE believes manufacturers would likely have a more difficult time maintaining current gross margin levels with larger increases in manufacturing production costs, as standards increase the need for capital conversion costs, equipment retooling, and increased research and development spending. Specifically, at this TSL, the majority of manufacturers would need to significantly redesign all of their polyphase small electric motors.

After carefully considering the analysis and weighing the benefits and burdens of TSL 7, the Secretary has reached the following conclusion: At TSL 7, the benefits of energy savings, emissions reductions (both in physical reductions and the monetized value of those reductions), would be outweighed by the economic burden of a net cost to the Nation (over 30 years), the economic burden to customers (as indicated by the large increase in life-cycle cost) and the potentially large reduction in INPV for manufacturers resulting from large conversion costs and reduced gross margins. Consequently, the Secretary has concluded that trial standard level 7 is not economically justified.

DOE then considered TSL 6, which would likely save an estimated 0.37 quad of energy through 2045, an amount DOE considers significant. Discounted at seven percent, the projected energy savings through 2045 would be 0.09 quad. For the Nation as a whole, DOE projects that TSL 6 would result in a net decrease of $220 million in NPV, using a discount rate of seven percent. The estimated emissions reductions at TSL 6 are 19.5 Mt of $CO_2$, up to 13.9 kt of $NO_X$, and up to 0.108 ton of Hg. These reductions have a value of up to $1,049 million for $CO_2$ (using the 95th percentile value at a 3 percent discount rate), and a value of up to $10.1 million for $NO_X$, and $1.06 million for Hg, at a discount rate of seven percent. At the central value for the social cost of carbon, the estimated monetized benefit of $CO_2$ emissions reductions is $344 million at a discount rate of three percent. Total electric generating capacity in 2030 is estimated to decrease compared to the base case by 0.39 GW under TSL 6.

At TSL 6, DOE projects that the average polyphase small electric motor customer purchasing equipment in 2015 will experience an increase in LCC of $71 compared to the baseline. DOE estimates the fraction of customers experiencing LCC increases will be seven percent. The median PBP for the average polyphase small electric motor customer at TSL 6, 16.1 years, is projected to be substantially longer than the mean lifetime of the equipment. When all polyphase product classes are considered and weighted by shipments, DOE estimates that small electric motor customers experience slightly lower increases in LCC of $60.

The projected change in industry value ranges from a decrease of $17.5 million to an increase of $18.5 million. The impacts are driven primarily by the

assumptions regarding the ability to pass on larger increases in MPCs to the customer. At TSL 6, DOE recognizes the risk of very large negative impacts if manufacturers' expectations about reduced profit margins are realized. In particular, if the high end of the range of impacts is reached as DOE expects, TSL 6 could result in a net loss of 25.2 percent in INPV to the polyphase small motor industry. DOE believes manufacturers would likely have a more difficult time maintaining current gross margin levels with larger increases in manufacturing production costs, as standards increase the need for capital conversion costs, equipment retooling, and increased research and development spending. Specifically, at this TSL, the majority of manufacturers would need to significantly redesign all of their polyphase small electric motors.

After carefully considering the analysis and weighing the benefits and burdens of TSL 6, the Secretary has reached the following conclusion: At TSL 6, the benefits of energy savings, emissions reductions (both in physical reductions and the monetized value of those reductions), would be outweighed by the economic burden of a net cost to the Nation (over 30 years), the economic burden to consumers (as indicated by the increased life-cycle cost), and the potential reduction in INPV for manufacturers resulting from large conversion costs and reduced gross margins. Consequently, the Secretary has concluded that trial standard level 6 is not economically justified.

DOE then considered TSL 5, which provides for polyphase small electric motors the maximum efficiency level that the analysis showed to have positive NPV for the Nation. TSL 5 would likely save an estimated 0.34 quad of energy through 2045, an amount DOE considers significant. Discounted at seven percent, the projected energy savings through 2045 would be 0.09 quad. For the Nation as a whole, DOE projects that TSL 5 would result in a net increase of $160 million in NPV, using a discount rate of seven percent. The estimated emissions reductions at TSL 5 are 18.3 Mt of $CO_2$, up to 13.1 kt of $NO_X$, and up to 0.101 ton of Hg. These reductions have a value of up to $986 million for $CO_2$ (using the 95th percentile value at a 3 percent discount rate), and a value of up to $9.5 million for $NO_X$, and $1.0 million for Hg, at a discount rate of seven percent. At the central value for the social cost of carbon, the estimated benefit of $CO_2$ emissions reductions is $323 million at a discount rate of three percent. Total electric generating capacity in 2030 is estimated to decrease compared to the base case by 0.36 GW under TSL 5.

At TSL 5, DOE projects that the average polyphase small electric motor customer purchasing the equipment in 2015 will experience an increase in LCC of $23 compared to the baseline representative unit for analysis (1 hp, 4 pole polyphase motor). This corresponds to approximately a 1.8 percent increase in average LCC. Based on this analysis, DOE estimates that approximately 66 percent of customers would experience LCC increases and that the median PBP would be 11.7 years, which is longer than the mean lifetime of the equipment. However, in consideration of the relatively small percentage increase in LCC at TSL 5, DOE examined sensitivity analyses to assess the likelihood of consumers in fact experiencing significant LCC increases. These included calculating a shipment-weighted LCC savings.

At TSL 5, when accounting for the full-range of horsepowers and pole configurations of polyphase motors, the average LCC increase is reduced to $13. This corresponds to approximately 63 percent of customers experiencing an increase in LCC, with the remaining 37 percent, those with greater operating hours, realizing net savings.

The projected change in industry value ranges from a decrease of $11.8 million to an increase of $12.6 million. The impacts are driven primarily by the assumptions regarding the ability to pass on larger increases in MPCs to the customer. At TSL 5, DOE recognizes the risk of negative impacts if manufacturers' expectations about reduced profit margins are realized. If the high end of the range of impacts is reached, TSL 5 could result in a net loss of 17.0 percent in INPV to the polyphase small motor industry.

After carefully considering the analysis and weighing the benefits and burdens of TSL 5, the Secretary has reached the following conclusion: At TSL 5, the benefits of energy savings and emissions reductions (both in physical reductions and the monetized value of those reductions) would be outweighed by the economic burden to consumers (as indicated by the increased life-cycle cost). Consequently, the Secretary has concluded that trial standard level 5 is not economically justified.

DOE then considered TSL 4b, which is at an efficiency level added to the analysis in response to comments presented on the NOPR. TSL 4b would likely save an estimated 0.29 quad of energy through 2045, an amount DOE considers significant. Discounted at seven percent, the projected energy savings through 2045 would be 0.07 quad. For the Nation as a whole, DOE projects that TSL 4b would result in a net increase of $540 million in NPV, using a discount rate of seven percent. The estimated emissions reductions at TSL 4b are 15.4 Mt of $CO_2$, up to 11.0 kt of $NO_X$, and up to 0.085 ton of Hg. These reductions have a value of up to $828 million for $CO_2$ (using the 95th percentile value at a 3 percent discount rate), and a value of up to $8.0 million for $NO_X$, and $0.8 million for Hg, at a discount rate of seven percent. At the central value for the social cost of carbon, the estimated benefit of $CO_2$ emissions reductions is $272 million at a discount rate of three percent. Total electric generating capacity in 2030 is estimated to decrease compared to the base case by 0.31 GW under TSL 4b.

At TSL 4b, DOE projects that the average polyphase small electric motor customer purchasing the equipment in 2015 will experience a reduction in LCC of $28 compared to the baseline representative unit for analysis (1 hp, 4 pole polyphase motor). This corresponds to approximately a 2.2 percent reduction in average LCC. Based on this analysis, DOE estimates that approximately 51 percent of customers would experience LCC increases and that the median PBP would be 7.4 years, which is only slightly longer than the mean lifetime of the equipment. However, in consideration of the relatively small percentage decrease in LCC at TSL 4b, DOE examined sensitivity analyses to assess the likelihood of consumers experiencing significant LCC increases. These included calculating a shipment-weighted LCC savings.

At TSL 4b, when accounting for the full-range of horsepowers and pole configurations of polyphase motors, the average LCC savings increase to $36. This corresponds to approximately 49 percent of customers experiencing an increase in LCC, with the remaining 51 percent realizing net savings.

The projected change in industry value ranges from a decrease of $5.4 million to an increase of $3.4 million. The impacts are driven primarily by the assumptions regarding the ability to pass on larger increases in MPCs to the customer. At TSL 4b, DOE recognizes the risk of negative impacts if manufacturers' expectations about reduced profit margins are realized. If the high end of the range of impacts is reached, TSL 4b could result in a net loss of 7.8 percent in INPV to the polyphase small motor industry.

Trial standard level 4b has other advantages that are not directly economic. This level sets standards for

many product classes that are approximately harmonized with the efficiency level for medium motors to be implemented in 2010 which requires four-pole, 1-hp polyphase motors to be at least 85.5% efficient. Since many—but not all—three digit frame size polyphase motors of this size can also be used in two-digit frames with minimal adjustment, DOE believes that there is a benefit to harmonizing small polyphase and medium polyphase motor efficiency standards in this size range. In particular, DOE does not believe the design changes necessary for TSL 4b would force all manufacturers to significantly redesign all of their polyphase small electric motors or their production processes. Therefore, DOE believes manufacturers are not at a significant risk to experience highly negative impacts.

After considering the analysis and the benefits and burdens of trial standard level 4b, the Secretary has reached the following conclusion: Trial standard level 4b offers the maximum improvement in energy efficiency that is technologically feasible and economically justified, and will result in significant conservation of energy. The Secretary has reached the conclusion that the benefits of energy savings and emissions reductions (both in physical reductions and the monetized value of those reductions) outweigh the potential reduction in INPV for manufacturers and the economic burden on consumers, which is relatively small on average. Therefore, DOE today adopts the energy conservation standards for polyphase small electric motors at trial standard level 4b.

2. Capacitor-Start Small Electric Motors

Table VI.45 presents a summary of the quantitative analysis results for each TSL for capacitor-start small electric motors.

TABLE VI.45—SUMMARY OF CAPACITOR-START SMALL ELECTRIC MOTORS ANALYTICAL RESULTS *

| Criteria | Trial standard level | | | | | | | |
|---|---|---|---|---|---|---|---|---|
| | TSL 1 | TSL 2 | TSL 3 | TSL 4 | TSL 5 | TSL 6 | TSL 7 | TSL 8 |
| Primary Energy Savings (quads) | 1.18 | 1.19 | 1.36 | 1.47 | 1.47 | 1.61 | 1.91 | 2.33 |
| @ 7% Discount Rate | 0.31 | 0.31 | 0.36 | 0.39 | 0.39 | 0.43 | 0.51 | 0.62 |
| @ 3% Discount Rate | 0.63 | 0.64 | 0.73 | 0.79 | 0.79 | 0.87 | 1.03 | 1.25 |
| Generation Capacity Reduction (GW) | 1.21 | 1.22 | 1.38 | 1.54 | 1.55 | 1.70 | 1.86 | 2.14 |
| NPV (2009$ billions) | | | | | | | | |
| @ 7% discount | 3.01 | 3.05 | 2.83 | 1.97 | 2.08 | (9.29) | 4.74 | 3.03 |
| @ 3% discount | 7.03 | 7.13 | 6.87 | 5.35 | 5.57 | (16.23) | 11.08 | 8.14 |
| Industry Impacts | | | | | | | | |
| Change in INPV (2009$ millions) | 8.40–(19.99) | 9.46–(20.79) | 16.27–(32.42) | 32.15–(42.15) | 28.48–(40.09) | 186.60–(152.05) | 18.40–(34.05) | 46.35–(52.58) |
| Change in INPV (%) | 3.01–(7.16) | 3.39–(7.45) | 5.83–(11.62) | 11.52–(15.46) | 10.20–(14.37) | 66.87–(54.49) | 6.59–(12.20) | 16.61–(18.84) |
| Cumulative Emission Reduction | | | | | | | | |
| $CO_2$ (Mt) | 6.29 | 63.5 | 71.7 | 80.5 | 81.0 | 88.5 | 96.8 | 111.4 |
| Value of $CO_2$ reductions (2009$ millions) ** | 216–3410 | 218–3444 | 246–3890 | 277–4367 | 278–4394 | 304–4801 | 333–5253 | 383–6046 |
| $NO_X$ (kt) | 45.1 | 45.54 | 51.44 | 57.74 | 58.11 | 63.48 | 69.47 | 79.95 |
| Value of $NO_X$ reductions at 7% discount rate (2009$ millions) | 3.5–36.0 | 3.5–36.2 | 4.0–41.0 | 4.5–46.0 | 4.5–46.3 | 4.9–50.6 | 5.4–55.4 | 6.2–63.8 |
| Value of $NO_X$ reductions at 3% discount rate (2009$ millions) | 9.6–98.7 | 9.7–100.0 | 11.0–112.6 | 12.3–126.4 | 12.4–127.2 | 13.5–138.9 | 14.8–152.0 | 17.0–175.0 |
| Hg (t) | 0.265 | 0.267 | 0.302 | 0.339 | 0.341 | 0.373 | 0.408 | 0.469 |
| Value of Hg reductions at 7% discount rate (2009$ millions) | 0.06–2.79 | 0.06–2.82 | 0.07–3.18 | 0.08–3.57 | 0.08–3.60 | 0.09–3.93 | 0.10–4.30 | 0.11–4.95 |
| Value of Hg reductions at 3% discount rate (2009$ millions) | 0.12–5.22 | 0.12–5.27 | 0.13–5.95 | 0.15–6.68 | 0.15–6.72 | 0.17–7.34 | 0.18–8.04 | 0.21–9.25 |
| Life-cycle Cost of Rep. Product Class | | | | | | | | |
| CSIR | | | | | | | | |
| Customers with increase in LCC (%) | 32.0 | 32.0 | 41.6 | 54.9 | 54.9 | 65.6 | 65.6 | 65.6 |
| Customers with savings in LCC (%) | 68.0 | 68.0 | 58.4 | 45.1 | 45.1 | 34.5 | 34.5 | 34.5 |
| Mean LCC (2009$) | 857 | 857 | 868 | 902 | 902 | 1,285 | 1,285 | 1,285 |
| Mean LCC Savings (2009$) | 58 | 58 | 47 | 13 | 13 | (369) | (369) | (369) |
| CSCR | | | | | | | | |
| Customers with increase in LCC (%) | 46.5 | 47.8 | 47.8 | 54.9 | 47.8 | 98.6 | 47.8 | 74.7 |
| Customers with savings in LCC (%) | 53.6 | 52.2 | 52.2 | 45.1 | 52.2 | 1.4 | 52.2 | 25.3 |
| Mean LCC (2009$) | 1,005 | 1,002 | 1,002 | 1,015 | 1,002 | 1,856 | 1,002 | 1,078 |
| Mean LCC Savings (2009$) | 21 | 24 | 24 | 11 | 24 | (830) | 24 | (52) |
| CSIR migrating to CSCR weighted results *** | | | | | | | | |
| Customers with increase in LCC (%) | 32.5 | 32.5 | 41.7 | 55.0 | 55.0 | 66.0 | 53.7 | 60.6 |
| Customers with savings in LCC (%) | 67.5 | 67.5 | 58.3 | 45.0 | 45.0 | 34.0 | 46.3 | 39.4 |
| Mean LCC (2009$) | 854 | 854 | 865 | 899 | 899 | 1,282 | 891 | 917 |

TABLE VI.45—SUMMARY OF CAPACITOR-START SMALL ELECTRIC MOTORS ANALYTICAL RESULTS *—Continued

| Criteria | Trial standard level | | | | | | | |
|---|---|---|---|---|---|---|---|---|
| | TSL 1 | TSL 2 | TSL 3 | TSL 4 | TSL 5 | TSL 6 | TSL 7 | TSL 8 |
| Mean LCC Savings (2009$) | 58 | 58 | 47 | 15 | 15 | (370) | 23 | (3) |
| Life-cycle Cost of all Product Classes, Weighted by Shipments | | | | | | | | |
| CSIR | | | | | | | | |
| Customers with increase in LCC (%) | 30.7 | 30.7 | 40.2 | 54.1 | 54.1 | 65.1 | 65.1 | 65.1 |
| Customers with savings in LCC (%) | 69.3 | 69.3 | 59.8 | 45.9 | 45.9 | 34.9 | 34.9 | 34.9 |
| Mean LCC (2009$) | 859 | 859 | 870 | 903 | 903 | 1,287 | 1,287 | 1,287 |
| Mean LCC Savings (2009$) | 62 | 62 | 51 | 17 | 17 | (367) | (367) | (367) |
| CSCR | | | | | | | | |
| Customers with increase in LCC (%) | 38.4 | 39.7 | 39.7 | 46.1 | 39.7 | 94.7 | 39.7 | 65.0 |
| Customers with savings in LCC (%) | 61.6 | 60.3 | 60.3 | 53.9 | 60.3 | 5.3 | 60.3 | 35.0 |
| Mean LCC (2009$) | 1,299 | 1,289 | 1,289 | 1,304 | 1,289 | 2,228 | 1,289 | 1,364 |
| Mean LCC Savings (2009$) | 50 | 60 | 60 | 45 | 60 | (879) | 60 | (15) |
| Market Share ****—CSIR (%) | 99 | 98 | 98 | 96 | 95 | 100 | 3 | 7 |
| Payback Period (years) | | | | | | | | |
| CSIR | | | | | | | | |
| Average | 10.5 | 10.5 | 15.1 | 24.9 | 24.9 | 108.5 | 108.5 | 108.5 |
| Median | 3.1 | 3.1 | 4.5 | 7.0 | 7.0 | 11.9 | 11.9 | 11.9 |
| CSCR | | | | | | | | |
| Average | 14.8 | 15.3 | 15.3 | 19.5 | 15.3 | 200.0 | 15.3 | 34.8 |
| Median | 4.4 | 4.5 | 4.5 | 5.9 | 4.5 | 37.6 | 4.5 | 10.0 |
| Employment Impact | | | | | | | | |
| Indirect Impacts (2045) (jobs, '000) − | 7.06 | 7.12 | 8.56 | 10.24 | 10.20 | 19.57 | 11.22 | 18.70 |

* Parentheses indicate negative (−) values. For LCCs, a negative value means an increase in LCC by the amount indicated.
** Range of global values for the SCC of emissions reductions, representing a range of scenarios as described in section IV.M and summarized in Table VI.31, with discount rates ranging from 2.5% to 5%.
*** Shipments-weighted based on market share product switching model.
**** Base case market share is 95 percent CSIR and 5 percent CSCR.

First, DOE considered TSL 8, the combination of CSIR and CSCR efficiency levels generating the greatest national energy savings. TSL 8 would likely save an estimated 2.33 quads of energy through 2045, an amount DOE considers significant. Discounted at seven percent, the projected energy savings through 2045 would be 0.62 quad. For the Nation as a whole, DOE projects that TSL 8 would result in a net benefit of $3.03 billion in NPV, using a discount rate of seven percent. The estimated emissions reductions at TSL 8 are up to 111.4 Mt of $CO_2$, up to 80.0 kt of $NO_X$, and up to 0.469 ton of Hg. These reductions have a value of up to $6,046 million for $CO_2$ (using the 95th percentile value at a 3 percent discount rate), and a value of up to $63.8 million for $NO_X$, and $4.95 million for Hg at a discount rate of seven percent. At the central value for the social cost of carbon, the estimated benefit of $CO_2$ emissions reductions is $1,982 million at a discount rate of three percent. DOE also estimates that at TSL 8, total electric generating capacity in 2030 will decrease compared to the base case by 2.14 GW.

At TSL 8, DOE projects that for the average customer, compared to the baseline, the LCC of a CSIR and CSCR motor will increase by $369 and $52, respectively. At TSL 8, DOE estimates the fraction of customers experiencing LCC increases will be 66 percent for CSIR motors and 75 percent for CSCR motors. The median PBP for the average capacitor-start small electric motor customers at TSL 8, 11.9 years for CSIR motors and 10.0 years for CSCR motors, is projected to be substantially longer than the mean lifetime of the equipment. DOE also considered market migration between CSIR and CSCR users and how that would affect the LCC of CSIR users at TSL 8. DOE estimates that at this TSL it will be more cost-effective for many CSIR consumers to purchase a CSCR motor instead, with only a slight $3 increase in the average LCC over that of the baseline CSIR motor. In total, 61 percent of consumers who migrate from a CSIR to a CSCR motor will experience LCC increases.

DOE also examined LCC savings using a full distribution of motor sizes and speeds. Under these conditions, for the average customer, the LCC of a CSIR and CSCR motor will increase by $367 and $15, respectively, compared to the baseline. At TSL 8, DOE estimates the fraction of customers experiencing LCC increases will be 65 percent for both CSIR and CSCR motors.

The projected change in industry value ranges from a decrease of $52.58 million to an increase of $46.35 million. The impacts are driven primarily by the assumptions regarding the ability to pass on larger increases in MPCs to the customer as well as the necessary estimated investments. At TSL 8, DOE recognizes the risk of negative impacts if manufacturers' expectations about reduced profit margins are realized. In particular, if the high end of the range of impacts is reached as DOE expects, TSL 8 could result in a net loss of 18.84 percent in INPV to the capacitor-start small motor industry. DOE believes manufacturers would likely have a more difficult time maintaining current gross margin levels with larger increases in manufacturing production costs, as standards increase the need for capital conversion costs, equipment retooling, and increased research and development spending. Specifically, at this TSL, the majority of manufacturers would need to significantly redesign all of their capacitor-start small electric motors.

After carefully considering the analysis and weighing the benefits and

burdens of TSL 8, the Secretary has reached the following conclusion: At TSL 8, the benefits of energy savings, emissions reductions (both in physical reductions and the monetized value of those reductions), and the positive net economic savings (over 30 years) would be outweighed by the economic burden on existing CSCR customers and CSIR customers who do not migrate from CSIR to CSCR motors (as indicated by the large increase in LCC) and the potentially large reduction in INPV for manufacturers resulting from large conversion costs and reduced gross margins. Consequently, the Secretary has concluded that trial standard level 8 is not economically justified.

DOE then considered TSL 7, which would likely save an estimated 1.91 quads of energy through 2045, an amount DOE considers significant. Discounted at seven percent, the projected energy savings through 2045 would be 0.51 quad. For the Nation as a whole, DOE projects that TSL 7 would result in a net benefit of $4.74 billion in NPV, using a discount rate of seven percent. The estimated emissions reductions at TSL 7 are up to 96.8 Mt of $CO_2$, up to 69.5 kt of $NO_X$, and up to 0.408 ton of Hg. These reductions have a value of up to $5,253 million for $CO_2$ (using the 95th percentile value at a 3 percent discount rate), and a value of up to $55.4 million for $NO_X$, and $4.30 million for Hg at a discount rate of seven percent. At the central value for the social cost of carbon, the estimated benefit of $CO_2$ emissions reductions is $1,722 million at a discount rate of three percent. Total electric generating capacity in 2030 is estimated to decrease compared to the base case by 1.86 GW under TSL 7.

At TSL 7, DOE projects that for the average customer, the LCC of capacitor-start small electric motors will increase by $369 for CSIR motors and decrease by $24 for CSCR motors compared to the baseline. At TSL 7, DOE estimates the fraction of CSIR customers experiencing LCC increases will be 66 percent, but only 48 percent for CSCR motor customers. However, DOE believes that at this TSL, which is the max-tech efficiency level for CSIR motors, the relative difference in cost between a CSIR motor and a CSCR motor becomes substantial and will have large effects on customers. Rather than buy an expensive CSIR motor, those customers whose applications permit them to will purchase a CSCR motor with the same number of poles and horsepower ratings. DOE is unsure of the magnitude of the migration of CSIR users to CSCR motors, but estimates that customers that purchase a CSCR motor rather than a CSIR motor will reduce their LCC by $23 on average, compared to the baseline CSIR motor. On a national level, DOE estimates that the market share of CSCR motors could grow from 5 percent of all capacitor-start motors to 97 percent once the compliance date for these standards is effective. Even though switching from a CSIR to a CSCR motor would result in a reduction in LCC on average, DOE estimates that approximately 54 percent of CSIR customers that switch would still experience an LCC increase.

DOE also examined LCC savings with a full distribution of motor sizes and speeds. Under these conditions, for the average customer, compared to the baseline, the LCC of a CSIR and CSCR motor will increase by $367 and decrease by $60, respectively. DOE also examined what fraction of motors would have increases in LCC. At TSL 7, DOE estimates that 65 percent of CSIR motor customers who do not switch to CSCR motors, and 40 percent of CSCR motor customers, will experience increased LCC.

The projected change in industry value ranges from a decrease of $34.05 million to an increase of $18.40 million. The impacts are driven primarily by the assumptions regarding the ability to pass on larger increases in MPCs to the customer as well as the necessary estimated investments. At TSL 7, DOE recognizes the risk of negative impacts if manufacturers' expectations about reduced profit margins are realized. In particular, if the high end of the range of impacts is reached as DOE expects, TSL 7 could result in a net loss of 12.20 percent in INPV to the capacitor-start small motor industry. At this TSL, the combination of efficiency levels could cause a migration from CSIR motors to CSCR motors; however, DOE believes that the capital conversion costs, equipment retooling and R&D spending associated with this migration would not be severe.

After carefully considering the analysis and weighing the benefits and burdens of TSL 7, the Secretary has reached the following conclusion: Trial standard level 7 offers the maximum improvement in energy efficiency that is technologically feasible and economically justified and will result in significant conservation of energy. The Secretary has reached the conclusion that the benefits of energy savings, emissions reductions (both in physical reductions and the monetized value of those reductions), the positive net economic savings to the Nation (over 30 years) and the harmonization of efficiency requirements between CSIR and CSCR motors would outweigh the potential reduction in INPV for manufacturers and the economic burden on those CSIR customers who are unable to switch to CSCR motors. Further, benefits from carbon dioxide reductions (at a central value calculated using a three percent discount rate) would increase NPV by $1,722 million (2009$). These benefits from carbon dioxide emission reductions, when considered in conjunction with the consumer savings NPV and other factors described above support DOE's tentative conclusion that trial standard level 7 is economically justified. Therefore, DOE today adopts the energy conservation standards for capacitor-start small electric motors at trial standard level 7.

## VII. Procedural Issues and Regulatory Review

### *A. Review Under Executive Order 12866*

Section 1(b)(1) of Executive Order 12866, "Regulatory Planning and Review," 58 FR 51735 (October 4, 1993), requires each agency to identify the problem the agency intends to address that warrants new agency action (including, where applicable, the failures of private markets or public institutions), as well as assess the significance of that problem, to enable assessment of whether any new regulation is warranted. EPCA requires DOE to establish standards for the small motors covered in today's rulemaking. In addition, today's standards also address the following: (1) Misplaced incentives, which separate responsibility for selecting equipment and for paying their operating costs; and (2) Lack of consumer information and/or information processing capability about energy efficiency opportunities. The market for small electric motors is dominated by the presence and actions of OEMs, who sell small electric motors to end-users as a component of a larger piece of equipment. There is a very large diversity of equipment types that use small electric motors and the market for any particular type of equipment may be very small. Consumers lack information and choice regarding the motor component. OEMs and consumers may be more concerned with other aspects of the application system than with selecting the most cost effective motor for the end user. Space constraints may also restrict the ability of the consumer to replace the motor with a more efficient model.

In addition, DOE has determined that today's regulatory action is a "significant regulatory action" under section 3(f)(1) of Executive Order 12866. Accordingly, section 6(a)(3) of the Executive Order required that DOE prepare a regulatory

impact analysis (RIA) on today's final rule and that the Office of Information and Regulatory Affairs (OIRA) in the OMB review this rule. DOE presented to OIRA for review the final rule and other documents prepared for this rulemaking, including the RIA, and has included these documents in the rulemaking record. They are available for public review in the Resource Room of DOE's Building Technologies Program, 950 L'Enfant Plaza, SW., Suite 600, Washington, DC 20024, (202) 586–2945, between 9 a.m. and 4 p.m., Monday through Friday, except Federal holidays.

The NOPR contained a summary of the RIA, which evaluated the extent to which major alternatives to standards for small electric motors could achieve significant energy savings at reasonable cost, as compared to the effectiveness of the proposed rule. 74 FR 61493–96. The complete RIA (Regulatory Impact Analysis for Proposed Energy Conservation Standards for Small Electric Motors) is contained in the TSD prepared for today's rule. The RIA consists of: (1) A statement of the problem addressed by this regulation and the mandate for government action, (2) a description and analysis of the feasible policy alternatives to this regulation, (3) a quantitative comparison of the impacts of the alternatives, and (4) the national economic impacts of today's standards.

The major alternatives DOE analyzed were: (1) No new regulatory action; (2) financial incentives, including tax credits and rebates; (3) revisions to voluntary energy efficiency targets; and (4) bulk government purchases. DOE evaluated each alternative in terms of its ability to achieve significant energy savings at reasonable costs, and compared it to the effectiveness of the proposed rule.

TABLE VII.1—NON-REGULATORY ALTERNATIVES FOR SMALL ELECTRIC MOTORS

| Policy alternatives | Energy savings quads * | Net present value† billion $ | |
|---|---|---|---|
| | | 7% Discount rate | 3% Discount rate |
| No New Regulatory Action | 0.00 | 0.00 | 0.00 |
| Consumer Rebates at TSL 4b (Polyphase) and TSL 3 (Single-Phase) | 0.17 | 0.49 | 1.13 |
| Consumer Rebates at TSL 4b (Polyphase) and TSL 2 (Single-Phase) | 0.27 | 0.72 | 1.69 |
| Consumer Rebates at TSL 4b (Polyphase) and TSL 3 (Capacitor-Start Capacitor-Run Only) | 0.60 | 1.76 | 4.03 |
| Consumer Tax Credits | 0.11 | 0.35 | 0.80 |
| Manufacturer Tax Credits | 0.07 | 0.25 | 0.56 |
| Voluntary Efficiency Targets | 0.42 | 0.95 | 2.29 |
| Bulk Government Purchases | 0.18 | 0.44 | 1.04 |
| Proposed Standards at TSL 4b (Polyphase) and TSL 7 (Capacitor-Start) | 2.20 | 5.28 | 12.52 |

* Energy savings are in source quads from 2015 and 2045.
† Net present value (NPV) is the value of a time series of costs and savings. DOE determined the NPV from 2015 to 2065 in billions of 2009$.

The net present value amounts shown in Table VII.1 refer to the NPV for consumers. The costs to the government of each policy (such as rebates or tax credits) are not included in the costs for the NPV since, on balance, consumers are both paying for (through taxes) and receiving the benefits of the payments. For each of the policy alternatives other than standards, Table VII.1 shows the energy savings and NPV in the case where the CSIR and CSCR market share shift in response to the policy prior to 2015, or immediately in 2015 when compliance with the standards would be required. The NES and NPV in the case of the proposed standard are shown as a range between this scenario and a scenario in which the market shift takes ten years to complete, and begins in 2015 . The following paragraphs discuss each of the policy alternatives listed in Table VII.1. (For more details see TSD, RIA.)

*No new regulatory action.* The case in which no regulatory action is taken with regard to small electric motors constitutes the "base case" (or "No Action") scenario. In this case, between 2015 and 2045, capacitor-start small electric motors purchased in or after 2015 are expected to consume 1.91 quads of primary energy (in the form of losses), while polyphase small electric motors purchased in or after 2015 are expected to consume 0.29 quad of primary energy. Since this is the base case, energy savings and NPV are zero by definition.

*Rebates.* DOE evaluated the possible effect of a rebate consistent with current motor rebate practices in the promotion of premium efficiency motors which cover a portion of the incremental price difference between equipment meeting baseline efficiency levels and equipment meeting improved efficiency requirements. The current average motor rebate for an efficient 1-horsepower motor is approximately $25, and DOE scaled this rebate to be approximately proportional to the retail price of the motor. DOE evaluated rebates targeting TSL 4b for polyphase motors, and evaluated several target efficiency levels for capacitor-start motors (including TSLs 7, 5, 3, and 2). Existing rebate programs for polyphase motors target three-digit frame series motors with efficiencies equivalent to TSL 4b for small polyphase motors. At rebate efficiency levels corresponding to TSL 7 and 5 for capacitor-start motors, DOE estimates that rebates consistent with current practice would have an insignificant impact on increasing the market share of CSIR motors. For this case, meeting the target level requires the purchase of a motor with a very high average first cost because for TSL 7, CSIR motors are at the maximum technologically feasible efficiency. As a result, rebates targeting TSLs 3 and 2 have larger energy savings. TSLs 7, 5, 3, and 2 correspond to the same efficiency level (EL 3) for CSCR motors.

For rebate programs targeting TSL 4b for polyphase motors and TSL 3 for capacitor start motors, DOE estimates the market share of equipment meeting the energy efficiency levels targeted would increase from 0 percent to 0.4 percent for polyphase motors, from 0 percent to 0.2 percent for capacitor-start, induction-run motors, and from 26.0 to 42.6 percent for capacitor-start, capacitor-run motors. DOE assumed the impact of this policy would be to permanently transform the market so that the shipment-weighted efficiency gain seen in the first year of the program would be maintained throughout the forecast period. At the estimated participation rates, the rebates would provide 0.17 quad of national energy

savings and an NPV of $0.49 billion (at a 7-percent discount rate).

DOE found that a rebate targeting the efficiency levels corresponding to TSL 2 for capacitor-start motors would result in larger energy savings than one targeting the efficiency levels of TSL 3, TSL 5 or TSL 7. Such rebates would increase the market share among capacitor-start induction-run motors meeting the efficiency level corresponding to TSL 2 from 2.0 percent to 11.7 percent. Combined with unchanged polyphase motor rebates targeting TSL 4b, DOE estimates these rebates would provide 0.27 quad of national energy savings and an NPV of $0.72 billion (at a 7-percent discount rate).

DOE also analyzed an alternative rebate program for capacitor-start motors which would give rebates of twice the value of the previously-analyzed rebate for CSCR motors which meet the requirements of TSL 7 (a $50 rebate for a 1 HP motor, scaled to other product classes), and no rebates for CSIR motors. DOE estimates that these rebates would have no effect on the efficiency distribution of capacitor-start induction-run motors, and would increase the market share among capacitor-start capacitor-run motors meeting TSL 7 from 26.0 percent to 89.4 percent. Combined with unchanged polyphase motor rebates at TSL 4b, DOE estimates these rebates would provide 0.60 quad of national energy savings and an NPV of $1.76 billion (at a 7-percent discount rate).

Although DOE estimates that rebates will provide national benefits, they are much smaller than the benefits resulting from national performance standards. Thus, DOE rejected rebates as a policy alternative to national performance standards.

*Consumer Tax Credits.* If customers were offered a tax credit equivalent to the amount mentioned above for rebates, DOE's research suggests that the number of customers buying a small electric motor that would take advantage of the tax credit would be approximately 60 percent of the number that would take advantage of rebates. Thus, as a result of the tax credit, the percentage of customers purchasing the products with efficiencies corresponding to TSL 4b or higher for polyphase motors would increase from 8.0 percent to 15.0 percent; the market share of capacitor-start motors meeting TSL 3 would increase from 0 percent to 0.1 percent for capacitor-start, induction-run motors, and from 26.0 percent to 36.0 percent for capacitor-start, capacitor-run motors. DOE assumed the impact of this policy would be to permanently transform the market so that the shipment-weighted efficiency gain seen in the first year of the program would be maintained throughout the forecast period. DOE estimated that tax credits would yield a fraction of the benefits that rebates would provide. DOE rejected rebates, as a policy alternative to national performance standards, because the benefits that rebates provide are much smaller than those resulting from performance standards. Thus, because consumer tax credits provide even smaller benefits than rebates, DOE also rejected consumer tax credits as a policy alternative to national performance standards.

*Manufacturer Tax Credits.* DOE believes even smaller benefits would result from availability of a manufacturer tax credit program that would effectively result in a lower price to the consumer by an amount that covers part of the incremental price difference between products meeting baseline efficiency levels and those meeting TSL 4b for polyphase small electric motors and TSL 3 for capacitor-start small electric motors. Because these tax credits would go to manufacturers instead of customers, DOE believes that fewer customers would be aware of this program relative to a consumer tax credit program. DOE assumes that 50 percent of the customers who would take advantage of consumer tax credits would buy more-efficient products offered through a manufacturer tax credit program. Thus, as a result of the manufacturer tax credit, the percentage of customers purchasing the more-efficient products would increase from 8.0 percent to 11.5 percent (*i.e.,* 50 percent of the impact of consumer tax credits) for polyphase motors, from 0 percent to 0.1 percent for capacitor-start, induction-run motors, and from 26.0 percent to 31.0 percent for capacitor-start, capacitor-run motors.

DOE assumed the impact of this policy would be to permanently transform the market so that the shipment-weighted efficiency gain seen in the first year of the program will be maintained throughout the forecast period. DOE estimated that manufacturer tax credits would yield a fraction of the benefits that consumer tax credits would provide. DOE rejected consumer tax credits as a policy alternative to national performance standards because the benefits that consumer tax credits provide are much smaller than those resulting from performance standards. Thus, because manufacturer tax credits provide even smaller benefits than consumer tax credits, DOE also rejected manufacturer tax credits as a policy alternative to national performance standards.

*Voluntary Energy-Efficiency Targets.* There are no current Federal or industry marketing efforts to increase the use of efficient small electric motors which meet the requirements of TSL 4b for polyphase small electric motors or TSL 7 for capacitor-start small electric motors. NEMA and the Consortium for Energy Efficiency promote "NEMA Premium" efficient three-digit frame series motors, and DOE analyzed this program as a model for the market effects of a similar program for small electric motors. DOE evaluated the potential impacts of such a program that would encourage purchase of products meeting the trial standard level efficiency levels. DOE modeled the voluntary efficiency program based on this scenario and assumed that the resulting shipment-weighted efficiency gain would be maintained throughout the forecast period. DOE estimated that the enhanced effectiveness of voluntary energy-efficiency targets would provide 0.42 quad of national energy savings and an NPV of $0.95 billion (at a 7-percent discount rate). Although this would provide national benefits, they are much smaller than the benefits resulting from national performance standards. Thus, DOE rejected use of voluntary energy-efficiency targets as a policy alternative to national performance standards.

*Bulk Government Purchases.* Under this policy alternative, the government sector would be encouraged to purchase increased amounts of polyphase equipment that meet the efficiency levels in trial standard level 4b and capacitor-start equipment that meets the efficiency levels in trial standard level 7. Federal, State, and local government agencies could administer such a program. At the Federal level, this would be an enhancement to the existing Federal Energy Management Program (FEMP). DOE modeled this program by assuming an increase in installation of equipment meeting the efficiency levels of the target standard levels among the commercial and public buildings and operations which are run by government agencies. DOE estimated that bulk government purchases would provide 0.18 quad of national energy savings and an NPV of $0.44 billion (at a 7-percent discount rate), benefits which are much smaller than those estimated for national performance standards. DOE rejected bulk government purchases as a policy alternative to national performance standards.

*National Performance Standards.* None of the regulatory alternatives DOE

examined would save as much energy or have an NPV as high as the standards in today's final rule. Also, several of the alternatives would require new enabling legislation, because DOE does not have authority to implement those alternatives. Additional detail on the regulatory alternatives is found in the RIA chapter in the TSD.

*B. Review Under the Regulatory Flexibility Act*

The Regulatory Flexibility Act (5 U.S.C. 601 *et seq.*) requires preparation of an initial regulatory flexibility analysis for any rule that by law must be proposed for public comment, unless the agency certifies that the rule, if promulgated, will not have a significant economic impact on a substantial number of small entities. As required by Executive Order 13272, "Proper Consideration of Small Entities in Agency Rulemaking," 67 FR 53461 (August 16, 2002), DOE published procedures and policies on February 19, 2003, to ensure that the potential impacts of its rules on small entities are properly considered during the rulemaking process. 68 FR 7990. DOE has made its procedures and policies available on the Office of the General Counsel's Web site, *http://www.gc.doe.gov.*

DOE reviewed today's final rule under the provisions of the Regulatory Flexibility Act and the procedures and policies published on February 19, 2003. A regulatory flexibility analysis examines the impact of the rule on small entities and considers alternative ways of reducing negative impacts.

In the context of this rulemaking, "small businesses," as defined by the Small Business Administration (SBA), for the small electric motor manufacturing industry are manufacturing enterprises with 1,000 employees or fewer. See *http://www.sba.gov/idc/groups/public/documents/sba_homepage/serv_sstd_tablepdf.pdf.* DOE used this small business definition to determine whether any small entities would be required to comply with the rule. (65 FR 30836, 30850 (May 15, 2000), as amended at 65 FR 53533, 53545 (September 5, 2000) and codified at 13 CFR part 121. The size standards are listed by NAICS code and industry description. The manufacturers impacted by this rule are generally classified under NAICS 335312, "Motor and Generator Manufacturing," which sets a threshold of 1,000 employees or less for an entity in this category to be considered a small business.

As explained in the NOPR, DOE identified producers of equipment covered by this rulemaking, which have manufacturing facilities located within the United States and could be considered small entities, by two methods: (1) Asking larger manufacturers in MIA interviews to identify any competitors they believe may be a small business, and (2) researching NEMA-identified fractional horsepower motor manufacturers. DOE then looked at publicly-available data and contacted manufacturers, as necessary, to determine if they meet the SBA's definition of a small manufacturing company. In total, DOE identified 11 companies that could potentially be small businesses. During initial review of the 11 companies in its list, DOE either contacted or researched each company to determine if it sold covered small electric motors. Based on its research, DOE screened out companies that did not offer motors covered by this rulemaking. Consequently, DOE estimated that only one out of 11 companies listed were potentially small business manufacturers of covered products. DOE then contacted this potential small business manufacturer and determined that the company's equipment would not be covered by this proposed rulemaking. Thus, based on its initial screening and subsequent interviews, DOE did not identify any company as a small business manufacturer based on SBA's definition of a small business manufacturer for this industry. (74 FR 61410, 61496). For today' final rule, DOE did not identify any additional companies that would be potential small business manufacturer based on SBA's definition of a small business manufacturer for the small electric motor industry.

DOE reviewed the standard levels considered in today's final rule under the provisions of the Regulatory Flexibility Act and the procedures and policies published on February 19, 2003. On the basis of the foregoing, DOE reaffirms the certification. Therefore, DOE has not prepared a final regulatory flexibility analysis for this rule.

*C. Review Under the Paperwork Reduction Act*

This rulemaking imposes no new information or recordkeeping requirements. Accordingly, OMB clearance is not required under the Paperwork Reduction Act. (44 U.S.C. 3501, *et seq.*)

*D. Review Under the National Environmental Policy Act*

DOE prepared an environmental assessment of the impacts of today's standards which it published as chapter 15 within the TSD for the final rule. DOE found the environmental effects associated with today's standard levels for small electric motors to be insignificant. Therefore, DOE is issuing a FONSI pursuant to NEPA (42 U.S.C. 4321 *et seq.*), the regulations of the Council on Environmental Quality (40 CFR parts 1500–1508), and DOE's regulations for compliance with NEPA (10 CFR part 1021). The FONSI is available in the docket for this rulemaking.

*E. Review Under Executive Order 13132*

DOE reviewed this rule pursuant to Executive Order 13132, "Federalism," 64 FR 43255 (August 4, 1999), which imposes certain requirements on agencies formulating and implementing policies or regulations that preempt State law or that have federalism implications. In accordance with DOE's statement of policy describing the intergovernmental consultation process it will follow in the development of regulations that have federalism implications, 65 FR 13735 (March 14, 2000), DOE examined the November 2009 proposed rule and determined that the rule would not have a substantial direct effect on the States, on the relationship between the National Government and the States, or on the distribution of power and responsibilities among the various levels of Government. See 74 FR 61497. DOE received no comments on this issue in response to the NOPR, and its conclusions on this issue are the same for the final rule as they were for the proposed rule. Therefore, DOE has taken no further action in today's final rule with respect to Executive Order 13132.

*F. Review Under Executive Order 12988*

With respect to the review of existing regulations and the promulgation of new regulations, section 3(a) of Executive Order 12988, "Civil Justice Reform" (61 FR 4729 (February 7, 1996)) imposes on Federal agencies the general duty to adhere to the following requirements: (1) Eliminate drafting errors and ambiguity, (2) write regulations to minimize litigation, and (3) provide a clear legal standard for affected conduct rather than a general standard and promote simplification and burden reduction. Section 3(b) of Executive Order 12988 specifically requires that Executive agencies make every reasonable effort to ensure that the regulation: (1) Clearly specifies the preemptive effect, if any; (2) clearly specifies any effect on existing Federal law or regulation; (3) provides a clear legal standard for affected conduct while promoting simplification and

burden reduction; (4) specifies the retroactive effect, if any; (5) adequately defines key terms; and (6) addresses other important issues affecting clarity and general draftsmanship under any guidelines issued by the Attorney General. Section 3(c) of Executive Order 12988 requires Executive agencies to review regulations in light of applicable standards in section 3(a) and section 3(b) to determine whether they are met or it is unreasonable to meet one or more of them. DOE has completed the required review and determined that, to the extent permitted by law, the final regulations meet the relevant standards of Executive Order 12988.

*G. Review Under the Unfunded Mandates Reform Act of 1995*

As indicated in the NOPR, DOE reviewed the proposed rule under Title II of the Unfunded Mandates Reform Act of 1995 (Pub. L. 104–4) (UMRA), which imposes requirements on Federal agencies when their regulatory actions will have certain types of impacts on State, local, and Tribal governments and the private sector. See 74 FR 61497. DOE concluded that this rule would not contain an intergovernmental mandate, but would likely result in expenditures of $100 million or more after 2015 for private sector commercial and industrial users of equipment with small electric motors. DOE estimated annualized impacts for the final standards using the results of the national impacts analysis. The national impact analysis results expressed as annualized values are $961–$1,146 million in total annualized benefits from the final rule, $264 million in annualized costs, and $698–$882 million in annualized net benefits. Details are provided in chapter 10 of the TSD. Therefore, DOE must publish a written statement assessing the costs, benefits, and other effects of the rule on the national economy.

Section 205 of UMRA also requires DOE to identify and consider a reasonable number of regulatory alternatives before promulgating a rule for which UMRA requires such a written statement. DOE must select from those alternatives the most cost-effective and least burdensome alternative that achieves the objectives of the rule, unless DOE publishes an explanation for doing otherwise or the selection of such an alternative is inconsistent with law.

Today's energy conservation standards for small electric motors would achieve the maximum improvement in energy efficiency that DOE has determined to be both technologically feasible and economically justified. A discussion of the alternatives considered by DOE is presented in the regulatory impact analysis section of the TSD for this rule. Also, Section 202(c) of UMRA authorizes an agency to prepare the written statement required by UMRA in conjunction with or as part of any other statement or analysis that accompanies the proposed rule. (2 U.S.C. 1532(c)) The TSD, preamble, and regulatory impact analysis for today's final rule contain a full discussion of the rule's costs, benefits, and other effects on the national economy, and therefore satisfy UMRA's written statement requirement.

*H. Review Under the Treasury and General Government Appropriations Act, 1999*

DOE determined that, for this rulemaking, it need not prepare a Family Policymaking Assessment under Section 654 of the Treasury and General Government Appropriations Act, 1999 (Pub. L. 105–277). See 74 FR 61497. DOE received no comments concerning Section 654 in response to the NOPR, and, therefore, has taken no further action in today's final rule with respect to this provision.

*I. Review Under Executive Order 12630*

DOE determined under Executive Order 12630, "Governmental Actions and Interference with Constitutionally Protected Property Rights," 53 FR 8859 (March 18, 1988), that today's rule would not result in any takings that might require compensation under the Fifth Amendment to the U.S. Constitution. See 74 FR 61497–98. DOE received no comments concerning Executive Order 12630 in response to the NOPR, and, therefore, has taken no further action in today's final rule with respect to this Executive Order.

*J. Review Under the Treasury and General Government Appropriations Act, 2001*

Section 515 of the Treasury and General Government Appropriations Act, 2001 (44 U.S.C. 3516, note) provides for agencies to review most disseminations of information to the public under guidelines established by each agency pursuant to general guidelines issued by OMB. OMB's guidelines were published at 67 FR 8452 (February 22, 2002), and DOE's guidelines were published at 67 FR 62446 (October 7, 2002). DOE has reviewed today's final rule under the OMB and DOE guidelines and has concluded that it is consistent with applicable policies in those guidelines.

*K. Review Under Executive Order 13211*

Executive Order 13211, "Actions Concerning Regulations That Significantly Affect Energy Supply, Distribution, or Use," 66 FR 28355 (May 22, 2001) requires Federal agencies to prepare and submit to the Office of Information and Regulatory Affairs (OIRA) a Statement of Energy Effects for any proposed significant energy action. DOE determined that today's rule, which sets energy conservation standards for small electric motors, is not a "significant energy action" within the meaning of Executive Order 13211. See 74 FR 61498. Accordingly, DOE did not prepare a Statement of Energy Effects on the proposed rule. DOE received no comments on this issue in response to the NOPR. As with the proposed rule, DOE has concluded that today's final rule is not a significant energy action within the meaning of Executive Order 13211, and has not prepared a Statement of Energy Effects on the final rule.

*L. Review Under the Information Quality Bulletin for Peer Review*

In consultation with the Office of Science and Technology Policy (OSTP), OMB issued on December 16, 2004, its "Final Information Quality Bulletin for Peer Review" (the Bulletin). 70 FR 2664. (January 14, 2005) The Bulletin establishes that certain scientific information shall be peer reviewed by qualified specialists before it is disseminated by the Federal government, including influential scientific information related to agency regulatory actions. The purpose of the bulletin is to enhance the quality and credibility of the Government's scientific information.

As set forth in the NOPR, DOE held formal in-progress peer reviews of the types of analyses and processes that DOE has used to develop the energy efficiency standards in today's rule, and issued a report on these peer reviews. The report is available at *http://www.eere.energy.gov/buildings/appliance_standards/peer_review.html.* See 74 FR 61498.

*M. Congressional Notification*

As required by 5 U.S.C. 801, DOE will submit to Congress a report regarding the issuance of today's final rule prior to the effective date set forth at the outset of this notice. The report will state that it has been determined that the rule is a "major rule" as defined by 5 U.S.C. 804(2). DOE also will submit the supporting analyses to the Comptroller General in the U.S. Government Accountability Office

(GAO) and make them available to each House of Congress.

## VIII. Approval of the Office of the Secretary

The Secretary of Energy has approved publication of today's final rule.

## List of Subjects in 10 CFR Part 431

Administrative practice and procedure, Confidential business information, Energy conservation test procedures, Reporting and recordkeeping requirements.

Issued in Washington, DC, on February 22, 2010.

**Cathy Zoi,**

*Assistant Secretary, Energy Efficiency and Renewable Energy.*

■ For the reasons stated in the preamble, DOE amends part 431 of chapter II of title 10, of the Code of Federal Regulations, to read as set forth below.

## PART 431—ENERGY EFFICIENCY PROGRAM FOR CERTAIN COMMERCIAL AND INDUSTRIAL EQUIPMENT

■ 1. The authority citation for part 431 continues to read as follows:

**Authority:** 42 U.S.C. 6291–6317.

■ 2. Section 431.446 is revised to read as follows:

### Energy Conservation Standards

**§ 431.446 Small electric motors energy conservation standards and their effective dates.**

(a) Each small electric motor manufactured (alone or as a component of another piece of non-covered equipment) after February 28, 2015, shall have an average full load efficiency of not less than the following:

| Motor horsepower/standard kilowatt equivalent | Average full load efficiency | | |
|---|---|---|---|
| | Polyphase | | |
| | Open motors (number of poles) | | |
| | 6 | 4 | 2 |
| 0.25/0.18 | 67.5 | 69.5 | 65.6 |
| 0.33/0.25 | 71.4 | 73.4 | 69.5 |
| 0.5/0.37 | 75.3 | 78.2 | 73.4 |
| 0.75/0.55 | 81.7 | 81.1 | 76.8 |
| 1/0.75 | 82.5 | 83.5 | 77.0 |
| 1.5/1.1 | 83.8 | 86.5 | 84.0 |
| 2/1.5 | N/A | 86.5 | 85.5 |
| 3/2.2 | N/A | 86.9 | 85.5 |

| Motor horsepower/standard kilowatt equivalent | Average full load efficiency | | |
|---|---|---|---|
| | Capacitor-start capacitor-run and capacitor-start induction-run | | |
| | Open motors (number of poles) | | |
| | 6 | 4 | 2 |
| 0.25/0.18 | 62.2 | 68.5 | 66.6 |
| 0.33/0.25 | 66.6 | 72.4 | 70.5 |
| 0.5/0.37 | 76.2 | 76.2 | 72.4 |
| 0.75/0.55 | 80.2 | 81.8 | 76.2 |
| 1/0.75 | 81.1 | 82.6 | 80.4 |
| 1.5/1.1 | N/A | 83.8 | 81.5 |
| 2/1.5 | N/A | 84.5 | 82.9 |
| 3/2.2 | N/A | N/A | 84.1 |

(b) For purposes of determining the required minimum average full load efficiency of an electric motor that has a horsepower or kilowatt rating between two horsepower or two kilowatt ratings listed in any table of efficiency standards in paragraph (a) of this section, each such motor shall be deemed to have a listed horsepower or kilowatt rating, determined as follows:

(1) A horsepower at or above the midpoint between the two consecutive horsepower ratings shall be rounded up to the higher of the two horsepower ratings;

(2) A horsepower below the midpoint between the two consecutive horsepower ratings shall be rounded down to the lower of the two horsepower ratings; or

(3) A kilowatt rating shall be directly converted from kilowatts to horsepower using the formula 1 kilowatt = (1/0.746) hp, without calculating beyond three significant decimal places, and the resulting horsepower shall be rounded in accordance with paragraphs (b)(1) or (b)(2) of this section, whichever applies.

## Appendix

[The following letter from the Department of Justice will not appear in the Code of Federal Regulations.]

Department of Justice, Antitrust Division, Main Justice Building, 950 Pennsylvania Avenue, NW., Washington, DC 20530–0001, (202) 514–2401/(202) 616–2645(f), *antitrust.atr@usdoj.gov, http://www.usdoj.gov/atr.*

January 25, 2010.

Robert H. Edwards, Jr., Deputy General Counsel for Energy Policy, Department of Energy, Washington, DC 20585.

Dear Deputy General Counsel Edwards: I am responding to your November 19, 2009 letter seeking the views of the Attorney General about the potential impact on competition of proposed energy conservation standards for small electric motors. Your request was submitted pursuant to Section 325(o)(2)(B)(i)(V) of the Energy Policy and Conservation Act, as amended, ("EPCA"), 42 U.S.C. § 6295(o)(B)(i)(V), which requires the Attorney General to make a determination of the impact of any lessening of competition that is likely to result from the imposition of proposed energy conservation standards. The Attorney General's responsibility for

responding to requests from other departments about the effect of a program on competition has been delegated to the Assistant Attorney General for the Antitrust Division in 28 CFR § 0.40(g).

In conducting its analysis the Antitrust Division examines whether a proposed standard may lessen competition, for example, by substantially limiting consumer choice, leaving consumers with fewer competitive alternatives, placing certain manufacturers of a product at an unjustified competitive disadvantage compared to other manufacturers, or by inducing avoidable inefficiencies in production or distribution of particular products.

We have reviewed the proposed standards contained in the Notice of Proposed Rulemaking ("NOPR")(74 Fed. Reg. 61410) and attended the December 17, 2009 public hearing on the proposed standard.

Based on our review of the record, the proposed standards for small electric motors could increase costs for consumers who need to replace small electric motors in existing equipment. Proposed Trial Standard Level (TSL) 5 for polyphase small electric motors and TSL 7 for all capacitor-start small electric motors apply to motors sold as replacements as well as to those built into original equipment. We understand that compliance with those standards could require manufacturers to increase the size of their motors such that the larger motors will not fit into existing space constrained equipment. In such a case, owners of existing equipment with a broken motor would have to either replace the entire piece of equipment or attempt to repair the motor. Such equipment owners would not have the option of simply replacing the existing small electric motor, thus limiting the range of competitive alternatives available to them. This may be quite onerous to consumers when the motor is only a small component of the total cost of the item and repairing the motor is difficult or costly. We ask the Department of Energy to take this possible impact into account and consider, as is warranted, exempting from the proposed standard the manufacture and marketing of certain replacement small electric motors for a limited period in time.

Sincerely,

Christine A. Varney,
*Assistant Attorney General.*

[FR Doc. 2010–4358 Filed 3–8–10; 8:45 am]

**BILLING CODE 6450–01–P**

Federal Register

Tuesday,
March 9, 2010

# Part III

# Department of Energy

## 10 CFR Part 431

## Energy Conservation Program for Certain Commercial and Industrial Equipment: Test Procedure for Metal Halide Lamp Ballasts (Active and Standby Modes) and Proposed Information Collection, et al.; Final Rule and Notice

**DEPARTMENT OF ENERGY**

**10 CFR Part 431**

**[Docket No. EERE–2008–BT–TP–0017]**

**RIN 1904–AB87**

# Energy Conservation Program for Certain Commercial and Industrial Equipment: Test Procedure for Metal Halide Lamp Ballasts (Active and Standby Modes) and Proposed Information Collection; Comment Request; Certification, Compliance, and Enforcement Requirements for Consumer Products and Certain Commercial and Industrial Equipment; Final Rule and Notice

**AGENCY:** Office of Energy Efficiency and Renewable Energy, Department of Energy.

**ACTION:** Final rule.

**SUMMARY:** The U.S. Department of Energy (DOE) is establishing metal halide lamp ballast test procedures in today's final rule by which manufacturers will demonstrate compliance with the metal halide lamp fixture energy conservation standards mandated by the Energy Policy and Conservation Act (EPCA), as amended. These test procedures are based primarily on and incorporate by reference provisions of American National Standards Institute (ANSI) Standard C82.6–2005, "Ballasts for High-Intensity Discharge Lamps—Methods of Measurement." As further required by EPCA, DOE is establishing a test method for measuring standby mode power consumption and explaining why off mode power consumption does not apply to metal halide lamp ballasts. The test procedures' standby mode provisions are based on the International Electrotechnical Commission (IEC) Standard 62301, "Household electrical appliances—Measurement of standby power." This rule also adopts a number of definitions for key terms.

**DATES:** These test procedures are effective on April 8, 2010. The incorporation by reference of a certain publication listed in this rule is approved by the Director of the Federal Register as of April 8, 2010.

**ADDRESSES:** You may review copies of all materials related to this rulemaking at the U.S. Department of Energy, Resource Room of the Building Technologies Program, 950 L'Enfant Plaza, SW., Suite 600, Washington, DC, (202) 586–2945, between 9 a.m. and 4 p.m., Monday through Friday, except Federal Holidays. Please call Ms. Brenda Edwards at the above telephone number for additional information regarding visiting the Resource Room.

**FOR FURTHER INFORMATION CONTACT:** Ms. Linda Graves, U.S. Department of Energy, Office of Energy Efficiency and Renewable Energy, Building Technologies Program, Mailstop EE–2J, 1000 Independence Avenue, SW., Washington, DC 20585–0121. Telephone: (202) 586–1851. E-mail: *Linda.Graves@ee.doe.gov.*

For legal issues, contact Mr. Eric Stas, U.S. Department of Energy, Office of the General Counsel, GC–71, 1000 Independence Avenue, SW., Washington, DC 20585–0121. Telephone: (202) 586–9507. E-mail: *Eric.Stas@hq.doe.gov.*

**SUPPLEMENTARY INFORMATION:** This rule includes language that refers to the following standard that has been previously approved for incorporation by reference:

ANSI C82.6–2005, Proposed Revision of ANSI C82.6–1985 (ANSI C82.6), American National Standard for lamp ballasts—Ballasts for High-Intensity Discharge Lamps—Methods of Measurement, approved February 14, 2005.

Copies of this standard are available from: American National Standards Institute (ANSI), 25 W. 43rd Street, 4th Floor, New York, NY 10036, 212–642–4900, or go to *http://www.ansi.org.*

**Table of Contents**

I. Authority and Background
II. Summary of the Final Rule
III. Discussion
A. Definitions
B. Test Method for Measuring Energy Efficiency of Metal Halide Lamp Ballasts
1. Test Setup and Conditions
a. Lamp Orientation
b. Power Supply, Ambient Test Temperatures, and Instrumentation
c. Lamp Stabilization
2. Test Measurements
3. Ballast Efficiency Calculation
C. Test Method for Measuring Standby Power of Metal Halide Lamp Ballasts
1. Overview of Test Method
2. Test Method and Measurements
3. Combining Measurements and Burden
D. Scope of Applicability of Standby Power Test Procedure
E. Effective Date of Standby Mode Test Method
F. Units To Be Tested
G. Submission of Data
H. Enforcement Provisions
I. Provisions for Compliance, Certification, and Enforcement
IV. Procedural Issues and Regulatory Review
A. Review Under Executive Order 12866
B. Review Under the Regulatory Flexibility Act
C. Review Under the Paperwork Reduction Act of 1995
D. Review Under the National Environmental Policy Act
E. Review Under Executive Order 13132
F. Review Under Executive Order 12988
G. Review Under the Unfunded Mandates Reform Act of 1995
H. Review Under the Treasury and General Government Appropriations Act, 1999
I. Review Under Executive Order 12630
J. Review Under the Treasury and General Government Appropriations Act, 2001
K. Review Under Executive Order 13211
L. Review Under Section 32 of the Federal Energy Administration Act of 1974
M. Congressional Notification
V. Approval of the Office of the Secretary

## I. Authority and Background

Title III of the Energy Policy and Conservation Act (42 United States Code (U.S.C.) 6291 *et seq.;* EPCA) sets forth provisions to improve energy efficiency. Part A [1] (42 U.S.C. 6291–6309) establishes the Energy Conservation Program for Consumer Products Other Than Automobiles (Program), which covers consumer products and certain commercial equipment, including metal halide lamp fixtures. (42 U.S.C. 6292(a)(19)) Metal halide lamp fixtures contain metal halide lamp ballasts. Because the metal halide lamp fixture energy conservation standards in EPCA establish a minimum efficiency for the ballasts incorporated into those fixtures, this test procedure addresses measurement of metal halide lamp ballast efficiency. (42 U.S.C. 6295(hh)(1)(A)).

The program generally includes testing, labeling, and Federal energy conservation standards. The testing requirements consist of test procedures prescribed under EPCA, that manufacturers of covered equipment must use: (a) As the basis for certifying to DOE that their products comply with energy conservation standards promulgated under EPCA; and (b) for representing the energy efficiency of their products. Similarly, DOE must use these test procedures when determining whether the equipment complies with energy conservation standards adopted pursuant to EPCA.

EPCA established generally applicable criteria and procedures for DOE's adoption and amendment of such test procedures (42 U.S.C. 6293), and provided that "[a]ny test procedures prescribed or amended under this section shall be reasonably designed to produce test results which measure energy efficiency, energy use, * * * or estimated annual operating cost of a covered product during a representative average use cycle or period of use, as determined by the Secretary [of Energy],

[1] This part was originally titled Part B. It was redesignated Part A in the United States Code for editorial reasons.

and shall not be unduly burdensome to conduct." (42 U.S.C. 6293(b)(3)).

For metal halide lamp ballasts, section 324(c) of the Energy Independence and Security Act of 2007 (Public Law (Pub. L.) 110–140; EISA 2007) amended EPCA and required DOE to establish test procedures for metal halide lamp ballasts—a newly covered equipment type under the statute—as follows: "(18) Metal halide lamp ballasts.—Test procedures for metal halide lamp ballasts shall be based on ANSI Standard C82.6–2005, titled 'Ballasts for High-Intensity Discharge Lamps—Method of Measurement.' " (42 U.S.C. 6293(b)(18)).

Section 324(e) of EISA 2007 also prescribed mandatory minimum efficiency levels for pulse-start metal halide lamp ballasts, magnetic probe-start lamp ballasts, and nonpulse-start electronic lamp ballasts that operate [metal halide] lamps rated greater than or equal to 150 watts (W) but less than or equal to 500 W. (42 U.S.C. 6295(hh)(1)(A)) Excluded from these energy conservation standards are regulated lag ballasts,[2] electronic ballasts that operate at 480 volts, or ballasts in fixtures that are: (1) Rated only for 150 W lamps; (2) rated for use in wet locations, as specified by the National Electrical Code 2002, section 410.4(A); and (3) contain a ballast that is rated to operate at ambient air temperatures above 50 degrees Celsius (°C), as specified in UL 1029–2001 by Underwriters Laboratories, Inc. (42 U.S.C. 6295(hh)(1)(B)) These statutory standards apply to metal halide lamp fixtures manufactured on or after January 1, 2009. (42 U.S.C. 6295(hh)(1)(C)).

DOE again notes that because of the codification of the metal halide lamp fixture provisions in 42 U.S.C. 6295, a rulemaking for metal halide lamp fixture energy conservation standards and any associated test procedures are subject to the requirements of the consumer products provisions of Part A of Title III. However, because metal halide lamp fixtures (and their ballasts) are generally considered to be commercial equipment and consistent with DOE's previous action to incorporate requirements of the Energy Policy Act of 2005 (EPACT 2005) for commercial equipment into 10 CFR part 431 ("Energy Efficiency Program for Certain Commercial and Industrial Equipment"), DOE intends to place the new requirements for metal halide lamp fixtures (and ballasts) in 10 CFR part 431 for ease of reference. DOE notes that the location of the provisions within the CFR does not affect either the substance or applicable procedure for metal halide lamp ballasts; as such, DOE is placing them in the appropriate CFR part based upon the nature or type of those products. Based upon their placement into 10 CFR 431, metal halide lamp ballasts will be referred to as "equipment" throughout this notice.

EISA 2007 further amended EPCA. In relevant part here, section 310 of EISA 2007 includes a requirement that DOE amend its test procedures, if technically infeasible, to include standby mode and off mode energy consumption in the overall energy efficiency, energy consumption, or other energy descriptor for each covered product for which DOE's current test procedures do not fully account for standby mode and off mode energy consumption. If such combined measure is technically infeasible, DOE must prescribe a separate standby mode and off mode energy use test procedure, if technically feasible. (42 U.S.C. 6295(gg)(2)(A)) Any such amendment must consider the most current versions of IEC Standards 62301, "Household electrical appliances—Measurement of standby power," and 62087, "Methods of measurement for the power consumption of audio, video and related equipment." *Id.* Further, section 310 of EISA 2007 provides that any final rule establishing or revising energy conservation standards adopted on or after July 1, 2010, must incorporate standby mode and off mode energy use. (42 U.S.C. 6295(gg)(3)(A)) DOE notes here that EPCA, as amended, requires DOE to determine whether the energy conservation standards for metal halide lamp fixtures should be amended, and if so, DOE must publish a final rule with amended standards by January 1, 2012. (42 U.S.C. 6295(hh)(2)).

Accordingly, pursuant to section 310 of EISA 2007 and given the potential for amended energy conservation standards for metal halide lamp fixtures that address standby mode and off mode, DOE has concluded that its metal halide lamp ballast test procedure must account for standby mode and off mode energy consumption. (42 U.S.C. 6295(gg)(2)) A DOE test procedure is needed that accounts for standby mode and off mode energy use, in order to permit manufacturers to measure and certify compliance with energy conservation standards for metal halide lamp fixtures that address those modes. Today's final rule will also provide DOE a means for determining compliance with any standard adopted for metal halide lamp fixtures that includes such energy consumption.

## II. Summary of the Final Rule

As noted above, EPCA, as amended by EISA 2007, states that test procedures for metal halide lamp ballasts shall be based on ANSI Standard C82.6–2005 (ANSI C82.6–2005), "Ballasts for High Intensity Discharge Lamps—Methods of Measurement." (42 U.S.C. 6293(b)(18)) DOE found ANSI C82.6–2005 suitable for testing metal halide lamp ballasts because it contained all of the required major elements to adequately measure the efficiency of metal halide lamp ballasts, as discussed in section III.B. Accordingly, DOE has drawn on relevant portions of ANSI C82.6–2005 in developing its metal halide lamp ballast test procedure. Specifically, today's final rule references the ballast power loss measurement method (section 6.10) of ANSI C82.6–2005 as the means of determining the efficiency of metal halide lamp ballasts, and references other applicable sections of ANSI C82.6–2005 for test conditions and setup. The test procedure currently applies to metal halide lamp ballasts that operate lamps rated greater than or equal to 150 W but less than or equal to 500 W (although it is capable of measuring ballasts operating lamps of both higher and lower wattage ranges), and the final rule establishes test methodologies for measuring standby mode power consumption, based on relevant portions of IEC 62301 and ANSI C82.6–2005. Finally, the final rule establishes the sampling and efficiency calculations to be used.

DOE reviewed the definitions of "standby mode" and "off mode" contained in EPCA section 325(gg)(1) in the context of metal halide lamp ballasts. (42 USC 6295(gg)(1)) DOE found that, while it is possible for metal halide lamp ballasts to operate in standby mode, the off mode condition does not apply because it addresses a mode of energy use in which metal halide lamp ballasts do not operate. For this reason, today's final rule prescribes a test method for measuring power consumption in standby mode (section III.C), but it does not prescribe an off mode test method. The prescribed standby mode test will enable DOE to consider and address standby mode energy consumption in the next metal halide lamp fixture energy conservation standards rulemaking.

The "standby mode" definition established by EISA 2007 does not apply to all ballasts. 74 **Federal Register** (FR) 33171, 33174 (July 10, 2009). There are two types of ballasts (*i.e.,* magnetic and electronic), but only electronic

[2] A "regulated lag ballast" is the industry term for a lag ballast with a third coil for improved lamp power regulation.

ballasts or magnetic ballasts operating with an auxiliary control device can operate in standby mode. DOE determined that standby mode applies only to certain ballasts under certain operating conditions. See sections III.A. and III.C for a detailed discussion of the definitions for "standby mode" and "off mode," as well as test methods for standby mode.

As provided by EPCA, amendments to the test procedures to include standby mode and off mode energy consumption shall not be used to determine compliance with previously established standards. (42 U.S.C. 6295(gg)(2)(C)) The inclusion of a standby mode test method in this final rule will not affect a manufacturer's ability to demonstrate compliance with the energy conservation standards for metal halide lamp fixtures that took effect January 1, 2009. (42 U.S.C. 6295(hh)(1)(C)(i)) The standby mode test need not be performed to determine compliance with the current energy conservation standards for metal halide lamp fixtures because the standards do not account for standby mode energy consumption.

Today's final rule, which includes provisions for measuring standby mode, will become effective, in terms of adoption into the Code of Federal Regulations (CFR), 30 days after the date of publication in the **Federal Register.** Manufacturers will be required to use this test procedure's standby mode provisions to demonstrate compliance with any future energy conservation standards for metal halide lamp fixtures as of the effective date of a final rule establishing amended energy conservation standards for metal halide lamp fixtures that address standby mode energy consumption. The introductory sentence in section 431.324(c) reads as follows: "The measurement of standby mode need not be performed to determine compliance with energy conservation standards for metal halide lamp fixtures at this time. The above statement will be removed as part of the rulemaking to amend the energy conservation standards for metal halide lamp fixtures to account for standby mode energy consumption, and the following shall apply on the compliance date for such requirements." The quoted language will be removed in the rulemaking to amend the EISA 2007 energy conservation standards for metal halide lamp fixtures to address standby mode power consumption. A statement has also been added at 10 CFR 431.324(c) to clarify that on or after a date 180 days after the date of publication on this final rule, any representations pertaining to standby mode energy consumption must be based upon testing under the relevant provisions of this test procedure. Although this is a statutory requirement under 42 U.S.C. 6293(c)(2), DOE has concluded that it would be useful to explicitly state this requirement in DOE's regulations.

## III. Discussion

Before addressing specific technical comments on the metal halide lamp ballast test procedure notice of proposed rulemaking (NOPR), DOE would first summarize its general approach to this rulemaking and address one related comment. In the July 10, 2009 NOPR, DOE proposed that only the active mode and standby mode applied to metal halide lamp ballasts, and tentatively concluded that off mode is not applicable. 74 FR 33171, 33172–73 (July 10, 2009). For the NOPR, DOE also reviewed ANSI C82.6–2005 to determine whether any additional elements would be needed to provide a complete test procedure, and tentatively concluded that all elements required for conducting efficiency measurements of metal halide lamp ballasts are present in ANSI C82.6–2005, including lamp orientation, power supply characteristics, operational test temperatures, instrumentation requirements, setup connections, and lamp stabilization. In the NOPR, DOE also discussed the ANSI standards development process. *Id.* at 33173. DOE affirms these tentative conclusions in today's final rule. Accordingly, after carefully considering and addressing comments on the NOPR, DOE is adopting the applicable requirements and methods of ANSI C82.6–2005 into the DOE test procedure for metal halide lamp ballasts. In addition, DOE adopts a statistically meaningful method for determining sample size as part of the metal halide lamp ballast test procedure, consistent with the sampling plans used in other DOE test procedures.

The National Electrical Manufacturers Association (NEMA) informed DOE that ANSI C82.6–2005 is in the process of being revised, and suggested that DOE or its contractors participate in the standards development process. (NEMA, Public Meeting Transcript, No. 11 at p. 8) DOE appreciates this comment and understands the context for NEMA's suggestion. Although DOE is supportive of the ANSI standard-setting process and DOE (or its contractor) may consider participation in that standards process, DOE is unable to use a different version of C82.6–2005 at this time for two reasons: (1) DOE is directed by the statute to base its test procedure on the 2005 edition of ANSI C82.6 for determining the efficiency of metal halide lamp ballasts used in metal halide lamp fixtures (42 U.S.C. 6293(b)(18)); and (2) DOE needs to adopt a test procedure for metal halide lamp ballasts to address the current, statutorily-prescribed standards for ballasts contained in metal halide lamp fixtures. DOE further notes that ANSI C82.6–2005 is still active and is the most current version of this test procedure. DOE is concerned that postponing this test procedure rulemaking to wait for the updated version of ANSI C82.6 to be issued could cause a significant delay in adoption of a test procedure for metal halide lamp ballasts. If industry does issue an revised version of ANSI C82.6, DOE may update today's adopted test procedure when it considers amendments as required by section 323(b)(1)(A) of EPCA. (42 U.S.C. 6293(b)(1)(A))

### *A. Definitions*

DOE reviewed the relevant portions of EISA 2007 and 10 CFR part 431 for applicable existing definitions for use in developing and applying the metal halide lamp ballast test procedure. EISA 2007 amends EPCA, in part, by adding definitions of key terms that are applicable to the metal halide lamp ballast test procedure, including "ballast," "ballast efficiency," "electronic ballast," "metal halide lamp ballast," "metal halide lamp," "metal halide lamp fixture," "probe-start metal halide lamp ballast," and "pulse-start metal halide lamp ballast." (42 U.S.C. 6291) These definitions were set forth in the July 10, 2009 NOPR. 74 FR 33171, 33173–74. DOE discusses the terms "ballast," "ballast efficiency," and "electronic ballast" below, for which it codifies new or revised definitions in today's final rule. The other terms, including "metal halide lamp ballast," "metal halide lamp," "metal halide lamp fixture," "probe-start metal halide lamp ballast," and "pulse-start metal halide lamp ballast" were previously inserted into the CFR by the Technical Amendment Final Rule and remain unchanged. 74 FR 12058, 12075–76 (March 23, 2009)).

"Ballast"

EISA 2007 provides a new definition for the term "ballast" which is relevant to metal halide lamp fixtures. This term is defined as follows: "a device used with an electric discharge lamp to obtain necessary circuit conditions (voltage, current, and waveform) for starting and operating. (42 U.S.C. 6291(58)) This definition was already adopted into DOE's regulations for both consumer products (10 CFR 430.2) and

commercial equipment (10 CFR 431.282) in the Technical Amendment Final Rule. 74 FR 12058, 12064 (March 23, 2009). However, DOE is adopting this definition into 10 CFR 431.322 without modifications in today's final rule.

"Ballast Efficiency"

EISA 2007 also provides a definition for the term "ballast efficiency" which is relevant to metal halide lamp fixtures. (42 U.S.C. 6291(59)) This term was adopted by DOE in the Technical Amendment Final Rule (74 FR 12058, 12075 (March 23, 2009)) as follows: "in the case of a high-intensity discharge fixture, the efficiency of a lamp and ballast combination, expressed as a percentage." Ballast efficiency is calculated in accordance with the formula presented with the definition for the term "ballast efficiency" in the Technical Amendment Final Rule (74 FR 12075, March 23, 2009).

In its comments on the NOPR, NEMA recommended that the frequency referenced in the definition of "ballast efficiency" be increased from 2 kHz to 2.4 kHz, which includes the 40th order of the total harmonic for frequencies greater than 60 Hz. (NEMA, No. 21 at p. 4) DOE considered this comment, and reviewed other related similar test methods for related lighting products. DOE found that ANSI C82.77–2002, "American National Standard for Harmonic Emission Limits-Related Quality Requirements for Lighting Equipment," requires harmonic measurements up to the 40th harmonic. DOE also recognizes that to increase the frequency and include the 40th harmonic will improve the accuracy and repeatability of the test method adopted for metal halide lamp ballasts, thereby resulting in an improvement in the test procedure overall. For all of these reasons, DOE accepts NEMA's recommendation to extend ballast efficiency measurement to 2.4 kHz, and has amended the definition adopted in today's final rule accordingly.

"Electronic Ballast"

EISA 2007 provides a definition for the term "electronic ballast" which is relevant to metal halide lamp fixtures. This term is defined as follows: "a device that uses semiconductors as the primary means to control lamp starting and operation." (42 U.S.C. 6291(60)) This definition was already adopted into DOE's regulations for consumer products (10 CFR 430.2) in the Technical Amendment Final Rule. 74 FR 12058, 12065 (March 23, 2009). However, DOE is adopting this definition into 10 CFR 431.322 without modification in today's final rule. As stated in its NOPR, DOE notes that it interprets this definition to include equipment commonly referred to as "nonpulse-start electronic ballasts." 74 FR 33171, 33173 (July 10, 2009). DOE notes that this interpretation is by no means limited to such ballasts, and that other types of electronic ballasts such as "pulse-start electronic ballasts" would fall under this statutory definition.

"Basic Model"

In addition to the terms discussed above, in today's final rule, DOE is amending 10 CFR 431.322, "Definitions concerning metal halide lamp ballasts and fixtures," by adding a definition for "basic model" as it relates to metal halide lamp ballasts. DOE is also inserting definitions for terms associated with the measurement of standby mode power consumption for metal halide lamp ballasts. These terms are "active mode," "standby mode," "off mode," "alternating current (AC) control signal," "direct current (DC) control signal," "power line carrier (PLC) control signal," and "wireless control signal." It should be noted that the statute provides definitions for three modes of energy consumption (*i.e.,* active, standby, and off modes) that are applicable to a broad set of consumer products and commercial equipment, including metal halide lamp ballasts. (42 U.S.C. 6295(gg)(1)(A)) DOE adopts definitions for the terms "active mode," "standby mode," and "off mode" in today's final rule.

In the NOPR, DOE proposed a definition for a metal halide lamp ballast "basic model" at 10 CFR 431.322 based on the existing "basic model" definition for a fluorescent lamp ballast at 10 CFR 430.2. 74 FR 33171, 33174 (July 10, 2009). The proposed definition of the term "basic model" reads as follows: "with respect to metal halide [lamp] ballasts, as all units of a given type of metal halide [lamp] ballast (or class thereof) that: (1) Are rated to operate a given lamp type and wattage; (2) Have essentially identical electrical characteristics; and (3) Have no differing electrical, physical, or functional characteristics that affect energy consumption." *Id.* at 33184. DOE did not receive any comments on this proposed definition, and, therefore, is adopting it in today's final rule without substantive modification.

"Active Mode"

In the NOPR, DOE proposed to adopt the statutory definition for "active mode" as it applies to metal halide lamp ballasts. EPCA defines "active mode" as "the condition in which an energy-using product—(I) is connected to a main power source; (II) has been activated; and (III) provides 1 or more main functions." (42 U.S.C. 6295(gg)(1)(A)(i)) In the NOPR, DOE stated that the main function of the metal halide lamp ballast is to operate one or more metal halide lamps (*i.e.,* starting the lamp and regulating the current, voltage, or power of the lamp). DOE also stated that there are many different types of ballasts that could be considered "metal halide lamp ballasts," but the main function common to all of them is that they are designed to operate metal halide lamps. DOE did not discriminate between non-dimmable [3] and dimmable [4] ballasts when considering active mode; rather, DOE interprets active mode as being applicable to any amount of rated system light output (*i.e.,* greater than zero percent of the rated system light output). 74 FR 33171, 33174 (July 10, 2009). DOE received a comment from NEMA on this initial interpretation. NEMA requested that the term "active mode" be defined as operation of a metal halide lamp ballast at 100 percent of rated power. (NEMA, No. 21 at p. 4) DOE considered this comment, but is unable to adopt NEMA's proposed revision to the definition of "active mode." DOE's view that active mode applies to a functioning ballast operating with any amount of rated system light output (*i.e.,* greater than zero percent) has not changed (however, see the "fault load" discussion immediately below), and no new information has been introduced by the commenter that would cause DOE to adopt the commenter's suggested interpretation of "active mode." If a ballast is dimming (operating the light source greater than zero percent, but less than 100 percent) the lamp and the ballast are both still in active mode.

Although DOE did not address this condition in the NOPR, DOE wishes to clarify that a ballast connected to a fault load (*i.e.,* a lamp that is no longer working) is considered by DOE to be in active mode. In this mode, the ballast meets all three criteria for active mode function. The ballast is: (1) Connected to a main power source; (2) activated; and (3) providing its main function, which is to apply a voltage across the sockets in an attempt to start and operate a lamp. Therefore, active mode for metal halide lamp ballasts is considered to be the condition in which the ballast provides either: (1) A regulated current

[3] Non-dimmable ballasts would operate the lamp or lamps in active mode at 100 percent of the rated system light output.

[4] Dimmable ballasts may vary the system light output from 100 percent to some lower level of light output, either in steps or continuously.

to a properly-installed functional lamp; or (2) a voltage to the sockets to start and operate a lamp if a functional lamp were properly installed. DOE no longer believes that a ballast is in active mode only when the light output is any percentage greater than zero of the rated system light output because such a definition presupposes that a functional lamp is properly installed. Although, DOE is changing its interpretation of active mode, DOE's interpretation of standby mode and off mode remain the same as in the January 2009 NOPR. 74 FR 33171, 33174–75 (July 10, 2009). Furthermore, the interpretation of active mode in this final rule is consistent with other DOE interpretations for similar types of equipment and products (*i.e.,* ballasts). DOE had this same interpretation in the fluorescent lamp ballast standby test procedure 74 FR 54445, 54447 (Oct. 22, 2009).

"Standby Mode"

"Standby mode" is defined under EPCA as "the condition in which an energy-using product—(I) is connected to a main power source; and (II) offers 1 or more of the following user-oriented or protective functions: (aa) To facilitate the activation or deactivation of other functions (including active mode) by remote switch (including remote control), internal sensor, or timer. (bb) Continuous functions, including information or status displays (including clocks) or sensor-based functions." (42 U.S.C. 6295(gg)(1)(A)(iii)) As discussed below, two key aspects of this definition relate to metal halide lamp ballasts: (1) Connected to a main power source; and (2) offering the activation or deactivation of other functions by remote switch or internal sensor.

The definition of "standby mode" in part requires that ballasts be connected to their main power source. (42 U.S.C. 6295(gg)(1)(A)(iii)(I)) This "connected" requirement effectively precludes the majority of ballasts from having standby mode energy consumption, because most ballasts are operated with on-off switches, circuit breakers, or other relays that disconnect the ballast from the main power source. Although further consideration of such ballasts is unnecessary because their operational design falls outside the statutory definition of "standby mode," DOE would characterize their operation in such situations as follows: Once the ballast is disconnected from the main power source, the ballast ceases to operate the lamp, and the ballast consumes no energy. The vast majority of metal halide lamp ballasts do not consume power when they are switched off. Based on the statutory definition of "standby mode," ballasts controlled by disconnecting the ballast from the main power source do not operate in standby mode.

The "standby mode" definition further states that it applies to energy-using products that facilitate the activation or deactivation of other functions by remote switch, internal sensor, or timer. (42 U.S.C. 6295(gg)(1)(A)(iii)(II)(aa)) DOE interprets this condition as applying to ballasts that are designed to operate in or function as a lighting control system where auxiliary control devices send signals. An example of this type of ballast would be one that incorporates a digital addressable lighting interface (DALI) capability. Regardless of dimming, these ballasts incorporate an electronic circuit that enables the ballast to communicate with, and receive orders from, the DALI system. These instructions could tell the ballast to go into active mode or to adjust the light output to zero percent output. In this latter condition, the ballast no longer provides current to the metal halide lamp (*i.e.,* no longer in active mode). Thus, at zero light output, the ballast is standing by, connected to a main power source while it awaits instructions from the lighting control system to initiate an arc so the metal halide lamp can produce light again. Another example would be a metal halide lamp ballast that incorporates a lighting control circuit connected to a photosensor. This ballast and sensor function as a miniature lighting controls system, where the sensor provides input to the ballast control circuit, which determines whether the lamp should be operational. When the lamp is not operational (*i.e.,* when the photosensor indicates that it is bright outside), the ballast will consume power to enable the photosensor circuit to monitor the ambient conditions. When the circuit determines that the ambient conditions are sufficiently dark to start the lamp, it will instruct the ballast to initiate an arc in the lamp.

In its comments on the NOPR, NEMA accepted DOE's interpretation and application of standby mode to metal halide lamp ballasts that incorporate a circuit to enable the ballast to communicate with lighting control systems. (NEMA, No. 21 at p. 4) However, NEMA requested that the term "standby mode" be further defined to clarify that a stand-alone magnetic metal halide lamp ballast that does not incorporate any auxiliary electronic control devices be exempt from any energy consumption measurements in standby mode. (NEMA, No. 21 at p. 4) DOE considered this comment, but has not made any change to the definition of "standby mode" for two principal reasons. First, as DOE stated in the NOPR and again reiterates in this final rule, it is interpreting standby mode as only being applicable to ballasts that connect to lighting control systems via circuits that allow for communication with the control system. This interpretation is valid, regardless of the type of ballast (*e.g.,* magnetic, electronic). If the magnetic ballast does not have the circuit (in this case, an auxiliary electronic control device), then the ballast would not be considered capable of operating in standby mode. Second, DOE does not understand why one type of ballast should be singled out in the definition of the term "standby mode," to the exclusion of others, in order to establish that ballast type as exempt. Inserting language like this into the definition could be interpreted as providing uneven treatment of the various types of ballasts with respect to the definition of "standby mode." Given that there are other types of metal halide lamp ballasts in addition to the magnetic type, this explicit mention might confuse interested parties as to the applicability of standby mode for metal halide lamp ballasts overall.

"Off Mode"

As DOE discussed in the NOPR, "off mode" is defined by EPCA as "the condition in which an energy-using product—(I) is connected to a main power source; and (II) is not providing any standby or active mode function." (42 U.S.C. 6295(gg)(1)(A)(ii)) In the NOPR, DOE considered this definition in the context of metal halide lamp ballasts and stated that it believes that off mode does not apply to any metal halide lamp ballast, dimmable or non-dimmable, because off mode describes a condition that commercially-available ballasts do not attain. 74 FR 33171, 33174–75 (July 10, 2009). The definition of "off mode" requires that ballasts be connected to a main power source and not provide any standby mode or active mode function. (42 U.S.C. 6295(gg)(1)(A)(ii)) It is not possible for ballasts to meet these criteria, because there is no condition in which the ballast is connected to the main power source and is not in a mode already accounted for in either active mode or standby mode (as defined previously). Thus, ballasts never meet the second requirement of the EPCA definition of "off mode." (42 U.S.C. 6295(gg)(1)(A)(ii)(II)) NEMA commented that they accept the DOE approach for assessing metal halide lamp ballast operation in active mode and standby

mode. NEMA also agreed that "off mode" does not apply to metal halide lamp ballasts and should not be included as part of the proposed test procedure. (NEMA, No. 21 at p. 4) Therefore, for the reasons above, DOE's interpretation of "off mode" remains the same as in the NOPR, namely, DOE has concluded that off mode is not applicable to metal halide lamp ballasts. 74 FR 33171, 33175 (July 10, 2009). Should circumstances change, DOE may revisit this interpretation and propose a test method in a future rulemaking for measuring off mode in metal halide lamp ballasts.

"AC Control Signal"

In the NOPR, DOE proposed a definition for the term "AC control signal." 74 FR 33171, 33175 (July 10, 2009). In its study of the market, DOE found that some lighting control systems operate by communicating with (*i.e.,* providing a control signal to) lamp ballasts over a separate wiring system using AC voltage. DOE was unable to locate a definition for "AC control signal" in International Electrotechnical Commission (IEC) 62301 or ANSI C82.6–2005. Therefore, DOE proposed a definition for an "AC control signal" in its NOPR to enhance the clarity and understanding of its test procedure. 74 FR 33171, 33175 (July 10, 2009). NEMA commented that they accepted the proposed definition by DOE for "AC control signal." (NEMA, No. 21 at p.4) Given the absence of negative comment, DOE is adopting a definition for "AC control signal" as follows: "an alternating current (AC) signal that is supplied to the ballast using additional wiring for the purpose of controlling the ballast and putting the ballast in standby mode."

"DC Control Signal"

In the NOPR, DOE proposed a definition for the term "DC control signal." 74 FR 33171, 33175 (July 10, 2009). In its study of the market, DOE found that some lighting control systems operate by communicating with (*i.e.,* providing a control signal to) the lamp ballasts over a separate wiring system using DC voltage. DOE was unable to locate a definition for "DC control signal" in IEC 62301 or ANSI C82.6–2005. Therefore, DOE proposed a definition for a "DC control signal" in its NOPR to enhance the clarity and understanding of its test procedure. 74 FR 33171, 33175 (July 10, 2009). NEMA commented that it accepted DOE's proposed definition for "DC control signal." (NEMA, No. 21 at p.4) DOE received no dissenting comments to its proposed definition, and, therefore, is adopting the following definition for "DC control signal" as "a direct current (DC) signal that is supplied to the ballast using additional wiring for the purpose of controlling the ballast and putting the ballast in standby mode."

"Power Line Carrier (PLC) Control Signal"

In the NOPR, DOE proposed a definition for the term "power line carrier (PLC) control signal." 74 FR 33171, 33175 (July 10, 2009). In its study of the market, DOE found that some lighting control systems operate by communicating with (*i.e.,* providing a control signal to) the lamp ballasts over the existing power lines that provide the main power connection to the ballast. DOE was unable to locate a definition for "PLC control signal" in IEC 62301 or ANSI C82.6–2005. Therefore, DOE proposed a definition for a "PLC control signal" in its NOPR to enhance the clarity and understanding of its test procedure. 74 FR 33171, 33175 (July 10, 2009). NEMA commented that it accepted DOE's proposed definition for "PLC control signal." (NEMA, No. 21 at p. 4) DOE received no dissenting comments to its proposed definition, and, therefore, is adopting the following definition for "PLC control signal" as "a power line carrier (PLC) signal that is supplied to the ballast using the input ballast wiring for the purpose of controlling the ballast and putting the ballast in standby mode."

"Wireless Control Signal"

In the NOPR, DOE proposed a definition for the term "wireless control signal." 74 FR 33171, 33175 (July 10, 2009). In its study of the market, DOE found that some lighting control systems operate by communicating with (*i.e.,* providing a control signal to) the lamp ballasts over a wireless system, much like a wireless computer network. DOE was unable to locate a definition for a "wireless control signal" in IEC 62301 or ANSI C82.6–2005. Therefore, DOE proposed a definition for a "wireless control signal" in the July 2009 NOPR to enhance the clarity and understanding of its test procedure. 74 FR 33171, 33175 (July 10, 2009). NEMA commented that it accepted DOE's proposed definition for "wireless control signal." (NEMA, No. 21 at p. 4) DOE received no dissenting comments to its proposed definition, and, therefore, is adopting the following definition for "wireless control signal" as "a wireless signal that is radiated to and received by the ballast for the purpose of controlling the ballast and putting the ballast in standby mode." In today's final rule, DOE is not requiring measurement of the power consumed by the ballast through the wireless control signal, because the quantity of power contained in the signal is extremely small (on the order of milliwatts), would be difficult to measure, and is unlikely to appreciably affect ballast power consumption.

*B. Test Method for Measuring Energy Efficiency of Metal Halide Lamp Ballasts*

1. Test Setup and Conditions

a. Lamp Orientation

In the NOPR, DOE proposed to require that lamp orientation for testing be as specified in section 4.3 of ANSI C82.6–2005, which requires vertical, base-up orientation, unless the manufacturer specifies another orientation for that ballast and associated lamp combination. 74 FR 33171, 33176 (July 10, 2009). DOE proposed the base-up orientation, unless the manufacturer specifies another orientation approach for two reasons: (1) Vertical, base-up lamp orientation is the most common in the industry; and (2) the natural stability of the vertical operating position would produce the most repeatable and accurate testing results. PG&E commented during the public meeting that in response to efforts to advocate for improved efficiency for horizontal-burned lamps in California, the industry argued that horizontally-oriented lamps are significantly different products than vertically-oriented products and, thus, need to be treated differently. PG&E raised concerns about measuring the ballast efficiency of ballasts operating horizontally-oriented lamps as compared to more common vertically-oriented lamps. (PG&E, Public Meeting Transcript, No. 11, at p. 11) NEMA also commented on lamp orientation during the public meeting, stating that a uniform test set-up is important. However, NEMA argued that; the ballast is the key to measuring ballast efficiency, not lamp orientation. (NEMA, Public Meeting Transcript, No. 11 at p. 12)

NEMA agreed with using section 4.3 of ANSI C82.6–2005 that specifies vertical, base-up orientation unless specifically designed for another position. (NEMA, No. 21at p. 3) PG&E was supportive after learning that the default lamp orientation is vertical but if the lamp is designed to be operated in a non-vertical position, it shall be tested in this orientation. (NEMA, Public Meeting Transcript, No. 11 at p. 12) With the support of comments from these two interested parties, DOE

maintains that operating the lamp in a vertical, base-up orientation is the most stable in terms of operation of the lamp, and that the lamp operation directly corresponds to the power input of the lamp (power output of the ballast). Therefore, operating the lamp in the most stable orientation is essential for repeatable and reliable measurement of metal halide lamp ballast efficiency. DOE adopts the requirement that ballast efficiency tests be conducted with metal halide lamps in a vertical, base-up orientation unless the manufacturer specifies another orientation for that ballast and associated lamp combination.

b. Power Supply, Ambient Test Temperatures, and Instrumentation

In the NOPR, DOE proposed that power supply characteristics, ambient test temperatures, and instrumentation requirements would all be as specified in section 4.0 of ANSI C82.6–2005. 74 FR 33171, 33176 (July 10, 2009). DOE recognizes that specification of objective test setup characteristics is an important consideration in terms of producing reliable, repeatable, and consistent test results. These aspects of DOE's NOPR and interested party response to them are discussed below.

Section 4.1 of ANSI C82.6–2005 requires that the root mean square (RMS) summation of harmonic components in the power supply be no more than 3 percent of the fundamental voltage and frequency components. Section 4.1 also requires that: (1) The impedance of the power source be no more than 3 percent of the specified ballast impedance; and (2) power supply devices used in the test circuits have a power rating at least five times the wattage of the lamp intended to operate on the ballast under test. These requirements provide reasonable stringency in terms of power quality because they are consistent with other comprehensive industry standards that regulate harmonic content and power supply impedance (*e.g.,* ANSI C78.389–2004). Furthermore, these requirements would be readily achievable and would likely ensure repeatable and consistent measurements. During the December 2008 public meeting, NEMA commented that the requirement for impedance to the power source proposed by the test procedure of no more than 3 percent was too high. (NEMA, Public Meeting Transcript, No. 11 at p. 12) However, NEMA did not provide any rationale to explain its opinion, nor did it provide any supporting data. No additional information was received on this topic during the comment period. Therefore, DOE has not changed its position with respect to the impedance of the power source. Consequently, DOE is adopting the requirement as proposed in the NOPR.

Section 4.2 in ANSI C82.6–2005 requires maintenance of an ambient temperature of 25 °C ±5 °C to reduce potential ballast operating variances caused by large shifts in ambient temperature. Although ambient temperature is not considered critical to metal halide lamp operation and light output, it can affect lamp and ballast system electrical performance. Therefore, temperatures must be controlled for ballast efficiency testing to ensure repeatability and consistency of test results. In the NOPR, DOE also proposed to require that testing be performed in a draft-free environment. 74 FR 33171, 33176 (July 10, 2009). DOE's proposed requirement acknowledged common industry practices whereby airflow is minimized near photometric testing equipment (*e.g.,* through vent and air return locations, baffling of vents, and/or control of blower speed) in order to minimize forced convection cooling that could affect measured photometric and electrical data. NEMA noted that some movement of air is needed to prevent thermal stratification near the testing equipment, but acknowledged that airflow should be minimized. (NEMA, Public Meeting Transcript, No. 11 at p. 14) In response to DOE's proposal, NEMA stated that because current industry standards specify no requirement for draft-free conditions, DOE needs to provide a suitable reference on the conditions of a draft-free environment. NEMA commented further that if no definition is available, then the thermal test methods of C82.6–2005 should be strictly applied, and this reference to a draft-free environment should be removed from the document. (NEMA, No. 21 at p. 1) DOE considered these comments and again reviewed the technical literature on this topic, finding that:

1. Section 4.2, *Ballast Conditions,* of ANSI C82.6–2005 states, "For normal operational tests, the ambient temperature and the temperature of the ballast under test shall be 25 °C ±5 °C." DOE acknowledges that ANSI C82.6–2005 sets the temperature requirement, but not the air movement requirement. However, ANSI C82.6–2005 lists 12 references in section 2.0 *Normative* References that, by their inclusion, are considered indispensable for application of the ANSI standard. DOE reviewed all of the normative references contained in ANSI C82.6–2005 and identified the references that are applicable to metal halide ballasts and lamps, as listed below by ANSI citation and not chronologically by date of publication.

a. ANSI C78.43–2004, "Single-Ended Metal-Halide Lamps," is applicable to this test procedure since it relates to metal halide lamps. Section 5.6.2, *Warm-up* Time, states, "A bare lamp operating in still air at an ambient temperature 25 °C ±5 °C (77 °C ±9 °C) under the conditions described in ANSI C78.389 shall reach the minimum voltage within the time period specified on the relevant data sheet." Other temperature and air conditions are considered in section 6.7, *Lamp Operating Wattage*, which states "The operating wattage of a bare lamp, measured in its designated operating position on a ballast throughout its range of rated supply voltages in a still air ambient temperature of 25 °C ±5 °C (77 °C ±9 °C), shall remain within the wattage limits of the relevant lamp data sheet. Lamps shall operate within these limits throughout the full range of lamp voltage tolerance." (It is noted that in 2007, ANSI C78.43 was updated; however, the temperature and airflow provisions at issue here did not change in ANSI C78.43–2007.)

b. ANSI C78.389–2004, "High-Intensity Discharge—Methods of Measuring Characteristics," section 3.3, *Ambient Condition,* states, "The ambient [condition] in which the lamp is operated shall be maintained at 25 °C ±5 °C and shall be draft-free."

c. ANSI C82.4–2002, "Ballasts for High-Intensity Discharge and Low Pressure Sodium Lamps," does not include any information regarding airflow.

d. ANSI C82.9–1996, "Definitions for High-Intensity Discharge and Low Pressure Sodium Lamps, Ballasts, and Transformer," does not mention and, therefore, does not define "still air" or "draft free."

2. Section 4.2, *Test Room,* of IEC 62301 states that, "The tests shall be carried out in a room that has an air speed close to the appliance under test of ≤ 0.5 m/s. The ambient temperature shall be maintained at (23±5) °C throughout the test. Note: The measured power for some products and modes may be affected by the ambient conditions (e.g., illuminance, temperature)."

3. DOE examined different Illuminating Engineering Society of North America's (IESNA) Lighting Measurement (LM) documents that focus on photometric and electrical measurements of either HID lamps or HID luminaires. DOE's review of applicable IESNA documents is listed

below by LM citation and not chronologically by date of publication.

a. IESNA LM–31–95, "Photometric Testing of Roadway Luminaires Using Incandescent Filament and High Intensity Discharge Lamps," states in section 4.1.3, *Special Photometer Calibration,* "Calibration of HID lamps shall be performed in relatively draft free air at ambient temperature of 25 °C (77 °F) ±5 °C (9 °F)."

b. IESNA LM–35–02, "IESNA Approved Method for Photometric Testing of Floodlights Using High Intensity Discharge or Incandescent Filament Lamps," states in section 3.2, *Ambient Temperatures,* "The ambient temperature of the photometric laboratory shall be maintained at 25 °C ±5 °C (77 °F ±9 °F)." There is no mention of airflow in LM–35–02.

c. IESNA LM–46–04, "IESNA Approved Method for Photometric Testing of Indoor Luminaires Using High Intensity Discharge or Incandescent Filament Lamps," states in section 4.2, *Ambient Temperature,* "For precise measurement of photometric and electric characteristics of luminaires with HID and incandescent lamps, the ambient temperature should be maintained at 25 °C ±5 °C (77 °F ±9 °F). This temperature shall be measured at a point not more than 1.5 meters (5 feet) from the lamp or luminaire and at the same height as the lamp or luminaire. The temperature-sensing device shall be shielded from direct radiation of the light source." LM–46–04 also includes requirements about air movement. Section 4.3, *Air Movement,* states, "The luminaire (or test lamp during calibration) shall be tested in relatively still air. A maximum airflow of 0.08 meters/second (15 ft./minute) is suggested."

d. IESNA LM–47–01, "IESNA Approved Method for Life Testing of High Intensity Discharge (HID) Lamps," states in section 2.3 *Temperature,* "Ambient temperature should be controlled within the limits set by the lamp manufacturer and ballast manufacturer. When the recommended testing temperature range is exceeded, life testing should be suspended." LM–47–01 also includes information about airflow. Section 2.4, *Airflow,* states, "Airflow does not normally impact the performance of HID lamps. However, special test conditions such as unjacketed lamps operating in open areas may require consideration of this effect."

e. IESNA LM–51–00, "IESNA Approved Method for the Electrical and Photometric Measurements of High Intensity Discharge Lamps," states in section 2.3, *Air Movement,* "No special precautions against normal room air movements are necessary."

f. IESNA LM–73–04, "IESNA Guide for Photometric Testing of Entertainment Lighting Luminaires Using Incandescent Filament Lamps or High Intensity Discharge Lamps," states in section 2.2, *Ambient Temperatures,* "The ambient temperature of the photometric laboratory shall be maintained at 25 °C ±5 °C (77 °F ±9 °F)." There is no mention of airflow in LM–73–04.

DOE did not receive any negative comments regarding its proposed ambient temperature requirement. Although the ambient temperature requirements differ in IEC 62301 compared to ANSI C82.6 by 2 °C, DOE is adopting the proposed temperature requirements in the NOPR. DOE believes that its ambient temperature requirement is largely consistent with the IEC standard, and furthermore, 25 °C ±5 °C is the standard temperature for lighting measurements for a variety of light sources including HID, fluorescent, and light-emitting diodes.

In summary, DOE found that airflow requirements vary across the technical literature. IEC 62301 sets an airflow of ≤ 0.5 m/s regardless of the technology. Neither ANSI C82.6–2005 nor the normative references listed in ANSI C82.6–2005 define either of the terms "draft free" or "still air." IESNA LM–51–00, published in 2000, specifically states that no precautions for air movement are necessary. ANSI C78.389, published in 2004, requires "draft-free," yet it does not define the term. LM–46–04, published in 2004, uses the term "relatively still air" and provides the quantitative metric of "0.08 meters/second (15 ft./minute)." DOE continues to believe that it is important to specify a maximum airflow requirement as part of the test conditions, as an acknowledgement of industry practices intended to minimize forced convection cooling that could affect measured photometric and electrical data. NEMA agreed that airflow should be minimized when conducting testing under the test procedure. Although DOE found conflicting information regarding airflow in the context of testing HID lamps and luminaires, DOE has decided to adopt the airflow metric from IEC 62301 (*i.e.,* the airflow shall be ≤ 0.5 m/s) in today's final rule. DOE believes not only that this airflow value will achieve its intended purpose, but also that it is consistent with IEC 62301 (the standard which DOE was directed to consider when developing this test procedure) and is in the range of differing airflow values and definitions DOE observed in its review of ANSI standards and IESNA test methods relevant to this type of equipment.

Section 4.2, *Ballast Conditions,* of ANSI C82.6–2005 requires maintenance of ambient temperature but does not discuss ballast equilibrium. In the NOPR, DOE did not propose to require operation of the ballast until it reached equilibrium. However, NEMA commented that in a proposed revision to sections 4.2 and 4.4 of ANSI C82.6, the ballast would be required to reach equilibrium. (NEMA, No. 21 at p. 1) In response, DOE has considered this issue and concluded that operating the ballast until it reaches equilibrium will produce more reliable results. Therefore, in the final rule, DOE is adopting the language consistent with the following language supplied by NEMA: "The ballast should be operated until it reaches equilibrium." (NEMA, No. 21 at p. 2)

In the NOPR, DOE proposed to adopt the instrumentation requirements prescribed in sections 4.5.1 and 4.5.3 of ANSI C82.6–2005 in order to ensure repeatability and consistency of test measurements. The ANSI requirements for digital voltmeters, ammeters, and wattmeters include a resolution of three and one-half digits and minimum basic instrumentation accuracy of 0.50 percent (*i.e.,* one-half of 1 percent) of the reading from actual with true RMS capability. For analog instruments, the ANSI standard specifies that analog ammeters and voltmeters must have accuracies of ± 0.50 percent up to 800 Hertz (Hz), and that analog wattmeters must have accuracies of ± 0.75 percent up to 1000 Hz for power factors of 50 percent to 100 percent and ± 0.50 percent up to 125 Hz for ballasts with power factors between 0 and 20 percent. In the NOPR, to ensure a full range of coverage, DOE proposed to require all analog wattmeters used on ballasts with power factors less than 50 percent to same accuracy as those for ballasts with power factors less than 20 percent (*i.e.,* ± 0.50 percent up to 125 Hz). 74 FR 33171, 33176 (July 10, 2009).

NEMA agreed in general with the proposed instrumentation and requirements; however, the commenter argued that the DOE test procedure should only permit the use of digital instruments, because digital equipment offers improved repeatability and accuracy of measurement. (NEMA, No. 21 at p. 2) PG&E commented during the public meeting that ANSI allows both digital and analog instrumentation, but finds that digital instruments are the standard industry instrumentation and that analog instruments with low impedance and high accuracy are not common. (PG&E, Public Meeting

Transcript, No. 11, at pp. 19–20) No comments were received specifically addressing the instrument accuracies for any ballasts with power factors between 20 and 50 percent.

DOE agrees that digital equipment offers improved repeatability and accuracy of measurement over analog equipment. However, DOE is concerned about the burden on manufacturers of requiring the use of only digital meters. Furthermore, DOE believes that although the digital meters do provide inherent benefits, analog meters are still able to provide sufficient accuracy and precision when used under the DOE the test procedure. Therefore, this final rule does not require use of measurement equipment that is limited to digital meters exclusively. Instead, the test procedure adopted today allows the flexibility of allowing interested parties to test using either a digital or an analog meter, as long as the device meets the precision requirements of this test procedure. Furthermore, in light of the absence of adverse comment, DOE is adopting the proposed instrument accuracies for ballasts with power factors between 20 percent and 50 percent in this final rule.

Finally, section 4.5.1 instructs that only one analog instrument may be connected to the test circuit at one time to reduce impedance effects on the testing. As set forth in ANSI C82.6–2005, all these instrumentation requirements would facilitate repeatable and consistent testing and measurement. NEMA agreed with the proposed test connection requirements. (NEMA, No. 21 at p. 2) Since DOE did not receive any other comments on this issue and the only comment received agreed with the connection procedure proposed in the July 2009 NOPR, DOE is adopting the proposed connection requirements in this final rule.

c. Lamp Stabilization

A 100-hour seasoning period is commonly used by manufacturers of high-intensity discharge lamp technologies to ensure that the initial, more-rapid depreciation in output caused by impurities has been surpassed.[5] In the NOPR, DOE proposed to adopt the section 4.4 of ANSI C82.6–2005, which requires a 100-hour seasoning period (74 FR 33171, 33177 (July 10, 2009)), and requested comments on whether a preferred alternative lamp seasoning lamp stabilization approach exists within the industry. *Id.* NEMA commented on lamp and ballast equilibrium and stabilization, but did not provide any comments specifically addressing lamp seasoning. Because DOE did not receive any comments to the contrary and because a 100-hour seasoning period is the industry standard, DOE is adopting this requirement in today's final rule.

In the NOPR, DOE evaluated the requirements of the basic stabilization method prescribed in section 4.4.2 of ANSI C82.6–2005. *Id.* NEMA commented on basic stabilization and recommended that DOE adopt the revised ANSI C82.6 text regarding basic stabilization. (NEMA, No. 21 at p. 1) In order to respond to the comment, DOE compared the text of ANSI C82.6–2005 section 4.4.2 with the text supplied by NEMA of the expected revised ANSI C82.6 section 4.4.2. The text supplied by NEMA states that fast-acting or make-before-break switches are recommended. DOE finds this test procedure clarification helpful, and, therefore, as part of today's final rule, DOE is adopting the revised language suggested by NEMA regarding recommendations of switches to prevent the lamps from extinguishing during switchover.

Operational stability has been defined as the lamp operating in a power equilibrium determined by three consecutive measurements, 5 minutes apart, of the lamp power where the three readings are within 2.5 percent. (NEMA, No. 21 at p. 2) In the NOPR, DOE proposed that the lamp and ballast system be considered stable for testing purposes when the lamp's electrical characteristics vary by no more than 3 percent in three consecutive 10- to 15-minute intervals measured after the minimum 30-minute warm-up period specified in section 4.4.2 of ANSI C82.6–2005. 74 FR 33171, 33177 (July 10, 2009). NEMA suggested language for an alternative stabilization method for electronic ballasts, which provided that the same lamp will be driven by the ballast under test until the ballast reaches operational stability. (NEMA, No. 21 at p. 2) DOE agrees with NEMA's suggestion above for revision of section 4.4.3.2 of ANSI C82.6 because this provides more specificity for determining stability. DOE is adopting NEMA's suggested revision because this provides more specificity for determining stability. Rather than simply assuming that 15 minutes is sufficient to determine stability, the testing agent will take 3 measurements 5 minutes apart (3 times 5 minutes = 15 minutes), and as long as the three readings are within the 2.5-percent tolerance, then the testing agent can determine the ballast is operationally stable. Thus, DOE is adopting the requirement pertaining to operational stability in order to add more accuracy to the test procedure.

In the NOPR, DOE proposed that electrical measurements should be taken within 2 minutes after the stabilization period. 74 FR 33171, 33177 (July 10, 2009). NEMA commented that the current revised requirements of section 4.4.3.3 of ANSI C82.6 provide that the electrical measurements should be taken within 5 minutes after the stabilization period. (NEMA, No. 21 at p. 2) DOE agrees with NEMA's suggestion for revision of section 4.4.3.3 of ANSI C82.6. DOE believes that given the more technically rigorous definition of stability (as discussed in section III.B.1.c above), the measurements no longer need to be taken within 2 minutes after stabilization. Under the basic stabilization method, the measurements are taken within 5 minutes. DOE has concluded that further consistency would be provided by also requiring measurements to be taken within 5 minutes for the alternate stabilization method. Measurements will be taken within the same amount of time under either stabilization method. Moreover, DOE does not expect accuracy to be affected by changing the time period for the required measurements from 2 minutes to 5 minutes. This change in response to NEMA's comment is expected to maintain test accuracy, while reducing test burden. Therefore, in today's final rule, DOE is requiring measurements to be taken within 5 minutes after stabilization.

2. Test Measurements

DOE requires that test measurements of metal halide lamp ballast operation be used in the calculation of ballast efficiency, as discussed in section III.B.3, "Ballast Efficiency Calculation," of this document. This calculated ballast efficiency is an integral part of the metal halide lamp ballast test procedures established under 42 U.S.C. 6293.

In the NOPR, DOE proposed test measurements for metal halide lamp ballasts to require that ballast operation testing be conducted according to the same requirements set forth in section 6.10, "Ballast Power Loss," of ANSI C82.6–2005. 74 FR 33171, 33177 (July 10, 2009). NEMA commented that measurements of ballast power losses should be based on the latest draft of ANSI C82.6 (now being revised by ANSI), but NEMA did not specify what aspects of the draft standard should be incorporated into DOE's test method. (NEMA, No. 21 at p. 3)

[5] IESNA LM–54–99, "Lamp Seasoning," is the lighting measurement (LM) document to which the industry refers for seasoning requirements for lamp and ballast photometric and electrical testing. Available at: *http://www.ies.org/shop/*.

DOE tried to find a current (as of winter 2009) draft of revised ANSI C82.6, but was unable to obtain a copy. Repeatedly, DOE was told by members of NEMA and the ANSI committee revising the document that the 2005 version of ANSI C82.6 is the latest draft. DOE learned that a revised version would not be published until at least March 2010. DOE received a copy of Draft #8 (dated April 15, 2009) in May 2009. DOE compared the text of section 6.10, *Ballast Power Loss,* in ANSI C82.6–2005 to the text in section 6.13, *Ballast Power Loss,* in ANSI C82.6 Draft-April 15, 2009. DOE found a total of 14 words different between the two versions of the text. More specifically, the 2005 version uses the term "potential coil" in two places, as shown below in the 2009 draft text, with the bracketed language indicating the use in the 2005 version. The 2009 draft version also added the following text: "The meters must measure using ranges that minimize these differences." With that introductory explanation, section 6.13, *Ballast Power Loss,* of ANSI C82.6 Draft-April 15, 2009 reads as follows:

"The power loss should be determined by the wattmeter (power analyzer) difference method, in which the output power is subtracted from the input power. If the instruments are connected as shown in Figure 2, either the voltmeter should be disconnected when the reading of input wattage is taken or a correction should be made to compensate for the power consumed by the voltmeter. It should also be noted that with the connections shown in Figure 2, the wattmeter reading will include the power consumed by the wattmeter itself [potential coil]. This power in the wattmeter [potential coil]; therefore, must be calculated and subtracted to obtain the actual input power. To minimize deviations in power loss calculations, it is recommended that where feasible the same wattmeter and the same potential and current ranges be used to measure both input and lamp watts. Note that in determining ballast losses, it must be kept in mind that when one accurate number is subtracted from a nearly equal accurate number, the percent error of difference may be very great. The deviation in watts loss figures may be as high as ± 10%–15% when wattmeters with a stated accuracy of ± 0.5% are employed. The meters must measure using ranges that minimize these differences."

Thus, the ballast power loss section specifies measurements of output power to the lamp and input power to the ballast using a wattmeter, and it specifies the proper instrument connections. The section also provides the necessary guidance and methods for eliminating or compensating for the power consumption of a voltmeter (when connected) and the wattmeter. In summary, the ballast power loss section of ANSI C82.6–2005 provides a measurement of power using a well-defined, common electrical industry standard test with dedicated equipment.

In general, DOE has decided to adopt the test measurement provisions proposed in the July 2009 NOPR in today's final rule. Based on the comparison between the published ANSI C82.6–2005 and the draft of the revision dated April 15, 2009, DOE found little substantive change between the ballast power loss sections. If new or more substantive changes occur in a later published revision of ANSI C82.6, DOE will consider revising the test procedure in the future. Other, specific comments on the proposed test measurement provisions are addressed immediately below.

In the NOPR, DOE proposed using a wattmeter to measure ballast power. 74 FR 33171, 33177 (July 10, 2009). In its comments, NEMA indicated a preference for the use of a multi-channel wattmeter in order to minimize measurement uncertainty. (NEMA, No. 21 at p. 3) In response, DOE acknowledges that the use of a multi-channel wattmeter is one way to minimize measurement uncertainty, and notes that today's test procedure does allow for the use of multi-channel wattmeters. However, there are other ways of reducing uncertainty such as taking sequential measurements using the meter. Therefore, DOE does not find it necessary to require the use of a multi-channel wattmeter in the final rule.

In the NOPR, DOE proposed that the wattmeter used when testing be a "true RMS wattmeter." 74 FR 33171, 33177 (July 10, 2009). NEMA objected to the use of the term "true RMS wattmeter," arguing that there is no such thing as a "true RMS wattmeter." NEMA stated that "[v]oltage and current measuring devices can provide true RMS values, but the power consumed is the time average of the instantaneous voltage and current waveforms, by definition, for any waveform." As a more technically-accurate alternative, NEMA suggested that DOE use the term "'wattmeter' capable of indicating true RMS power in watts'" could be used. (NEMA, No. 21 at p. 3) DOE acknowledges that a "true RMS wattmeter" does not exist and cannot require the use of a meter that does not exist. Therefore, DOE has adopted use of the expression "wattmeter capable of indicating true RMS power in watts" in the final rule.

In the NOPR, DOE proposed adopting the test circuit connection requirements of sections 4.5 and 6.10 of ANSI C82.6–2005 in the test procedure. 74 FR 33171, 33181 (July 10, 2009). NEMA expressed agreement with the proposed connection requirement in the July 2009 NOPR. (NEMA, No. 21 at p. 2) Because DOE received no other comments regarding connection requirements, DOE is adopting the requirements for connections proposed in the July 2009 NOPR in this final rule.

3. Ballast Efficiency Calculation

In the NOPR, DOE proposed that ballast efficiency be calculated as the measured output power to the lamp divided by the measured input power to the ballast ($P_{out}/P_{in}$). DOE also proposed that the $P_{out}$ and $P_{in}$ terms be determined according to the Ballast Power Loss method described in section III.C.2, "Test Measurements," of the NOPR, with both output and input power measured in accordance with section 6.10 of ANSI C82.6–2005. 74 FR 33171, 33177 (July 10, 2009). DOE did not receive any comments on the ballast efficiency calculation. It is further noted that this measure of efficiency represents the metric used in the energy conservation standard prescribed by the statute. (42 U.S.C. 6295(hh)(1)) This is a standard method of calculating efficiency. Therefore, for the above reasons; DOE is adopting $P_{out}/P_{in}$ as the ballast efficiency calculation in today's final rule.

*C. Test Method for Measuring Standby Power of Metal Halide Lamp Ballasts*

1. Overview of Test Method

In relevant part, EPCA directs DOE to establish test procedures to include standby mode, "taking into consideration the most current versions of Standards 62301 and 62087 of the International Electrotechnical Commission." (42 U.S.C. 6295(gg)(2)(A)) IEC Standard 62087 applies to audio, video, and related equipment but not to lighting equipment. Thus, DOE has determined that IEC Standard 62087 is not suitable to be applied to this rulemaking. Instead, DOE developed today's test procedure to be consistent with IEC Standard 62301. In addition, to develop a test method that would be familiar to metal halide lamp ballast manufacturers, DOE also referenced language and methodologies presented in ANSI C82.6–2005, "Ballasts for High-Intensity Discharge Lamps—Methods of Measurement."

Generally, today's final rule adopts test procedure provisions for measuring standby power that include the following steps: (1) A signal is sent to the ballast instructing it to reduce light output to zero percent; (2) The main input power to the ballast is measured; and (3) The power from the control signal path is measured in one of three

ways, depending on how the signal from the control system is delivered to the ballast. Further detail on DOE's adopted methodology for measuring standby power of metal halide lamp ballasts is presented below. DOE did not receive any adverse comments on the test procedure's standby provisions as a whole, but it did receive comments on this topic pertaining to specific sections of the test procedure. These detailed comments will be addressed in the following sections.

2. Test Method and Measurements

In the portion of the metal halide lamp ballast test procedure dealing with standby power measurement, the test procedure requires that a signal be sent to the ballast under test, instructing the ballast to have zero percent light output using the appropriate communication protocol or system for that unit. Next, the input power (in watts) to the ballast is measured in accordance with ANSI C82.6–2005. Finally, the power from the ballast control signal path is measured using a method for an AC, DC, or PLC control signal path, consistent with the type of path that the ballast employs.

The measurement of input power to the ballast from the main electricity supply during standby mode is based on the approach in ANSI C82.6–2005, section 6. This measurement parallels the approach DOE is requiring for measuring the active mode power consumption for input power (watts) to the ballast in accordance with ANSI C82.6–2005. Thus, test measurements of ballast input power are conducted in accordance with the appropriate sections of the industry test standard.

As adopted in today's final rule at 10 CFR 431.324(c), manufacturers must measure the ballast's control signal power. DOE understands there are four possible ways of delivering a control signal to a metal halide lamp ballast: (1) A dedicated AC control signal wire; (2) a dedicated DC control signal wire; (3) a PLC control signal over the main supply input wires; and (4) a wireless control signal. DOE is interested in measuring the power consumed by the lighting control signal and is providing three methods for measuring that power, depending on which type of system is being used. As explained above, DOE did not propose in the NOPR to measure the power supplied to a ballast using a wireless control signal because DOE estimates that the power supplied to a ballast using a wireless signal would be very small (in milliwatts), difficult to measure, and unlikely to appreciably affect ballast power consumption. The three circuit diagrams in the final rule require measurement of the control signal power using either a wattmeter (for the AC control signal wiring and the PLC control signal) or a voltmeter and ammeter (for the DC control signal). DOE is incorporating three circuit diagrams at 10 CFR 431.324(c) in today's final rule to present clearly the intended methods of measurement for each type of control system communication protocol.

The test procedure proposed in the July 2009 NOPR characterized metal halide lamp ballasts featuring standby mode as utilizing only one type of control signal connection. However, it is technically feasible for one metal halide lamp ballast to feature more than one type of control signal connection. Therefore, DOE has revised the language proposed in the NOPR for 10 CFR 431.324(c)(3) of the test procedure and is instead adopting the following clarified provision as part of today's final rule: "The power from the control signal path will be measured using all applicable methods described" in subsections (c)(3)(i)–(iii) of the test procedure (*i.e.,* AC control signal, DC control signal, and PLC control signal) so that the procedure is capable of determining the maximum energy consumption of a metal halide lamp ballast in standby mode.

DOE recognizes that measuring the power input into a ballast utilizing a PLC control signal will involve measurement of both the power being used by the ballast and the control signal power. During the public meeting, it was discussed that the PLC control signal would be a series of short bursts. These bursts would be expected to use less than a watt of power. (NEMA, Public Meeting Transcript, No. 11 at p. 36) PG&E commented during the public meeting that it is not the PLC control signal that needs to be measured, but the standby power of the equipment receiving the signal. (PG&E, Public Meeting Transcript, No. 11 at p. 36) However, DOE stated in response to PG&E that DOE wanted to make sure that there would not be a lost opportunity to account for it, to the extent a significant amount of energy is consumed by the control signal. (DOE, Public Meeting Transcript, No. 11 at p. 37)

Therefore, in order to measure each of these powers, the equipment used must be able to measure the appropriate frequencies (*i.e.,* 60 hertz for the power used by the ballast and higher frequency for the control signal power). During the public meeting, DOE reasoned that in order to measure the control signal power and isolate the high-frequency signal from the 60 hertz-signal, one would have to use a high-pass filter. (DOE, Public Meeting Transcript, No. 11 at p. 43) Therefore, the July 2009 NOPR required that "[t]he wattmeter must have a frequency response that is at least 10 times higher than the PLC being measured to measure the PLC signal correctly. The wattmeter must also be high-pass filtered to filter out power a 60 Hz." 74 FR 33171, 33185 (July 10, 2009). DOE received no comments regarding this filter during the comment period. However, as part of the fluorescent lamp ballast standby test procedure rulemaking, DOE did receive a comment from NEMA regarding PLC signals and proper equipment. In that comment, NEMA stated that equipment used to measure PLC power must be capable of measuring the appropriate frequencies, as the power distributed over the input ballast wiring would also include the PLC power. 74 FR 54445, 54451 (Oct. 22, 2009). DOE's statement during the metal halide lamp ballast public meeting (December 2008) was consistent with the comment NEMA provided on the fluorescent ballast standby test procedure, and DOE believes that the situations regarding PLC signals are analogous for both types of ballasts. Thus, in order to account for PLC signal energy use, DOE has adopted the wattmeter requirements as proposed in the NOPR for PLC measurements in this final rule.

The People's Republic of China ("P.R. China") commented that DOE did not consider issues with electromagnetic compatibility associated with the PLC signal in the July 2009 NOPR. P.R. China is concerned that electromagnetic interference from the PLC signal could significantly affect the measurement of standby power. (P.R. China, No. 20 at p. 3) DOE understands that if the PLC signal were a very high-frequency signal (*e.g.,* with a frequency in the megahertz (MHz) range), then the electromagnetic interference from the signal could affect the standby power measurement significantly (*i.e.,* cause variances in the input power measurement by more than a watt). A similar comment was submitted by P.R. China regarding the fluorescent lamp ballast standby test procedure. DOE determined that PLC signals to fluorescent ballasts are on the order of 20 kilohertz (kHz). 74 FR 54445, 54451–52 (Oct. 22, 2009). DOE notes that the Federal Communications Commission only regulates PLC measurements from 150 kHz to 30 MHz so that conducted emissions in this frequency range do not interfere with nearby radio receivers. (47 CFR 15 subpart B) At this time, DOE does not know of any metal halide lamp ballasts with PLC controls. Because shielding

PLC measurements from electromagnetic interference for ballasts is unnecessary for the reasons explained above, DOE has not modified the test procedure to include shielding in today's final rule. However, in the future, DOE will monitor the situation in the event a manufacturer develops a metal halide lamp ballast utilizing a PLC control signal.

3. Combining Measurements and Burden

In the NOPR, DOE proposed to require equipment manufacturers subject to this rulemaking to take the two required measurements (*i.e.,* the main input power and the control signal power in standby mode), but did not tell manufacturers how to combine these values or use them in equations pertaining to energy efficiency. 74 FR 33171, 33178 (July 10, 2009). DOE received no comments regarding these measurements. DOE will study how best to use these measurements of standby mode power consumption in a separate rulemaking to review and possibly amend the energy conservation standards for metal halide lamp ballasts, which DOE is required to complete by January 1, 2012, pursuant to EISA 2007. (42 U.S.C. 6295)(hh)(2)).

DOE further notes that today's final rule is designed to produce results that measure standby power consumption in an accurate and repeatable manner, and should not be unduly burdensome on manufacturers to conduct. These objectives are expected to be met by the final rule, particularly given that it is based upon IEC 62301 and follows testing approaches used in ANSI C82.6–2005. Commenters raised a number of issues which could have bearing on the accuracy and repeatability of the results generated under the metal halide lamp ballast test procedure, but these issues have been fully addressed in today's final rule.

*D. Scope of Applicability of Standby Power Test Procedure*

This rulemaking broadly addresses ballasts that operate metal halide lamp fixtures, but as explained below and in the July 2009 NOPR, the scope of applicability of the test procedure's standby provisions is expected to be more limited. 74 FR 33171, 33178 (July 10, 2009). After studying the market of commercially-available metal halide lamp ballasts and the statutory definition of "standby mode," DOE is interpreting this mode as only applying to certain ballasts under certain operating conditions. Standby mode only applies to ballasts that incorporate some kind of lighting control system interface, because these ballasts appear to be the only ones that satisfy the EPCA definition of "standby mode" (which DOE is codifying into its regulations). Specifically, DOE found that only metal halide lamp ballasts with a lighting-control system interface can be "connected to a main power source" and "facilitate the activation or deactivation of other functions (including active mode) by remote switch (including remote control), internal sensor, or timer." (42 U.S.C. 6295(gg)(1)(A)(iii)) Many of these ballasts are designed with advanced circuitry that adds features, including intelligent operation.[6] As discussed in section III.A above, one example of these ballasts would be a DALI-enabled ballast. DALI-enabled ballasts have internal circuitry that is fundamentally part of the ballast design that remains active and consumes energy, even when the ballast is not operating any lamps. DOE is unaware of any types of ballasts, other than those with a lighting-control system interface that would perform standby functions.

As explained above, not all metal halide lamp ballasts need to be tested for standby mode power, because many ballast designs do not meet the statutory definition for operation in standby mode. In fact, most metal halide lamp ballasts sold today are not capable of operating in standby mode, rendering the standby provisions of the test procedure inapposite in terms of those units. Generally, these excluded ballasts are ones that are not active components of a lighting control system; instead, they are controlled simply by having the active power disconnected through use of a manual switch, occupancy sensor, or other system. For these ballasts, light output is reduced to zero percent by disconnecting the main power. However, the ballast would not be in standby mode, as defined by EPCA, because it is no longer connected to a main power source. Thus, the metal halide lamp ballasts subject to standby mode power measurements are those that incorporate some electronic circuit or auxiliary device enabling the ballast to communicate with and be part of a lighting control system (*e.g.,* stand-alone photosensor and ballast or a centralized system). NEMA accepted the DOE approach to apply the standby mode test procedure to metal halide lamp ballasts that incorporate a circuit to enable the ballast to communicate with lighting control systems. (NEMA, No. 21. at. p. 4) In light of the above, DOE is adopting this approach as part of today's final rule.

*E. Effective Date of Standby Mode Test Method*

As discussed in section II of this final rule, EPCA requires DOE to consider standby mode and off mode for all energy conservation standard final rules issued after July 1, 2010. (42 U.S.C. 6295(gg)(3)(A)) In addition, EPCA states that not later than January 1, 2012, DOE shall publish a final rule to determine whether the standards established for metal halide lamp fixtures should be amended. (42 U.S.C. 6295(hh)(2)) Because this rulemaking may amend the standards for metal halide lamp fixtures but would be issued after July 1, 2010, DOE must consider standby mode and off mode power consumption in that future energy conservation standards rulemaking.

Including these test procedure provisions in the CFR will provide manufacturers additional time to become familiar with standby mode power consumption of certain metal halide lamp ballasts. As DOE conducts energy conservation standards rulemaking reviewing the energy conservation standards for metal halide lamp ballasts, it will take into consideration standby mode power consumption. During that rulemaking, interested parties will already be familiar with the test procedure for measuring and calculating standby mode power consumption and will be better able to understand any ballast design implications that may affect the efficiency of metal halide lamp ballasts.

As discussed in section II and as provided in the amendments at 10 CFR 431.324(c), manufacturers of metal halide lamp ballasts would not need to perform standby measurements under this test procedure to certify compliance with the energy conservation standards for metal halide lamp fixtures that came into effect on January 1, 2009, because those statutory standards do not account for standby mode power consumption. In terms of codification in the CFR, the effective date of this test procedure on metal halide lamp ballasts is 30 days after the date of publication in the **Federal Register.** However, manufacturers will only be required to use the test procedure's standby mode provisions to demonstrate compliance with any future energy conservation standard on the effective date of a final rule establishing amended standards for metal halide lamp fixtures that addresses standby mode power consumption (at which time, DOE

[6] "Intelligent operation" means a device which is able to receive information, evaluate that information, and take appropriate action based upon that information. For example, certain ballasts contain a circuit which, when it receives a signal, then takes action to dim light output to a certain level or to switch off the lamp (or other action).

would remove the limitation in 10 CFR 431.324(c)). However, DOE notes that on or after a date 180 days after the date of publication of this final rule, for any representations made about standby mode energy consumption for these products, the standby provisions of this test procedure must be used to measure standby power. (42 U.S.C. 6293(b)(18) and (c)(2))

*F. Units To Be Tested*

Accurate testing of metal halide lamp ballasts requires a statistically meaningful sample of test units to certify that the true mean efficiency of a basic model meets or exceeds the applicable energy conservation standard. In an effort to meet this testing need and to reduce the testing burden on manufacturers, DOE considered four factors in developing sample size requirements for the approach proposed in its July 2009 NOPR: (1) Providing a highly statistically valid probability that a basic model tested meets applicable energy conservation standards; (2) providing a highly statistically valid probability that a manufacturer preliminarily found to be in noncompliance will actually be in noncompliance; (3) assuring compatibility with other sampling plans DOE has promulgated; and (4) minimizing manufacturers' testing time and costs. 74 FR 33171, 33179 (July 10, 2009).

In the July NOPR, DOE proposed a sampling method similar to the method established for fluorescent ballasts (*see* 56 FR 18677, 18682 (April 24, 1991)). At least four ballasts randomly selected would be tested, and a 99-percent confidence limit would be applied. DOE received few comments regarding the units to be tested; therefore, DOE is adopting the proposed language with minor modifications. Comments on this topic and related modifications are discussed below.

In the NOPR, DOE proposed using coefficients of 0.99 for the lower percent confidence limit and 1.01 for the upper confidence limit. 74 FR 33171, 33179 (July 10, 2009). No comments were received regarding the coefficients. The coefficients are intended to reasonably reflect variations in material and in the manufacturing and testing processes. This statistical process applies an industry standard 99-percent confidence level commonly used for evaluation of large populations and is the confidence level applied to other DOE test procedures for products and equipment subject to energy conservation standards, such as compact fluorescent lamps and external power supplies. Therefore, in today's final rule DOE adopts the coefficients presented in the NOPR.

DOE received two comments from interested parties on the measurement of units to be tested. First, NEMA stated that it accepts the proposed sampling procedure consistent with the approach DOE adopted for fluorescent lamp ballasts. This sampling procedure includes randomly selected ballast samples, not less than four, to calculate the represented value of energy efficiency and to apply the 99-percent confidence limits as proposed. Additionally, NEMA suggested replacing the term "calculated value of energy efficiency" with use of "represented value of energy efficiency" throughout the test procedure. (NEMA, No. 21 at p. 6) DOE notes that in the NOPR, it had used the phrase "calculated value of energy efficiency" in the preamble section of the NOPR, and the phrase "represented value of energy efficiency" in the regulatory text. DOE also notes that for fluorescent lamp ballasts, the phrase "represented value of energy efficiency" is used throughout; therefore, DOE is adopting this phrase and will use it consistently in today's final rule, as suggested by the commenter.

Second, P.R. China commented that the sampling procedure proposed for metal halide lamp ballasts is based on the current sampling procedure used by DOE for fluorescent lamp ballasts. Because there are some differences between a fluorescent lamp ballast and a metal halide lamp ballast, P.R. China requested that DOE provide further comment on the applicability of the sampling procedure for fluorescent lamp ballasts to metal halide lamp ballasts. (P.R. China, No. 20 at p. 3) In response, DOE acknowledges that the sampling procedure is consistent with the approach DOE has used for fluorescent lamp ballasts. The sample size that DOE is adopting in this final rule is a minimum of four. The number of tests must increase until the results meet this rule's requirements, meaning that if the first four samples tested do not have a represented value of energy efficiency within the mean of the sample divided by the applicable coefficient, the manufacturer must continue testing samples until the represented value of energy efficiency is satisfied or the manufacturer cannot submit the data for compliance and certification. DOE believes that any differences between metal halide lamp ballasts and fluorescent lamp ballasts will be alleviated by the degree of the confidence limit (*i.e.,* 99-percent).

Accordingly, in light of the above considerations and comments, DOE is adopting the sampling procedure below for testing metal halide lamp ballast energy efficiency. The adopted procedure for metal halide lamp ballasts is consistent with the approach used for fluorescent lamp ballasts and requires randomly selecting and testing a sample of production units (not fewer than four) of a representative basic model. A simple average of the values would be calculated, which would be the actual mean value of the sample. For each representative model, a sample of sufficient size (no less than four) would be selected at random and tested to ensure that:

1. The represented value of energy efficiency is no less than the higher of the mean of the sample or the upper 99-percent confidence limit of the true mean divided by 1.01.

2. The represented value of energy efficiency is no greater than the lower of the mean of the sample or the lower 99-percent confidence limit of the true mean divided by 0.99.

*G. Submission of Data*

Metal halide lamp fixture manufacturers have been required to comply with the statutory standards in EISA 2007 regarding ballast efficiency since January 1, 2009. However, since a final test procedure has not been published until this final rule, manufacturers could not submit data demonstrating compliance. In the NOPR, DOE proposed that the manufacturer, or other entity performing the test on behalf of the manufacturer, would be required to provide certification in a report submitted before a date one year after publication of the test procedure final rule, which would include for each basic model: (1) The equipment type; (2) manufacturer's name; (3) private labeler's name(s) (if applicable); and (4) manufacturer's model number(s). 74 FR 33171, 33180 (July 10, 2009). NEMA accepted the DOE proposal for data submission by certification report. (NEMA, No. 21 at p. 6) Given the absence of any adverse comment, DOE is adopting the submission of data requirements proposed in the NOPR as part of this final rule.

Specifically, in submitting the report, manufacturers certify that the testing was completed in accordance with the applicable test requirements prescribed pursuant to 42 U.S.C. 6293(b) of EPCA, as amended. Any change to a basic model that changes energy consumption constitutes a new basic model. If such a change reduces consumption, the new model would be considered in compliance with the standard without any additional testing. However, if such

a change increases consumption while meeting the standard, then all certification information applicable to testing of the new basic model would be required to be submitted.

*H. Enforcement Provisions*

A Federal energy conservation standard became effective for metal halide lamp ballasts on January 1, 2009; therefore, use of the appropriate application of the testing procedure for this equipment for purposes of compliance with and enforcement of the efficiency requirements is required upon the effective date of this final rule. In the NOPR, DOE proposed applying to metal halide lamp ballasts the same basic requirements for enforcement currently in place for other lighting equipment. 74 FR 33171, 33180 (July 10, 2009). NEMA commented that it recognized and supported the need for inclusion of enforcement provisions for verification of energy efficiency claims. (NEMA, No. 21 at p. 6) As part of today's final rule, DOE is adopting the proposed testing certification as presented in the NOPR.

If DOE receives written information about the performance of metal halide lamp ballasts indicating that one or more basic models may not be in compliance with the energy conservation standard, DOE may conduct independent testing of those basic models. The results of this testing would serve as the basis for any enforcement actions related to the application of these metal halide lamp ballast test procedures.

*I. Provisions for Compliance, Certification, and Enforcement*

The purpose of establishing compliance, certification, and enforcement regulations is to provide reasonable assurance that manufacturers appropriately test and accurately represent the performance characteristics of covered equipment. Accordingly, today's final rule specifies certification, compliance, and enforcement requirements for ballasts that are part of metal halide lamp fixtures. It is noted that DOE plans to address certification, compliance, and enforcement provisions for all consumer products and commercial and industrial equipment covered by EISA 2007 in a separate proceeding, a rulemaking which would not only provide a centralized location for those provisions but which would also promote consistency of such requirements. At that time, DOE will consider moving the certification, compliance, and enforcement provisions being adopted in today's final rule to a different section in the CFR dedicated to compliance, certification, and enforcement.

## IV. Procedural Issues and Regulatory Review

*A. Review Under Executive Order 12866*

Today's regulatory action is not a "significant regulatory action" under section 3(f) of Executive Order 12866, "Regulatory Planning and Review." 58 FR 51735 (Oct. 4, 1993). Accordingly, this proposed regulatory action was not subject to review under the Executive Order by the Office of Information and Regulatory Affairs (OIRA) in the Office of Management and Budget (OMB).

*B. Review Under the Regulatory Flexibility Act*

The Regulatory Flexibility Act (5 U.S.C. 601 *et seq.,* as amended by the Small Business Regulatory Enforcement Fairness Act of 1996) requires preparation of an initial regulatory flexibility analysis for any rule that, by law, must be proposed for public comment, unless the agency certifies that the proposed rule, if promulgated, will not have a significant economic impact on a substantial number of small entities. A regulatory flexibility analysis examines the impact of the rule on small entities and considers alternative ways of reducing negative effects. Also, as required by Executive Order 13272, "Proper Consideration of Small Entities in Agency Rulemaking," 67 FR 53461 (August 16, 2002), DOE published procedures and policies on February 19, 2003, to ensure that the potential impact of its rules on small entities are properly considered during the DOE rulemaking process. 68 FR 7990. DOE made its procedures and policies available on the Office of the General Counsel's Web site at *http://www.gc.doe.gov.*

Today's final rule adopts test procedures that are to be used to determine compliance with the energy conservation standard for certain metal halide lamp fixtures. DOE reviewed today's final rule under the provisions of the Regulatory Flexibility Act and the policies and procedures published on February 19, 2003. For the reasons explained in the July 2009 NOPR, DOE certified that the proposed rule would not have a significant economic impact on a substantial number of small entities manufacturing the equipment that are the subject of this rulemaking. 74 FR 33171, 33182 (July 10, 2009).

The test procedure incorporates by reference provisions from ANSI Standard C82.6–2005 for the measurement of ballast efficiency. ANSI Standard C82.6–2005 is the current and active industry testing standard for metal halide lamp ballasts. In referencing this industry test method, DOE anticipates that there would be no incremental increase in testing cost or burden for covered equipment. Manufacturers are familiar with the application of ANSI Standard C82.6–2005 and should have the equipment necessary to conduct the performance measurements. Furthermore, DOE understands that manufacturers of covered equipment are using this industry test method when they make any representation of their product's efficiency in the public domain.

Today's final rule also establishes a methodology for the measurement of standby mode power consumption for certain metal halide lamp fixtures. DOE based its method on techniques and approaches in ANSI Standard C82.6–2005 and IEC Standard 62301. DOE uses the same test equipment, accuracy requirements, and test conditions from ANSI Standard C82.6–2005. Although DOE is unaware of any metal halide lamp ballasts commercially available today that are capable of operating in standby mode, ballasts incorporating features that may encounter standby mode may enter the market as they have for fluorescent lamp ballasts. Due to the fact that DOE's method is based on the industry standards and does not exceed the equipment and accuracy recommendations in NEMA's comments (see III.A, in the discussion of "ballast efficiency"), DOE does not believe the standby mode test procedure will add significant costs. Of the two measurements required in the standby mode test procedure, the $P_{in}$ measurement is common to both the active mode and the standby mode test procedure. Measurement of the control signal is a minimal additional test, but one that technicians can conduct with measurement equipment readily available.

Accordingly, DOE has not prepared a regulatory flexibility analysis for this rulemaking. DOE's certification and supporting statement of factual basis was provided to the Chief Counsel for Advocacy of the Small Business Administration for review under 5 U.S.C. 605(b). DOE did not receive any comments regarding the impact on small business manufacturers of metal halide lamp fixtures. Thus, DOE reaffirms and certifies that this rule will have no significant economic impact on a substantial number of small entities.

*C. Review Under the Paperwork Reduction Act of 1995*

Today's final rule would require each manufacturer of metal halide lamp

fixtures (*i.e.,* fixtures that incorporate metal halide lamp ballasts), or entity performing tests on behalf of the manufacturer, to maintain records about how they determined the energy efficiency measurement—and on the date of any amended standards incorporating standby power usage, standby power mode energy consumption measurement—of their equipment (*see* regulatory language at 10 CFR Part 431 subpart S). The rule also requires each manufacturer to make a one-time submission to DOE, stating that it is complying with the applicable energy conservation standards and test procedures, in addition to certification reports that set forth the energy performance of each basic model that it manufactures. The certification reports to DOE are submitted one time for each basic model, either when the requirements go into effect or when the manufacturer begins distribution of a new basic model. The collection of information is necessary for implementing and monitoring compliance with the efficiency standards and testing requirements for metal halide lamp fixtures, as mandated by EPCA. Manufacturers would become subject to these reporting and certification requirements once both a final rule for the metal halide lamp ballast test procedure and a standard for the metal halide lamp fixture energy conservation standard are effective. The metal halide lamp fixture energy conservation standard referenced earlier is already effective (EISA 2007). Upon the effective date of this final rule, manufacturers would become subject to these reporting and certification requirements.

DOE estimates the total annual reporting and recordkeeping burden imposed on manufacturers of metal halide lamp fixtures by today's proposed rule would be 23,680 hours per year. DOE estimates that the number of covered manufacturing firms would be approximately 148, and the total annual recordkeeping burden from compliance with the proposed rule would be 160 hours per company. Thus, 148 firms × 160 hours per firm = 23,680 hours per year. In developing this burden estimate, DOE considered that each manufacturer is required to comply with the energy conservation standards for metal halide lamp fixtures set by the statute for ballasts manufactured on or after the effective date of the relevant statutory provisions (*i.e.,* January 1, 2009). DOE understands that manufacturers already maintain the types of records the final rule would require them to keep, and believes the collection of information required by this final rule is the least burdensome method of meeting the statutory requirements and achieving the program objectives of the compliance certification program for these products and equipment.

An agency may not conduct or sponsor, and a person is not required to respond to, a collection of information unless it displays a currently valid OMB control number. DOE will submit this information collection request to OMB for review and approval. Notice of OMB approval and the control number will be published in the **Federal Register**.

*D. Review Under the National Environmental Policy Act*

DOE is establishing a final rule for metal halide lamp ballast test procedure that it expects will not only be used to test under current standards, but which would also be used to develop and implement future energy conservation standards for metal halide lamp ballasts. DOE has determined that this final rule falls into a class of actions that are categorically excluded from review under the National Environmental Policy Act of 1969 (Pub. L. 91–190, codified at 42 U.S.C. 4321 *et seq.*), and DOE's implementing regulations at 10 CFR part 1021. Specifically, this final rule would adopt existing industry ballast test procedures, so it would not affect the amount, quality, or distribution of energy usage, and, therefore would not result in any significant effect on the human environment. Thus, this rulemaking is covered by Categorical Exclusion A6 under 10 CFR part 1021, subpart D.[7] Accordingly, neither an environmental assessment nor an environmental impact statement is required.

*E. Review Under Executive Order 13132*

Executive Order 13132, "Federalism," 64 FR 43255 (August 10, 1999), imposes certain requirements on agencies formulating and implementing policies or regulations that preempt State law or that have Federalism implications. The Executive Order requires agencies to examine the constitutional and statutory authority supporting any action that would limit the policymaking discretion of the states and to assess carefully the necessity for such actions. The Executive Order also requires agencies to have an accountable process to ensure meaningful and timely input by State and local officials in developing regulatory policies that have Federalism implications. On March 14, 2000, DOE published a statement of policy describing the intergovernmental consultation process that it will follow in developing such regulations. 65 FR 13735. DOE examined this final rule and determined that it would not have a substantial direct effect on the states, on the relationship between the national government and the states, or on the distribution of power and responsibilities among the various levels of government. Accordingly, Executive Order 13132 requires no further action.

*F. Review Under Executive Order 12988*

With respect to the review of existing regulations and the promulgation of new regulations, section 3(a) of Executive Order 12988, "Civil Justice Reform," 61 FR 4729 (Feb. 7, 1996), imposes on Federal agencies the duty to: (1) Eliminate drafting errors and ambiguity; (2) write regulations to minimize litigation; (3) provide a clear legal standard for affected conduct rather than a general standard; and (4) promote simplification and burden reduction. Section 3(b) of Executive Order 12988 specifically requires that Executive agencies make every reasonable effort to ensure that the regulation specifies the following: (1) The preemptive effect, if any; (2) any effect on existing Federal law or regulation; (3) a clear legal standard for affected conduct while promoting simplification and burden reduction; (4) the retroactive effect, if any; (5) definitions of key terms; and (6) other important issues affecting clarity and general draftsmanship under any guidelines issued by the Attorney General. Section 3(c) of Executive Order 12988 requires Executive agencies to review regulations in light of applicable standards in sections 3(a) and 3(b) to determine whether they are met or whether it is unreasonable to meet one or more of them. DOE completed the required review and determined that, to the extent permitted by law, this final rule meets the relevant standards of Executive Order 12988.

*G. Review Under the Unfunded Mandates Reform Act of 1995*

Title II of the Unfunded Mandates Reform Act of 1995 (UMRA) (Pub. L. 104–4, codified at 2 U.S.C. 1501 *et seq.*) requires each Federal agency to assess the effects of Federal regulatory actions on State, local, and Tribal governments

[7] Categorical Exclusion A6 provides, "Rulemakings that are strictly procedural, such as rulemaking (under 48 CFR part 9) establishing procedures for technical and pricing proposals and establishing contract clauses and contracting practices for the purchase of goods and services, and rulemaking (under 10 CFR part 600) establishing application and review procedures for, and administration, audit, and closeout of, grants and cooperative agreements."

and the private sector. For regulatory actions likely to result in a rule that may cause expenditures by State, local, and Tribal governments, in the aggregate, or by the private sector of $100 million or more in any 1 year (adjusted annually for inflation), section 202 of UMRA requires a Federal agency to publish a written statement that estimates the resulting costs, benefits, and other effects on the national economy. (2 U.S.C. 1532(a) and (b)) UMRA requires a Federal agency to develop an effective process to permit timely input by elected officers of State, local, and Tribal governments on a proposed "significant intergovernmental mandate." UMRA also requires an agency plan for giving notice and opportunity for timely input to small governments that may be potentially affected before establishing any requirement that might significantly or uniquely affect them. On March 18, 1997, DOE published a statement of policy on its process for intergovernmental consultation under UMRA. 62 FR 12820. (This policy is also available at *http://www.gc.doe.gov*). Today's final rule contains neither an intergovernmental mandate nor a mandate that may result in the expenditure of $100 million or more in any year, so these requirements do not apply.

*H. Review Under the Treasury and General Government Appropriations Act, 1999*

Section 654 of the Treasury and General Government Appropriations Act, 1999 (Pub. L. 105–277) requires Federal agencies to issue a Family Policymaking Assessment for any rule that may affect family well-being. Today's final rule to amend DOE test procedures would not have any negative consequence on the autonomy or integrity of the family as an institution. Accordingly, DOE has concluded that it is not necessary to prepare a Family Policymaking Assessment.

*I. Review Under Executive Order 12630*

Pursuant to Executive Order 12630, "Governmental Actions and Interference with Constitutionally Protected Property Rights," 53 FR 8859 (March 15, 1988), DOE determined that this final rule would not result in any takings that might require compensation under the Fifth Amendment to the U.S. Constitution.

*J. Review Under the Treasury and General Government Appropriations Act, 2001*

Section 515 of the Treasury and General Government Appropriations Act, 2001 (Pub. L. 106–554, codified at 44 U.S.C. 3516 note) provides for agencies to review most disseminations of information to the public under information quality guidelines established by each agency pursuant to general OMB guidelines. OMB's guidelines were published at 67 FR 8452 (Feb. 22, 2002), and DOE's guidelines were published at 67 FR 62446 (Oct. 7, 2002). DOE has reviewed today's final rule under the OMB and DOE guidelines and concluded that it is consistent with applicable policies in those guidelines.

*K. Review Under Executive Order 13211*

Executive Order 13211, "Actions Concerning Regulations That Significantly Affect Energy Supply, Distribution, or Use," 66 FR 28355 (May 22, 2001), requires Federal agencies to prepare and submit to OMB a Statement of Energy Effects for any proposed significant energy action. A "significant energy action" is defined as any action by an agency that promulgated a final rule or is expected to lead to promulgation of a final rule, and that: (1) Is a significant regulatory action under Executive Order 12866, or any successor order; and (2) is likely to have a significant adverse effect on the supply, distribution, or use of energy; or (3) is designated by the Administrator of OIRA as a significant energy action. For any proposed significant energy action, the agency must give a detailed statement of any adverse effects on energy supply, distribution, or use if the proposal is implemented, and of reasonable alternatives to the action and their expected benefits on energy supply, distribution, and use. Today's final rule is not a significant regulatory action under Executive Order 12866. Moreover, it would not have a significant adverse effect on the supply, distribution, or use of energy and has not been designated a significant energy action by the Administrator of OIRA. Therefore, DOE determined that this rule is not a significant energy action. Accordingly, DOE has not prepared a Statement of Energy Effects for this rulemaking.

*L. Review Under Section 32 of the Federal Energy Administration Act of 1974*

Under section 301 of the Department of Energy Organization Act (Pub. L. 95–91; 42 U.S.C. 7101, *et seq.*), DOE must comply with section 32 of the Federal Energy Administration Act of 1974 (Pub. L. 93–275), as amended by the Federal Energy Administration Authorization Act of 1977 (Pub. L. 95–70). (15 U.S.C. 788) Section 32 provides that, where a proposed rule authorizes or requires use of commercial standards, the NOPR must inform the public of the use and background of such standards. In addition, section 32(c) requires DOE to consult with the Attorney General and the Federal Trade Commission (FTC) about the effect of the commercial or industry standards on competition.

Today's final rule incorporates testing methods contained in the following commercial standards: ANSI C82.6–2005, "American National Standard for Lamp Ballasts—Ballasts for High-Intensity Discharge Lamps—Methods of Measurement, 2005." DOE has evaluated these revised standards and is unable to conclude whether they fully comply with the requirements of section 32(b) of the Federal Energy Administration Act (*i.e.,* that they were developed in a manner that fully provides for public participation, comment, and review). DOE has consulted with the Attorney General and the Chairman of the FTC concerning the affect on competition of requiring manufacturers to use the test methods contained in these standards, and neither recommended against incorporation of these standards.

*M. Congressional Notification*

As required by 5 U.S.C. 801, DOE will report to Congress on the promulgation of today's rule before its effective date. The report will state that it has been determined that the rule is not a "major rule" as defined by 5 U.S.C. 801(2).

## V. Approval of the Office of the Secretary

The Secretary of Energy has approved publication of this final rule.

## List of Subjects in 10 CFR Part 431

Administrative practice and procedure, Confidential business information, Energy conservation, Incorporation by reference, Reporting and recordkeeping requirements.

Issued in Washington, DC, on February 19, 2010.

**Cathy Zoi,**

*Assistant Secretary, Energy Efficiency and Renewable Energy.*

■ For the reasons stated in the preamble, DOE amends part 431 of chapter II of title 10, of the Code of Federal Regulations, to read as set forth below.

## PART 431—ENERGY EFFICIENCY PROGRAM FOR CERTAIN COMMERCIAL AND INDUSTRIAL EQUIPMENT

■ 1. The authority citation for part 431 continues to read as follows:

**Authority:** 42 U.S.C. 6291–6317.

■ 2. Section 431.321 is revised to read as follows:

## Subpart S—Metal Halide Lamp Ballasts and Fixtures

### § 431.321 Purpose and scope.

This subpart contains energy conservation requirements for metal halide lamp ballasts and fixtures, pursuant to Part A of Title III of the Energy Policy and Conservation Act, as amended, 42 U.S.C. 6291–6309.

■ 3. Section 431.322 is amended by:
■ a. Removing from paragraph 5 of the definition of "Ballast Efficiency" "2 kHz" and adding "2.4 kHz" in its place, and
■ b. Adding, in alphabetical order, definitions for "AC control signal," "Active mode," "Ballast," "Basic model," "DC control signal," "Electronic ballast," "Off mode," "PLC control signal," "Standby mode," and "Wireless control signal" to read as follows:

### § 431.322 Definitions concerning metal halide lamp ballasts and fixtures.

*AC control signal* means an alternating current (AC) signal that is supplied to the ballast using additional wiring for the purpose of controlling the ballast and putting the ballast in standby mode.

*Active mode* means the condition in which an energy-using product:

(1) Is connected to a main power source;

(2) Has been activated; and

(3) Provides one or more main functions.

*Ballast* means a device used with an electric discharge lamp to obtain necessary circuit conditions (voltage, current, and waveform) for starting and operating.

* * * * *

*Basic model* means, with respect to metal halide lamp ballasts, all units of a given type of metal halide lamp ballast (or class thereof) that:

(1) Are rated to operate a given lamp type and wattage;

(2) Have essentially identical electrical characteristics; and

(3) Have no differing electrical, physical, or functional characteristics that affect energy consumption.

*DC control signal* means a direct current (DC) signal that is supplied to the ballast using additional wiring for the purpose of controlling the ballast and putting the ballast in standby mode.

*Electronic ballast* means a device that uses semiconductors as the primary means to control lamp starting and operation.

* * * * *

*Off mode* means the condition in which an energy-using product:

(1) Is connected to a main power source; and

(2) Is not providing any standby or active mode function.

*PLC control signal* means a power line carrier (PLC) signal that is supplied to the ballast using the input ballast wiring for the purpose of controlling the ballast and putting the ballast in standby mode.

* * * * *

*Standby mode* means the condition in which an energy-using product:

(1) Is connected to a main power source; and

(2) Offers one or more of the following user-oriented or protective functions:

(i) To facilitate the activation or deactivation of other functions (including active mode) by remote switch (including remote control), internal sensor, or timer;

(ii) Continuous functions, including information or status displays (including clocks) or sensor-based functions.

*Wireless control signal* means a wireless signal that is radiated to and received by the ballast for the purpose of controlling the ballast and putting the ballast in standby mode.

### § 431.323 [Amended]

■ 4. Section 431.323 is amended by adding to the end of paragraph (b)(2) "and § 431.324".

■ 5. Section 431.324 is amended by revising the section heading, revising paragraph (b), and adding paragraph (c) to read as follows:

### § 431.324 Uniform test method for the measurement of energy efficiency and standby mode energy consumption of metal halide lamp ballasts.

* * * * *

(b) *Testing and Calculations Active Mode.* (1)(i) *Test Conditions.* The power supply, ballast test conditions, lamp position, lamp stabilization, and test instrumentation shall all conform to the requirements specified in section 4.0, "General Conditions for Electrical Performance Tests," of ANSI C82.6 (incorporated by reference; see § 431.323). Ambient temperatures for the testing period shall be maintained at 25 °C ± 5 °C. Airflow in the room for the testing period shall be ≤0.5 meters/second. The ballast shall be operated until equilibrium. Lamps used in the test shall conform to the general requirements in section 4.4.1 of ANSI C82.6 and be seasoned for a minimum of 100 hour prior to use in ballast tests. Basic lamp stabilization shall conform to the general requirements in section 4.4.2 of ANSI C82.6, and stabilization shall be reached when the lamp's electrical characteristics vary by no more than 3-percent in three consecutive 10- to 15-minute intervals measured after the minimum burning time of 30 minutes. After the stabilization process has begun, the lamp shall not be moved or repositioned until after the testing is complete. In order to avoid heating up the test ballast during lamp stabilization, which could cause resistance changes and result in unrepeatable data, it is necessary to warm up the lamp on a standby ballast. This standby ballast should be a commercial ballast of a type similar to the test ballast in order to be able to switch a stabilized lamp to the test ballast without extinguishing the lamp. Fast-acting or make-before-break switches are recommended to prevent the lamps from extinguishing during switchover.

(ii) Alternative Stabilization Method. In cases where switching without extinguishing the lamp is impossible or for low-frequency electronic ballasts, the following alternative stabilization method shall be used. The lamp characteristics are determined using a reference ballast and recorded for future comparison. The same lamp is to be driven by the ballast under test until the ballast reaches operational stability. Operational stability is defined by three consecutive measurements, 5 minutes apart, of the lamp power where the three readings are within 2.5 percent. The electrical measurements are to be taken within 5 minutes after conclusion of the stabilization period.

(2) *Test Measurement.* The ballast input power and lamp output power during operating conditions shall be measured in accordance with the methods specified in section 6.0, "Ballast Measurements (Multiple-Supply Type Ballasts)" of the ANSI C82.6 (incorporated by reference; *see* § 431.323).

(3) *Efficiency Calculation.* The measured lamp output power shall be divided by the ballast input power to determine the percent efficiency of the ballast under test.

(c) *Testing and Calculations-Standby Mode.* The measurement of standby mode need not be performed to determine compliance with energy conservation standards for metal halide lamp fixtures at this time. The above statement will be removed as part of the rulemaking to amend the energy conservation standards for metal halide lamp fixtures to account for standby mode energy consumption, and the following shall apply on the compliance date for such requirements. However, all representations related to standby mode energy consumption of these products made after September 7, 2010, must be

based upon results generated under this test procedure.

(1) *Test Conditions.* The power supply, ballast test conditions, and test instrumentation shall all conform to the requirements specified in section 4.0, "General Conditions for Electrical Performance Tests," of the ANSI C82.6 (incorporated by reference; see § 431.323) Ambient temperatures for the testing period shall be maintained at 25 °C ± 5 °C. Send a signal to the ballast instructing it to have zero light output using the appropriate ballast communication protocol or system for the ballast being tested.

(2) *Measurement of Main Input Power.* Measure the input power (watts) to the ballast in accordance with the methods specified in section 6.0, "Ballast Measurements (Multiple-Supply Type Ballasts)" of the ANSI C82.6 (incorporated by reference; see § 431.323).

(3) *Measurement of Control Signal Power.* The power from the control signal path is measured using all applicable methods described below:

(i) *DC Control Signal.* Measure the DC control signal voltage, using a voltmeter (V), and current, using an ammeter (A) connected to the ballast in accordance with the circuit shown in Figure 1. The DC control signal power is calculated by multiplying the DC control signal voltage by the DC control signal current.

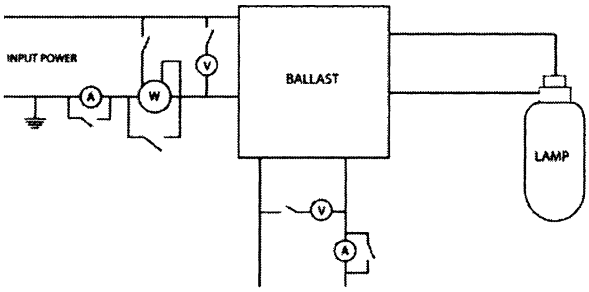


**Figure 1. Circuit for Measuring DC Control Signal Power in Standby Mode**

(ii) *AC Control Signal.* Measure the AC control signal power (watts), using a wattmeter capable of indicating true RMS power in watts (W), connected to the ballast in accordance with the circuit shown in Figure 2.

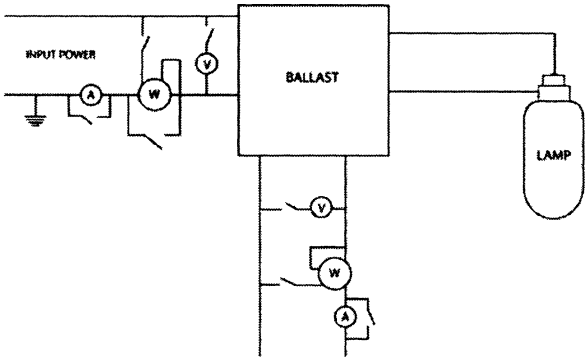


**Figure 2. Circuit for Measuring AC Control Signal Power in Standby Mode**

(iii) *Power Line Carrier (PLC) Control Signal.* Measure the PLC control signal power (watts), using a wattmeter capable of indicating true RMS power in watts (W) connected to the ballast in accordance with the circuit shown in Figure 3. The wattmeter must have a frequency response that is at least 10 times higher than the PLC being measured to measure the PLC signal correctly. The wattmeter must also be high-pass filtered to filter out power at 60 Hz.

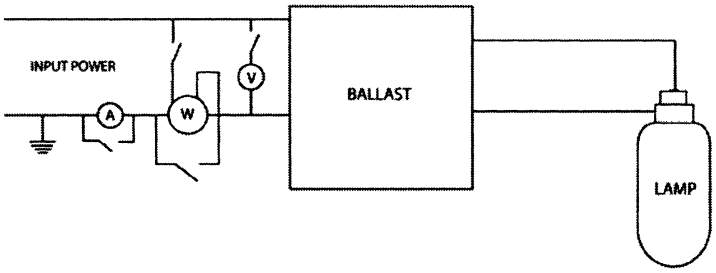


**Figure 3. Circuit for Measuring PLC Control Signal Power in Standby Mode**

■ 6. Section 431.325 is added to subpart S to read as follows:

**§ 431.325 Units to be tested.**

For each basic model of metal halide lamp ballast selected for testing, a sample of sufficient size, no less than four, shall be selected at random and tested to ensure that:

(a) Any represented value of estimated energy efficiency calculated as the measured output power to the lamp divided by the measured input power to the ballast ($P_{out}/P_{in}$), of a basic model is no less than the higher of:

(1) The mean of the sample, or

(2) The upper 99-percent confidence limit of the true mean divided by 1.01.

(b) Any represented value of the energy efficiency of a basic model is no greater than the lower of:

(1) The mean of the sample, or

(2) The lower 99-percent confidence limit of the true mean divided by 0.99.

■ 7. Sections 431.327, 431.328, 431.329 and Appendices A, B, and C are added to Subpart S to read as follows:

**§ 431.327 Submission of data.**

(a) *Certification.* (1) Except as provided in paragraph (a)(2) of this section, each manufacturer or private labeler, before distributing in commerce any basic model of equipment covered by this subpart and subject to an energy conservation standard set forth in this part, shall certify by means of a compliance statement and a certification report that each basic model meets the applicable energy conservation standard.

(2) Each manufacturer or private labeler of a basic model of metal halide lamp ballast shall file a compliance statement and its first certification report with DOE on or before March 9, 2011.

(3) *Amendment of information.* If information in a compliance statement or certification report previously submitted to the Department under this section is found to be incorrect, each manufacturer or private labeler (or an authorized representative) must submit the corrected information to the Department at the address and in the manner described in this section.

(4) *Third-party representatives.* Each manufacturer or private labeler shall notify the Department when designating a third-party representative and shall notify the Department of any changes of third-party representatives which is to be sent to the Department at the address and in the manner described in this section.

(5) *Compliance statement.* Each manufacturer or private labeler need submit its compliance statement once. Such statement shall include all required information specified in the format set forth in Appendix A of this subpart and shall certify, with respect to each basic model currently produced by the manufacturer and all new basic models it introduces in the future, that:

(i) Each basic model complies and will comply with the applicable energy conservation standard;

(ii) All representations as to efficiency in the manufacturer's certification report(s) are and will be based on testing conducted in accordance with the applicable test requirements prescribed in this subpart;

(iii) All information reported in the certification report(s) is and will be true, accurate, and complete; and

(iv) The manufacturer or private labeler is aware of the penalties associated with violations of the Act, the regulations thereunder, and 18 U.S.C. 1001, which prohibits knowingly making false statements to the Federal Government.

(6) *Certification report.* Each manufacturer must submit to DOE a certification report for each of its metal halide lamp ballast basic models. The certification report (for which a suggested format is set forth in Appendix B of this subpart) shall include for each basic model the product type, product class, manufacturer's name, private labeler's name(s) (if applicable), the manufacturer's model number(s), and the ballast efficiency in percent. A single certification report may be used to report required information for multiple basic models.

(7) Copies of reports to the Federal Trade Commission that include the information specified in paragraph (a)(6) of this section could serve in lieu of the certification report.

(b) *Model modifications.* Any change to a basic model that affects energy consumption constitutes the addition of a new basic model. If such a change reduces energy consumption, the new model shall be considered in compliance with the standard without any additional testing. If, however, such a change increases energy consumption while meeting the standard, then the manufacturer must submit all information required by paragraph (a)(6) of this section for the new basic model.

(c) *Discontinued models.* A manufacturer shall report to the Department a basic model whose production has ceased and is no longer being distributed. For each basic model, the report shall include: equipment type, equipment class, the manufacturer's name, the private labeler's name(s) (if applicable), and the manufacturer's model number. If the reporting of discontinued models coincides with the submittal of a certification report, such information can be included in the certification report.

(d) *Third-party representation.* A manufacturer or private labeler may elect to use a third party (such as a trade association or other authorized representative) to submit the certification report to DOE. Such certification reports shall include all the information specified in paragraph (a)(6) of this section. Third parties submitting certification reports shall include the names of the manufacturers or private labelers who authorized the submittal of the certification reports to DOE on their behalf. The third-party representative also may submit model modification information, as specified in paragraph (b) of this section, and discontinued model information, as specified in paragraph (c) of this section, on behalf

of an authorizing manufacturer or private labeler.

(e) *Submission instructions.* All reports and notices required by this section shall be sent by certified mail to: U.S. Department of Energy, Building Technologies Program, Mailstop EE–2J, 1000 Independence Avenue, SW., Washington, DC 20585–0121, or by e-mail to the Department at: *certification.report@ee.doe.gov.* If submitting by e-mail, the compliance statement must be provided in PDF format (which shows the original signature).

**§ 431.328 Sampling.**

For purposes of a certification of compliance, the determination that a basic model complies with the applicable energy conservation standard shall be based upon the testing and sampling procedures, and other applicable rating procedures, set forth in this part. For purposes of a certification of compliance, the determination that a basic model complies with the applicable design standard shall be based on the incorporation of specific design requirements specified in this part.

**§ 431.329 Enforcement.**

*Process for Metal Halide Lamp Ballasts.* This section sets forth procedures DOE will follow in pursuing alleged noncompliance with an applicable energy conservation standard.

(a) *Performance standards.* (1) *Test notice.* Upon receiving information in writing concerning the energy performance of a particular covered equipment sold by a particular manufacturer or private labeler which indicates that the covered equipment may not be in compliance with the applicable energy standard, the Secretary may conduct a review of the test records. The Secretary may then conduct enforcement testing of that equipment under the DOE test procedure, a process that is initiated by means of a test notice addressed to the manufacturer or private labeler in accordance with the requirements outlined below.

(i) The test notice procedure will only be followed after the Secretary or his/her designated representative has examined the underlying test data provided by the manufacturer, and after the manufacturer has been offered the opportunity to meet with the Department to verify compliance with the applicable energy conservation standard and/or water conservation standard. A representative designated by the Secretary must be permitted to observe any re-verification procedures undertaken according to this subpart, and to inspect the results of such re-verification.

(ii) The test notice will be signed by the Secretary or his/her designee and will be mailed or delivered by the Department to the plant manager or other responsible official designated by the manufacturer.

(iii) The test notice will specify the basic model to be selected for testing, the number of units to be tested, the method for selecting these units, the date and time at which testing is to begin, the date when testing is scheduled to be completed, and the facility at which testing will be conducted. The test notice may also provide for situations in which the selected basic model is unavailable for testing, and it may include alternative basic models.

(iv) The Secretary may require in the test notice that the manufacturer of covered equipment shall ship at its expense a reasonable number of units of each basic model specified in the test notice to a testing laboratory designated by the Secretary. The number of units of a basic model specified in a test notice shall not exceed 20.

(v) Within five working days of the time the units are selected, the manufacturer must ship the specified test units of a basic model to the designated testing laboratory.

(2) *Testing Laboratory.* Whenever the Department conducts enforcement testing at a designated laboratory in accordance with a test notice under this section, the resulting test data shall constitute official test data for that basic model. The Department will use such test data to make a determination of compliance or noncompliance.

(3) *Sampling.* The Secretary will base the determination of whether a manufacturer's basic model complies with the applicable energy conservation standard on testing conducted in accordance with the applicable test procedures specified in this part, and with the following statistical sampling procedures for metal halide lamp ballasts, with the methods described in 10 CFR Part 431, Subpart S, Appendix C (Sampling Plan for Enforcement Testing).

(4) *Test unit selection.* For metal halide lamp ballasts, the following applies:

(i) The Department shall select a batch, a batch sample, and test units from the batch sample in accordance with the following provisions of this paragraph and the conditions specified in the test notice.

(ii) The batch may be subdivided by the Department using criteria specified in the test notice.

(iii) The Department will then randomly select a batch sample of up to 20 units from one or more subdivided groups within the batch. The manufacturer shall keep on hand all units in the batch sample until the basic model is determined to be in compliance or non-compliance.

(iv) The Department will randomly select individual test units comprising the test sample from the batch sample.

(v) All random selections shall be achieved by sequentially numbering all the units in a batch sample and then using a table of random numbers to select the units to be tested.

(5) *Test unit preparation.* (i) Before and during the testing, a test unit selected in accordance with paragraph (a)(4) of this section shall not be prepared, modified, or adjusted in any manner unless such preparation, modification, or adjustment is allowed by the applicable DOE test procedure. DOE will test each unit in accordance with the applicable test procedures.

(ii) No one may perform any quality control, testing, or assembly procedures on a test unit, or any parts and subassemblies thereof, that is not performed during the production and assembly of all other units included in the basic model.

(iii) A test unit shall be considered defective if it is inoperative. A test unit is also defective if it is found to be in noncompliance due to a manufacturing defect or due to failure of the unit to operate according to the manufacturer's design and operating instructions, and the manufacturer demonstrates by statistically valid means that, with respect to such defect or failure, the unit is not representative of the population of production units from which it is obtained. Defective units, including those damaged due to shipping or handling, must be reported immediately to DOE. The Department may authorize testing of an additional unit on a case-by-case basis.

(6) *Testing at manufacturer's option.* (i) If the Department determines a basic model to be in noncompliance with the applicable energy performance standard at the conclusion of its initial enforcement sampling plan testing, the manufacturer may request that the Department conduct additional testing of the basic model. Additional testing under this paragraph must be in accordance with the applicable test procedure, and for metal halide lamp ballasts, the applicable provisions in Appendix C to Subpart S to Part 431.

(ii) All units tested under this paragraph shall be selected and tested in accordance with paragraphs (a)(1)(v) and (a)(2) through (5) of this section.

(iii) The manufacturer shall bear the cost of all testing conducted under this paragraph.

(iv) The Department will advise the manufacturer of the method for selecting the additional units for testing under the sampling plan, the date and time at which testing is scheduled to begin, the date by which testing is scheduled to be completed, and the facility at which the testing will occur.

(v) The manufacturer shall cease distribution of the basic model tested under the provisions of this paragraph from the time the manufacturer elects to exercise the option provided in this paragraph until the basic model is determined to be in compliance. The Department may seek civil penalties for all units distributed during such period.

(vi) If the additional testing results in a determination of compliance, the Department will issue a notice of allowance to resume distribution.

(b) *Cessation of distribution of a basic model of commercial equipment other than electric motors.* (1) In the event the Department determines, in accordance with enforcement provisions set forth in this subpart, that a model of covered equipment is noncompliant, or if a manufacturer or private labeler determines one of its models to be in noncompliance, the manufacturer or private labeler shall:

(i) Immediately cease distribution in commerce of all units of the basic model in question;

(ii) Give immediate written notification of the determination of noncompliance to all persons to whom the manufacturer has distributed units of the basic model manufactured since the date of the last determination of compliance; and

(iii) If requested by the Secretary, provide DOE, within 30 days of the request, records, reports and other documentation pertaining to the acquisition, ordering, storage, shipment, or sale of a basic model determined to be in noncompliance.

(2) The manufacturer may modify the noncompliant basic model in such manner as to make it comply with the applicable performance standard. The manufacturer or private labeler must treat such a modified basic model as a new basic model and certify it in accordance with the provisions of this subpart. In addition to satisfying all requirements of this subpart, the manufacturer must also maintain records that demonstrate that modifications have been made to all units of the new basic model before its distribution in commerce.

(3) If a manufacturer or private labeler has a basic model that is not properly certified in accordance with the requirements of this subpart, the Secretary may seek, among other remedies, injunctive action to prohibit distribution in commerce of the basic model.

## Appendix A to Subpart S of Part 431—Compliance Statement for Metal Halide Lamp Ballasts

Equipment: Metal Halide Lamp Ballasts

Manufacturer's or Private Labeler's Name and Address:

_____

_____

[Company name] ("the company") submits this Compliance Statement under 10 CFR Part 431 (Energy Efficiency Program for Certain Commercial and Industrial Equipment) and Part A of the Energy Policy and Conservation Act (Pub. L. 94–163), and amendments thereto. I am signing this on behalf of and as a responsible official of the company. All basic models of metal halide lamp ballasts subject to energy conservation standards specified in 10 CFR Part 431 that this company manufactures comply with the applicable energy conservation standard(s). We have complied with the applicable testing requirements (prescribed in 10 CFR Part 431) in making this determination, and in determining the energy efficiency set forth in all Certification Reports submitted by or on behalf of this company. All information in such Certification Report(s) and in this Compliance Statement is true, accurate, and complete. The company pledges that all this information in any future Compliance Statement(s) and Certification Report(s) will meet these standards, and that the company will comply with the energy conservation requirements in 10 CFR Part 431 with regard to any new basic model it distributes in the future. The company is aware of the penalties associated with violations of the Act and the regulations thereunder, and is also aware of the provisions contained in 18 U.S.C. 1001, which prohibits knowingly making false statements to the Federal Government.

Name of Company Official: _____
Signature of Company Official: _____
Title: _____
Firm or Organization: _____
Date: _____

Name of Person to Contact for Further Information:

Address: _____
Telephone Number: _____
Facsimile Number: _____
Email: _____

Third-Party Representation (if applicable)

For certification reports prepared and submitted by a third-party organization under the provisions of 10 CFR Part 431, the company official who authorized said third-party representation is:

Name: _____
Title: _____
Address: _____
Telephone Number: _____
Facsimile Number: _____
Email: _____

The third-party organization authorized to act as representative:

Third-Party Organization: _____
Address: _____
Telephone Number: _____
Facsimile Number: _____
Email: _____

Submit by Certified Mail to: U.S. Department of Energy, Building Technologies Program, Mailstop EE–2J, 1000 Independence Avenue, SW, Washington, DC 20585–0121. Submit by e-mail in PDF format (which shows original signature) to the U.S. Department of Energy, Buildings Technologies Program at: *certification.report.@ee.doe.gov.*

## Appendix B to Subpart S to Part 431—Certification Report for Metal Halide Lamp Ballasts

All information reported in this Certification Report(s) is true, accurate, and complete. The company is aware of the penalties associated with violations of the Act, the regulations thereunder, and is also aware of the provisions contained in 18 U.S.C. 1001, which prohibits knowingly making false statements to the Federal Government.

Name of Company Official or Third-Party Representative:

_____

Signature of Company Official or Third-Party Representative:

_____

Title: _____
Date: _____
Equipment Type: _____
Manufacturer: _____

Name of Person to Contact for Further Information:

_____

Address: _____
Telephone Number: _____
Facsimile Number: _____
E-mail: _____

For Existing, New, or Modified Models: [Provide specific equipment information including, for each basic model, the product class, the manufacturer's model number(s), and the other information required in 431.327(a)(6)(i).]

For Discontinued Models: [Provide manufacturer's model number(s).]

Submit by Certified Mail to: U.S. Department of Energy, Building Technologies Program, Mailstop EE–2J, 1000 Independence Avenue, SW., Washington, DC 20585–0121. Submit by E-mail to: U.S. Department of Energy, Buildings Technologies Program, *certification.report@ee.doe.gov.*

## Appendix C to Subpart S of Part 431—Enforcement for Performance Standards; Compliance Determination Procedure for Metal Halide Lamp Ballasts

DOE will determine compliance as follows:

(a) After it has determined the sample size, DOE will measure the energy performance for each unit in accordance with the following table:

| Sample size | Number of tests for each unit |
|---|---|
| 4 | 1 |
| 3 | 1 |
| 2 | 2 |
| 1 | 4 |

(b) Compute the mean of the measured energy performance ($x_1$) for all tests as follows:

$$x_1 = \frac{1}{n_1}\left\{\sum_{i=1}^{n_1} x_i\right\} \qquad [1]$$

Where $x_i$ is the measured energy efficiency or consumption from test i, and $n_1$ is the total number of tests.

(c) Compute the standard deviation ($S_1$) of the measured energy performance from the $n_1$ tests as follows:

$$S_1 = \sqrt{\frac{\sum_{i=1}^{n_1}(x_i - x_1)^2}{n_1 - 1}} \qquad [2]$$

(d) Compute the standard error ($Sx_1$) of the measured energy performance from the $n_1$ tests as follows:

$$S_{x_1} = \frac{S_1}{\sqrt{n_1}} \qquad [3]$$

(e)(1) For an energy efficiency standard, compute the lower control limit ($LCL_1$) according to:

$$LCL_1 = EPS - ts_{x_1} \qquad [4a]$$

or

$$LCL_1 = 97.5\ EPS \qquad [4b]$$

(whichever is greater)

(2) For an energy use standard, compute the upper control limit ($UCL_1$) according to:

$$UCL_1 = EPS + ts_{x_1} \qquad [5a]$$

or
(whichever is less)

$$UCL_1 = 1.025\ EPS \qquad [5b]$$

Where EPS is the energy performance standard and t is a statistic based on a 99-percent, one-sided confidence limit and a sample size of $n_1$.

(f)(1) Compare the sample mean to the control limit. The basic model is in compliance and testing is at an end if, for an energy efficiency standard, the sample mean is equal to or greater than the lower control limit or, for an energy consumption standard, the sample mean is equal to or less than the upper control limit. If, for an energy efficiency standard, the sample mean is less than the lower control limit or, for an energy consumption standard, the sample mean is greater than the upper control limit, compliance has not been demonstrated. Unless the manufacturer requests manufacturer-option testing and provides the additional units for such testing, the basic model is in noncompliance, and the testing is at an end.

(2) If the manufacturer does request additional testing and provides the necessary additional units, DOE will test each unit the same number of times it tested previous units. DOE will then compute a combined sample mean, standard deviation, and standard error as described above. (The "combined sample" refers to the units DOE initially tested plus the additional units DOE has tested at the manufacturer's request.) DOE will determine compliance or noncompliance from the mean and the new lower or upper control limit of the combined sample. If, for an energy efficiency standard, the combined sample mean is equal to or greater than the new lower control limit or, for an energy consumption standard, the sample mean is equal to or less than the upper control limit, the basic model is in compliance and testing is at an end. If the combined sample mean does not satisfy one of these two conditions, the basic model is not in compliance.

[FR Doc. 2010–3841 Filed 3–8–10; 8:45 am]

BILLING CODE 6450–01–P

## DEPARTMENT OF ENERGY

**[Docket No. EERE–2008–BT–TP–0017]**

**RIN 1904–AB87**

## Proposed Information Collection; Comment Request; Certification, Compliance, and Enforcement Requirements for Consumer Products and Certain Commercial and Industrial Equipment

**AGENCY:** Office of Energy Efficiency and Renewable Energy, Department of Energy.

**ACTION:** Notice.

**SUMMARY:** The U.S. Department of Energy (DOE), as part of its continuing effort to reduce paperwork and respondent burden, invites the general public and other Federal agencies to take this opportunity to comment on the proposed information collection described in this notice, as required by the Paperwork Reduction Act of 1995.

**DATES:** Written comments must be submitted on or before May 10, 2010.

**ADDRESSES:** Direct all written comments to Ever Crutchfield or Christina Rouleau, Information Management (IM–23), U.S. Department of Energy, Room 4002/4003, 19901 Germantown Rd., Germantown, MD 20874 (or via the Internet at *Ever.Crutchfield@hq.doe.gov* or *Christina.Rouleau@hq.doe.gov*).

**FOR FURTHER INFORMATION CONTACT:** Requests for additional information or copies of the information collection instrument and instructions should be directed to Linda Graves, (202) 586–1851 or *Linda.Graves@ee.doe.gov.*

**SUPPLEMENTARY INFORMATION:**

### I. Background

The Energy Policy and Conservation Act (EPCA) establishes energy and water conservation standards and test procedures for consumer products and certain commercial and industrial equipment, including metal halide ballasts. DOE is publishing regulations to amend the test procedure for metal halide ballasts and establish requirements for the submission of compliance statements and certification reports for these ballasts. These regulations appear elsewhere in today's **Federal Register**.

The information that would be required by these regulations, if finalized, and that is the subject of this proposed collection of information, would be submitted by manufacturers to certify compliance with energy efficiency standards established by DOE for metal halide lamp ballasts. DOE would also use the information to determine whether an enforcement action is warranted.

### II. Method of Collection

Respondents have a choice of either electronic or paper forms. Methods of submittal include e-mail of electronic forms, and mail and facsimile transmission of paper forms.

### III. Data

*OMB Control Number:* To be determined.

*Form Number:* None.

*Type of Review:* Regular submission.

*Affected Public:* Manufacturers of metal halide lamp ballasts.

*Estimated Number of Respondents:* 148.

*Estimated Time per Response:* Certification reports and compliance statements, 160 hours.

*Estimated Total Annual Burden Hours:* 23,680.00.

*Estimated Total Annual Cost to Public:* $1,776,000.00 in recordkeeping/reporting costs.

### IV. Request for Comments

Comments are invited on: (a) Whether the proposed collection of information is necessary for the proper performance of the functions of the agency, including whether the information shall have practical utility; (b) the accuracy of the agency's estimate of the burden (including hours and cost) of the proposed collection of information; (c) ways to enhance the quality, utility, and clarity of the information to be collected; and (d) ways to minimize the burden of the collection of information on respondents, including through the use of automated collection techniques or other forms of information technology.

Comments submitted in response to this notice will be summarized and/or included in the request for OMB approval of this information collection; they also will become a matter of public record.

Issued in Washington, DC on February 19, 2010.

**Cathy Zoi,**

*Assistant Secretary, Energy Efficiency and Renewable Energy.*

[FR Doc. 2010–3837 Filed 3–8–10; 8:45 am]

BILLING CODE 6450–01–P

Federal Register

Tuesday,
March 9, 2010

# Part IV

# Department of Transportation

## Pipeline and Hazardous Materials Safety Administration

## 49 CFR Part 172

## Hazardous Materials: Risk-Based Adjustment of Transportation Security Plan Requirements; Final Rule

**DEPARTMENT OF TRANSPORTATION**

**Pipeline and Hazardous Materials Safety Administration**

**49 CFR Part 172**

**[Docket No. PHMSA–06–25885 (HM–232F)]**

**RIN 2137–AE22**

## Hazardous Materials: Risk-Based Adjustment of Transportation Security Plan Requirements

**AGENCY:** Pipeline and Hazardous Materials Safety Administration (PHMSA).

**ACTION:** Final rule.

**SUMMARY:** PHMSA, in consultation with the Transportation Security Administration (TSA) of the Department of Homeland Security (DHS), is modifying current security plan requirements applicable to the commercial transportation of hazardous materials by air, rail, vessel, and highway. Based on an evaluation of the security threats associated with specific types and quantities of hazardous materials, the final rule narrows the list of materials subject to security plan requirements and reduces associated regulatory costs and paperwork burden. The final rule also clarifies certain requirements related to security planning, training, and documentation.

**DATES:** *Effective date:* This final rule is effective October 1, 2010.

*Voluntary compliance date:* Voluntary compliance with all the amendments in this final rule is authorized as of April 8, 2010.

**FOR FURTHER INFORMATION CONTACT:** Susan Gorsky or Ben Supko, Office of Hazardous Materials Standards, Pipeline and Hazardous Materials Safety Administration, 202–366–8553.

**SUPPLEMENTARY INFORMATION:**

### I. Background

*A. Current DOT Security Requirements*

The federal hazardous materials transportation law (federal hazmat law, 49 U.S.C. 5101 *et seq.*) authorizes the Secretary of Transportation to "prescribe regulations for the safe transportation, including security, of hazardous material in intrastate, interstate, and foreign commerce." The Secretary has delegated this authority to PHMSA. Authority to enforce the Hazardous Materials Regulations (HMR; 49 CFR Parts 171–180) has been delegated to the FAA "with particular emphasis on the transportation or shipment of hazardous materials by air"; the FRA "with particular emphasis on the transportation or shipment of hazardous materials by railroad"; PHMSA "with particular emphasis on the shipment of hazardous materials and the manufacture, fabrication, marking, maintenance, reconditioning, repair or test of multi-modal containers that are represented, marked, certified, or sold for use in the transportation of hazardous materials"; and the FMCSA "with particular emphasis on the transportation or shipment of hazardous materials by highway." 49 CFR Part 1, Subpart C. The United States Coast Guard (USCG) is authorized to enforce the HMR in connection with certain transportation or shipment of hazardous materials by water. This authority originated with the Secretary and was first delegated to USCG prior to 2003, when USCG was made part of the Department of Homeland Security. DHS Delegation No. 0170, Section 2(99) & 2(100); see also 6 U.S.C. 458(b), 551(d)(2). Thus, enforcement of the security plan and training regulations is shared among the DOT operating administrations and the USCG, with each placing particular emphasis on their respective authorities.

The HMR require persons who offer for transportation or transport certain hazardous materials in commerce to develop and implement security plans. The security plan requirements in Subpart I of Part 172 of the HMR apply to persons who offer for transportation or transport:

(1) A highway-route controlled quantity of a Class 7 (radioactive) material;

(2) More than 25 kg (55 lbs.) of a Division 1.1, 1.2, or 1.3 (explosive) material;

(3) More than 1 L (1.06 qt.) per package of a material poisonous by inhalation in Hazard Zone A;

(4) A shipment in a bulk packaging with a capacity equal to or greater than 13,248 L (3,500 gallons) for liquids or gases or greater than 13.24 cubic meters (468 cubic feet) for solids;

(5) A shipment in other than a bulk packaging of 2,268 kg (5,000 lbs.) gross weight or more of one class of hazardous materials for which placarding is required;

(6) A select agent or toxin regulated by the Centers for Disease Control and Prevention under 42 CFR Part 73 or a select agent or toxin regulated by the U.S. Department of Agriculture under 9 CFR Part 121; or

(7) A shipment that requires placarding under Subpart F of Part 172 of the HMR.

A security plan must include an assessment of possible transportation security risks and appropriate measures to address the assessed risks. Specific measures implemented as part of the plan may vary with the level of threat at a particular time. At a minimum, the security plan must address personnel security, unauthorized access, and en route security. For personnel security, the plan must include measures to confirm information provided by job applicants for positions involving access to and handling of the hazardous materials covered by the plan. For unauthorized access, the plan must include measures to address the risk of unauthorized persons gaining access to materials or transport conveyances being prepared for transportation. For en route security, the plan must include measures to address security risks during transportation, including the security of shipments stored temporarily en route to their destinations.

As indicated above, the HMR set forth general requirements for a security plan's components rather than a prescriptive list of specific items that must be included. The HMR set a performance standard providing offerors and carriers with the flexibility necessary to develop security plans addressing their individual circumstances and operational environments. Accordingly, each security plan will differ because it will be based on an offeror's or a carrier's individualized assessment of the security risks associated with the specific hazardous materials it ships or transports and its unique circumstances and operational environment.

*B. Notice of Proposed Rulemaking*

On September 9, 2008, PHMSA published a notice of proposed rulemaking (NPRM; 73 FR 52558) to propose modifications to the list of materials for which a security plan is required. The NPRM was based on comments received in response to an ANRPM issued under this docket (71 FR 55156) and in a public meeting we hosted on November 30, 2006, and an evaluation of possible security threats posed by specific types and classes of hazardous materials. In identifying materials to which a security plan should apply, we consulted with the Federal Railroad Administration, Federal Motor Carrier Safety Administration, and the Transportation Security Administration (TSA) in the Department of Homeland Security, to assess the transportation security risks associated with the different classes and quantities of hazardous materials. We evaluated specific transportation scenarios in which a terrorist could deliberately use hazardous materials to cause large-scale casualties and property

damage. In our qualitative risk evaluation, we considered the following factors: (1) Physical and chemical properties of the material or class of materials and how those properties could contribute to a security incident; (2) quantities shipped and mode of transport; (3) past terrorist use; (4) potential use; and (5) availability. One of the most significant security vulnerabilities involves the potential for an individual or group to take control of a conveyance containing a high-risk material and move it to a site where the material could cause maximum physical or psychological damage. For some hazardous materials, the primary security threat involves theft or highjacking of raw materials for use in developing explosive devices or weapons.

As we indicated in the NPRM, one of our goals for this rulemaking is to harmonize to the extent consistent with our security goals the list of materials for which security plans are required with the list of materials designated as high consequence dangerous goods for which enhanced security measures are recommended in the United Nations Model Regulations on the Transport of Dangerous Goods (UN Recommendations). The recommended security measures include security plans and are similar to the requirements in Subpart I of Part 172 of the HMR. The UN Recommendations define high consequence dangerous goods as materials with the "potential for mis-use in a terrorist incident and which may, as a result, produce serious consequences such as mass casualties or mass destruction." The UN Recommendations list the following materials as high consequence dangerous goods:

(1) Division 1.1 explosives;

(2) Division 1.2 explosives;

(3) Division 1.3 compatibility group C explosives;

(4) Division 1.5 explosives;

(5) Bulk shipments of Division 2.1 flammable gases;

(6) Division 2.3 toxic gases (excluding aerosols);

(7) Bulk shipments of Class 3 flammable liquids in Packing Group I or II;

(8) Class 3 and Division 4.1 desensitized explosives;

(9) Bulk shipments of Division 4.2 Packing Group I materials;

(10) Bulk shipments of Division 4.3 Packing Group I materials;

(11) Bulk shipments of Division 5.1 Packing Group I oxidizing liquids;

(12) Bulk shipments of Division 5.1 perchlorates, ammonium nitrate and ammonium nitrate fertilizers;

(13) Division 6.1 Packing Group I toxic materials;

(14) Division 6.2 infectious substances of Category A (UN2814 and 2900);

(15) Class 7 radioactive materials in quantities greater than 3000 $A_1$ (special form) or 3000 $A_2$, as applicable, in Type B(U) or Type B(M) or Type (C) packages; and

(16) Bulk shipments of Class 8 Packing Group I materials.

For purposes of the security provisions, the UN defines "in bulk" to mean quantities greater than 3,000 kg (6,614 lbs.) for solids and 3,000 liters (793 gallons) for liquids and gases in portable tanks or bulk containers.

In the NPRM, we proposed the following modifications to the list of materials subject to security plans:

NPRM LIST

| Class | Current threshold | Proposed threshold | Change |
|---|---|---|---|
| 1.1 | Any quantity | Any quantity | None. |
| 1.2 | Any quantity | Any quantity | None. |
| 1.3 | Any quantity | Any quantity | None. |
| 1.4 | A quantity requiring placarding | Any quantity of UN 0104, 0237, 0255, 0267, 0289, 0361, 0365, 0366, 0440, 0441, 0455, 0456, 0500. | Security plan required only for detonators and shaped charges. |
| 1.5 | A quantity requiring placarding | Any quantity | Security plan required for all shipments. |
| 1.6 | A quantity requiring placarding | Not subject | Security plan not required for any Division 1.6 shipments. |
| 2.1 | A quantity requiring placarding | >3,000 L in a single packaging | Security plan not required for 3,000 L (793 gallons) or less. |
| 2.2 | A quantity requiring placarding | Not subject except for oxygen and gases with a subsidiary 5.1 hazard (<3,000 L (793 gallons) in a single packaging). | Security plan not required for most non-flammable, non-poisonous compressed gas shipments. |
| 2.3 | Any quantity | Any quantity | None. |
| 3 | A quantity requiring placarding | >3,000 L (793 gallons) in a single packaging and any quantity of Class 3 desensitized explosives. | Security plan not required for 3,000 L (793 gallons) or less except for desensitized explosives. |
| 4.1 | A quantity requiring placarding | Any quantity desensitized explosives | Security plan not required except for desensitized explosives. |
| 4.2 | A quantity requiring placarding | PG I and II only in quantities >3,000 kg in a single packaging. | Security plan not required for PG III materials. |
| 4.3 | Any quantity | Any quantity | None. |
| 5.1 | A quantity requiring placarding | PG I and II liquids, perchlorates, ammonium nitrate (including fertilizers) in quantities >3,000 L (793 gallons) in a single packaging. | Security plan not required for PG III liquids or unlisted solids. |
| 5.2 | Any quantity of Organic peroxide, Type B, liquid or solid, temperature controlled. | Any quantity of Organic peroxide, Type B, liquid or solid, temperature controlled. | None. |
| 6.1 | A quantity requiring placarding; any quantity of PIH material. | Any quantity of PG I; >3,000 L (793 gallons) for PG II and III. | Security plan not required for 3,000 L (793 gallons) or less of PG II and III. |
| 6.2 | Select agents | Select agents | None. |

NPRM LIST—Continued

| Class | Current threshold | Proposed threshold | Change |
|---|---|---|---|
| 7 | Shipments requiring Yellow III label; highway route controlled quantity. | For radionuclides covered by the IAEA Code of Conduct, Category 1 and Category 2 sources per package; for all other radionuclides, 3000 A2 per package. | Security plan only required for Class 7 materials that pose transportation security risk. |
| 8 | A quantity requiring placarding | PG I only in quantities >3,000 L (793 gallons) in a single packaging. | Security plan not required for PG II and III materials. |
| 9 | Capacity >3,500 gallons for liquid/gas; volumetric capacity >468 cubic feet for solids. | Not subject | Security plan not required for Class 9 materials. |

**II. Coordination With TSA**

DHS is the lead federal agency for transportation and hazardous materials security. DOT consults and coordinates on security-related hazardous materials transportation matters to ensure consistency with DHS requirements and broader security objectives. Both departments work to ensure that the regulated industry is not confronted with inconsistent government-issued security guidance or requirements.

Under Section 101(a) of the Aviation and Transportation Security Act (ATSA, Pub. L. 107–71, November 19, 2001) (codified at 49 U.S.C. 114) and 49 CFR 1502.1, TSA has broad responsibility and authority for "security in all modes of transportation * * *" TSA has additional responsibilities for surface transportation security, as specified in 49 U.S.C. 114(f), through delegation by the Secretary of Homeland Security under the Implementing Recommendations of the 9/11 Commission Act of 2007 (9/11 Commission Act, Pub. L. 110–53; 121 Stat. 266, August 3, 2007).

In sum, TSA's authority with respect to transportation security is comprehensive and supported with specific powers related to the development and enforcement of regulations, security directives, security plans, and other requirements. Under this authority, TSA may identify a security threat to any mode of transportation, develop a measure for dealing with that threat, and enforce compliance with that measure. Moreover, in addition to inspecting for compliance with specific regulations, TSA may conduct general security assessments. Under its authority, TSA may assess threats to transportation security; monitor the state of awareness and readiness throughout the various sectors; determine the adequacy of an owner or operator's transportation-related security measures; and identify security gaps. TSA, for example, could inspect and evaluate for emerging or potential security threats based on intelligence indicators to determine whether the owner or operator's strategies and security measures are likely to deter deficiencies.

When PHMSA adopted its security regulations, it was stated that these regulations were "the first step in what may be a series of rulemakings to address the security of hazardous materials shipments." 68 FR 14511. PHMSA noted in the NPRM that TSA "is developing regulations that are likely to impose additional requirements beyond those established in this final rule" and stated that it would "consult and coordinate with TSA concerning security-related hazardous materials transportation regulations * * *" Id.

In this regard, note that under section 1512 of the 9/11 Commission Act and delegated authority from the Secretary of Homeland Security, TSA must promulgate regulations establishing standards and guidelines for developing and implementing vulnerability assessments and security plans for "high-risk" railroad carriers. TSA published a final rule on rail security on November 26, 2008 (73 FR 72131). That rule established security requirements for freight railroad carriers; intercity, commuter, and short-haul passenger train service providers; rail transit systems; and rail operations at certain, fixed-site facilities that ship or receive specified hazardous materials by rail. It codified the scope of TSA's existing inspection program and requires regulated parties to allow TSA and DHS officials to enter, inspect, and test property, facilities, conveyances, and records relevant to rail security. The rule also requires that regulated parties designate rail security coordinators and report significant security concerns. In addition, the rule requires freight rail carriers and certain facilities handling specified hazardous materials to be able to (1) report location and shipping information to TSA upon request and (2) implement chain of custody requirements to ensure a positive and secure exchange of specified hazardous materials. TSA also clarifies and amends the sensitive security information (SSI) protections to cover certain information associated with rail transportation.

TSA intends to promulgate additional regulations for railroad carriers and other modes of surface transportation that will require them to submit vulnerability assessments and security plans to DHS for review and approval, as well as to develop and implement security training programs for employees performing security-sensitive functions to prepare for potential security threats and conditions. The security plan requirements established by the HMR are to be used as a baseline for security planning. When TSA regulations are issued, the PHMSA security plan and security training requirements for regulated parties that will be subject to the TSA regulations will be reevaluated and revised as appropriate.

To this end, we have worked closely with TSA to align our proposed list of materials subject to security plans with ongoing efforts by TSA in identifying Highway Security Sensitive Hazardous Materials (HSSM). TSA has used its HSSM list in conjunction with voluntary security practices (referred to as Security Action Items or SAIs) to increase the security of certain hazardous materials transported by motor vehicle. Minor differences between our proposal and the TSA HSSM list have been resolved and the overall approach taken by the two agencies in identifying materials that should be subject to security based requirements is consistent and supported by industry associations, offerors, carriers, and private citizens, as evidenced by the comments submitted in response to our NPRM.

Finally, as it implements its transportation security authority, TSA may identify a need to review transportation security plans and programs developed and implemented in accordance with Subpart I of Part 172

of the HMR. Under ATSA, TSA has the authority to "ensure the adequacy of security measures for the transportation of cargo" 49 U.S.C. 114(f)(10) and to "oversee the implementation, and ensure the adequacy, of security measures at airports and other transportation facilities." 49 U.S.C. 114(f)(11). Therefore, parties subject to this regulation must allow TSA and other authorized DHS officials, at any time and in a reasonable manner, without advance notice, to enter and inspect and must provide TSA inspectors with a copy of any security related document required by the HMR or pursuant to TSA's statutory or regulatory authorities. This includes security plans and training documents required under 49 CFR Part 172. TSA does not, however, have the authority to directly enforce DOT safety or security requirements established in the HMR. If, in the course of an inspection of a railroad or motor carrier or a rail or highway hazardous material shipper or receiver, TSA identifies evidence of non-compliance with a DOT safety or security regulation, TSA will provide the information to FRA (for rail) or FMCSA (for motor carriers) and PHMSA for appropriate action. Similarly, since DOT does not have the authority to enforce TSA security requirements, if a DOT inspector identifies evidence of non-compliance with a TSA security regulation or identifies other security deficiencies, DOT will provide the information to TSA for appropriate action.

It is important to note that TSA and DOT have established a tiered approach to transportation security that imposes increasingly stringent security requirements for materials that pose more significant transportation security risks. Thus, the DOT security planning requirements established in 2003 and modified in this final rule establish a baseline requirement for materials that have been determined to pose a security risk across all modes of transportation. However, both TSA and DOT have established more stringent security requirements for certain rail shipments of hazardous materials. As explained in the TSA and DOT final rules on rail security published jointly on November 26, 2008 (73 FR 72130 and 73 FR 72181, respectively), the list of designated "security sensitive" materials to which the enhanced safety and security requirements adopted in those final rules apply—certain shipments of Division 1.1, 1.2, and 1.3, PIH, and radioactive materials—is based on specific railroad transportation scenarios. These scenarios depict how hazardous materials could be deliberately used to cause significant casualties and property damage or accident scenarios resulting in similar catastrophic consequences. DOT and TSA determined that the materials specified in the rail security final rules present the greatest rail transportation safety and security risks—because of the potential consequences of an unintentional release of these materials—and are the most attractive targets for terrorists—because of the potential for these materials to be used as weapons of opportunity or weapons of mass destruction. While DOT and TSA agree that other hazardous materials pose certain safety and security risks, the risks are not as great as those posed by the explosive, PIH, and radioactive materials specified in the rail security final rules. TSA, in consultation with DOT, will continue to evaluate the transportation security risks posed by all types of hazardous materials and the effectiveness of current regulations in addressing those risks and will consider revising specific requirements as necessary.

## III. Comments and Analysis

A total of 160 persons submitted comments in response to the September 9, 2008 NPRM. The majority of the comments were submitted by companies, but we also received comments from public interest groups; local, state, and federal government agencies; industry associations; and private citizens. The majority of commenters focused on the proposed revisions to security plan requirements for explosives that are used by the special effects and motion picture industries. To review rulemakings, regulatory evaluations, environmental assessments, comments, and letters submitted in response to this regulatory action go to *http://www.regulations.gov* under docket number PHMSA–06–25885. To locate a specific commenter by name simply use the search function provided by Regulations.gov.

Generally, commenters express support for the regulatory reduction efforts proposed by the NPRM although some commenters disagree with some of the types and classes of materials that would be subject to security planning requirements under the NPRM. In this comment summary, we address areas of concern, as expressed by commenters, including the key comments regarding the types and classes of materials that we included in the proposed list of materials subject to security plans. We especially focus on aligning our list of materials requiring security plans and TSA's HSSM list. Commenters emphasize that consistency is very important in this area, and we agree. TSA's HSSM list focused on materials that have the potential to cause significant fatalities and injuries or significant economic damage when released or detonated during a transportation security incident. Materials classed as HSSM fall into one of two tiers and are subject to specific voluntary security measures that should be taken by manufacturers, shippers, and carriers of the listed materials.

In this final rule we are revising the list of materials subject to security planning. We made several changes to the list of materials based on comments and discussions with our federal partners. We consulted with TSA throughout the development of this final rule. Below we list by Class/Division the Hazardous materials and thresholds subject to security planning under this final rule. The phrase "large bulk quantity," as used in the following table, refers to a quantity greater than 3,000 kg (6,614 pounds) for solids or 3,000 liters (792 gallons) for liquids and gases in a single packaging such as a cargo tank motor vehicle, portable tank, tank car, or other bulk container.

| Class/ division | PHMSA final rule security plan revisions |
|---|---|
| 1.1 | Any quantity. |
| 1.2 | Any quantity. |
| 1.3 | Any quantity. |
| 1.4 | Placarded quantity. |
| 1.5 | Placarded quantity. |
| 1.6 | Placarded quantity. |
| 2.1 | A large bulk quantity. |
| 2.2 | A large bulk quantity of materials with an oxidizer subsidiary. |
| 2.3 | Any quantity. |
| 3 | PG I and II in a large bulk quantity; placarded quantity desensitized explosives. |
| 4.1 | Placarded quantity desensitized explosives. |
| 4.2 | PG I and II in a large bulk quantity. |
| 4.3 | Any quantity. |
| 5.1 | Division 5.1 materials in PG I and II, and PG III perchlorates, ammonium nitrate, ammonium nitrate fertilizers, or ammonium nitrate emulsions or suspensions or gels in a large bulk quantity. |
| 5.2 | Any quantity of Organic peroxide, Type B, liquid or solid, temperature controlled. |
| 6.1 | Any quantity PIH or a large bulk quantity of a material that is not a PIH. |
| 6.2 | CDC or USDA list of select agents. |
| 7 | IAEA Categories 1 & 2; HRCQ; known radionuclides in forms listed as RAM–QC by NRC; or a quantity of uranium hexafluoride requiring placarding under § 172.505(b). |

| Class/ division | PHMSA final rule security plan revisions |
|---|---|
| 8 ..... | PG I in a large bulk quantity. |
| 9 ..... | Not subject. |
| ORM–D | Not subject. |

Any minor differences between the TSA HSSM list and the above list have been discussed with TSA and resolved.

*A. Applicable Materials and Thresholds (§ 172.800(b))*

As indicated above, the NPRM proposed to narrow the list of materials to which security plan requirements would apply to cover only those materials that pose a significant security risk in transportation. In accordance with § 172.800(b) of the HMR, a security plan is currently required for a quantity of hazardous materials that requires placarding under Subpart F of Part 172. We proposed to remove certain classes of materials from the list and to raise the threshold quantity that would trigger security planning requirements for other classes of materials. Generally, the NPRM proposed to continue the security plan requirement for materials listed in Table 1 of § 172.504, which specifies materials for which placarding is required when any quantity of the material is transported in a bulk packaging, freight container, transport vehicle, or rail car. Thus, we proposed to retain the security plan requirement for any quantity of Division 1.1, 1.2, 1.3 explosive materials; 2.3 poison gases; 4.3 dangerous when wet material; 5.2 Type B organic peroxides, liquid or solid, temperature controlled; and 6.1 materials poisonous by inhalation. We also proposed to require security plans for any quantity of certain Division 1.4 materials, Division 1.5 explosives, Class 3 and Division 4.1 desensitized explosives, and 6.1 materials assigned to Packing Group I.

Several commenters contend that the "any quantity" threshold standard, especially when applied to Table 2 materials (see § 172.504(e)), will present unreasonable and unnecessary compliance challenges for covered persons. We agree that the "any quantity" threshold standard is inappropriate for most Table 2 materials, based on the security risks posed in transportation, and proposed to modify the threshold quantities that would trigger security planning requirements accordingly. The security planning requirement is critical to reducing the security risks associated with a very broad spectrum of hazardous materials. More specific, modal based requirements that apply to larger quantities of material, such as through our rail routing rule, may be required to address specific threats. We are maintaining the "any quantity" threshold because those materials may present a significant security risk under certain modal specific risk-based transportation scenarios even when transported in small amounts.

Dow suggests that we simplify the process of identifying materials for security planning purposes by adding a special provision to the Hazardous Materials Table to identify those materials for which security plans would be required. We disagree with a material-based strategy for identifying high-risk materials. Consistent with our approach to evaluating the safety risks posed by hazardous materials in transportation, we continue to believe that an assessment of hazardous materials security risks should be based on the hazard class and packing group of the material and the quantity or volume transported. In this way, we can ensure that all materials that pose a similar security risk are covered, including mixtures and solutions. Moreover, identifying individual materials through special provisions is inefficient and overly complex.

In the following sections of the preamble we address comments concerning whether specific classes of materials should be subject to security planning requirements.

1. Explosives (Divisions 1.1, 1.2, 1.3, 1.4, 1.5, and 1.6)

The majority of comments received specifically addressed explosives. A total of 125 persons involved with special effects for the motion picture industry submitted comments addressing the proposed threshold for Division 1.4 explosives and desensitized explosives in Class 3 and Division 4.1. Currently, security plans are required for placarded quantities of these materials. In the NPRM, we proposed to require security plans for any quantity of Division 1.4 explosives shipped under certain UN identification numbers and any quantity of desensitized explosives in Class 3 and Division 4.1. Commenters unanimously oppose this provision of the NPRM. The Alliance of Special Effects & Pyrotechnic Operators, Inc. (ASEPO) states that the proposed requirement for security plans to apply to any quantity of Division 1.4 or desensitized explosive materials is unnecessary because secure transportation of the Division 1.4 explosives and desensitized explosives used for special effects has already been achieved under present security measures. ASEPO did not provide details of the security measures currently employed, but stated its belief that the current measures are effective based on the industry's long history of safe and secure transportation of these materials.

The Dangerous Goods Advisory Council (DGAC), Institute of Makers of Explosives (IME), International Society of Explosives Engineers (ISEE), and United Parcel Service of America, Inc. (UPS) suggest that we retain the current threshold for security planning purposes—that is, security plans should be required for explosives, including desensitized explosives, when transported in quantities that require placarding. UPS notes that "shipments are undetectable in commerce unless they reach the level requiring the carrier to apply placards on the vehicle" and suggests that the lack of placards on these shipments enhances their security.

It was not our intent to significantly expand upon current security planning requirements applicable to explosives. In the NPRM, we indicated that most Division 1.4 explosives do not pose a significant transportation security risk and limited security plan requirements to any quantity of a material identified as UN 0104, UN 0237, UN 0255, UN 0267, UN 0289, UN 0361, UN 0365, UN 0366, UN 0440, UN 0441, UN 0455, UN 0456, or UN 0500. Our concern, as expressed in the NPRM, was that Division 1.4 detonators make an attractive target for theft and use as initiating devices for improvised explosive devices (IEDs). In addition, it was our understanding that detonating assemblies and devices such as those listed above were generally shipped with greater quantities of Division 1.1, 1.2, or 1.3 explosives and thus were covered by security plans applicable to those materials. Based on the comments we received, we now understand that the Division 1.4 materials identified in the NPRM are frequently transported in small quantities and in separate shipments from Division 1.1, 1.2, and 1.3 materials.

Because of the strongly adverse comments we received on this issue, and after consulting with TSA, we re-evaluated the proposal to require security plans for shipments of any quantity of Division 1.4 detonators in the specified UN numbers. We agree with commenters that the security risks associated with the transportation of small numbers of these devices are not sufficient to warrant the development and implementation of security plans, particularly given the security measures voluntarily utilized by shippers and carriers. Therefore, in this final rule we are not adopting the proposed revision applicable to Division 1.4 explosives.

Instead, the security planning requirement will apply, as it does now, to all Division 1.4 explosives transported in quantities that require placarding under Subpart F of Part 172 of the HMR.

Currently, a security plan is required for Division 1.5 and 1.6 explosives transported in a quantity that requires placarding. In the NPRM, we proposed to require security plans for any quantity of Division 1.5 materials and remove Division 1.6 explosives from the list of materials for which a security plan is required. Commenters indicate that the proposed revisions to the thresholds for both Division 1.5 materials and 1.6 materials are not necessary. IME and ISEE suggest the inclusion of all explosives at the current level—quantities requiring placarding—has proven to be effective. In regard to Division 1.6 explosives, the Department of Defense Explosives Safety Board (DDESB) does not disagree with our statements in the NPRM regarding the insensitivity of Division 1.6 materials, but indicates that their insensitivity can be overcome by suitable boostering, with results similar to that of a Division 1.2 material. In its comments, DDESB recommends that any quantity of Division 1.6 explosives be included in the list of hazardous materials that require security plans. Though we do not agree that the any quantity threshold is appropriate for Division 1.6 materials, we do agree that security plans should be required for explosives at a given threshold. As a result, this final rule will not eliminate security plan requirements applicable to Division 1.5 and 1.6 materials. Security plans will continue to be required for Division 1.5 and 1.6 materials that are offered for transportation or transported in quantities that require placarding.

We did not propose to change current security planning requirements applicable to Division 1.1, 1.2, and 1.3 explosives in the NPRM. Commenters agree that security plans should be required for these materials when transported in any quantity. In this final rule, we are retaining the current requirement. Thus, without regard to the mode by which the material is transported, shippers and carriers of Divisions 1.1, 1.2, and 1.3 explosives (transported in any quantity) and Divisions 1.4, 1.5, and 1.6 explosives (transported in quantities that require placarding) must develop and implement security plans. Note that the security planning requirements are triggered by the offering or transportation of a hazardous material in a quantity that requires placarding, not by the absence or presence of a placard on a given shipment.

2. Flammable Gases (Division 2.1)

Currently, security plans are required for shipments of Division 2.1 materials when transported in a quantity requiring placarding. In the NPRM, we proposed to raise the threshold trigger for security planning purposes to a quantity greater than 3,000 L (793 gallons). We concluded that shipments of flammable gases in quantities of 3,000 L (793 gallons) or less in a single package do not pose a transportation security risk warranting development and implementation of security plans.

Two commenters address the proposed requirements for compressed gases in Division 2.1. The Gases and Welders Distribution Association supports the proposed changes, suggesting that adopting a threshold that is consistent with security planning provisions in the UN recommendations will facilitate compliance for international transportation and reduce costs for shippers and carriers handling such materials in international commerce. The National Propane Gas Association (NPGA) suggests that propane should not be considered a weapon of mass destruction and it should not be subject to security plans. We disagree. Propane is among the liquefied compressed gases most commonly transported throughout the nation. When liquid propane is released into the atmosphere, it quickly vaporizes into the gaseous form that is its normal state at atmospheric pressure. This happens very rapidly, and in the process, the propane combines readily with air to form fuel air mixtures that are ignitable over a range of 2.2 to 9.5 percent propane by volume. If an ignition source is present in the vicinity of a highly flammable mixture, the vapor cloud ignites and burns very rapidly (characterized by some experts as "explosively"). Based on these characteristics and the frequency with which propane is transported in this country, we believe that propane presents a sufficient security risk to warrant the imposition of security plan and security training requirements when transported in quantities greater than 3,000 L (793 gallons).

In this final rule, we are adopting the proposed threshold for Division 2.1 materials to require security plans for amounts greater than 3,000 L (793 gallons) in a single package or container.

3. Nonflammable Gases (Division 2.2)

Currently, security plans are required for shipments of Division 2.2 materials when offered for transportation or transported in amounts that require placarding. In the NPRM, we proposed to remove most Division 2.2 materials from the list of materials for which security plans are required because the hazard characteristics of these materials do not lend themselves to terrorist or criminal use. However, we proposed to require security plans for oxygen and for other Division 2.2 gases that are oxidizers because they can be used to increase the likelihood and intensity of a fire or other chemical reaction. We also proposed to include any Division 2.2 compressed gas with a subsidiary hazard of Division 5.1 oxidizer for the same reason.

Commenters who addressed this issue oppose the proposal to require security plans for shipments of oxygen and other oxidizing gases. The Compressed Gas Association (CGA) contends that oxygen should be transported without any additional security regulations based on industry experience and its analysis of possible security scenarios. For example, CGA provides an assessment of the impact of firing a shoulder-launched rocket into a large cryogenic oxygen tank. The analysis concludes that the rocket would do nothing more than put a hole in the tank and harmlessly release oxygen into the atmosphere. DGAC on the other hand, supports the inclusion of oxygen, but asserts that the inclusion of other Division 2.2 materials with an oxidizing hazard is not necessary. DGAC contends that it is difficult to imagine how gases such as compressed or liquefied air would be used in an attack.

As discussed in the NPRM, Division 2.2 compressed gases generally do not pose a security threat sufficient to warrant specific security planning measures. However, oxygen and other oxidizers enhance the combustion of other materials, thereby increasing the likelihood and intensity of a fire or other chemical reaction. At least 7 million tons of oxygen are transported by motor carriers each year. Because of its oxidizing characteristics and the volume transported, we continue to believe that large shipments of oxygen should be subject to security planning requirements. Therefore, in this final rule we are requiring shippers and carriers of oxygen and other Division 2.2 compressed gases with a subsidiary hazard of Division 5.1 oxidizer, in quantities greater than 3,000 L (793 gallons) in a single package or container, to develop and implement security plans. A list of Division 2.2 oxidizing gases that are authorized for transportation in large bulk quantities is provided below.

| Proper shipping name | Hazard class | Identification Nos. | Label code |
|---|---|---|---|
| Air, refrigerated liquid, (cryogenic liquid) | 2.2 | UN1003 | 2.2, 5.1 |
| Air, refrigerated liquid, (cryogenic liquid) non-pressurized | 2.2 | UN1003 | 2.2, 5.1 |
| Compressed gas, oxidizing, n.o.s. | 2.2 | UN3156 | 2.2, 5.1 |
| Gas, refrigerated liquid, oxidizing, n.o.s. (cryogenic liquid) | 2.2 | UN3311 | 2.2, 5.1 |
| Liquefied gas, oxidizing, n.o.s. | 2.2 | UN3157 | 2.2, 5.1 |
| Nitrous oxide | 2.2 | UN1070 | 2.2, 5.1 |
| Nitrous oxide, refrigerated liquid | 2.2 | UN2201 | 2.2, 5.1 |
| Oxygen, compressed | 2.2 | UN1072 | 2.2, 5.1 |
| Oxygen, refrigerated liquid (cryogenic liquid) | 2.2 | UN1073 | 2.2, 5.1 |

4. Materials Poisonous by Inhalation (Division 2.3 and 6.1)

Currently, poison-inhalation-hazard (PIH) materials are subject to security planning requirements when offered for transportation or transported in any quantity. We did not propose to change this requirement in the NPRM.

We received several comments regarding the inclusion of anhydrous ammonia as a Division 2.3 material. The Association of American Railroads (AAR), Utility Solid Waste Activities Group (USWAG), and The Fertilizer Institute (TFI) request clarification of the requirements applicable to anhydrous ammonia. In addition, Dominion asks, "Under what circumstances [do] anhydrous ammonia shipments trigger the security plan requirements."

In proposed § 172.800(b)(6) we state that "any quantity of a material poisonous by inhalation, as defined in § 171.8" is subject to security plan requirements (73 FR 52571). Section 171.8 defines a "material poisonous by inhalation" as a:

(1) Gas meeting the defining criteria in § 173.115(c) and assigned to Hazard Zone A, B, C, or D in accordance with § 173.116(a);

(2) Liquid meeting the defining criteria in § 173.132(a)(1)(iii) and assigned to Hazard Zone A or B in accordance with § 173.133(a); or

(3) Material identified as an inhalation hazard in column 7 of the § 172.101 table.

Anhydrous ammonia meets the definition of a PIH material because it is identified as having an inhalation hazard in column 7 of the Hazardous Materials Table (HMT) and, therefore, is subject to security planning requirements when offered for transportation or transported in any quantity. More generally, we note that many materials, such as those identified by a plus sign in column 1 of the § 172.101 table, pose hazards that are not identified as the primary hazard in column 3 of the HMT. While anhydrous ammonia is classed for domestic transportation as a Division 2.2 material, it does pose a significant inhalation hazard and, thus, should be subjected to safety and security requirements that address that hazard. We note further that by requiring security plans for materials that meet the definition for a material poisonous by inhalation, all materials that exhibit PIH characteristics are covered even if they are not specifically identified in column 3 of the § 172.101 table as Division 2.3 or 6.1 materials. Therefore, whether the material is anhydrous ammonia, boron tribromide, ethyl chlorothioformate, phosphorus oxychloride, or sulfuric acid, for example, it is subject to the security plan requirements under proposed section 172.800(b)(6), at any quantity.

In this final rule, we are maintaining the existing any quantity threshold for PIH materials.

5. Desensitized Explosives (Class 3 and Division 4.1)

Desensitized explosive substances are explosive materials that have been rendered non-explosive, according to the UN Manual of Tests and Criteria, by means of adding a diluting liquid or solid. The diluted substances, once tested and found not in Class 1, are regulated under the HMR as Division 4.1 flammable solids or Class 3 flammable liquids, depending on their physical state and hazardous properties. Currently, security plans are required for shipments of desensitized explosives in quantities that require placarding. In the NPRM, we proposed to require security plans for shipments of any quantity of desensitized explosives because many desensitized explosives can be readily reconstituted into explosive materials.

We received well over 100 comments regarding the proposed security plan threshold for desensitized explosives. Generally, persons involved with special effects for the motion picture industry indicate they do not support changing the current placarding requirement to a requirement that applies to any quantity. Similarly, ASEPO, IME, the American Trucking Associations (ATA), UPS, DGAC, and Canadian Trucking Alliance (CTA) all disagree with the proposed requirement to regulate any quantity of desensitized explosives. IME suggests that the "any quantity" threshold should be reserved for materials that would contribute to the consequences of a direct attack on the transportation conveyance. According to IME, desensitized explosives would not be expected to contribute to the consequences of such an incident. ATA, UPS, and CTA indicate if we require security plans for any quantity of desensitized explosives we should identify specific materials to which the security plan requirements would apply.

As we noted in the NPRM, desensitized explosives have been used in terrorist attacks in the United States and overseas. Urea nitrate, for example, has been used in a number of terrorist attacks, most notably the first vehicle-borne improvised explosive device attack on the World Trade Center in 1993. Moreover, requiring a security plan for any quantity of a desensitized explosive in Class 3 or Division 4.1 is consistent with the UN requirements. In addition, TSA's HSSM list for SAIs has included any quantity of desensitized explosives in Class 3 and Division 4.1 in Packing Group I and lists specific Packing Group II desensitized explosives that are also included. However, after discussing our concerns with TSA and reviewing the comments, we agree with commenters that the "any quantity" threshold for a material that needs further processing to be used in a terrorist attack is an unnecessary burden. Just as we concluded with Division 1.4 materials, the existing placarding threshold is commensurate with the security risk associated with desensitized explosives in Class 3 and Division 4.1. Therefore, in light of comments received from explosives manufacturers, shippers, and carriers, and resulting discussions with TSA, we have decided to maintain the current threshold. Accordingly, in this final rule, desensitized explosives in Class 3 and Division 4.1 are subject to the

security plan requirements in a quantity of 454 kg (1,001 pounds) or more in a single transport vehicle or freight container (see exception in § 172.504(c)).

6. Flammable Liquids (Class 3—Other Than Desensitized Explosives)

Currently, the HMR require security plans for both flammable and combustible liquids when offered for transportation or transported in quantities requiring placarding. In the NPRM, we proposed to require security plans for shipments of 3,000L (793 gallons) or more in a single packaging of any Class 3 material. DGAC opposes subjecting Class 3 materials to the security plan requirements because they can be easily acquired outside of transportation.

As we stated in the NPRM, flammable liquids burn vigorously, giving off large quantities of intense heat. Some may produce flammable atmospheres in confined spaces that, when ignited, could cause significant damage through deflagration or detonation. Class 3 materials could be used in a terrorist attack to trigger a large, intense fire that could cause deaths, injuries, and damage to buildings and infrastructure. To be effective, such an attack would necessarily involve a large quantity of flammable liquid. We disagree with DGAC's comment that flammable liquids should be dropped from security planning entirely. Large quantities of flammable liquids pose a significant security risk that can be mitigated through security planning. However, after consultation with TSA, we have concluded that the security risks associated with Class 3 materials are most significant for large quantities in Packing Groups I and II. Therefore, this final rule requires a security plan for Packing Group I and II flammable liquids in amounts greater than 3,000 L (793 gallons) in a single package or container.

7. Flammable Solids (Division 4.1)

In the NPRM, we proposed to eliminate security plan requirements for flammable solids, except for desensitized explosives in Division 4.1, which we discussed above. There were no comments addressing our proposal. In this final rule, we are adopting the proposal to limit the applicability of security plans to Division 4.1 materials that are desensitized explosives.

8. Spontaneously Combustible Materials (Division 4.2)

Currently, security plans are required for quantities of Division 4.2 materials that require placarding. The NPRM proposed to retain the security plan requirement for shipments of more than 3,000 kg (6,614 lbs.) in a single packaging of Division 4.2 materials in Packing Groups I and II and to eliminate the security plan requirement for Division 4.2 materials in Packing Group III. Only one commenter addressed the proposed threshold for spontaneously combustible materials. DGAC does not agree with our decision to include Division 4.2 materials in Packing Group II. Further, DGAC notes that both the UN and TSA's HSSM list for SAIs have set the threshold at the 3,000 kg (6,614 lbs.) level for Packing Group I materials only.

The UN does set the threshold at 3,000 kg (6614 lbs.) for Packing Group I materials, but TSA's HSSM list includes both Packing Group I and Packing Group II materials. Though we would like to harmonize with the UN requirements when at all possible, the goal of this rulemaking is to ensure that security planning requirements apply to materials that pose a security risk in transportation. DGAC did not provide sufficient reasoning as to why we should require security plans at the Packing Group I level only. Based on our consultations with TSA concerning the security risks associated with the transportation of Division 4.2 materials, this final rule requires security plans for more than 3,000 kg (6,614 lbs.) of Division 4.2 materials in Packing Groups I and II in a single packaging.

9. Dangerous When Wet (Division 4.3)

Currently, the HMR require security plans for shipments of Division 4.3 materials in any quantity. We did not propose to change this requirement in the NPRM.

Very few comments address this issue. DGAC supports the inclusion of Division 4.3 in Packing Group I, but not Division 4.3 materials in Packing Groups II and III. According to DGAC, the amount of flammable gas that would evolve from materials in Packing Groups II and III is likely to be significantly less than propane or a similar flammable gas. CTA, ATA, and UPS indicate that the any quantity threshold is inappropriate and urge PHMSA to consider the 3,000 kg (6,614 lbs.) threshold for Division 4.3 materials. Commenters contend that it is not necessary to include such small amounts of materials that are often commercially available.

Division 4.3 materials are water reactive—they emit flammable or toxic gases upon contact with water. Division 4.3 materials may be of interest to terrorists planning a toxic gas attack on crowded venues like subways, buses, shopping centers, or movie theaters. PHMSA, after consulting with TSA, continues to support the current requirement for security plans for shipments of Division 4.3 materials in any quantity. The any quantity threshold provides an appropriate level of security, given the potential vulnerabilities and risks associated with these materials. Therefore, this final rule continues to require security plans for shipments of any quantity of Division 4.3 materials.

10. Oxidizers (Division 5.1)

Currently, the HMR require security plans for shipments of Division 5.1 materials in quantities that require placarding. In the NPRM, we proposed to require security plans for Division 5.1 materials in Packing Groups I and II when transported in quantities greater than 3,000 L (793 gallons) in a single packaging, and for perchlorates and ammonium nitrate when transported in quantities greater than 3,000 kg (6,614 lbs.) for solids and 3,000 L (793 gallons) for liquids in a single packaging.

Three commenters address this proposal. DGAC contends that Division 5.1 materials in Packing Group II will be relatively ineffective in an attack and proposes that they not be included. TFI and IME ask for clarification of the proposed requirement and its applicability to solid and liquid materials and the threshold quantities for each.

We disagree with DGAC's suggestion that Packing Group II materials are ineffective oxidizers and should be removed from the list of materials requiring a security plan. As we indicated in the NPRM, an oxidizer is a material that may cause or enhance the combustion of other materials, generally by yielding oxygen. Some oxidizers may explode when heated. Division 5.1 oxidizing materials are frequently used as components of IEDs.

TFI and IME are correct that the regulatory text proposed in the NPRM was not clear and should be clarified in the final rule. Therefore, in this final rule we clearly indicate in regulatory text that the security plan requirements apply to Division 5.1 materials in Packing Groups I and II; perchlorates; and ammonium nitrate, ammonium nitrate fertilizers, or ammonium nitrate emulsions, suspensions, or gels in a single packaging, in a quantity greater than 3,000 kg (6,614 lbs.) for solids or 3,000 L (793 gallons) for liquids.

11. Organic Peroxides (Division 5.2)

The HMR currently require security plans for liquid or solid Type B, temperature controlled Division 5.2

organic peroxides transported in any quantity. The NPRM did not propose changes to this requirement. DGAC does not support the inclusion of Division 5.2, Type B materials on the list of materials that require a security plan. DGAC contends that as packaged for transportation these materials will not react dangerously.

PHMSA agrees with DGAC that organic peroxides are packaged in a safe manner, but does not agree that safe packaging adequately ensures that a material is secure during transportation. DGAC did not explain how packaging for Division 5.2, Type B materials makes them more secure than other properly packaged materials. PHMSA, after consulting with TSA, agrees that Division 5.2, Type B materials should be subject to security plan requirements when transported in any quantity. As discussed in the NPRM, organic peroxides are temperature sensitive, self-reacting materials that pose both a fire and explosion hazard, and may be both toxic and corrosive. Type B organic peroxides are the most dangerous organic peroxides permitted in transportation. Organic peroxides were used in the July 2005 terrorist bombings in London, and were planned for use by terrorists plotting to destroy aircraft flying from the United Kingdom to the United States. The current security planning requirement provides an appropriate level of security, given the potential vulnerabilities and risks associated with these materials. In this final rule, we are continuing to require a security plan for any quantity of Division 5.2 organic peroxide, Type B, liquid or solid, temperature controlled, as proposed.

12. Poisonous Materials (Division 6.1—Other Than PIH)

Security plans are currently required for shipments of Division 6.1 materials in quantities that require placarding. In the NPRM, we proposed to require security plans for shipments of Division 6.1, Packing Group I materials in any amount and shipments of 3,000L (793 gallons) or more of Division 6.1, Packing Groups II and III materials. DGAC, ATA, UPS, and CTA all suggest that a single packaging threshold of more than 3,000 kg (6,614 lbs.) for solids or 3,000 L (793 gallons) for liquids for all Division 6.1 materials would be more appropriate than the "any quantity" threshold we proposed for Division 6.1 materials in Packing Group I.

After consultation with TSA and based on the comments we received, we agree that a large bulk quantity threshold for Division 6.1 materials in Packing Group I is more appropriate than the "any quantity" threshold proposed in the NPRM. As we indicated in the NPRM, Division 6.1 materials can be used to contaminate food and water supplies; however, the effectiveness of such an attack would depend on the toxicity level of the material and the quantity utilized. The security risks of these materials, therefore, vary based on the quantity transported. In this final rule, we are adopting a security plan threshold trigger of more than 3,000 kg (6,614 lbs.) for solids or 3,000 L (793 gallons) for liquids for poisonous materials (other than PIH) in Packing Groups I, II, and III.

13. Infectious Substances and Select Agents (Division 6.2)

Currently, the HMR require security plans for shipments in any quantity of Division 6.2 materials that are designated as select agents by the Centers for Disease Control and Prevention and the U.S. Department of Agriculture. The NPRM did not propose to change this requirement. We received very few comments concerning this aspect of the NPRM. ATA agrees that the "any quantity" threshold is appropriate for Division 6.2 materials; DGAC suggests that security plans should only be required for Division 6.2 materials transported in bulk quantities. We note concerning the DGAC comment that select agents typically are not transported in bulk quantities and that even small quantities of these materials may be developed as weapons to cause serious and significant outbreaks of disease in humans and animals. The current security planning requirements provide an appropriate level of security, given the potential vulnerabilities and risks associated with these materials. Therefore, as proposed, this final rule continues to require security plans for select agents or toxins regulated by the Centers for Disease Control and Prevention under 42 CFR Part 73 or the United States Department of Agriculture under 9 CFR Part 121.

14. Radioactive Materials (Class 7)

The current security plan requirements apply to a person who offers for transportation or transports a highway route-controlled quantity (HRCQ) of a Class 7 (radioactive) material. The HMR also require security plans for any shipment that requires placarding under Subpart F of Part 172; this includes shipments of packages with radioactive Yellow III labels and exclusive use shipments of low specific activity material and surface contaminated objects. In the NPRM we proposed to adopt security thresholds as established by the International Atomic Energy Agency (IAEA) for radioactive materials in transport. The levels reflect research conducted by the U.S. Department of Energy, the U.S. Nuclear Regulatory Commission (NRC), and the IAEA on the attractiveness of radionuclides for malevolent use. The changes proposed in the NPRM better address security concerns and align the HMR with international and domestic security requirements. Similarly, TSA's HSSMs list for SAIs has included IAEA Code of Conduct Category 1 and 2 materials including HRCQ quantities as defined in 49 CFR 173.403 or known as radionuclides in forms listed as RAM–QC by the Nuclear Regulatory Commission. Both lists are virtually identical.

Commenters propose enhancements to make the requirements clear, but do not oppose the thresholds proposed in the NPRM. In their comments, AAR and Norfolk Southern Railway Company (Norfolk Southern) suggest that we implement a shipping paper notification requirement on rail shippers to enable easy identification of shipments that exceed the threshold quantity. Another commenter, Louisiana Energy Services, LLC (LES), recommends that PHMSA address the requirement in § 172.505(b) involving transportation restrictions on uranium hexafluoride ($UF_6$).

With regard to the comments from AAR and Norfolk Southern, we note that the information required to determine if a radioactive material meets the proposed security plan requirements is already available. It is the carrier's responsibility to determine if it has accepted for transportation a quantity of radioactive materials that trigger security plan requirements. In accordance with § 172.203(d), the shipper is already required to include the name of the radionuclide and the activity level contained in each package. From that information, the carrier may calculate the "sum of the fractions" as described in 10 CFR, Appendix P to Part 110—Category 1 and 2 Radioactive Material to determine if the threshold limit has been met. If the calculated "sum of the fractions" ratio is greater than 1 then the shipment exceeds the threshold limit. In addition, of course, a carrier may simply ask the shipper of the material whether the shipment exceeds the threshold limit for which security plans are required. Indeed, shippers and carriers should discuss security planning issues when they make arrangements for transporting any hazardous material.

We agree with LES that security plan requirements should continue to apply to 1,001 pounds (454 kg) or more of $UF_6$. As a result, we have included a

provision to mandate security plans for quantities of $UF_6$ at or in excess of 1,001 pounds (454 kg), as provided by § 172.505(b). In addition, we believe that TSA's HSSM list more clearly and effectively lists the materials that should be subject to security planning. As such, we have decided to use similar language in this final rule. In addition to the $UF_6$ requirement, we specifically indicate that security plans are required for IAEA Code of Conduct Category 1 and 2 materials including HRCQ quantities as defined in 49 CFR 173.403 or known as radionuclides in forms listed as RAM–QC by the Nuclear Regulatory Commission.

15. Corrosive Materials (Class 8)

The HMR currently require security plans for placarded shipments of Class 8 materials in all packing groups. In the NPRM we proposed to retain security plan requirements for shipments of Class 8, Packing Group I materials in a single packaging, in a quantity of 3,000 kg (6,614 lbs.) or more for solids or 3,000 L (793 gallons) or more for liquids. As we indicated in the NPRM, lesser amounts pose little, if any, security risk. There were no comments addressing our proposal. Therefore, this final rule adopts a threshold for Packing Group I corrosive materials in a quantity of greater than 3,000 kg (6,614 lbs.) for solids or 3,000 L (793 gallons) for liquids in a single packaging.

16. Miscellaneous Hazardous Materials (Class 9)

Currently, the HMR require security plans for Class 9 materials transported in a bulk packaging with a capacity equal to or greater than 13,248 L (3,500 gallons) for liquids or gases or greater than 13.24 cubic meters (468 cubic feet) for solids. In the NPRM, we indicated that the security risks associated with the transportation of these materials are not sufficient to warrant development and implementation of security plans and proposed to eliminate this requirement. Comments were supportive of our decision. As a result, this final rule eliminates existing security plan requirements applicable to Class 9 materials.

*B. Revisions to Security Plan Requirements*

In addition to the changes to the applicability of security plans, the NPRM proposed a number of amendments to clarify and enhance current security requirements, including requirements for security plans and for training. These proposals and corresponding comments are discussed and finalized below.

1. Site-Specific/Location-Specific (§ 172.802(a))

Security plans must include an assessment of possible transportation security risks for the covered materials. In the NPRM we proposed to clarify this requirement by stating that the required risk assessment must include an assessment of the risks that exist on specific routes or in specific locations. Comments submitted varied. Most commenters suggest that requiring a written route assessment for every route or location is unworkable and would seriously impair a carrier's ability to do business. By contrast, commenters such as the Airline Pilots Association, International (ALPA) and National Association of SARA Title III Program Officials (NASTTPO) indicate that the strengthening of the requirements, to include site-specific or location-specific security risks, is a well-advised addition of specificity. However, NASTTPO questions the omission of a requirement for consultation with local emergency planners, law enforcement, or fire departments.

It was not our intent in the NPRM to propose a revision to § 172.802(a) that would alter existing regulations in such a manner that a written security plan, including the risk assessment, would need to address each site or location along a transportation route. Our intent was to clarify that generic security plans that are not specific to a facility or location or corporate security plans that do not address security risks associated with a particular facility or location may not satisfy the risk assessment requirement. For example, it is our understanding that corporations frequently develop security plan templates for use by facilities or entities within the corporation. To meet the risk assessment requirement in § 172.802(a), each entity would need to adapt the corporate security plan template to address site-specific issues or vulnerabilities. Given the confusion expressed by commenters, we are revising the proposed text in this final rule to more clearly state that shippers and carriers must consider site-specific risks and vulnerabilities at facilities subject to the security planning requirement.

2. Identification, Duties, and Training (§ 172.802(b))

In the NPRM we proposed in § 172.802(b)(1) that the security plan identify, by job title, the senior management official responsible for the overall development and implementation of the plan. We proposed in § 172.802(b)(2) that the security plan include security duties for each position or department that is responsible for the plan's implementation and the process for notifying employees when specific elements of the security plan must be implemented. In addition, to ensure that employees are aware of their training obligation by their employer, we proposed in § 172.802(b)(3) that hazmat employers develop a plan for training hazmat employees in accordance with § 172.704 (a)(4) and (a)(5) of this part. One commenter, ALPA, expressed support for the addition of § 172.802(b)(1) through (3). Specifically, the Association welcomes that the proposed language requires "the identification of job title for the responsible management official, security duties identified for each position or department responsible for implementing the plan, and the specifics of required training procedures."

We agree with the commenter, the language proposed in § 172.802(b)(1) through (3) of the NPRM provides necessary clarity and responsibility for compliance with security plan requirements. In this final rule we are adopting § 172.802(b) as proposed.

3. Security Assessment in Writing (§ 172.802(c))

Section 172.802 of the HMR establishes the components that must be included as part of a hazardous materials transportation security plan. Paragraph (a) of this section requires that a security plan include an assessment of possible transportation security risks associated with the hazardous materials covered by the security plan and appropriate measures to address the identified security risks. This assessment is part of the plan and must be in writing and maintained with the plan in accordance with § 172.802(b). Stakeholders have indicated that there is some confusion as to whether the security risk assessment is part of the security plan and if it must be in writing. To clarify concerns, the NPRM proposed language indicating that the security plan, including the security risk assessment, must be in writing and must be retained for as long as the plan remains in effect. One commenter, DGAC, opposes the requirement for assessments to be written, suggesting that written vulnerability assessments provide little to no security benefit and impose a paperwork burden. We disagree with DGAC. The risk assessment is the foundation of a security plan. If the assessment is not in writing, it will be difficult for a company to match the

components of its security plan to the vulnerabilities identified. Moreover, in the absence of a written risk assessment, it will be difficult—if not impossible—for enforcement personnel to determine whether a security plan conforms to HMR requirements.

We note concerning the proposal in the NPRM that the requirement for a risk assessment to be included in the security plan is not a new requirement. We have addressed this and the requirement for plans to be in writing in guidance issued over the last several years. For example, in a February 27, 2004 letter to Mr. Jim Smith (Ref. No. 04–0293; Docket entry PHMSA–06–25885–0175), we clearly stated that a security plan must include an assessment of possible transportation security risks for shipments of the covered hazardous materials and appropriate measures to address the assessed risks. At a minimum, the security plan must address personnel security, unauthorized access, and en route security issues. Similarly, in a May 16, 2007 letter to Ms. Susan Leith (Ref. No. 07–0086; Docket entry PHMSA–06–25885–0176), we agreed with the requester that the security plan must be in writing. We indicated that posting a security plan on a company's intranet that is accessible to company employees on a need-to-know basis and readily printed if necessary would be considered "in writing." In light of stakeholder concerns, this final rule clarifies existing requirements for including the risk assessment as part of the overall security plan by adopting the language proposed in § 172.802(c).

4. Annual Review (§ 172.802(c))

In the NPRM we proposed a requirement for the security plan to be reviewed at least annually and updated if circumstances change (e.g., acquisitions, mergers, operating rights, materials transported, and expanded or reduced service levels). Dominion, Arkema Inc., USWAG, ATA, and NTTC all indicate that the requirement for security plans to be updated as necessary to reflect changing circumstances is sufficient and that it is unclear how requiring annual review increases the effectiveness.

When we adopted the requirement for security plans to be updated as necessary to reflect changing circumstances, our expectation was that plans would be reviewed at least annually and perhaps more often so that they could be updated to reflect changing circumstances. According to stakeholders and PHMSA enforcement personnel, plans are not being reviewed regularly. As a result, plans are not updated. The addition of a requirement for annual review and update to reflect changing circumstances will ensure that shippers and carriers keep abreast of changing conditions that affect the security of the shipments they handle and ensure that security measures in place are appropriate and effective. By their nature, security considerations are always changing and must be continually evaluated at the ground level by offerors and transporters to be effective. Therefore, in this final rule, we are adopting the proposed requirement for the security plan to be reviewed at least annually and updated to reflect changing circumstances.

5. Risk Assessment and Security Plan Documentation (§ 172.802(c) and (d))

In the NPRM we proposed a requirement for the security plan to be made available to employees. Currently, and as proposed in the NPRM, the security plan must include an assessment of transportation security risks. Commenters expressed concern regarding the vulnerabilities that may develop from broad distribution of the entire security plan, especially the risk assessment. In addition, one commenter, Arkema Inc., requests clarification on what is required for a risk assessment—it asks for an example of the methodology that should be used and what should be maintained at the corporate vs. site-specific level.

We agree with commenters that the distribution of security plans to employees without regard to job function and need-to-know, may not be in the best interest of security. Generally, we believe that employees should be involved in the risk assessment process at the onset. Employees should be given the opportunity to discuss security concerns of which they are aware and recommend measures that may be used to address identified risks. However, consistent with personnel security clearance or background check investigation restrictions and demonstrated need-to-know, it is at the discretion of the hazmat employer as to the extent to which employees are granted access to the completed plan. At a minimum, the employees need to be made aware of security changes and activities for which they are responsible. We believe that the language provided in § 172.802(c) of the NPRM is adequate to allow employers to make employees aware of the overall security posture of the company and of their specific security roles and responsibilities, without requiring them to share the entire plan. As a result, we are adopting the language as proposed.

In response to Arkema's request for clarification regarding the requirements for maintaining documentation, current and proposed security plan requirements indicate that the security plan, which includes the risk assessment, must be maintained in writing and for as long as it remains in effect. Each person must maintain the security plan at its principal place of business. Generally, the principal place of business is the location of the head office of a business where the books and records are kept and/or management works. However, for companies that operate more than one site or facility for which security plans are required, the security plan must be readily available to the employees responsible for implementing the plan and must be provided at a reasonable time and location to an authorized official of DOT or TSA and other authorized DHS officials upon request. Therefore, each facility must have the plan on file or have the capability of accessing or receiving the plan from the principal place of business. This final rule adopts the requirement as proposed in the NPRM. Note that for purposes of compliance with this requirement, a shipper or carrier may maintain its security plan electronically, such as on a secure intranet site or CD, so long as it can be accessed by employees responsible for its implementation, printed and distributed as necessary, and provided expeditiously to enforcement personnel upon request.

In response to Arkema's request for an example of the methodology that should be used when conducting risk assessments, we point to the Risk Management Self-Evaluation Framework (RMSEF) on our website. The framework illustrates how risk management methodology can be used to identify points in the transportation process where security procedures should be enhanced within the context of an overall risk management strategy. The RMSEF is posted on our website at the following URL: *http://www.phmsa.dot.gov/hazmat/risk/rmsef.* Other risk assessment tools are equally valid. This final rule does not require persons subject to the security plan requirement to use a specific risk assessment tool to meet the risk assessment requirement. Using risk assessment methodology, a company will select an appropriate level of detail for its security plan based on the assessed risks identified for such material or materials. Factors that may be considered are the type or types of materials transported, the quantity of material transported, the area from or to

which the material is shipped, and the mode of transportation used.

*C. Security Training*

In the NPRM we proposed to clarify that the in-depth security training requirements in § 172.704(a)(5) apply only to hazmat employees who are directly involved with implementing security plans. Companies that are subject to the security plan requirements in Subpart I of Part 172 are required to provide in-depth training concerning their security plan and its implementation. Additionally, as discussed above, the NPRM proposed to require security plans to be reviewed at least once each year and updated as necessary to reflect changing circumstances. The in-depth security training requirement must be provided to hazmat employees responsible for the plan's implementation once every three years, in accordance with § 172.704(c). To align these requirements the NPRM proposed to require in-depth security training once every three years or, if the security plan is revised during the recurrent training cycle, within 90 days of implementation of the revised security plan. In this way, those hazmat employees responsible for implementing the security plan will be trained in a timely manner concerning any changes or revisions to the plan.

USWAG does not support the provision in proposed § 172.704(c)(2) requiring recurrent training when the security plan is revised. USWAG suggests that we limit the recurrent training to "changes that affect the critical components of the security plan, namely 'unauthorized access' and 'en route security' as identified by § 172.704(a)(2) and (3) and only for those employees affected." Norfolk Southern states, "PHMSA should provide a distinct break between the foregoing first two categories of hazmat employees (those handling hazmat or performing regulated hazmat function) versus key employees who are responsible for implementing a railroad's security plan." Another commenter, AAR states, "in-depth training is appropriate for employees responsible for implementing a security plan." According to AAR, in-depth training is not appropriate for employees who handle the materials or perform a regulated function.

Current language requires each employee of a hazmat employer that has a security plan to be provided in-depth security training. Similarly, we currently require recurrent training when changes are made that impact the hazmat employee's job function. For example, if we publish a new regulation, change an existing regulation, or if an employer revises a security plan, a hazmat employee must be instructed in those new or revised requirements without regard to the three year training cycle. Therefore, the revisions to the training requirements simply clarify existing requirements. In this final rule we are adopting the requirements in § 172.704 as proposed.

*D. Other Comments*

1. One Time Shipments

The NPRM did not address the concept of one-time shipments. Various commenters support regulatory relief for one-time or first-time shipments of materials that require security plans. One commenter, Dominion, suggests that PHMSA except facilities with "one-time" shipments or events from the security plan requirements and provide a reasonable period of time for new companies to institute security plans. Another commenter, USWAG, requests that we clarify our expectations for "facilities that are faced with two distinct factual scenarios: (i) Where a facility has triggered a security plan threshold but does not expect to trigger any threshold in the future (i.e., 'one-time' event) and (ii) where a facility has triggered a threshold and will likely trigger a security plan threshold in the future."

The security plan requirements apply to any person who offers and/or transports listed hazardous materials in commerce. They have been established to promote the secure transportation of hazardous materials in commerce. It is not practicable to provide a broad exception that waives security plan requirements simply to accommodate one-time shipments of hazardous materials. Therefore, we are not adopting a procedure for one-time shipments in this final rule.

2. Modal Variations

The NPRM did not elaborate on differences in security plans based on the mode of transportation used. One commenter, Dow, suggests that security plan requirements should vary by mode of transportation because security risks will "differ due to the unique aspects of each mode."

We agree with the commenter that security risks may well differ among different modes of transport. Persons who offer for transportation materials for which a security plan is required must assess and address security vulnerabilities for all the modes of transport utilized. The HMR set forth general requirements for a security plan's components rather than a prescriptive list of specific items that must be included. The HMR set a performance standard providing offerors and carriers with the flexibility necessary to develop security plans addressing their individual circumstances and operational environments. Accordingly, each security plan will differ because it will be based on an offeror's or a carrier's individualized assessment of the security risks associated with the specific hazardous materials it ships or transports and its unique circumstances and operational environment.

In the event that additional requirements are deemed to be necessary for specific modes, we will address those through rulemaking. An example of mode specific security plan requirements is the rail routing regulation in § 172.820 of the HMR, which were adopted in an interim final rule published April 16, 2008 (73 FR 20751) and finalized in a final rule published November 26, 2008 (73 FR 72182). The section requires, for a narrow list of materials, rail carriers to collect data on rail transportation routes, analyze the data collected, assess practicable alternative routes, and select the safest and most secure route.[1]

3. Exceptions and IBCs

Three commenters ask for clarification of the applicability of the security plan requirements to materials shipped under exceptions and to residues. Commenters also asked whether security planning requirements apply to hazardous materials transported in IBCs.

The security plan requirements apply to the materials listed in § 172.800(b) as amended by this final rule. Materials shipped in accordance with an exception authorized under the HMR, such as the materials of trade exception in § 173.6, small quantity exceptions in [list the new sections as established in HM–215J], or limited quantity or consumer commodity exceptions, are not subject to security planning requirements. In accordance with § 172.800(b), listed materials offered for transportation or transported at or above the threshold quantity indicated are subject to security plan requirements, including residue quantities in excess of the established thresholds. Materials for which the established threshold is 3,000 L (793 gallons) or 3,000 kg (6,614 lbs.) that are transported in an IBC or other

[1] TSA also requires freight rail carriers and certain facilities handling specified hazardous materials to implement chain of custody and control requirements to ensure a positive and secure exchange of the specified hazardous materials. 49 CFR 1580.107.

packaging with a capacity that is below the established threshold are not subject to security planning requirements.

4. Shipper's Responsibility

Commenters express concern regarding enforcement actions taken against carriers as a result of errors made by shippers. Specifically, in its comments COSTHA requests that PHMSA add language to protect the carrier from enforcement action when a shipper fails to declare a shipment as being subject to the security plan requirement. Similarly, ATA requests the inclusion of a provision indicating that the "transportation of undeclared hazardous materials is not a violation of the HMR, unless the carrier has knowledge that a specific package contained undeclared security sensitive hazardous materials."

It is the carrier's responsibility to develop and implement security plans for materials that it transports that are in excess of the thresholds established by this final rule. We note that in accordance with § 171.2(f) of the HMR, an offeror and carrier may rely on information provided by a previous offeror or carrier unless it knows, or a reasonable person acting in the circumstances and exercising reasonable care would know, that the information provided to them is incorrect. Under section 5123(a)(1) of the Federal hazardous materials transportation law (49 U.S.C. 5101 *et seq.*), a person acts knowingly when the person has actual knowledge of the facts giving rise to the violation; or a reasonable person acting in the circumstances and exercising reasonable care would have that knowledge. While we consider enforcement actions on a case-by-case basis considering the specific circumstances surrounding non-compliance with the regulations, we can say that it is unlikely that we would pursue an enforcement action against a carrier for failure to have a security plan if the carrier relied on information about the shipment provided by a previous offeror or carrier in the transportation chain and the carrier did not know or have reason to believe that the information provided was incorrect.

5. Implementation Timeline

One commenter, Horizon Lines, Inc, suggests that the proposed changes to the security plan will require modification to plans in existence today and requests that enough time be provided for training to be completed without creating an undue burden and expense for industry.

We disagree that the proposed changes to the security plan will require modification to plans in existence today. This final rule narrows the list of materials subject to security plan requirements and provides clarity in areas where the requirements are often misunderstood (e.g., security planning, training, and documentation). This final rule, taken as a whole, reduces the number of persons subject to the regulatory costs and paperwork burden attributable to PHMSA's security planning requirements. It does not increase the training burden or require modification of existing security plans. However, we understand the concerns expressed by Horizon Lines, Inc. As such, we will allow voluntary compliance 30 days after publication of this final rule and extend the effective date to October 1, 2010. This will provide an opportunity for companies to account for any changes they may choose to implement.

## IV. Regulatory Analyses and Notices

### *A. Executive Order 12866 and DOT Regulatory Policies and Procedures*

This rulemaking is considered a significant regulatory action under section 3(f) of Executive Order 12866 and the Regulatory Policies and Procedures of the Department of Transportation (44 FR 11032). This final rule was reviewed by the Office of Management and Budget.

Executive Order 12866 requires agencies to regulate in the "most cost-effective manner," to make a "reasoned determination that the benefits of the intended regulation justify its costs," and to develop regulations that "impose the least burden on society." Because this final rule narrows the list of materials for which security plans are required, it will reduce the number of shippers and carriers required to develop security plans in accordance with Subpart I of Part 172 of the HMR. It is estimated that about 10,119 entities will no longer be subject to current security plan and associated in-depth training requirements. The annual benefit resulting from this final rule is estimated to be about $3.6 million–$2.8 million in avoided costs related to development of security plans and $0.8 million in costs savings for associated training. Evaluated over a 15-year period at the standard discount rate of 7%, the estimated net present value of the cost savings is approximately $32.6 million. The regulatory impact assessment is accessible by PHMSA docket number (PHMSA–06–25885) through the Federal eRulemaking Portal (*http://www.regulations.gov*).

### *B. Executive Order 13132*

This final rule has been analyzed in accordance with the principles and criteria set forth in Executive Order 13132 ("Federalism"). This final rule will preempt State, local and Indian tribe requirements but will not have substantial direct effects on the States, the relationship between the national government and the States, or the distribution of power and responsibilities among the various levels of government. Therefore, the consultation and funding requirements of Executive Order 13132 do not apply.

### *C. Executive Order 13175*

This final rule was analyzed in accordance with the principles and criteria set forth in Executive Order 13175 ("Consultation and Coordination with Indian Tribal Governments"). Because this final rule does not have tribal implications, and does not impose substantial direct compliance costs, the funding and consultation requirements of Executive Order 13175 do not apply.

### *D. Regulatory Flexibility Act*

The Regulatory Flexibility Act (5 U.S.C. 601 *et seq.*) requires an agency to review regulations to assess their impact on small entities unless the agency determines that a rule is not expected to have a significant impact on a substantial number of small entities. PHMSA has determined that, while the requirements of the final rule would apply to a substantial number of small entities, the economic impact on those small entities would not be substantial, though it would be positive.

As indicated above, about 10,119 entities will be provided relief from current security plan and in-depth training requirements as a result of this final rule. These entities are persons who offer for transportation or transport hazardous materials in commerce. Unless alternative definitions have been established by the agency in consultation with the Small Business Administration (SBA), the definition of "small business" has the same meaning as under the Small Business Act. Since no such special definition has been established, the thresholds published by SBA for industries subject to the HMR are utilized. Fewer than 90% of shippers and carriers affected by the changes in this final rule are small businesses.

Based on an analysis of the potential reduction in cost associated with this final rule, PHMSA concludes that, while the rule applies to a substantial number of small entities, it does not have a significant economic impact on those

small entities. For a small business that will no longer be subject to the security plan requirements and associated in-depth training requirements, the cost savings is between $332 and $437 annually.

*E. Paperwork Reduction Act*

PHMSA currently has an approved information collection under OMB Control Number 2137–0612, "Hazardous Materials Security Plans" with an expiration date of June 30, 2011. This final rule will result in a decrease in the annual burden and costs under OMB Control Number 2137–0612 due to changes adopted in this final rule to revise the list of materials for which hazardous materials transportation security plans are required.

Under the Paperwork Reduction Act of 1995, no person is required to respond to an information collection unless it has been approved by OMB and displays a valid OMB control number. Pursuant to 5 CFR 1320.8(d), PHMSA is required to provide interested members of the public and affected agencies with an opportunity to comment on information collection and recordkeeping requests. This final rule identifies a revised information collection request that PHMSA will submit to the Office of Management and Budget (OMB) for approval based on the requirements in this final rule.

PHMSA has developed burden estimates to reflect changes in this final rule and estimates that the information collection and recordkeeping burden in this rule would be decreased as follows:

OMB Control No. 2137–0612:

*Decrease in Annual Number of Respondents:* 10,119

*Decrease in Annual Responses:* 10,119

*Decrease in Annual Burden Hours:* 55,655

*Decrease in Annual Burden Costs:* $2,782,750

Requests for a copy of this information collection should be directed to Deborah Boothe or T. Glenn Foster, Office of Hazardous Materials Standards (PHH–11), Pipeline and Hazardous Materials Safety Administration, 1200 New Jersey Avenue, SE., Washington, DC 20590–0001, Telephone (202) 366–8553.

*F. Regulation Identifier Number (RIN)*

A regulation identifier number (RIN) is assigned to each regulatory action listed in the Unified Agenda of Federal Regulations. The Regulatory Information Service Center publishes the Unified Agenda in April and October of each year. The RIN contained in the heading of this document can be used to cross-reference this action with the Unified Agenda.

*G. Unfunded Mandates Reform Act*

This final rule does not impose unfunded mandates under the Unfunded Mandates Reform Act of 1995. It does not result in costs of $132 million or more to either State, local or tribal governments, in the aggregate, or to the private sector, and is the least burdensome alternative that achieves the objective of the rule.

*H. Environmental Assessment*

The National Environmental Policy Act (NEPA), sections 4321–4375, requires Federal agencies to analyze proposed actions to determine whether the action will have a significant impact on the human environment. The Council on Environmental Quality (CEQ) regulations order Federal agencies to conduct an environmental review considering (1) the need for the proposed action, (2) alternatives to the proposed action, (3) probable environmental impacts of the proposed action and alternatives, and (4) the agencies and persons consulted during the consideration process. 40 CFR 1508.9(b).

*Purpose and Need.* The current security plan requirements, which became effective on September 25, 2003, apply to shipments of placarded loads of hazardous materials and to select agents. PHMSA has received two petitions for rulemaking requesting a review and reevaluation of the requirements. The petitioners cite several examples of hazardous materials that, based on hazard class and quantity, require placarding under the HMR and, therefore, are subject to security plan requirements. Examples include automobile batteries, inks, paint, and flavoring extracts. Petitioners suggest that it is highly unlikely a terrorist would use such materials to cause loss of life, destruction of property, or damage to the environment.

PHMSA agrees with the petitioners that the list of materials for which security plans are required should be revised. Since 2003, both the industry and the government have had four years of experience in evaluating security risks associated with specific hazardous materials and transportation environments and identifying appropriate measures to address those risks. The revisions made by this final rule are based on an evaluation of possible security threats posed by specific types and classes of hazardous materials and are intended to ensure that the security plan requirement applies only to those materials that present a significant security threat in transportation based on the hazard class and packing group of the material and the quantity or volume transported.

*Alternatives.* PHMSA considered the following alternatives:

*No action*—Under this alternative, security plan requirements would continue to apply to shipments of placarded loads of hazardous materials and to select agents, including some materials that do not pose a transportation security risk. This alternative is not risk-based and results in the over-regulation of materials that are not likely to be used in a terrorist or criminal act. This action is not recommended.

*Require security plans only for materials subject to FMCSA permit regulations*—Under this alternative, security plan requirements would apply only to shipments of hazardous materials subject to safety permit requirements in accordance with FMCSA regulations at 49 CFR Part 385. A safety permit is required for certain shipments of radioactive materials, explosives, PIH materials, and compressed or refrigerated methane or liquefied natural gas. This alternative would not include a number of materials that pose a significant security risk, including flammable gases, flammable liquids, desensitized explosives, dangerous when wet materials, oxidizing materials, organic peroxides, poisons, and select agents. Selection of this alternative could result in significant adverse environmental impacts as a result of a terrorist or criminal action using such materials. This alternative is not recommended.

*Adopt UN Recommendations Criteria for Security Plan Requirements*—under this alternative, security plans would be required for the materials identified in the UN Recommendations as high consequence dangerous goods—that is, materials with the potential for misuse in a terrorist incident that may produce serious consequences such as mass casualties or mass destruction. The UN list of high consequence dangerous goods includes most of the hazardous materials that pose a significant transportation security risk. The materials that would no longer be subject to security planning requirements are unlikely to be targeted for criminal or terrorist use; therefore, the adverse environmental consequences of this alternative are expected to be minimal. With some modifications, as detailed in this final rule, this is the selected alternative.

*Analysis of Environmental Impacts.* Hazardous materials are substances that may pose a threat to public safety or the

environment during transportation because of their physical, chemical, or nuclear properties. The hazardous material regulatory system is a risk management system that is prevention-oriented and focused on identifying a safety hazard and reducing the probability and quantity of a hazardous material release. Hazardous materials are categorized by hazard analysis and experience into hazard classes and packing groups. The regulations require each shipper to classify a material in accordance with these hazard classes and packing groups; the process of classifying a hazardous material is itself a form of hazard analysis. Further, the regulations require the shipper to communicate the material's hazards through use of the hazard class, packing group, and proper shipping name on the shipping paper and the use of labels on packages and placards on transport vehicles. Thus the shipping paper, labels, and placards communicate the most significant findings of the shipper's hazard analysis. A hazardous material is assigned to one of three packing groups based upon its degree of hazard—from a high hazard Packing Group I to a low hazard Packing Group III material. The quality, damage resistance, and performance standards of the packaging in each packing group are appropriate for the hazards of the material transported.

Releases of hazardous materials, whether caused by accident or deliberate sabotage, can result in explosions or fires. Radioactive, toxic, infectious, or corrosive hazardous materials can have short or long term exposure effects on humans or the environment. Generally, however, the hazard class definitions are focused on the potential safety hazards associated with a given material or type of material rather than the environmental hazards of such materials.

Under the HMR, hazardous materials may be transported by aircraft, vessel, rail, and highway. The potential for environmental damage or contamination exists when packages of hazardous materials are involved in accidents or en route incidents resulting from cargo shifts, valve failures, package failures, loading, unloading, collisions, handling problems, or deliberate sabotage. The release of hazardous materials can cause the loss of ecological resources and the contamination of air, aquatic environments, and soil. Contamination of soil can lead to the contamination of ground water. For the most part, the adverse environmental impacts associated with releases of most hazardous materials are short-term impacts that can be reduced or eliminated through prompt clean-up/decontamination of the accident scene.

The security plan requirements in Subpart I of Part 172 of the HMR are intended to reduce the potentially catastrophic consequences, including adverse environmental consequences, of a criminal or terrorist incident involving hazardous materials in transportation. A security plan must include an assessment of possible transportation security risks and appropriate measures to address the assessed risks. Specific measures implemented as part of the plan may vary with the level of threat at a particular time. At a minimum, the security plan must address personnel security, unauthorized access, and en route security. For personnel security, the plan must include measures to confirm information provided by job applicants for positions involving access to and handling of the hazardous materials covered by the plan. For unauthorized access, the plan must include measures to address the risk of unauthorized persons gaining access to materials or transport conveyances being prepared for transportation. For en route security, the plan must include measures to address security risks during transportation, including the security of shipments stored temporarily en route to their destinations.

This final rule narrows the list of materials for which a security plan is currently required. It targets the security plan regulations to those materials that pose a significant transportation security risk. It is possible to envision scenarios in which hazardous materials other than those identified in this final rule could be used to inflict serious damage in a terrorist or criminal incident. However, our assessment of the security risks associated with such materials, detailed elsewhere in this preamble, suggests that they are unlikely to be targeted. PHMSA therefore concludes that there are no significant environmental impacts associated with this final rule.

*Consultation and Public Comment.* As discussed above, PHMSA published an ANPRM and hosted a public meeting to solicit public comments concerning whether the list of materials for which security plans are currently required should be modified. Commenters were asked to address a number of issues related to the identification of materials that pose a security threat sufficient to justify preparation and implementation of a security plan. Thirty-four comments were received from industry associations, shippers, carriers, and private citizens. In addition, six people made presentations at the public meeting.

**List of Subjects in 49 CFR Part 172**

Hazardous materials transportation, Hazardous waste, Labeling, Packaging and containers, Reporting and recordkeeping requirements.

■ In consideration of the foregoing, PHMSA is amending title 49 Chapter I, Subchapter C, as follows:

## PART 172—HAZARDOUS MATERIALS TABLE, SPECIAL PROVISIONS, HAZARDOUS MATERIALS COMMUNICATIONS, EMERGENCY RESPONSE INFORMATION, AND TRAINING REQUIREMENTS

■ 1. The authority citation for part 172 continues to read as follows:

**Authority:** 49 U.S.C. 5101–5128, 44701; 49 CFR 1.53.

■ 2. In § 172.704, paragraphs (a)(5), and (c)(2) are revised to read as follows:

### § 172.704 Training requirements.

(a) * * *

(5) *In-depth security training.* Each hazmat employee of a person required to have a security plan in accordance with subpart I of this part who handles hazardous materials covered by the plan, performs a regulated function related to the hazardous materials covered by the plan, or is responsible for implementing the plan must be trained concerning the security plan and its implementation. Security training must include company security objectives, organizational security structure, specific security procedures, specific security duties and responsibilities for each employee, and specific actions to be taken by each employee in the event of a security breach.

* * * * *

(c) * * *

(2) *Recurrent training.* A hazmat employee must receive the training required by this subpart at least once every three years. For in-depth security training required under paragraph (a)(5) of this section, a hazmat employee must be trained at least once every three years or, if the security plan for which training is required is revised during the three-year recurrent training cycle, within 90 days of implementation of the revised plan.

* * * * *

■ 3. In § 172.800, paragraph (b) is revised to read as follows:

### § 172.800 Purpose and applicability.

* * * * *

(b) *Applicability.* Each person who offers for transportation in commerce or transports in commerce one or more of the following hazardous materials must

develop and adhere to a transportation security plan for hazardous materials that conforms to the requirements of this subpart. As used in this section, "large bulk quantity" refers to a quantity greater than 3,000 kg (6,614 pounds) for solids or 3,000 liters (792 gallons) for liquids and gases in a single packaging such as a cargo tank motor vehicle, portable tank, tank car, or other bulk container.

(1) Any quantity of a Division 1.1, 1.2, or 1.3 material;

(2) A quantity of a Division 1.4, 1.5, or 1.6 material requiring placarding in accordance with § 172.504(c);

(3) A large bulk quantity of Division 2.1 material;

(4) A large bulk quantity of Division 2.2 material with a subsidiary hazard of 5.1;

(5) Any quantity of a material poisonous by inhalation, as defined in § 171.8 of this subchapter;

(6) A large bulk quantity of a Class 3 material meeting the criteria for Packing Group I or II;

(7) A quantity of a desensitized explosives meeting the definition of a Division 4.1 or Class 3 material requiring placarding in accordance with § 172.504(c);

(8) A large bulk quantity of a Division 4.2 material meeting the criteria for Packing Group I or II;

(9) Any quantity of a Division 4.3 material;

(10) A large bulk quantity of a Division 5.1 material in Packing Groups I and II; perchlorates; or ammonium nitrate, ammonium nitrate fertilizers, or ammonium nitrate emulsions, suspensions, or gels;

(11) Any quantity of organic peroxide, Type B, liquid or solid, temperature controlled;

(12) A large bulk quantity of Division 6.1 material (for a material poisonous by inhalation see paragraph (5) above);

(13) A select agent or toxin regulated by the Centers for Disease Control and Prevention under 42 CFR part 73 or the United States Department of Agriculture under 9 CFR part 121;

(14) A quantity of uranium hexafluoride requiring placarding under § 172.505(b);

(15) International Atomic Energy Agency (IAEA) Code of Conduct Category 1 and 2 materials including Highway Route Controlled quantities as defined in 49 CFR 173.403 or known as radionuclides in forms listed as RAM–QC by the Nuclear Regulatory Commission;

(16) A large bulk quantity of Class 8 material meeting the criteria for Packing Group I.

* * * * *

■ 4. In § 172.802, revise paragraph (a) introductory text, redesignate paragraph (b) as paragraph (c) and revise it, and add new paragraphs (b) and (d), to read as follows:

**§ 172.802 Components of a security plan.**

(a) The security plan must include an assessment of transportation security risks for shipments of the hazardous materials listed in § 172.800, including site-specific or location-specific risks associated with facilities at which the hazardous materials listed in § 172.800 are prepared for transportation, stored, or unloaded incidental to movement, and appropriate measures to address the assessed risks. Specific measures put into place by the plan may vary commensurate with the level of threat at a particular time. At a minimum, a security plan must include the following elements:

* * * * *

(b) The security plan must also include the following:

(1) Identification by job title of the senior management official responsible for overall development and implementation of the security plan;

(2) Security duties for each position or department that is responsible for implementing the plan or a portion of the plan and the process of notifying employees when specific elements of the security plan must be implemented; and

(3) A plan for training hazmat employees in accordance with § 172.704 (a)(4) and (a)(5) of this part.

(c) The security plan, including the transportation security risk assessment developed in accordance with paragraph (a) of this section, must be in writing and must be retained for as long as it remains in effect. The security plan must be reviewed at least annually and revised and/or updated as necessary to reflect changing circumstances. The most recent version of the security plan, or portions thereof, must be available to the employees who are responsible for implementing it, consistent with personnel security clearance or background investigation restrictions and a demonstrated need to know. When the security plan is updated or revised, all employees responsible for implementing it must be notified and all copies of the plan must be maintained as of the date of the most recent revision.

(d) Each person required to develop and implement a security plan in accordance with this subpart must maintain a copy of the security plan (or an electronic file thereof) that is accessible at, or through, its principal place of business and must make the security plan available upon request, at a reasonable time and location, to an authorized official of the Department of Transportation or the Department of Homeland Security.

Issued in Washington, DC, on March 1, 2010, under authority delegated in 49 CFR Part 1.

**Cynthia L. Quarterman,**

*Administrator.*

[FR Doc. 2010–4778 Filed 3–8–10; 8:45 am]

BILLING CODE 4910–60–P

# Reader Aids

**Federal Register**

Vol. 75, No. 45

Tuesday, March 9, 2010

## CUSTOMER SERVICE AND INFORMATION

| | |
|---|---|
| **Federal Register/Code of Federal Regulations** | |
| General Information, indexes and other finding aids | **202–741–6000** |
| **Laws** | **741–6000** |
| **Presidential Documents** | |
| Executive orders and proclamations | **741–6000** |
| **The United States Government Manual** | **741–6000** |
| **Other Services** | |
| Electronic and on-line services (voice) | **741–6020** |
| Privacy Act Compilation | **741–6064** |
| Public Laws Update Service (numbers, dates, etc.) | **741–6043** |
| TTY for the deaf-and-hard-of-hearing | **741–6086** |

## ELECTRONIC RESEARCH

### World Wide Web

Full text of the daily Federal Register, CFR and other publications is located at: **http://www.gpoaccess.gov/nara/index.html**

Federal Register information and research tools, including Public Inspection List, indexes, and links to GPO Access are located at: **http://www.archives.gov/federal__register**

### E-mail

**FEDREGTOC-L** (Federal Register Table of Contents LISTSERV) is an open e-mail service that provides subscribers with a digital form of the Federal Register Table of Contents. The digital form of the Federal Register Table of Contents includes HTML and PDF links to the full text of each document.

To join or leave, go to **http://listserv.access.gpo.gov** and select *Online mailing list archives, FEDREGTOC-L, Join or leave the list (or change settings);* then follow the instructions.

**PENS** (Public Law Electronic Notification Service) is an e-mail service that notifies subscribers of recently enacted laws.

To subscribe, go to **http://listserv.gsa.gov/archives/publaws-l.html** and select *Join or leave the list (or change settings);* then follow the instructions.

**FEDREGTOC-L** and **PENS** are mailing lists only. We cannot respond to specific inquiries.

**Reference questions.** Send questions and comments about the Federal Register system to: **fedreg.info@nara.gov**

The Federal Register staff cannot interpret specific documents or regulations.

**Reminders.** Effective January 1, 2009, the Reminders, including Rules Going Into Effect and Comments Due Next Week, no longer appear in the Reader Aids section of the Federal Register. This information can be found online at **http://www.regulations.gov.**

**CFR Checklist.** Effective January 1, 2009, the CFR Checklist no longer appears in the Federal Register. This information can be found online at **http://bookstore.gpo.gov/.**

## FEDERAL REGISTER PAGES AND DATE, MARCH

9085–9326 ..... 1
9327–9514 ..... 2
9515–9752 ..... 3
9753–10158 ..... 4
10159–10408 ..... 5
10409–10630 ..... 8
10631–10990 ..... 9

## CFR PARTS AFFECTED DURING MARCH

At the end of each month, the Office of the Federal Register publishes separately a List of CFR Sections Affected (LSA), which lists parts and sections affected by documents published since the revision date of each title.

**3 CFR**

**Proclamations:**
8478 ..... 9325
8479 ..... 10159
8480 ..... 10161
8481 ..... 10631

**Executive Orders:**
13394 (revoked by 13533) ..... 10163
13532 ..... 9749
13533 ..... 10163

**Administrative Orders:**
Notices:
Notice of February 26, 2010 ..... 10157

**6 CFR**

5 ..... 9085, 10633

**7 CFR**

354 ..... 10634
966 ..... 10409
1000 ..... 10122
1001 ..... 10122
1005 ..... 10122
1006 ..... 10122
1007 ..... 10122
1030 ..... 10122
1032 ..... 10122
1033 ..... 10122
1124 ..... 10122
1126 ..... 10122
1131 ..... 10122
1580 ..... 9087

**Proposed Rules:**
923 ..... 10442
932 ..... 9536
3550 ..... 10194

**9 CFR**

53 ..... 10645
56 ..... 10645
145 ..... 10645
146 ..... 10645
147 ..... 10645

**10 CFR**

50 ..... 10410
431 ..... 10874, 10950

**Proposed Rules:**
73 ..... 10444
431 ..... 9120

**12 CFR**

201 ..... 9093
617 ..... 10411

**Proposed Rules:**
205 ..... 9120
230 ..... 9126
906 ..... 10446
1207 ..... 10446

**13 CFR**

**Proposed Rules:**
121 ..... 9129, 10030
124 ..... 9129
125 ..... 9129
126 ..... 9129
127 ..... 10030
134 ..... 9129, 10030

**14 CFR**

1 ..... 9095
21 ..... 9095
39 ..... 9515, 9753, 9756, 9760, 10658, 10664, 10667, 10669
43 ..... 9095
45 ..... 9095
61 ..... 9763
63 ..... 9763
65 ..... 9763
91 ..... 9327
97 ..... 9095, 9098

**Proposed Rules:**
39 ..... 9137, 9140, 9809, 9811, 9814, 9816, 10694, 10696, 10701
71 ..... 9538

**15 CFR**

**Proposed Rules:**
801 ..... 10704

**16 CFR**

610 ..... 9726

**Proposed Rules:**
322 ..... 10707

**17 CFR**

249 ..... 9100
270 ..... 10060
274 ..... 10060

**19 CFR**

12 ..... 10411

**Proposed Rules:**
113 ..... 9359
191 ..... 9359

**20 CFR**

655 ..... 10396

**Proposed Rules:**
404 ..... 9821
416 ..... 9821

**21 CFR**

333 ..... 9767
514 ..... 10413
520 ..... 10165
522 ..... 9333, 10165
524 ..... 10165
526 ..... 10165
558 ..... 9334
1301 ..... 10671

1303 ....10671
1304 ....10671
1307 ....10671
1308 ....10671
1309 ....10671
1310 ....10671
1312 ....10671
1313 ....10168, 10671
1314 ....10671
1315 ....10671
1316 ....10671
1321 ....10671

**26 CFR**

1 ....9101, 10172
**Proposed Rules:**
1 ....9141, 9142
31 ....9142
301 ....9142

**27 CFR**

**Proposed Rules:**
9 ....9827, 9831
28 ....9359
44 ....9359

**28 CFR**

2 ....9516
43 ....9102
**Proposed Rules:**
545 ....9544

**29 CFR**

2520 ....9334
**Proposed Rules:**
1904 ....10738
1910 ....10739
2550 ....9360

**32 CFR**

706 ....10413
**Proposed Rules:**
157 ....9548
240 ....9142

**33 CFR**

117 ....9521, 10172
165 ....10687
401 ....10688
**Proposed Rules:**
117 ....9557
165 ....9370, 10195, 10446

**34 CFR**

280 ....9777

**36 CFR**

1254 ....10414

**39 CFR**

111 ....9343
121 ....9343
3020 ....9523

**40 CFR**

49 ....10174
52 ....9103, 10182, 10415, 10416, 10420, 10690
55 ....9780
63 ....9648, 10184
70 ....9106
80 ....9107
81 ....9781
180 ....9527, 10186
271 ....9345
300 ....9782, 9790
450 ....10438
**Proposed Rules:**
52 ....9146, 9373, 9834, 10198, 10449
70 ....9147
300 ....9843

**44 CFR**

64 ....9111
**Proposed Rules:**
67 ....9561

**47 CFR**

1 ....9797
2 ....10439
15 ....9113
73 ....9114, 9530, 9797, 10692
74 ....9113
76 ....9692
80 ....10692
**Proposed Rules:**
15 ....9850
54 ....10199
73 ....9856, 9859

**48 CFR**

217 ....9114, 10190
237 ....10191
252 ....10191
Ch. 13 ....10568
**Proposed Rules:**
204 ....9563
252 ....9563
1809 ....9860
1827 ....9860
1837 ....9860
1852 ....9860

**49 CFR**

172 ....10974
**Proposed Rules:**
71 ....9568
172 ....9147
173 ....9147
175 ....9147
395 ....9376
575 ....10740

**50 CFR**

10 ....9282
21 ....9314, 9316
600 ....9531
622 ....9116, 10693
679 ....9358, 9534, 10441
**Proposed Rules:**
17 ....9377
622 ....9864
648 ....10450

## LIST OF PUBLIC LAWS

This is a continuing list of public bills from the current session of Congress which have become Federal laws. It may be used in conjunction with "P L U S" (Public Laws Update Service) on 202–741–6043. This list is also available online at *http://www.archives.gov/federal-register/laws.html*.

The text of laws is not published in the **Federal Register** but may be ordered in "slip law" (individual pamphlet) form from the Superintendent of Documents, U.S. Government Printing Office, Washington, DC 20402 (phone, 202–512–1808). The text will also be made available on the Internet from GPO Access at *http://www.gpoaccess.gov/plaws/index.html*. Some laws may not yet be available.

**H.R. 1299/P.L. 111–145**
United States Capitol Police Administrative Technical Corrections Act of 2009 (Mar. 4, 2010; 124 Stat. 49)
**Last List March 4, 2010**

## Public Laws Electronic Notification Service (PENS)

**PENS** is a free electronic mail notification service of newly enacted public laws. To subscribe, go to *http://listserv.gsa.gov/archives/publaws-l.html*

**Note:** This service is strictly for E-mail notification of new laws. The text of laws is not available through this service. **PENS** cannot respond to specific inquiries sent to this address.