AUTHENTICATED
U.S. GOVERNMENT
INFORMATION
GPO

Federal Register

1–11–10 Monday
Vol. 75 No. 6 Jan. 11, 2010

Pages 1269–1524

The **FEDERAL REGISTER** (ISSN 0097–6326) is published daily, Monday through Friday, except official holidays, by the Office of the Federal Register, National Archives and Records Administration, Washington, DC 20408, under the Federal Register Act (44 U.S.C. Ch. 15) and the regulations of the Administrative Committee of the Federal Register (1 CFR Ch. I). The Superintendent of Documents, U.S. Government Printing Office, Washington, DC 20402 is the exclusive distributor of the official edition. Periodicals postage is paid at Washington, DC.

The **FEDERAL REGISTER** provides a uniform system for making available to the public regulations and legal notices issued by Federal agencies. These include Presidential proclamations and Executive Orders, Federal agency documents having general applicability and legal effect, documents required to be published by act of Congress, and other Federal agency documents of public interest.

Documents are on file for public inspection in the Office of the Federal Register the day before they are published, unless the issuing agency requests earlier filing. For a list of documents currently on file for public inspection, see *www.federalregister.gov.*

The seal of the National Archives and Records Administration authenticates the Federal Register as the official serial publication established under the Federal Register Act. Under 44 U.S.C. 1507, the contents of the **Federal Register** shall be judicially noticed.

The **Federal Register** is published in paper and on 24x microfiche. It is also available online at no charge as one of the databases on GPO Access, a service of the U.S. Government Printing Office.

The online edition of the **Federal Register**, *www.gpoaccess.gov/nara,* available through GPO Access, is issued under the authority of the Administrative Committee of the Federal Register as the official legal equivalent of the paper and microfiche editions (44 U.S.C. 4101 and 1 CFR 5.10). It is updated by 6 a.m. each day the **Federal Register** is published and includes both text and graphics from Volume 59, Number 1 (January 2, 1994) forward.

For more information about GPO Access, contact the GPO Access User Support Team, call toll free 1-888-293-6498; DC area 202-512-1530; fax at 202-512-1262; or via e-mail at *gpoaccess@gpo.gov.* The Support Team is available between 7:00 a.m. and 9:00 p.m. Eastern Time, Monday–Friday, except official holidays.

The annual subscription price for the **Federal Register** paper edition is $749 plus postage, or $808, plus postage, for a combined **Federal Register, Federal Register** Index and List of CFR Sections Affected (LSA) subscription; the microfiche edition of the **Federal Register** including the **Federal Register** Index and LSA is $165, plus postage. Six month subscriptions are available for one-half the annual rate. The prevailing postal rates will be applied to orders according to the delivery method requested. The price of a single copy of the daily **Federal Register,** including postage, is based on the number of pages: $11 for an issue containing less than 200 pages; $22 for an issue containing 200 to 400 pages; and $33 for an issue containing more than 400 pages. Single issues of the microfiche edition may be purchased for $3 per copy, including postage. Remit check or money order, made payable to the Superintendent of Documents, or charge to your GPO Deposit Account, VISA, MasterCard, American Express, or Discover. Mail to: U.S. Government Printing Office—New Orders, P.O. Box 979050, St. Louis, MO 63197-9000; or call toll free 1-866-512-1800, DC area 202-512-1800; or go to the U.S. Government Online Bookstore site, see *bookstore.gpo.gov.*

There are no restrictions on the republication of material appearing in the **Federal Register.**

How To Cite This Publication: Use the volume number and the page number. Example: 75 FR 12345.

Postmaster: Send address changes to the Superintendent of Documents, Federal Register, U.S. Government Printing Office, Washington, DC 20402, along with the entire mailing label from the last issue received.

SUBSCRIPTIONS AND COPIES

PUBLIC

Subscriptions:

Paper or fiche	**202–512–1800**
Assistance with public subscriptions	**202–512–1806**

General online information **202–512–1530; 1–888–293–6498**

Single copies/back copies:

Paper or fiche	**202–512–1800**
Assistance with public single copies	**1–866–512–1800 (Toll-Free)**

FEDERAL AGENCIES

Subscriptions:

Paper or fiche	**202–741–6005**
Assistance with Federal agency subscriptions	**202–741–6005**

Printed on recycled paper.

Contents

Federal Register

Vol. 75, No. 6

Monday, January 11, 2010

Agricultural Marketing Service
RULES
Dried Prunes Produced in California; Decreased Assessment Rate, 1269–1271
Vegetable Import Regulations:
Modification of Potato Import Regulations; Correction, 1269

Agriculture Department
See Agricultural Marketing Service
See Forest Service

Army Department
See Engineers Corps

Blind or Severely Disabled, Committee for Purchase From People Who Are
See Committee for Purchase From People Who Are Blind or Severely Disabled

Commerce Department
See Economic Development Administration
See Industry and Security Bureau
See International Trade Administration
See National Oceanic and Atmospheric Administration
See National Telecommunications and Information Administration

Committee for Purchase From People Who Are Blind or Severely Disabled
NOTICES
Procurement List; Additions and Deletions, 1354–1356

Consumer Product Safety Commission
NOTICES
Provisional Acceptance of a Settlement Agreement and Order:
RC2 Corp., 1356–1359

Corporation for National and Community Service
NOTICES
Agency Information Collection Activities; Proposals, Submissions, and Approvals, 1359

Defense Department
See Engineers Corps

Department of Transportation
See Pipeline and Hazardous Materials Safety Administration

Economic Development Administration
NOTICES
Solicitation of Applications:
Community Trade Adjustment Assistance Program, 1345–1354

Education Department
NOTICES
Agency Information Collection Activities; Proposals, Submissions, and Approvals, 1359–1361

Energy Department
See Federal Energy Regulatory Commission
See Southwestern Power Administration
NOTICES
Meetings:
Environmental Management Site-Specific Advisory Board, Northern New Mexico, 1361

Engineers Corps
NOTICES
Environmental Impact Statements; Availability, etc.:
Construction of Western Wake Regional Wastewater Management Facilities, etc., Apex, Cary, Holly Springs and Morrisville, et al., NC, 1359

Environmental Protection Agency
RULES
Revisions to the California State Implementation Plan:
Ventura County Air Pollution Control District, 1284–1285
NOTICES
Beaches Environmental Assessment and Coastal Health Act; Availability of 2010 BEACH Act Grants, 1373–1379
Meetings:
Clean Air Act Advisory Committee, 1379–1380
Clean Air Scientific Advisory Committee Ozone Review Panel for the Reconsideration of the 2008 NAAQS, 1381–1382
National Drinking Water Advisory Council's Climate Ready Water Utilities Working Group, 1380–1381

Federal Aviation Administration
PROPOSED RULES
Airworthiness Directives:
Boeing Model 737–600, –700, –700C, –800, –900, and –900ER Series Airplanes, 1297–1301
NOTICES
Noise Compatability Program Update and Request for Review:
Modesto City County Airport, Modesto, CA; Correction, 1447

Federal Communications Commission
RULES
Vehicle-Mounted Earth Stations, 1285–1287
NOTICES
Agency Information Collection Activities; Proposals, Submissions, and Approvals, 1382
Wireless Telecommunications Bureau Seeks Comment on Petition for Reconsideration or Clarification:
Commission's Declaratory Ruling Clarifying Provisions in Section 332(c)(7) of Communications Act, 1382–1383

Federal Energy Regulatory Commission
NOTICES
Applications:
Medical Area Total Energy Plant, Inc. and New MATEP Inc., 1362
Filings:
Anaheim, CA and the California Independent System Operator Corp., 1362–1363
Riverside, CA and California Independent System Operator Corp., 1363

WM Renewable Energy, L.L.C., 1362
Initial Market-Based Rate Filings:
Dynegy Services Plum Point LLC, 1363
Records Governing Off-the-Record Communications, 1372–1373

Federal Housing Finance Agency
PROPOSED RULES
Minority and Women Inclusion, 1289–1296

Federal Housing Finance Board
PROPOSED RULES
Minority and Women Inclusion, 1289–1296

Federal Motor Carrier Safety Administration
NOTICES
Qualification of Drivers; Exemption Applications; Diabetes, 1449–1450
Qualification of Drivers; Exemption Applications; Vision, 1450–1452
Qualification of Drivers; Exemption Renewals; Vision, 1453–1454

Federal Reserve System
NOTICES
Formations of, Acquisitions by, and Mergers of Bank Holding Companies, 1384
Proposals to Engage in Permissible Nonbanking Activities or to Acquire Companies that are Engaged in Permissible Nonbanking Activities, 1384

Fish and Wildlife Service
NOTICES
Environmental Impact Statements; Availability, etc.:
Kenai National Wildlife Refuge, Soldotna, AK; Record of Decision, 1404–1405

Food and Drug Administration
RULES
Implantation or Injectable Dosage Form New Animal Drugs:
Florfenicol and Flunixin, 1274–1275
Hyaluronate Sodium, 1274
New Animal Drugs:
Ractopamine, 1275–1276
NOTICES
Meetings:
Cardiovascular and Renal Drugs Advisory Committee, 1395–1396
General and Plastic Surgery Devices Panel of the Medical Devices Advisory Committee; Amendment, 1395
General Hospital and Personal Use Devices Panel of the Medical Devices Advisory Committee, 1396–1397

Forest Service
NOTICES
New Fee Site, 1333

Health and Human Services Department
See Food and Drug Administration
See Health Resources and Services Administration
See Indian Health Service
See National Institutes of Health

Health Resources and Services Administration
NOTICES
Meetings:
National Advisory Council on Migrant Health, 1397

Housing and Urban Development Department
NOTICES
Buy American Exceptions under the American Recovery and Reinvestment Act (of 2009), 1401
Environmental Impact Statements; Availability, etc.:
Baldwin Hills Crenshaw Plaza Redevelopment Project; Los Angeles, Los Angeles County, CA, 1401–1403

Indian Affairs Bureau
NOTICES
Meetings:
Tribal Consultation on Proposed Revisions (to 25 CFR Parts 81 & 82), 1407
Tribal Consultation on Proposed Revisions (to 25 CFR Parts 81 & 82); Correction, 1407–1408

Indian Health Service
NOTICES
Funding Opportunity:
Indian Health Professions Preparatory, Pregraduate, and Scholarship Programs, 1384–1389
FY 2010 Special Diabetes Program for Indians Community–Directed Grant Program, 1389–1395

Industry and Security Bureau
NOTICES
Meetings:
Information Systems Technical Advisory Committee, 1339
Sensors and Instrumentation Technical Advisory Committee, 1339

Interior Department
See Fish and Wildlife Service
See Indian Affairs Bureau
See Land Management Bureau
See Minerals Management Service
See National Park Service
See Reclamation Bureau

Internal Revenue Service
PROPOSED RULES
Damages Received on Account of Personal Physical Injuries or Physical Sickness; Hearing, 1301

International Trade Administration
NOTICES
Antidumping or Countervailing Duty Order, Finding, or Suspended Investigation; Opportunity to Request Administrative Review, 1333–1335
Export Trade Certificate of Review, 1335
Extension of Time Limit for Preliminary Results of Antidumping Duty Administrative Review:
Circular Welded Carbon Steel Pipes and Tubes from Taiwan, 1335–1336
Final Results of Antidumping Duty Administrative Review:
First Administrative Review of Certain Polyester Staple Fiber from the People's Republic of China, 1336–1338
Preliminary Results of Antidumping Duty Administrative Review and Rescission in Part:
Hand Trucks and Certain Parts from the People's Republic of China, 1339–1344
Preliminary Results of Countervailing Duty Administrative Review:
Hot-Rolled Carbon Steel Flat Products from India, 1496–1524

Justice Department
NOTICES
Agency Information Collection Activities; Proposals, Submissions, and Approvals, 1409–1412
Consent Decrees:
U.S. v. Mascot Mines, Inc., et al.,, 1413–1414
United States District Court for the District of Idaho in United States v. Union Pacific Railroad Co., 1412
United States v. Anderson & Sons, Inc., 1412–1413
United States v. Highview Gardens, Inc., 1412
United States v. Louis Vinagro Jr., 1413

Labor Department
NOTICES
Agency Information Collection Activities; Proposals, Submissions, and Approvals, 1414–1416

Land Management Bureau
NOTICES
Agency Information Collection Activities; Proposals, Submissions, and Approvals, 1403–1404
Filing of Plats of Survey:
Idaho, 1406–1407
Record of Decision:
Lincoln County Land Act Groundwater Development and Utility Right-of-Way Project, NV, 1408–1409

Minerals Management Service
RULES
Requirements for Subsurface Safety Valve Equipment, 1276–1280

National Highway Traffic Safety Administration
NOTICES
Petition for Exemption from the Vehicle Theft Prevention Standard:
Hyundia–Kia America Technical Center, Inc., 1447–1449

National Institutes of Health
NOTICES
Meetings:
Center for Scientific Review, 1397–1401

National Oceanic and Atmospheric Administration
PROPOSED RULES
Implementation of Regional Fishery Management Organizations' Measures:
Vessels Engaged in Illegal, Unregulated, and Unreported Fishing Activities, 1324–1332

National Park Service
NOTICES
Denali National Park and Preserve Aircraft Overflights Advisory Council; Renewal, 1404
Environmental Impact Statements; Availability, etc.:
Jefferson National Expansion Memorial, Missouri; Record of Decision
Record of Decision for the General Management Plan/ Environmental Impact Statement for the Jefferson National Expansion Memorial, Missouri, 1405–1406
National Mall and Memorial Parks, Washington, D.C., 1406

National Telecommunications and Information Administration
NOTICES
Meetings:
Online Safety and Technology Working Group, 1338–1339

Nuclear Regulatory Commission
NOTICES
Final Memorandum of Understanding Between U.S. Nuclear Regulatory Commission and North American Electric Reliability Corp., 1416–1418
Implementation of Open Government Directive, 1418–1420

Pipeline and Hazardous Materials Safety Administration
PROPOSED RULES
Hazardous Materials:
Transportation of Lithium Batteries, 1302–1324

Postal Regulatory Commission
RULES
New Postal Product, 1280–1284
PROPOSED RULES
Periodic Reporting, 1301–1302

Reclamation Bureau
NOTICES
Pick–Sloan Missouri Basin Program, Eastern and Western Division Proposed Project Use Power Rate, 1408

Securities and Exchange Commission
RULES
Commission Guidance Regarding Independent Public Accountant Engagements Performed, etc.:
Interpretation, 1492–1494
Custody of Funds or Securities of Clients by Investment Advisers, 1456–1492
NOTICES
Applications:
BlackRock, Inc., 1421–1425
Meetings; Sunshine Act, 1425
Self-Regulatory Organizations; Proposed Rule Changes:
Chicago Board Options Exchange, Inc., 1437–1438, 1444–1445
Depository Trust Co., 1425–1426
International Securities Exchange, LLC, 1428–1431, 1441–1442
NASDAQ OMX BX, 1436–1437
NASDAQ OMX PHLX, Inc., 1433–1434, 1442–1444
NASDAQ Stock Market LLC, 1434–1436
National Futures Association, 1426–1428, 1431–1432
New York Stock Exchange LLC, 1438–1439
NYSE Amex LLC, 1439–1441

Small Business Administration
PROPOSED RULES
Small Business Size Regulations:
8(a) Business Development/Small Disadvantaged Business Status Determinations, 1296–1297
NOTICES
Disaster Declarations:
Alabama, 1420–1421
Florida, 1420
Texas, 1421

Social Security Administration
RULES
Technical Revisions to the Supplemental Security Income (SSI) Regulations on Income and Resources, 1271–1274
NOTICES
Meetings:
Future Systems Technology Advisory Panel, 1446
Rate of Payment for Medical Records Received Through Health Information Technology Necessary to Make Disability Determinations, 1446–1447

Southwestern Power Administration
NOTICES
Integrated System Power Rates, 1363–1372

Surface Transportation Board
NOTICES
Construction and Operation Exemption:
Alaska Railroad Corp., Rail Line Between North Pole and Delta Junction, AK, 1447

Transportation Department
See Federal Aviation Administration
See Federal Motor Carrier Safety Administration
See National Highway Traffic Safety Administration
See Pipeline and Hazardous Materials Safety Administration
See Surface Transportation Board

Treasury Department
See Internal Revenue Service

Veterans Affairs Department
NOTICES
Allowance for Private Purchase of an Outer Burial Receptacle in Lieu of a Government-Furnished Graveliner for a Grave in a VA National Cemetery, 1454

Separate Parts In This Issue

Part II
Securities and Exchange Commission, 1456–1494

Part III
Commerce Department, International Trade Administration, 1496–1524

Reader Aids
Consult the Reader Aids section at the end of this page for phone numbers, online resources, finding aids, reminders, and notice of recently enacted public laws.

To subscribe to the Federal Register Table of Contents LISTSERV electronic mailing list, go to http://listserv.access.gpo.gov and select Online mailing list archives, FEDREGTOC-L, Join or leave the list (or change settings); then follow the instructions.

CFR PARTS AFFECTED IN THIS ISSUE

A cumulative list of the parts affected this month can be found in the Reader Aids section at the end of this issue.

7 CFR
980 1269
993 1269

12 CFR

Proposed Rules:
906 1289
1207 1289

13 CFR

Proposed Rules:
121 1296
124 1296

14 CFR

Proposed Rules:
39 1297

17 CFR
275 1456
276 1492
279 1456

20 CFR
416 1271

21 CFR
522 (2 documents) 1274
558 1275

26 CFR

Proposed Rules:
1 1301

30 CFR
250 1276

39 CFR
3020 1280

Proposed Rules:
3050 1301

40 CFR
52 1284

47 CFR
25 1285

49 CFR

Proposed Rules:
172 1302
173 1302
175 1302

50 CFR

Proposed Rules:
300 1324

Rules and Regulations

Federal Register
Vol. 75, No. 6
Monday, January 11, 2010

This section of the FEDERAL REGISTER contains regulatory documents having general applicability and legal effect, most of which are keyed to and codified in the Code of Federal Regulations, which is published under 50 titles pursuant to 44 U.S.C. 1510.

The Code of Federal Regulations is sold by the Superintendent of Documents. Prices of new books are listed in the first FEDERAL REGISTER issue of each week.

DEPARTMENT OF AGRICULTURE

Agricultural Marketing Service

7 CFR Part 980

[Doc. No. AMS–FV–08–0018; FV08–980–1 C]

Vegetable Import Regulations; Modification of Potato Import Regulations; Correction

AGENCY: Agricultural Marketing Service, USDA.

ACTION: Final rule; correction.

SUMMARY: The Agricultural Marketing Service is correcting a final rule that appeared in the **Federal Register** of December 10, 2009. The rule modified the import regulations for Irish potatoes and made minor administrative changes to the potato, onion, and tomato import regulations to update informational references. This document corrects two Code of Federal Regulation citations in the informational references that were cited incorrectly.

DATES: *Effective Date:* January 11, 2010.

FOR FURTHER INFORMATION CONTACT: Barry Broadbent or Gary D. Olson, Northwest Marketing Field Office, Marketing Order Administration Branch, Fruit and Vegetable Programs, AMS, USDA, 1220 SW. Third Avenue, Suite 385, Portland, OR 97204; *Telephone:* (503) 326–2724, *Fax:* (503) 326–7440, or *E-mail: Barry.Broadbent@usda.gov* or *GaryD.Olson@usda.gov.*

SUPPLEMENTARY INFORMATION: In FR Doc. AMS–FV–08–0018; FV08–980–1 FR in the **Federal Register** of Thursday, December 10, 2009 (74 FR 65390), the following corrections are made:

§ 980.117 [Corrected]

■ 1. On page 65394, in the second column, amendatory instruction 5(c) is revised to read "Amend paragraph (h) by removing the references '(7 CFR 2851.3195 through 2851.3209),' '(7 CFR 2851.3955 through 2851.3970),' and '(7 CFR 2851.2830 through 2851.2854)' and by adding in their places the references '(7 CFR 51.3195 through 51.3209),' '(7 CFR 51.3955 through 51.3970),' and '(7 CFR 51.2830 through 51.2854)', respectively."

Dated: January 6, 2010.

David R. Shipman,

Acting Administrator, Agricultural Marketing Service.

[FR Doc. 2010–314 Filed 1–8–10; 8:45 am]

BILLING CODE 3410–02–P

DEPARTMENT OF AGRICULTURE

Agricultural Marketing Service

7 CFR Part 993

[Doc. No. AMS–FV–09–0048; FV09–993–1 FIR]

Dried Prunes Produced in California; Decreased Assessment Rate

AGENCY: Agricultural Marketing Service, USDA.

ACTION: Affirmation of interim final rule as final rule.

SUMMARY: The Department of Agriculture (USDA) is adopting, as a final rule, without change, an interim final rule that decreased the assessment rate established for the Prune Marketing Committee (Committee), for the 2009–10 and subsequent crop years from $0.30 to $0.16 per ton of salable dried prunes. The Committee locally administers the marketing order that regulates the handling of dried prunes in California. The interim final rule was necessary to align the Committee's expected revenue with decreases in its proposed budget for the 2009–10 and subsequent crop years, which began on August 1. The assessment rate will remain in effect indefinitely unless modified, suspended, or terminated.

DATES: *Effective Date:* January 12, 2010.

FOR FURTHER INFORMATION CONTACT: Debbie Wray, Marketing Specialist, or Kurt J. Kimmel, Regional Manager, California Marketing Field Office, Marketing Order Administration Branch, Fruit and Vegetable Programs, AMS, USDA; *Telephone:* (559) 487–5901, *Fax:* (559) 487–5906, or *E-mail: Debbie.Wray@ams.usda.gov* or *Kurt.Kimmel@ams.usda.gov.*

Small businesses may obtain information on complying with this, and other marketing order and agreement regulations by viewing a guide at the following Web site: *http://www.ams.usda.gov/AMSv1.0/ams.fetchTemplateData.do?template=TemplateN&page=MarketingOrdersSmallBusinessGuide;* or by contacting Jay Guerber, Marketing Order Administration Branch, Fruit and Vegetable Programs, AMS, USDA, 1400 Independence Avenue, SW., STOP 0237, Washington, DC 20250–0237; *Telephone:* (202) 720–2491, *Fax:* (202) 720–8938, or *E-mail: Jay.Guerber@ams.usda.gov.*

SUPPLEMENTARY INFORMATION: This rule is issued under Marketing Agreement No. 110 and Marketing Order No. 993, both as amended (7 CFR part 993), regulating the handling of dried prunes grown in California, hereinafter referred to as the "order." The order is effective under the Agricultural Marketing Agreement Act of 1937, as amended (7 U.S.C. 601–674), hereinafter referred to as the "Act."

The Department of Agriculture (USDA) is issuing this rule in conformance with Executive Order 12866.

Under the order, California dried prune handlers are subject to assessments, which provide funds to administer the order. Assessment rates issued under the order are intended to be applicable to all assessable salable dried prunes for the entire crop year, and continue indefinitely until amended, suspended, or terminated. The Committee's fiscal period begins on August 1 and ends on July 31.

In an interim final rule published in the **Federal Register** on September 9, 2009, and effective on September 10, 2009 (74 FR 46310, Doc. No. AMS–FV–09–0048; FV09–993–1 IFR), § 993.347 was amended by decreasing the assessment rate established for the Committee for the 2009–10 and subsequent crop years from $0.30 to $0.16 per ton of California salable dried prunes. The decrease in the per-ton assessment rate was possible due to significant decreases in operating expenses and contingencies, and a significant increase in the crop estimate for the 2009–10 crop year.

Final Regulatory Flexibility Analysis

Pursuant to requirements set forth in the Regulatory Flexibility Act (RFA), the Agricultural Marketing Service (AMS) has considered the economic impact of this rule on small entities. Accordingly, AMS has prepared this final regulatory flexibility analysis.

The purpose of the RFA is to fit regulatory actions to the scale of business subject to such actions in order that small businesses will not be unduly or disproportionately burdened. Marketing orders issued pursuant to the Act, and the rules issued thereunder, are unique in that they are brought about through group action of essentially small entities acting on their own behalf.

There are approximately 900 producers of salable dried prunes in the production area and approximately 20 handlers subject to regulation under the marketing order. The Small Business Administration (13 CFR 121.201) defines small agricultural producers as those whose annual receipts are less than $750,000, and small agricultural service firms are defined as those whose annual receipts are less than $7,000,000.

Committee data indicates that about 64 percent of the handlers ship under $7,000,000 worth of dried prunes. Dividing the average prune crop value for 2008–09 reported by the National Agricultural Statistics Service (NASS) of $196,080,000 by the number of producers (900) yields an average annual producer revenue estimate of about $217,867. Based on the foregoing, the majority of handlers and dried prune producers may be classified as small entities.

This rule continues in effect the action that decreased the assessment rate established for the Committee and collected from handlers for the 2009–10 and subsequent crop years from $0.30 to $0.16 per ton of salable dried prunes.

The Committee met on June 25, 2009, and unanimously recommended expenses of $54,138 and a decreased assessment rate of $0.16 per ton of salable dried prunes for the 2009–10 crop year. The Committee's budget of expenses of $54,138 includes a slight increase in personnel expenses and decreases in operating expenses and for contingencies. Most of the Committee's expenses reflect its portion of the joint administrative costs of the Committee and the California Dried Plum Board (CDPB). The Committee believes that extra assessment income carried in from the 2008 crop year, plus interest income and 2009–10 crop year assessment income, is adequate to cover its estimated expenses of $54,138.

The assessment rate of $0.16 per ton of salable dried prunes is $0.14 per ton of salable dried prunes lower than the rate currently in effect. The quantity of salable dried prunes for the 2009–10 crop year is currently estimated at 160,000 tons, compared to 125,373 tons of salable dried prunes for the 2008–09 crop year.

The major expenditures recommended by the Committee for the 2009–10 crop year include $26,450 for salaries and benefits, $11,780 for operating expenses, and $15,908 for contingencies. In comparison, budgeted expenses for these items in 2008–09 were $26,248 for salaries and benefits, $12,893 for operating expenses, and $26,459 for contingencies.

The 2009–10 assessment rate was derived by considering the handler assessment revenue needed to meet anticipated expenses, the estimated salable tons of California dried prunes, excess funds carried forward into the 2009–10 crop year, and estimated interest income. Therefore, the Committee recommended an assessment rate of $0.16 per ton of salable dried prunes.

Prior to arriving at its budget of $54,138, the Committee considered information from various sources, including the Committee's Executive Subcommittee. The Executive Subcommittee reviewed the administrative expenses shared between the Committee and the CDPB in recent years. The Executive Subcommittee then recommended the $54,138 budget and $0.16 per ton assessment rate to the Committee. The Committee recommended the same budget and assessment rate to USDA.

Section 993.81(c) of the order provides the Committee the authority to use excess assessment funds from the 2008–09 crop year (estimated at $28,533) for up to 5 months beyond the end of the crop year to meet 2009–10 crop year expenses, which are estimated to be $54,138. At the end of the 5 months, the Committee either refunds or credits excess funds to handlers.

To calculate the percentage of grower revenue represented by the assessment rate for 2008, the assessment rate of $0.30 per ton is divided by the estimated average grower price (according to the NASS). This results in estimated assessment revenue for the 2008–09 crop year as a percentage of grower revenue of .02 percent ($0.30 divided by $1,520 per ton). NASS data for 2009 is not yet available. However, applying the same calculations above using the average grower price for 2006–08 would result in estimated assessment revenue as a percentage of total grower revenue of .01 percent for the 2009–10 crop year ($0.16 divided by $1,453 per ton). Thus, the assessment revenue should be well below 1 percent of estimated grower revenue in 2009.

This action continues in effect the decreased assessment obligation imposed on handlers. Assessments are applied uniformly on all handlers, and some of the costs may be passed on to producers. However, decreasing the assessment rate reduces the burden on handlers, and may reduce the burden on producers. In addition, the Committee's meeting was widely publicized throughout the California dried prune industry and all interested persons were invited to attend the meeting and participate in Committee deliberations on all issues. Like all Committee meetings, the June 25, 2009, meeting was a public meeting and all entities, both large and small, were able to express views on this issue.

This action imposes no additional reporting or recordkeeping requirements on either small or large dried prune handlers. As with all Federal marketing order programs, reports and forms are periodically reviewed to reduce information requirements and duplication by industry and public sector agencies.

In addition, USDA has not identified any relevant Federal rules that duplicate, overlap, or conflict with this rule.

Comments on the interim final rule were required to be received on or before November 9, 2009. No comments were received. Therefore, for the reasons given in the interim final rule, we are adopting the interim final rule as a final rule, without change.

To view the interim final rule, go to: *http://www.regulations.gov/search/Regs/home.html#documentDetail?R=0900006480a1f26c.*

This action also affirms information contained in the interim final rule concerning Executive Orders 12866 and 12988, the Paperwork Reduction Act (44 U.S.C. Chapter 35), and the E-Gov Act (44 U.S.C. 101).

After consideration of all relevant material presented, it is found that finalizing the interim final rule, without change, as published in the **Federal Register** (74 FR 46310, September 9, 2009) will tend to effectuate the declared policy of the Act.

List of Subjects in 7 CFR Part 993

Marketing agreements, Plums, Prunes, Reporting and recordkeeping requirements.

PART 993—DRIED PRUNES PRODUCED IN CALIFORNIA [AMENDED]

■ Accordingly, the interim final rule amending 7 CFR part 993 which was published at 74 FR 46310 on September 9, 2009, is adopted as a final rule, without change.

Dated: January 5, 2010.

Rayne Pegg,

Administrator, Agricultural Marketing Service.

[FR Doc. 2010–163 Filed 1–8–10; 8:45 am]

BILLING CODE 3410–02–P

SOCIAL SECURITY ADMINISTRATION

20 CFR Part 416

[Docket No. SSA 2008–0034]

RIN 0960–AG66

Technical Revisions to the Supplemental Security Income (SSI) Regulations on Income and Resources

AGENCY: Social Security Administration.

ACTION: Final rules.

SUMMARY: We are amending our Supplemental Security Income (SSI) regulations by making technical revisions to our rules on income and resources. Many of these revisions reflect legislative changes found in the Consolidated Appropriations Act of 2001 (CAA), the Economic Growth and Tax Relief Reconciliation Act of 2001 (EGTRRA), an amendment to the National Flood Insurance Act of 1968 (NFIA), the Energy Employees Occupational Illness Compensation Program Act of 2000 (EEOICPA), and the Social Security Protection Act of 2004 (SSPA). We are also amending our SSI rules to extend the home exclusion to beneficiaries who, because of domestic abuse, leave a home that had otherwise been an excludable resource. Finally, we are updating our "conditional-payment" rule to eliminate the liquid-resource requirement as a prerequisite to receiving conditional-benefit payments.

DATES: These final rules are effective on February 10, 2010.

FOR FURTHER INFORMATION CONTACT: Donna Gonzalez, Social Insurance Specialist, Social Security Administration, Office of Income Security Programs, 252 Altmeyer Building, 6401 Security Boulevard, Baltimore, MD 21235–6401, (410) 965–7961, for information about this notice. For information on eligibility or filing for benefits, call our national toll-free number, 1–800–772–1213 or TTY 1–800–325–0778, or visit our Internet site, Social Security Online, at *http://www.socialsecurity.gov.*

SUPPLEMENTARY INFORMATION:

Electronic Version

The electronic file of this document is available on the date of publication in the **Federal Register** at *http://www.gpoaccess.gov/fr/index.html.*

Explanation of Changes

We are revising and making final the rules we proposed in the notice of proposed rulemaking (NPRM) published in the **Federal Register** on December 9, 2008 (73 FR 74663). These conforming changes revise our regulations to reflect legislation enacted during the past several years and to address two policy concerns.

Background

The primary goal of the SSI program is to ensure a minimum level of income to people who are aged 65 or older, blind, or disabled, and who have limited income and resources. The law provides that SSI payments can be made only to people who have income and resources below specified amounts. Therefore, income and resources are major factors in deciding SSI eligibility and the amount of any SSI payments.

The Changes We Are Making in These Final Rules

We discuss below the changes we are making in these final rules. We have grouped the changes by the policy areas affected.

Statutory Employees

Statutory employees are certain independent contractors, including agent-drivers or commission-drivers, certain full-time life insurance salespersons, home workers, and traveling or city salespersons. Social Security Act (Act) at 210(j)(3) (42 U.S.C. 410(j)(3)). We are revising section 416.1110(b) to update the definition of net earnings from self-employment to include the earnings of statutory employees, as provided under section 519 of the CAA, which amended section 1612(a)(1) of the Act (42 U.S.C. 1382a(a)(1)). *See* Public Law 106–554, app. A, 519 (Dec. 21, 2000). Previously, we treated statutory employees the same as employees for SSI eligibility and payment-amount purposes and considered their wages as earned income. After this change to the Act, we now treat statutory employees as self-employed individuals and count only their net earnings, deducting business expenses before calculating their income.

Exclusion of Child Tax Credit (CTC) From Income and Resources

We exclude from income the payment of a refundable CTC pursuant to the EGTRRA. Public Law 107–16, section 203, 115 Stat. 49 (June 7, 2001) (referring to Internal Revenue Code section 24, 26 U.S.C. 24). This exclusion, which was effective for SSI purposes for taxable years beginning on or after January 1, 2001, is not currently in our regulations. We also exclude the payment of a refundable CTC from resources for the 9 months following the month of receipt. Currently the resource exclusion is included under section 416.1236, titled "Exclusions from resources; provided by other statutes." This resource exclusion is now provided in the Act at 1613(a)(11) (42 U.S.C. 1382b(a)(11)), as amended by the SSPA, Public Law 108–203, 431 (Mar. 2, 2004). We are making the following revisions to conform to these changes:

- We are adding new paragraph (m) under the heading "V. *Other,*" in the appendix to subpart K to exclude from income a refundable CTC paid under section 24 of the Internal Revenue Code of 1986. This appendix section lists types of income excluded under the SSI program as provided by Federal laws other than the Act.
- We are amending section 416.1235 to correctly reflect that the exclusion for payment of a refundable CTC is now provided under the Act. This provision previously appeared in our rules at section 416.1236(a)(24) within a list of exclusions provided by other statutes. We are moving this exclusion to section 416.1235 but we are not making any substantive changes to it. Under this provision, a CTC payment is excluded from resources for SSI purposes during the month the payment is received and the following month for payments received before March 2, 2004, and for the 9 months following the month of receipt for payments received on or after March 2, 2004. We also are changing the title of this section to more accurately reflect its contents.
- We are adding new paragraph (v) to section 416.1210, which provides a list of general resources we do not count when determining SSI eligibility. This new paragraph excludes from resources the payment of a refundable CTC and includes a cross-reference to section 416.1235.
- We are removing from section 416.1236(a) former paragraph (24), which had excluded from resources the payment of a refundable CTC. As

described above, we are adding this exclusion to section 416.1235.

Exclusion of Flood Mitigation Payments From Income and Resources

Payments made for flood mitigation activities are not counted as income or resources when determining SSI eligibility and payment amounts. These exclusions are pursuant to an amendment to the NFIA of 1968. NFIA, section 1324, as amended by Public Law 109–64, section 1 (Jan. 7, 2005). We are making the following revisions to conform to these changes:

- We are adding new paragraph (n) under the heading "V. *Other,*" in the appendix to subpart K to exclude from income payments made for flood mitigation activities.
- We are adding new paragraph (24) to section 416.1236(a) to exclude from resources payments for flood mitigation activities.

Exclusion of Energy Employee Occupational Illness Medical Benefits and Compensation Payment From Income and Resources

Medical benefits and compensation payments made to energy employees because of occupational illnesses are not counted as income or resources for purposes of determining eligibility to receive, or for determining the amount of, certain Federal benefits, including SSI. These exclusions are provided under section 3646 of the Appendix to Public Law 106–398, which established the EEOICPA in October 2000. Public Law 106–398, section 1, app., title XXXVI (October 30, 2000) (section 1 adopting as Appendix H.R. 5408). We are making the following revisions to conform to these changes:

- We are adding new paragraph (o) under the heading "V. *Other,*" in the appendix to subpart K to exclude from income medical benefits and compensation payments made under the EEOICPA.
- We are adding new paragraph (25) to section 416.1236(a) to exclude from resources medical benefits and compensation payments made under the EEOICPA.

Home Exclusion to Victims of Domestic Abuse

An SSI applicant's or beneficiary's home and associated land are excluded from resources by section 1613(a)(1) of the Act. Regulations provide that the home is excluded so long as it serves as the principal place of residence, or the SSI applicant or beneficiary maintains an active intent to return to the residence. The home is also not counted as a resource, regardless of the intent to return, if the SSI applicant or beneficiary resides in an institution, and a spouse or dependent relative continues to maintain residence in the home during the period of institutionalization.

Advocacy groups have expressed concern regarding the counting of a home as a resource in instances where a victim of domestic abuse leaves the home and resides elsewhere. Currently, a victim fleeing from domestic abuse may return to a potentially dangerous home environment simply to avoid losing SSI because of an ownership interest in the home. We agree with these concerns and are amending our rules. We are adding new paragraph (d) to section 416.1212 to extend the home exclusion to victims of domestic abuse who flee an abusive situation, but maintain an ownership interest in an otherwise excluded home. This exclusion continues until the SSI applicant or beneficiary establishes a new principal place of residence or takes other action rendering the home no longer excludable.

Conditional Payments

An individual who meets all but the resource requirements for SSI may have little or nothing on which to live if most of his or her resources are non-liquid and difficult to convert to cash. Section 416.1240(a) contains an exception to our ordinary resource rules, which allows us to pay monthly SSI payments in certain circumstances when an SSI applicant or beneficiary possesses excess non-liquid resources. We can make "conditional payments" to give an SSI applicant or beneficiary some time in which to sell excess non-liquid resources and convert them to cash. We condition these payments on the SSI applicant's or beneficiary's written agreement to sell these non-liquid resources within 9 months for real property and within 3 months for all other non-liquid resources and repay the conditional payments with the proceeds.

Under current rules, we will not make conditional payments if the SSI applicant or beneficiary has countable liquid resources in excess of 3 times the monthly Federal Benefit Rate (FBR). The original purpose of the liquid-resource limit was to ensure that an SSI applicant or beneficiary truly needed the conditional-payment period. If an SSI applicant or beneficiary did not have liquid resources equal to 3 months worth of SSI payments, then we assumed that he or she had inadequate liquid resources to meet day-to-day expenses. However, if this SSI applicant or beneficiary had excess *non-liquid* resources, he or she could agree to dispose of those excess resources using the conditional-payment rule. Conversely, if an SSI applicant or beneficiary had liquid resources worth more than 3 times the FBR, then we assumed that he or she had adequate resources and did not need conditional payments.

When we established this rule over 30 years ago, 3 months worth of SSI payments was equal to only about 32% of the resource limit. Since then, the FBR has increased annually, and the resource limit has grown slowly or not at all. As of January 2009, 3 times the monthly FBR is more than the statutory limit on total resources and, therefore, has become meaningless. Accordingly, we are deleting the limitation on liquid resources in paragraph (a)(1) that was a prerequisite to receiving conditional-benefit payments to simplify our conditional-payments rule. We are also adding a technical cross-reference to paragraphs (a)(1) and (a)(2) in paragraphs (b) and (c) of section 416.1240, which was not included in the NPRM.

Public Comments

In the NPRM, we provided the public a 60-day period within which to comment on our proposed changes. That comment period ended on February 9, 2009. We received two comments, one from an individual and another from an organization, both of which indicated full agreement with our proposed changes. Therefore, we are publishing the text of the proposed rules substantively unchanged in these final rules, except we also have added the cross-reference noted above to paragraphs (b) and (c) of section 416.1240.

Regulatory Procedures

Executive Order 12866

The Office of Management and Budget (OMB) determined that the proposed rules published on December 9, 2008 at 73 FR 74663, on which we base these final rules, met the criteria for a significant regulatory action under Executive Order 12866. Therefore, those proposed rules were subject to OMB review. We received no adverse comments on the proposed rules and are publishing these final rules substantively as proposed, with the exception noted above to add a cross-reference. Thus, OMB has waived further review of these rules.

Regulatory Flexibility Act

We certify that these final rules will not have a significant economic impact

on a substantial number of small entities as they affect individuals only. Therefore, a regulatory flexibility analysis as provided in the Regulatory Flexibility Act, as amended, is not required.

Paperwork Reduction Act

These final rules impose no reporting or recordkeeping requirements subject to OMB clearance.

(Catalog of Federal Domestic Assistance Program No. 96.006, Supplemental Security Income)

List of Subjects in 20 CFR Part 416

Administrative practice and procedure; Aged, Blind, Disability benefits; Public assistance programs; Reporting and recordkeeping requirements; Supplemental Security Income (SSI).

Dated: January 5, 2010.

Michael J. Astrue,

Commissioner of Social Security.

■ For the reasons set forth in the preamble, we amend subparts K and L of part 416 of chapter III of title 20 of the Code of Federal Regulations as follows:

PART 416—SUPPLEMENTAL SECURITY INCOME FOR THE AGED, BLIND, AND DISABLED

Subpart K—[Amended]

■ 1. The authority citation for subpart K of part 416 continues to read as follows:

Authority: Secs. 702(a)(5), 1602, 1611, 1612, 1613, 1614(f), 1621, 1631, and 1633 of the Social Security Act (42 U.S.C. 902(a)(5), 1381a, 1382, 1382a, 1382b, 1382c(f), 1382j, 1383, and 1383b); sec. 211, Pub. L. 93–66, 87 Stat. 154 (42 U.S.C. 1382 note).

■ 2. Revise § 416.1110 paragraph (b) to read as follows:

§ 416.1110 What is earned income.

* * * * *

(b) *Net earnings from self-employment.* Net earnings from self-employment are your gross income from any trade or business that you operate, less allowable deductions for that trade or business. Net earnings also include your share of profit or loss in any partnership to which you belong. For taxable years beginning before January 1, 2001, net earnings from self-employment under the SSI program are the same net earnings that we would count under the social security retirement insurance program and that you would report on your Federal income tax return. (See § 404.1080 of this chapter.) For taxable years beginning on or after January 1, 2001, net earnings from self-employment under the SSI program will also include the earnings of statutory employees. In addition, for SSI purposes only, we consider statutory employees to be self-employed individuals. Statutory employees are agent or commission drivers, certain full-time life insurance salespersons, home workers, and traveling or city salespersons. (*See* § 404.1008 of this chapter for a more detailed description of these types of employees).

* * * * *

■ 3. Amend the appendix to subpart K of part 416 by adding new paragraphs (m), (n), and (o) under Part V to read as follows:

Appendix to Subpart K of Part 416—List of Types of Income Excluded Under the SSI Program as Provided by Federal Laws Other Than the Social Security Act

* * * * *

V. Other

* * * * *

(m) Payments of the refundable child tax credit made under section 24 of the Internal Revenue Code of 1986, pursuant to section 203 of the Economic Growth and Tax Relief Reconciliation Act of 2001, Public Law 107–16 (115 Stat. 49, 26 U.S.C. 24 note).

(n) Assistance provided for flood mitigation activities as provided under section 1324 of the National Flood Insurance Act of 1968, pursuant to section 1 of Public Law 109–64 (119 Stat. 1997, 42 U.S.C. 4031).

(o) Payments made to individuals under the Energy Employees Occupational Illness Compensation Program Act of 2000, pursuant to section 1 [Div. C, Title XXXVI section 3646] of Public Law 106–398 (114 Stat. 1654A–510, 42 U.S.C. 7385e).

Subpart L—[Amended]

■ 4. The authority citation for subpart L of part 416 continues to read as follows:

Authority: Secs. 702(a)(5), 1602, 1611, 1612, 1613, 1614(f), 1621, 1631, and 1633 of the Social Security Act (42 U.S.C. 902(a)(5), 1381a, 1382, 1382a, 1382b, 1382c(f), 1382j, 1383, and 1383b); sec. 211, Pub. L. 93–66, 87 Stat. 154 (42 U.S.C. 1382 note).

■ 5. Amend § 416.1210 by:

■ a. Adding a comma in the introductory sentence after "(and spouse, if any)";

■ b. Removing the word "and" from the end of paragraph (t);

■ c. Removing the period at the end of paragraph (u) and adding in its place "; and"; and

■ d. Adding a new paragraph (v) to read as follows:

§ 416.1210 Exclusions from resources; general.

* * * * *

(v) Payment of a refundable child tax credit, as provided in § 416.1235.

■ 6. Amend § 416.1212 by:

■ a. Redesignating paragraphs (d) through (g) as (e) through (h) and adding a new paragraph (d) to read as set forth below;

■ b. In redesignated paragraph (e)(2)(ii), removing the reference to "paragraph (e)" and adding in its place a reference to "paragraph (f)";

■ c. In redesignated paragraph (e)(2)(iii), removing the reference to "paragraph (f)" and adding in its place a reference to "paragraph (g)"; and

■ d. In redesignated paragraph (f), removing the reference to "paragraph (d)(2)(ii) of this section" and adding in its place a reference to "paragraph (e)(2)(ii) of this section", and removing the reference to "paragraph (f)" and adding in its place a reference to "paragraph (g)".

§ 416.1212 Exclusion of the home.

* * * * *

(d) *If an individual leaves the principal place of residence due to domestic abuse.* If an individual moves out of his or her home without the intent to return, but is fleeing the home as a victim of domestic abuse, we will not count the home as a resource in determining the individual's eligibility to receive, or continue to receive, SSI payments. In that situation, we will consider the home to be the individual's principal place of residence until such time as the individual establishes a new principal place of residence or otherwise takes action rendering the home no longer excludable.

* * * * *

■ 7. Revise § 416.1235 to read as follows:

§ 416.1235 Exclusion of certain payments related to tax credits.

(a) In determining the resources of an individual (and spouse, if any), we exclude for the 9 months following the month of receipt the following funds received on or after March 2, 2004, the unspent portion of:

(1) Any payment of a refundable credit pursuant to section 32 of the Internal Revenue Code (relating to the earned income tax credit);

(2) Any payment from an employer under section 3507 of the Internal Revenue Code (relating to advance payment of the earned income tax credit); or

(3) Any payment of a refundable credit pursuant to section 24 of the Internal Revenue Code (relating to the child tax credit).

(b) Any unspent funds described in paragraph (a) of this section that are retained until the first moment of the

tenth month following their receipt are countable as resources at that time.

(c) *Exception:* For any payments described in paragraph (a) of this section received before March 2, 2004, we will exclude for the month following the month of receipt the unspent portion of any such payment.

■ 8. Amend § 416.1236 by revising paragraph (a)(24) and adding a new paragraph (a)(25) to read as follows:

§ 416.1236 Exclusions from resources; provided by other statutes.

(a) * * *

(24) Assistance provided for flood mitigation activities under section 1324 of the National Flood Insurance Act of 1968, pursuant to section 1 of Public Law 109–64 (119 Stat. 1997, 42 U.S.C. 4031).

(25) Payments made to individuals under the Energy Employees Occupational Illness Compensation Program Act of 2000, pursuant to section 1, app. [Div. C. Title XXXVI section 3646] of Public Law 106–398 (114 Stat. 1654A–510, 42 U.S.C. 7385e).

* * * * *

■ 9. Revise § 416.1240 to read as follows:

§ 416.1240 Disposition of Resources.

(a) Where the resources of an individual (and spouse, if any) are determined to exceed the limitations prescribed in § 416.1205, such individual (and spouse, if any) shall not be eligible for payment except under the conditions provided in this section. Payment will be made to an individual (and spouse, if any) if the individual agrees in writing to:

(1) Dispose of, at current market value, the nonliquid resources (as defined in § 416.1201(c)) in excess of the limitations prescribed in § 416.1205 within the time period specified in § 416.1242; and

(2) Repay any overpayments (as defined in § 416.1244) with the proceeds of such disposition.

(b) Payment made for the period during which the resources are being disposed of will be conditioned upon the disposition of those resources as prescribed in paragraphs (a)(1) and (a)(2) of this section. Any payments so made are (at the time of disposition) considered overpayments to the extent they would not have been paid had the disposition occurred at the beginning of the period for which such payments were made.

(c) If an individual fails to dispose of the resources as prescribed in paragraphs (a)(1) and (a)(2) of this section, regardless of the efforts he or she makes to dispose of them, the resources will be counted at their current market value and the individual will be ineligible due to excess resources. We will use the original estimate of current market value unless the individual submits evidence establishing a lower value (e.g., an estimate from a disinterested knowledgeable source).

[FR Doc. 2010–241 Filed 1–8–10; 8:45 am]

BILLING CODE 4191–02–P

DEPARTMENT OF HEALTH AND HUMAN SERVICES

Food and Drug Administration

21 CFR Part 522

[Docket No. FDA–2009–N–0665]

Implantation or Injectable Dosage Form New Animal Drugs; Hyaluronate Sodium

AGENCY: Food and Drug Administration, HHS.

ACTION: Final rule.

SUMMARY: The Food and Drug Administration (FDA) is amending the animal drug regulations to reflect approval of a supplemental new animal drug application (NADA) filed by Anika Therapeutics, Inc. The supplemental NADA provides for a revised human food safety warning for use of hyaluronate sodium injectable solution in horses.

DATES: This rule is effective January 11, 2010.

FOR FURTHER INFORMATION CONTACT: Melanie R. Berson, Center for Veterinary Medicine (HFV–110), Food and Drug Administration, 7500 Standish Pl., Rockville, MD 20855, 240–276–8337, e-mail: *melanie.berson@fda.hhs.gov*.

SUPPLEMENTARY INFORMATION: Anika Therapeutics, Inc., 236 W. Cummings Park, Woburn, MA 01801, filed a supplement to NADA 122–578 that provides for the veterinary prescription use of HYVISC (hyaluronate sodium) Sterile Injection in horses. The supplemental NADA provides for a revised human food safety warning on product labeling. The supplemental NADA is approved as of December 11, 2009, and the regulations are amended in 21 CFR 522.1145 to reflect the approval.

Approval of this supplemental NADA did not require review of additional safety or effectiveness data or information. Therefore, a freedom of information summary is not required.

FDA has determined under 21 CFR 25.33 that this action is of a type that does not individually or cumulatively have a significant effect on the human environment. Therefore, neither an environmental assessment nor an environmental impact statement is required.

This rule does not meet the definition of "rule" in 5 U.S.C. 804(3)(A) because it is a rule of "particular applicability." Therefore, it is not subject to the congressional review requirements in 5 U.S.C. 801–808.

List of Subjects in 21 CFR Part 522

Animal drugs.

■ Therefore, under the Federal Food, Drug, and Cosmetic Act and under the authority delegated to the Commissioner of Food and Drugs and redelegated to the Center for Veterinary Medicine, 21 CFR part 522 is amended as follows:

PART 522—IMPLANTATION OR INJECTABLE DOSAGE FORM NEW ANIMAL DRUGS

■ 1. The authority citation for 21 CFR part 522 continues to read as follows:

Authority: 21 U.S.C. 360b.

§ 522.1145 [Amended]

■ 2. In paragraph (f)(3)(iii) of § 522.1145, remove the third sentence and in its place add "Do not use in horses intended for human consumption."

Dated: December 31, 2009.

Bernadette Dunham,

Director, Center for Veterinary Medicine.

[FR Doc. 2010–207 Filed 1–8–10; 8:45 am]

BILLING CODE 4160–01–S

DEPARTMENT OF HEALTH AND HUMAN SERVICES

Food and Drug Administration

21 CFR Part 522

[Docket No. FDA–2009–N–0665]

Implantation or Injectable Dosage Form New Animal Drugs; Florfenicol and Flunixin

AGENCY: Food and Drug Administration, HHS.

ACTION: Final rule.

SUMMARY: The Food and Drug Administration (FDA) is amending the animal drug regulations to reflect approval of an original new animal drug application (NADA) filed by Intervet, Inc. The NADA provides for veterinary prescription use of a combination injectable solution containing

florfenicol and flunixin meglumine in cattle.

DATES: This rule is effective January 11, 2010.

FOR FURTHER INFORMATION CONTACT: Cindy L. Burnsteel, Center for Veterinary Medicine (HFV–130), Food and Drug Administration, 7500 Standish Pl., Rockville, MD 20855, 240–276–8341, e-mail: *cindy.burnsteel@fda.hhs.gov*.

SUPPLEMENTARY INFORMATION: Intervet, Inc., 56 Livingston Ave., Roseland, NJ 07068, filed NADA 141–299 that provides for use RESFLOR GOLD (florfenicol and flunixin meglumine), a combination injectable solution, for treatment of bovine respiratory disease (BRD) associated with *Mannheimia haemolytica*, *Pasteurella multocida*, and *Histophilus somni*, and control of BRD-associated pyrexia in beef and non-lactating dairy cattle. The NADA is approved as of November 23, 2009, and the regulations in 21 CFR part 522 are amended by adding § 522.956 to reflect the approval.

In accordance with the freedom of information provisions of 21 CFR part 20 and 21 CFR 514.11(e)(2)(ii), a summary of safety and effectiveness data and information submitted to support approval of this application may be seen in the Division of Dockets Management (HFA–305), Food and Drug Administration, 5630 Fishers Lane, rm. 1061, Rockville, MD 20852, between 9 a.m. and 4 p.m., Monday through Friday.

Under section 512(c)(2)(F)(ii) of the Federal Food, Drug, and Cosmetic Act (21 U.S.C. 360b(c)(2)(F)(ii)), this approval qualifies for 3 years of marketing exclusivity beginning on the date of approval.

The agency has determined under 21 CFR 25.33 that this action is of a type that does not individually or cumulatively have a significant effect on the human environment. Therefore, neither an environmental assessment nor an environmental impact statement is required.

This rule does not meet the definition of "rule" in 5 U.S.C. 804(3)(A) because it is a rule of "particular applicability." Therefore, it is not subject to the congressional review requirements in 5 U.S.C. 801–808.

List of Subjects in 21 CFR Part 522

Animal drugs.

■ Therefore, under the Federal Food, Drug, and Cosmetic Act and under authority delegated to the Commissioner of Food and Drugs and redelegated to the Center for Veterinary Medicine, 21 CFR part 522 is amended as follows:

PART 522—IMPLANTATION OR INJECTABLE DOSAGE FORM NEW ANIMAL DRUGS

■ 1. The authority citation for 21 CFR part 522 continues to read as follows:

Authority: 21 U.S.C. 360b.

■ 2. Add § 522.956 to read as follows:

§ 522.956 Florfenicol and flunixin.

(a) *Specifications*. Each milliliter (mL) of solution contains 300 milligrams (mg) florfenicol and 16.5 mg flunixin (27.37 mg flunixin meglumine).

(b) *Sponsor*. See No. 000061 in § 510.600(c) of this chapter for use as in paragraph (d) of this section.

(c) *Tolerances*. See §§ 556.283 and 556.286 of this chapter.

(d) *Conditions for use in cattle*—(1) *Amount*. 40 mg florfenicol/kg body weight (BW) and 2.2 mg flunixin/kg BW (equivalent to 2 mL/15 kg BW or 6 mL/100 lbs) once, by subcutaneous injection.

(2) *Indications for use*. For treatment of bovine respiratory disease (BRD) associated with *Mannheimia haemolytica*, *Pasteurella multocida*, and *Histophilus somni*, and control of BRD-associated pyrexia in beef and non-lactating dairy cattle.

(3) *Limitations*. Federal law restricts this drug to use by or on the order of a licensed veterinarian. Animals intended for human consumption must not be slaughtered within 38 days of treatment. Do not use in female dairy cattle 20 months of age or older. Use of florfenicol in this class of cattle may cause milk residues. A withdrawal period has not been established in preruminating calves. Do not use in calves to be processed for veal.

Dated: December 31, 2009.

Bernadette Dunham,

Director, Center for Veterinary Medicine.

[FR Doc. 2010–209 Filed 1–8–10; 8:45 am]

BILLING CODE 4160–01–S

DEPARTMENT OF HEALTH AND HUMAN SERVICES

Food and Drug Administration

21 CFR Part 558

[Docket No. FDA–2009–N–0665]

New Animal Drugs; Ractopamine

AGENCY: Food and Drug Administration, HHS.

ACTION: Final rule.

SUMMARY: The Food and Drug Administration (FDA) is amending the animal drug regulations to reflect approval of a supplemental new animal drug application (NADA) filed by Elanco Animal Health, A Division of Eli Lilly & Co. The supplemental NADA provides for administering ractopamine hydrochloride Type C medicated feeds as a top dress to cattle fed in confinement for slaughter.

DATES: This rule is effective January 11, 2010.

FOR FURTHER INFORMATION CONTACT: Suzanne J. Sechen, Center for Veterinary Medicine (HFV–126), Food and Drug Administration, 7500 Standish Pl., Rockville, MD 20855, 240–276–8105, e-mail: *suzanne.sechen@fda.hhs.gov*.

SUPPLEMENTARY INFORMATION: Elanco Animal Health, A Division of Eli Lilly & Co., Lilly Corporate Center, Indianapolis, IN 46285, filed a supplement to NADA 141–221 that provides for use of OPTAFLEXX 45 (ractopamine hydrochloride) Type A medicated articles to formulate Type B and Type C medicated feeds administered to cattle fed in confinement for slaughter for increased rate of weight gain and improved feed efficiency during the last 28 to 42 days on feed. The supplement provides for feeding ractopamine hydrochloride Type C medicated feed as a top dress. The supplemental NADA is approved as of December 11, 2009, and the regulations in 21 CFR 558.500 are amended to reflect the approval.

In accordance with the freedom of information provisions of 21 CFR part 20 and 21 CFR 514.11(e)(2)(ii), a summary of safety and effectiveness data and information submitted to support approval of this application may be seen in the Division of Dockets Management (HFA–305), Food and Drug Administration, 5630 Fishers Lane, rm. 1061, Rockville, MD 20852, between 9 a.m. and 4 p.m., Monday through Friday.

The agency has determined under 21 CFR 25.33 that this action is of a type that does not individually or cumulatively have a significant effect on the human environment. Therefore, neither an environmental assessment nor an environmental impact statement is required.

Under section 512(c)(2)(F)(iii) of the Federal Food, Drug, and Cosmetic Act (21 U.S.C. 360b(c)(2)(F)(iii)), this supplemental approval qualifies for 3 years of marketing exclusivity beginning on the date of approval.

This rule does not meet the definition of "rule" in 5 U.S.C. 804(3)(A) because it is a rule of "particular applicability." Therefore, it is not subject to the congressional review requirements in 5 U.S.C. 801–808.

List of Subjects in 21 CFR Part 558

Animal drugs, Animal feeds.

■ Therefore, under the Federal Food, Drug, and Cosmetic Act and under the authority delegated to the Commissioner of Food and Drugs and redelegated to the Center for Veterinary Medicine, 21 CFR part 558 is amended as follows:

PART 558—NEW ANIMAL DRUGS FOR USE IN ANIMAL FEEDS

■ 1. The authority citation for 21 CFR part 558 continues to read as follows:

Authority: 21 U.S.C. 360b, 371.

■ 2. In § 558.500, in paragraph (e)(2), in the heading of the first table column, remove "Ractopame" and in its place add "Ractopamine"; and add paragraph (e)(2)(xi) to read as follows:

§ 558.500 Ractopamine.

* * * * *

(e) * * *

(2) *Cattle*—

Ractopamine in grams/ton	Combination in grams/ton	Indications for use	Limitations	Sponsor
* *	*	* *	*	*
(xi) Not to exceed 800; to provide 70 to 400 mg/head/day.		Cattle fed in confinement for slaughter: As in paragraph (e)(2)(i) of this section.	Top dress in a minimum of 1.0 lb of medicated feed.	000986
* *	*	* *	*	*

* * * * *

Dated: December 31, 2009.

Bernadette Dunham,

Director, Center for Veterinary Medicine.

[FR Doc. 2010–208 Filed 1–8–10; 8:45 am]

BILLING CODE 4160–01–S

DEPARTMENT OF THE INTERIOR

Minerals Management Service

30 CFR Part 250

[Docket ID MMS–2007–OMM–0066]

RIN 1010–AD45

Requirements for Subsurface Safety Valve Equipment

AGENCY: Minerals Management Service (MMS), Interior.

ACTION: Final rule.

SUMMARY: The MMS is incorporating by reference the Eleventh Edition of the American Petroleum Institute's Specification for Subsurface Safety Valve Equipment (API Spec 14A) into its regulations. The MMS is incorporating the Eleventh Edition of API Spec 14A because it updated the design validation and functional testing requirements, incorporated new design changes, and corrected ambiguous areas open to misinterpretation. These changes will ensure that lessees and operators use the best available and safest technologies while operating in the Outer Continental Shelf. The rule will also require that lessees and operators provide supporting design verification information for subsurface safety valves intended for use in high pressure high temperature environments.

DATES: *Effective Date:* This final rule is effective on February 10, 2010. The incorporation by reference of the publication listed in the regulation is approved by the Director of the Federal Register as of February 10, 2010.

FOR FURTHER INFORMATION CONTACT: Wilbon Rhome, Office of Offshore Regulatory Programs, Regulations and Standards Branch at (703) 787–1587.

SUPPLEMENTARY INFORMATION: The MMS uses standards, specifications, and recommended practices developed by standard-setting organizations and the oil and gas industry as a means of establishing requirements for activities on the OCS. This practice, known as incorporation by reference, allows us to incorporate the provisions of technical standards into the regulations. The legal effect of incorporation by reference is that the material is treated as if the entire document were published in the **Federal Register.** This material, like any other properly issued regulation, then has the force and effect of law. We hold operators/lessees accountable for complying with the documents incorporated by reference in our regulations. We currently incorporate by reference 97 private sector consensus standards into the offshore operating regulations. The regulations at 1 CFR part 51 govern how we and other Federal agencies incorporate various documents by reference. Agencies may only incorporate a document by reference by publishing the document title and affirmation/reaffirmation date in the **Federal Register.** Agencies must also gain approval from the Director of the **Federal Register** for each publication incorporated by reference. Incorporation by reference of a document or publication is limited to the specific edition, supplement, or addendum cited in the regulations.

This rule adds the following API document to those currently incorporated by reference in MMS regulations:

ANSI/API Specification 14A, Specification for Subsurface Safety Valve Equipment, Eleventh Edition, October 2005, Effective Date: May 1, 2006; also available as ISO 10432: 2004, Product No. GX14A11.

The MMS has reviewed this document and determined that incorporating it into regulations ensures that industry uses the best available and safest technologies for downhole safety valves.

This final rule updates the requirements for subsurface safety valves operating in high pressure, high temperature (HPHT) environments in 30 CFR part 250 Subpart A—General and Subpart H—Oil and Gas Production Safety Systems. Subpart A is amended to incorporate by reference *ANSI/API Specification 14A, Specification for Subsurface Safety Valve (SSSV) Equipment.* The MMS is also adding a new section (30 CFR 250.807) to Subpart H that identifies additional safety valve information requirements for HPHT environments.

The Eleventh Edition of API Spec. 14A contains significant technological and design changes that will increase the safety of downhole operations in the Outer Continental Shelf (OCS). The updated API Spec. 14A is an improvement over the current API Spec. 14A, Tenth Edition, incorporated in the regulations because it does the following:

• Strengthens the guidelines for preparation of a functional specification by the user/purchaser to submit to the manufacturer/supplier when ordering equipment addressed by this standard. Functional characteristics in the specification must include, but are not limited to, well parameters, operational parameters, environmental

compatibility, and compatibility with related well equipment.

- Adds new design verification and validation guidelines.
- Clarifies procedures in areas such as design methodology and verification.
- Introduces state-of-the-art technological advances to improve downhole performance.

Comments on the proposed rule: On June 12, 2008, MMS published a rule proposing to incorporate the Eleventh Edition of API Spec 14A and to add a new section to the regulations identifying additional safety valve information requirements for HPHT conditions (73 FR 33333). The public comment period ended on August 11, 2008. The MMS received only two comments on the proposed rule; one comment was received from Baker Oil Tools and the other comment was received from the Offshore Operators Committee (OOC). You may view these comments on MMS's Web site at: *http://www.mms.gov/federalregister/PublicComments/AD45ReqSubsurfaceSafetyValveEquip.htm.*

Discussion of Comments

Comment: Baker Oil Tools (Baker) supports MMS's proposal to incorporate API Spec 14A into the regulations. The comment stated that Baker supports the proposal to revise 30 CFR § 250.806 to accept the Eleventh Edition of API Spec14A (and its specified functional test provisions) for safety valves in use in OCS waters. Baker also supports the proposal to require that Operators provide new information when submitting an Application for Permit to Drill (APD), an Application for Permit to Modify (APM), or a Deepwater Operations Plan (DWOP) that demonstrates the SSSV and related equipment are fit-for-service for performing in HPHT environments. Baker believes that the current design verification and validation activities specified in the Eleventh Edition of API Spec14A, which has been in effect since May 1, 2006, have and will continue to reasonably ensure that products are fit-for-service in all pressure and temperature environments.

Response: The MMS fully agrees with the comment by Baker supporting the incorporation of API Spec 14A and the requirement for new information that demonstrates the SSSV is fit-for-service.

Comment: The Offshore Operators Committee (OOC) wanted MMS to delete or clarify HPHT condition No. 1 in § 250.807, Additional requirements for subsurface safety valves installed in HPHT. The OOC stated that condition No. 1, which describes the "HPHT environment," is confusing as it is currently worded. The commenter asked what does condition No. 1 cover that environment condition No. 2 does not already cover? The OOC further stated that basing the rule on "HPHT environment" (defined as the pressures and temperatures at the wellhead whether a surface wellhead or subsea wellhead) is not necessarily appropriate for the "related" equipment, including the SSSV. The OOC suggested that it will be more appropriate to define "HPHT environment" by the anticipated worst case service conditions at each piece of related equipment. When the significant physical distance between the related equipment and the wellhead is combined with the anticipated fluid gradients and temperature gradients, it can result in conditions that push related equipment into greater than 15,000 pounds per square inch gauge (psig), or greater than 350 degrees Fahrenheit—conditions in wells that may not be considered an HPHT environment by the current wording. Wells/environments that will not fall into the categorization of HPHT, as the rule is currently drafted, could actually need related equipment that is greater than 15,000 psig, or 350 degrees Fahrenheit rated working pressure. As written, the rule could be interpreted such that, in these applications, it will not be necessary for operators to supply supporting design verification for this related equipment (greater than 15,000 psig, or 350 degrees Fahrenheit rated working pressure equipment), unless the pressures or temperatures at the wellhead are deemed to be an HPHT environment. If it is intended that operators planning to use related equipment greater than 15,000 psig, or 350 degrees Fahrenheit working pressure provide design verification, then this should be clearly conveyed.

Response: The MMS revised the language in § 250.807 based on OOC's comment to add clarity and specificity to condition No. 1 that describes the "HPHT environment."

Final Rule Requirements

The new § 250.807 provisions will require the lessee or operator to provide additional information when SSSVs and related equipment are intended to be installed in an HPHT environment. The lessee or operator will be required to include such information in an APD, APM, or DWOP and must demonstrate that the SSSV and related equipment are fit-for-service for performing in HPHT environments. For the purpose of this rulemaking, HPHT exists in any of the following conditions:

1. The completion of the well requires completion equipment or well control equipment with a pressure rating greater than 15,000 psig or a temperature rating greater than 350 degrees Fahrenheit;
2. The maximum anticipated surface pressure or shut-in tubing pressure is greater than 15,000 psig on the seafloor for a well with a subsea wellhead or at the surface for a well with a surface wellhead; or
3. The flowing temperature is equal to or greater than 350 degrees Fahrenheit on the seafloor for a well with a subsea wellhead or the surface for a well with a surface wellhead.

Related equipment refers to wellheads, tubing heads, tubulars, packers, threaded connections, seals, seal assemblies, production trees, equipment associated with coiled tubing, snubbing, operations, chokes, well control equipment, and any other equipment that will be exposed to rated working pressures greater than 15,000 psig or temperatures greater than 350 degrees Fahrenheit.

Procedural Matters

Regulatory Planning and Review (Executive Order (E.O.) 12866)

This final rule is not a significant rule and is not subject to review by the Office of Management and Budget (OMB) under E.O. 12866.

(1) The final rule will not have an annual effect of $100 million or more on the economy. It will not adversely affect in a material way the economy, productivity, competition, jobs, the environment, public health or safety, or State, local, or tribal governments or communities. The primary purpose of this final rule is to establish minimum acceptable requirements for SSSVs. The requirements apply to SSSVs, as well as all components that establish tolerance and/or clearances that may affect performance or interchangeability of SSSVs. This rule also will set minimum requirements for SSSVs and related equipment to conform to international standards. Finally, this rule will establish minimum fitness-for-service criteria for HPHT equipment operating over 15,000 psig or 350 degrees Fahrenheit and will require lessees and operators to provide information that demonstrates to the MMS that their SSSVs are properly designed to operate in HPHT environments.

The oil and gas industry took the lead in revising API Spec 14A, Eleventh Edition. The industry and API have encouraged the promulgation of the final rule incorporating API Spec 14A. The API Spec 14A standard is now accepted as an industry standard both

domestically and internationally; consequently, the impact of this final rule on the oil and gas industry is expected to be negligible.

The impact of the new requirements of § 250.807 will also be negligible. A review of drilling activity indicates that, if the current trend continues, there may not be any HPHT wells that exceed 15,000 psig at the wellhead drilled and completed in the next 3 years. However, there is activity in the Mobile Bay region and in the western Gulf of Mexico where the working environment for SSSVs and related equipment may reach over 350 degrees Fahrenheit, flowing tubing temperature. The MMS estimates that a maximum of 20 APDs or APMs that could be subject to the final rule may be submitted by lessees or operators over the next 3 years. These submittals will be required to provide additional information on SSSVs and related equipment for wells to be drilled and completed that may be classified as HPHT completions.

Section 250.807 will require lessees and operators to provide supporting design verification information. This is the kind of information that a prudent operator should have available for operating in HPHT environments. Companies will be required to gather and present well data that should be readily available if requested by MMS for review. We estimate that the hourly burden to produce this data will be approximately 40 hours for each well at an hourly rate of $100 per hour, totaling $4,000 per well (40 hours × $100 per hour × 1 well = $4,000).

The estimated cost to industry over the next 3 years, based on the high estimate of 20 APDs or APMs per year, will be approximately $80,000 ($4,000 per well × 20 wells = $80,000). This additional cost associated with implementing these new requirements will be negligible in relation to the overall cost of offshore oil and gas production. Additional costs could be incurred if a lessee engages an independent consultant to prepare the fitness-for-service report for the application to install SSSVs and related equipment in an HPHT environment with readily available information. However, these costs are very small when compared to the cost of drilling a well in an HPHT environment, which can cost over $150 million.

(2) The final rule will not create a serious inconsistency or otherwise interfere with action taken or planned by another agency.

(3) This final rule will not alter the budgetary effects of entitlements, grants, user fees, or loan programs or the rights or obligations of their recipients.

(4) This final rule will not raise novel legal or policy issues. The final rule simply seeks to improve MMS safety regulations by updating them with improved oil and gas industry standards and requires lessees and operators to demonstrate that SSSVs and related equipment are fit-for-service in HPHT environments.

Regulatory Flexibility Act

The Department of the Interior certifies that this final rule will not have a significant economic effect on a substantial number of small entities under the Regulatory Flexibility Act (5 U.S.C. 601 *et seq.*).

The new API Spec 14A will affect lessees and operators of oil and gas leases in the OCS. This includes approximately 130 active Federal oil and gas lessees. Lessees that conduct business under this rule are coded under the Small Business Administration's (SBA) North American Industry Classification System (NAICS) codes 211111, Crude Petroleum and Natural Gas Extraction, and 213111, Drilling Oil and Gas Wells. For these NAICS code classifications, a small company is defined as one with fewer than 500 employees. Based on this criterion, an estimated 70 percent of these companies are considered small. Therefore, this final rule will affect a substantial number of small entities. This final rule will not, however, have a significant economic effect on a substantial number of small companies because the revised API Spec 14A will not impose significant costs or burdens on any lessees or operators.

With respect to the new § 250.807, the MMS has determined that it is unlikely that a substantial number of small companies are currently involved with HPHT wells in the OCS due to the expense and the advanced technical expertise needed for drilling, completing, and producing HPHT wells. Because very few, if any, small companies will be involved in the activities that will require compliance with these additional requirements for HPHT wells, the costs of the additional requirements will not have a significant economic effect on a substantial number of small companies. Furthermore, as mentioned previously, the costs of complying with these final requirements are very small when compared to the cost of drilling an HPHT well, which can cost over $150 million.

Your comments are important. The Small Business and Agriculture Regulatory Enforcement Ombudsman and 10 Regional Fairness Boards were established to receive comments from small business about Federal agency enforcement actions. The Ombudsman will annually evaluate the enforcement activities and rate each agency's responsiveness to small business. If you wish to comment on the enforcement actions of the MMS, call toll-free 1–888–734–3247. You may submit comments to the Small Business Administration without concern for retaliation. Allegations of discrimination/retaliation filed with the Small Business Administration will be investigated for appropriate action.

Small Business Regulatory Enforcement Fairness Act

The final rule is not a major rule under 5 U.S.C. 804(2) of the Small Business Regulatory Enforcement Fairness Act. This final rule:

a. Will not have an annual effect on the economy of $100 million or more. The final rule will not impose any significant costs to lessees or operators. The main purpose of this rule is to update an industry standard that will ensure lessees use the best available and safest technologies for downhole safety valves. The costs associated with the final rule will involve the cost of the new document (API Spec 14A), and any cost associated with gathering and presenting the well data required by the new § 250.807 to MMS. As mentioned previously, the costs of complying with these requirements are very small when compared to the cost of drilling an HPHT well, which can cost over $150 million.

b. Will not cause a major increase in costs or prices for consumers, individual industries, Federal, State, or local government agencies, or geographic regions.

c. Will not have significant adverse effects on competition, employment, investment, productivity, innovation, or the ability of U.S.-based enterprises to compete with foreign-based enterprises.

Unfunded Mandates Reform Act of 1995

This final rule will not impose an unfunded mandate on State, local, or tribal governments or the private sector of more than $100 million per year. The final rule will not have a significant or unique effect on State, local, or tribal governments or the private sector. A statement containing the information required by the Unfunded Mandates Reform Act (2 U.S.C. 1501 *et seq.*) is not required.

Takings Implication Assessment (E.O. 12630)

Under the criteria in E.O. 12630, this final rule does not have significant takings implications. The final rule is

not a governmental action capable of interference with constitutionally protected property rights. A Takings Implication Assessment is not required.

Federalism (E.O. 13132)

Under the criteria in E.O. 13132, this final rule does not have federalism implications. This final rule will not substantially and directly affect the relationship between the Federal and State governments. To the extent that State and local governments have a role in OCS activities, this final rule will not affect that role. A Federalism Assessment is not required.

Civil Justice Reform (E.O. 12988)

This rule complies with the requirements of E.O. 12988. Specifically, this rule:

(a) Meets the criteria of section 3(a) requiring that all regulations be reviewed to eliminate errors and ambiguity and be written to minimize litigation; and

(b) Meets the criteria of section 3(b)(2) requiring that all regulations be written in clear language and contain clear legal standards.

Consultation With Indian Tribes (E.O. 13175)

Under the criteria in E.O. 13175, we have evaluated this final rule and determined that it has no substantial effects on federally recognized Indian tribes. There are no Indian or tribal lands in the OCS.

Paperwork Reduction Act (PRA)

The final revisions to 30 CFR 250, subpart H regulations (§ 250.807) will specify that lessees and operators must submit a detailed description in their APD, APM, or DWOP when SSSVs and related equipment are intended to perform in HPHT environments. The information that will be required by the final rule should be readily available since a prudent operator will already possess this information for daily operations. Lessees and operators must then provide this existing information as part of their APD, APM, or DWOP submissions. The MMS has determined that the number of hours of paperwork burdens currently approved for preparation of APDs (3,135 annual burden hours) and APMs (9,900 annual burden hours) pursuant to the requirements set forth in 30 CFR 250, subpart D (OMB Control Number 1010–0141) and for DWOPs (51,000 annual burden hours) in 30 CFR 250, subpart B (OMB Control Number 1010–0151), are more than enough to accommodate this minor addition to existing submissions. Therefore, due to the fact that the burden hours are effectively included under currently approved OMB information collections, the final rule does not require a submission to OMB for review and approval under section 3507(d) of the PRA (44 USC 3501 *et seq.*).

The PRA provides that an agency may not conduct or sponsor a collection of information unless it displays a currently valid OMB control number. Until OMB approves a collection of information and assigns a control number, you are not required to respond. The OMB approved the referenced information collection requirements for 30 CFR 250, subparts B, D, and H under OMB Control Numbers 1010–0151 (321,817 hours; expiration 7/31/08), 1010–0141 (163,954 hours; expiration 8/31/08) and 1010–0059 (17,598 hours; expiration 2/28/09).

National Environmental Policy Act of 1969

This rule does not constitute a major Federal action significantly affecting the quality of the human environment. The MMS has analyzed this final rule under the criteria of the National Environmental Policy Act and implementing regulations. This final rule meets the criteria set forth in 516 Departmental Manual 15.4(C)(1) for an MMS "Categorical Exclusion" in that its impacts are limited to administrative, economic, or technological effects. Further, the MMS has analyzed this final rule to determine if it involves any of the extraordinary circumstances that would require an environmental assessment or an environmental impact statement as set forth in 43 CFR § 46.215 and concluded that it does not.

Data Quality Act

In developing this rule, we did not conduct or use a study, experiment, or survey requiring peer review under the Data Quality Act (Pub. L. 106–554, app. C § 515, 114 Stat. 2763, 2763A–153–154).

Effects on the Energy Supply (E.O. 13211)

This rule is not a significant energy action under the definition in E.O. 13211. A Statement of Energy Effects is not required.

List of Subjects in 30 CFR Part 250

Continental shelf, Environmental protection, Incorporation by reference, Public lands—mineral resources, Reporting and recordkeeping requirements.

Dated: December 24, 2009.

Ned Farquhar,

Acting Assistant Secretary—Land and Minerals Management.

■ For the reasons stated in the preamble, the Minerals Management Service (MMS) amends 30 CFR part 250 as follows:

PART 250—OIL AND GAS AND SULPHUR OPERATIONS IN THE OUTER CONTINENTAL SHELF

■ 1. The authority citation for part 250 continues to read as follows:

Authority: 31 U.S.C. 9701, 43 U.S.C. 1334.

■ 2. In § 250.198(e), revise the entry for API Spec 14A to read as follows:

§ 250.198 Documents incorporated by reference.

* * * * *

(e) * * *

Title of documents	Incorporated by reference at
* * * * * * *	
ANSI/API Specification 14A, Specification for Subsurface Safety Valve Equipment, Eleventh Edition, October 2005, Effective Date: May 1, 2006; also available as ISO 10432: 2004, Product No. GX14A11	§ 250.806(a)(3).
* * * * * * *	

■ 3. In § 250.806, remove the last sentence in paragraph (a)(3), and add two sentences in its place to read as follows:

§ 250.806 Safety and pollution prevention equipment quality assurance requirements.

(a) * * *

(3) * * * All SSSVs must meet the technical specifications of API Specification 14A (incorporated by reference as specified in § 250.198). However, SSSVs and related equipment planned to be used in high pressure high temperature environments must meet the additional requirements set forth in § 250.807.

* * * * *

■ 4. Redesignate § 250.807 as § 250.808.

■ 5. Add new § 250.807 to read as follows:

§ 250.807 Additional requirements for subsurface safety valves and related equipment installed in high pressure high temperature (HPHT) environments.

(a) If you plan to install SSSVs and related equipment in an HPHT environment, you must submit detailed information with your Application for Permit to Drill (APD), Application for Permit to Modify (APM), or Deepwater Operations Plan (DWOP) that demonstrates the SSSVs and related equipment are capable of performing in the applicable HPHT environment. Your detailed information must include the following:

(1) A discussion of the SSSVs' and related equipment's design verification analysis;

(2) A discussion of the SSSVs' and related equipment's design validation and functional testing process and procedures used; and

(3) An explanation of why the analysis, process, and procedures ensure that the SSSVs and related equipment are fit-for-service in the applicable HPHT environment.

(b) For this section, HPHT environment means when one or more of the following well conditions exist:

(1) The completion of the well requires completion equipment or well control equipment assigned a pressure rating greater than 15,000 psig or a temperature rating greater than 350 degrees Fahrenheit;

(2) The maximum anticipated surface pressure or shut-in tubing pressure is greater than 15,000 psig on the seafloor for a well with a subsea wellhead or at the surface for a well with a surface wellhead; or

(3) The flowing temperature is equal to or greater than 350 degrees Fahrenheit on the seafloor for a well with a subsea wellhead or at the surface for a well with a surface wellhead.

(c) For this section, related equipment includes wellheads, tubing heads, tubulars, packers, threaded connections, seals, seal assemblies, production trees, chokes, well control equipment, and any other equipment that will be exposed to the HPHT environment.

[FR Doc. 2010–124 Filed 1–8–10; 8:45 am]

BILLING CODE 4310–MR–P

POSTAL REGULATORY COMMISSION

39 CFR Part 3020

[Docket Nos. MC2010–6 and CP2010–6; Order No. 360]

New Postal Product

AGENCY: Postal Regulatory Commission.

ACTION: Final rule.

SUMMARY: The Commission is adding Express Mail Contract 6 to the Competitive Product List. This action is consistent with changes in a recent law governing postal operations. Republication of the lists of market dominant and competitive products is also consistent with new requirements in the law.

DATES: Effective January 11, 2010 and is applicable beginning December 15, 2009.

FOR FURTHER INFORMATION CONTACT: Stephen L. Sharfman, General Counsel, 202–789–6820 or *stephen.sharfman@prc.gov.*

SUPPLEMENTARY INFORMATION: *Regulatory History*, 74 FR 57537 (November 6, 2009).

I. Introduction
II. Background
III. Comments
IV. Commission Analysis
V. Ordering Paragraphs

I. Introduction

The Postal Service seeks to add a new product identified as Express Mail Contract 6 to the Competitive Product List. For the reasons discussed below, the Commission approves the Request.

II. Background

At the end of October 2009, the Postal Service filed a formal request and associated supporting information pursuant to 39 U.S.C. 3642 and 39 CFR 3020.30 *et seq.* to add Express Mail Contract 6 to the Competitive Product List.[1] The Postal Service asserts that the Express Mail Contract 6 product is a competitive product "not of general applicability" within the meaning of 39 U.S.C. 3632(b)(3). This Request has been assigned Docket No. MC2010–6.

The Postal Service contemporaneously filed a contract related to the proposed new product pursuant to 39 U.S.C. 3632(b)(3) and 39 CFR 3015.5. The contract has been assigned Docket No. CP2010–6.

In support of its Request, the Postal Service filed the following materials: (1) A redacted version of the Governors' Decision authorizing certain types of Express Mail contracts;[2] (2) a redacted version of the contract;[3] (3) a requested change in the Mail Classification Schedule product list;[4] (4) a Statement of Supporting Justification as required by 39 CFR 3020.32;[5] (5) a certification of compliance with 39 U.S.C. 3633(a);[6] and (6) an application for non-public treatment of the materials filed under seal.[7] The redacted version of the contract provides that the contract is terminable on 30 days' notice by either party, but could continue for 3 years from the effective date subject to annual price adjustments. Request, Attachment B.

In the Statement of Supporting Justification, Mary Prince Anderson, Acting Manager, Sales and Communications, Expedited Shipping, asserts that the service to be provided under the contract will cover its attributable costs, make a positive contribution to coverage of institutional costs, and will increase contribution toward the requisite 5.5 percent of the Postal Service's total institutional costs. Request, Attachment D, at 1. W. Ashley Lyons, Manager, Regulatory Reporting and Cost Analysis, Finance Department, certifies that the contract complies with 39 U.S.C. 3633(a). *Id.*, Attachment E.

The Postal Service filed much of the supporting materials, including the supporting data and the unredacted contract, under seal. The Postal Service maintains that the contract and related financial information, including the customer's name and the accompanying analyses that provide prices, certain terms and conditions, and financial

[1] Request of the United States Postal Service to Add Express Mail Contract 6 to Competitive Product List and Notice of Filing (Under Seal) of Contract and Supporting Data, October 28, 2009 (Request). On October 29, 2009, the Postal Service filed errata to its Request. See Notice of the United States Postal Service of Filing Errata to Request and Notice, October 29, 2009. Accordingly, the filing of the entire set of documents related to this Request was not completed until October 29, 2009.

[2] Attachment A to the Request, reflecting Governors' Decision No. 09–14, October 26, 2009.

[3] Attachment B to the Request.

[4] Attachment C to the Request.

[5] Attachment D to the Request.

[6] Attachment E to the Request.

[7] Attachment F to the Request.

projections, should remain confidential. *Id.*, Attachment F, at 2–3.[8]

In Order No. 330, the Commission gave notice of the two dockets, appointed a public representative, and provided the public with an opportunity to comment.[9] On November 2, 2009, Chairman's Information Request No. 1 (CHIR No. 1) was filed. The due date for responding to CHIR No. 1 was set as November 9, 2009. On November 13, 2009, the Postal Service filed a partial response to CHIR No. 1.[10] Seeking clarification of information contained in the Postal Service's November 13, 2009 partial response, Chairman's Information Request No. 2 (CHIR No. 2) was filed on November 16, 2009.[11] The Postal Service responded to CHIR No. 2 on November 19, 2009.[12] On December 9, 2009, the Postal Service filed its response to the outstanding questions in CHIR No. 1.[13]

III. Comments

Comments were timely filed by the Public Representative on November 9, 2009.[14] No comments were submitted by other interested parties. The Public Representative states that the Postal Service's filing meets the pertinent provisions of title 39 and the relevant Commission rules. *Id.* at 1–3. He further states that the agreement is fair to the parties and employs pricing terms favorable to the customer, the Postal Service, and thereby, the public. *Id.* at 4–5. The Public Representative also believes that the Postal Service has provided appropriate justification for maintaining confidentiality in this case. *Id.* at 3.

IV. Commission Analysis

The Commission has reviewed the Request, the contract, the financial analysis provided under seal that accompanies the Request, the responses to CHIR Nos. 1 and 2, and the comments filed by the Public Representative.

Statutory requirements. The Commission's statutory responsibilities in this instance entail assigning Express Mail Contract 6 to either the Market Dominant Product List or to the Competitive Product List. 39 U.S.C. 3642. As part of this responsibility, the Commission also reviews the proposal for compliance with the Postal Accountability and Enhancement Act (PAEA) requirements. This includes, for proposed competitive products, a review of the provisions applicable to rates for competitive products. 39 U.S.C. 3633.

Product list assignment. In determining whether to assign Express Mail Contract 6 as a product to the Market Dominant Product List or the Competitive Product List, the Commission must consider whether

> the Postal Service exercises sufficient market power that it can effectively set the price of such product substantially above costs, raise prices significantly, decrease quality, or decrease output, without risk of losing a significant level of business to other firms offering similar products.

39 U.S.C. 3642(b)(1). If so, the product will be categorized as market dominant. The competitive category of products consists of all other products.

The Commission is further required to consider the availability and nature of enterprises in the private sector engaged in the delivery of the product, the views of those who use the product, and the likely impact on small business concerns. 39 U.S.C. 3642(b)(3).

The Postal Service asserts that its bargaining position is constrained by the existence of other shippers who can provide similar services, thus precluding it from taking unilateral action to increase prices without the risk of losing volume to private companies. Request, Attachment D, para. (d). The Postal Service also contends that it may not decrease quality or output without risking the loss of business to competitors that offer similar expedited delivery services. *Id.* It further states that the contract partner supports the addition of the contract to the Competitive Product List to effectuate the negotiated contractual terms. *Id.*, para. (g). Finally, the Postal Service states that the market for expedited delivery services is highly competitive and requires a substantial infrastructure to support a national network. It indicates that large carriers serve this market. Accordingly, the Postal Service states that it is unaware of any small business concerns that could offer comparable service for this customer. *Id.*, para. (h).

No commenter opposes the proposed classification of Express Mail Contract 6 as competitive. Having considered the statutory requirements and the support offered by the Postal Service, the Commission finds that Express Mail Contract 6 is appropriately classified as a competitive product and should be added to the Competitive Product List.

Cost considerations. In its initial filings, the Postal Service presented an incomplete financial analysis of Express Mail Contract 6. The incomplete initial filings did not allow the Commission to undertake the required analysis of Express Mail Contract 6 until the Postal Service fully responded to CHIR Nos. 1 and 2. Because the Postal Service did not fully respond to CHIR No. 1 until December 9, 2009, the Commission could not begin its analysis until that time. Even then, further informal follow-up to the Postal Service's responses to CHIR No. 1 were necessary for a complete understanding of the data.

Based on the data and explanations submitted, the Commission finds that Express Mail Contract 6 should cover its attributable costs (39 U.S.C. 3633(a)(2)), should not lead to the subsidization of competitive products by market dominant products (39 U.S.C. 3633(a)(1)), and should have a positive effect on competitive products' contribution to institutional costs (39 U.S.C. 3633(a)(3)). Thus, an initial review of proposed Express Mail Contract 6 indicates that it comports with the provisions applicable to rates for competitive products. The Commission's analysis is provided in Library Reference PRC-CP2010–6–NP-LR1 which is being filed under seal.

Other considerations. The Postal Service shall notify the Commission if termination occurs prior to the scheduled termination date. Following the scheduled termination date of the

[8] In its application for non-public treatment, the Postal Service requests an indefinite extension of non-public treatment of customer-identifying information. *Id.* at 7. For the reasons discussed in PRC Order No. 323, that request is denied. *See, e.g.*, Docket No. MC2010–1 and CP2010–1, Order Concerning Priority Mail Contract 19 Negotiated Service Agreement, October 26, 2009 (Order No. 323).

[9] PRC Order No. 330, Notice and Order Concerning Express Mail Contract 6 Negotiated Service Agreement, October 30, 2009 (Order No. 330).

[10] Notice of the United States Postal Service of Filing Responses to Chairman's Information Request No. 1, Question 1, Subparts (b)-(d), Under Seal, November 13, 2009 (Partial Response to CHIR No. 1). With its Partial Response to CHIR No. 1, the Postal Service also filed a motion for late acceptance which contained an explanation of the reason for the delay and the issues with responding to the remaining information requests. Motion of the United States Postal Service for Late Acceptance of Responses to Chairman's Information Request No. 1, November 13, 2009. The motion is granted.

[11] Notice of Filing of Chairman's Information Request No. 2 Under Seal, November 16, 2009.

[12] Notice of the United States Postal Service of Filing Response to Chairman's Information Request No. 2, Under Seal, November 19, 2009.

[13] Notice of the United States Postal Service of Filing Response to Chairman's Information Request No. 1, Question 1(a), Under Seal, December 9, 2009 (Remaining Response to CHIR No. 1). With its Remaining Response to CHIR No. 1, the Postal Service filed a motion for late acceptance of that response. Motion of the United States Postal Service for Late Acceptance of Response to Chairman's Information Request No. 1, Question 1(a), December 9, 2009. The motion is granted, although the Postal Service should be aware that the significant delay in the Commission's decision in this case is directly related to the delay in the Postal Service's filing of this response.

[14] Public Representative Comments in Response to United States Postal Service Request to Add Express Mail Contract 6 to the Competitive Product List, November 9, 2009 (Public Representative Comments).

agreement, the Commission will remove the product from the Competitive Product List.

Further, while the Commission currently believes that the contract is expected to comply with the applicable requirements of 39 U.S.C. 3633, the Commission seeks to ensure that it is provided with the proper level of detail to make appropriate findings in the FY 2010 Annual Compliance Determination (ACD) with respect to this contract. To that end, the Postal Service should view Library Reference PRC-CP2010–6–NP-LR1 as illustrative of the granularity of the information to be reported with respect to this contract.

In conclusion, the Commission approves Express Mail Contract 6 as a new product. The revision to the Competitive Product List is shown below the signature of this Order and is effective upon issuance of this Order.

V. Ordering Paragraphs

It is ordered:

1. Express Mail Contract 6 (MC2010–6 and CP2010–6) is added to the Competitive Product List as a new product under Negotiated Service Agreements, Domestic.

2. The Postal Service shall notify the Commission if termination occurs prior to the scheduled termination date.

3. The Postal Service shall view Library Reference PRC-CP2010–6–NP-LR1 as illustrative of the level of detail of information that the Commission seeks with respect to this contract in connection with the FY 2010 Annual Compliance Determination proceeding.

4. The Secretary shall arrange for the publication of this order in the **Federal Register**.

List of Subjects in 39 CFR Part 3020

Administrative practice and procedure; Postal Service.

By the Commission.

Shoshana M. Grove,

Secretary.

■ For the reasons discussed in the preamble, the Postal Regulatory Commission amends chapter III of title 39 of the Code of Federal Regulations as follows:

PART 3020—PRODUCT LISTS

■ 1. The authority citation for part 3020 continues to read as follows:

Authority: Authority: 39 U.S.C. 503; 3622; 3631; 3642; 3682.

■ 2. Revise Appendix A to Subpart A of Part 3020–Mail Classification Schedule to read as follows:

Appendix A to Subpart A of Part 3020—Mail Classification Schedule

Part A—Market Dominant Products

1000 Market Dominant Product List
First-Class Mail
- Single-Piece Letters/Postcards
- Bulk Letters/Postcards
- Flats
- Parcels
- Outbound Single-Piece First-Class Mail International*COM041*
- Inbound Single-Piece First-Class Mail International

Standard Mail (Regular and Nonprofit)
- High Density and Saturation Letters
- High Density and Saturation Flats/Parcels
- Carrier Route
- Letters
- Flats
- Not Flat-Machinables (NFMs)/Parcels

Periodicals
- Within County Periodicals
- Outside County Periodicals

Package Services
- Single-Piece Parcel Post
- Inbound Surface Parcel Post (at UPU rates)
- Bound Printed Matter Flats
- Bound Printed Matter Parcels
- Media Mail/Library Mail

Special Services
- Ancillary Services
- International Ancillary Services
- Address List Services
- Caller Service
- Change-of-Address Credit Card Authentication
- Confirm
- International Reply Coupon Service
- International Business Reply Mail Service
- Money Orders
- Post Office Box Service

Negotiated Service Agreements
- HSBC North America Holdings Inc. Negotiated Service Agreement
- Bookspan Negotiated Service Agreement
- Bank of America Corporation Negotiated Service Agreement
- The Bradford Group Negotiated Service Agreement
- Inbound International
  - Canada Post—United States Postal Service Contractual Bilateral Agreement for Inbound Market Dominant Services

Market Dominant Product Descriptions
First-Class Mail
[Reserved for Class Description]
- Single-Piece Letters/Postcards
  - [Reserved for Product Description]
- Bulk Letters/Postcards
  - [Reserved for Product Description]
- Flats
  - [Reserved for Product Description]
- Parcels
  - [Reserved for Product Description]
- Outbound Single-Piece First-Class Mail International
  - [Reserved for Product Description]
- Inbound Single-Piece First-Class Mail International
  - [Reserved for Product Description]

Standard Mail (Regular and Nonprofit)
[Reserved for Class Description]
- High Density and Saturation Letters
  - [Reserved for Product Description]
- High Density and Saturation Flats/Parcels
  - [Reserved for Product Description]
- Carrier Route
  - [Reserved for Product Description]
- Letters
  - [Reserved for Product Description]
- Flats
  - [Reserved for Product Description]
- Not Flat-Machinables (NFMs)/Parcels
  - [Reserved for Product Description]

Periodicals
[Reserved for Class Description]
- Within County Periodicals
  - [Reserved for Product Description]
- Outside County Periodicals
  - [Reserved for Product Description]

Package Services
[Reserved for Class Description]
- Single-Piece Parcel Post
  - [Reserved for Product Description]
- Inbound Surface Parcel Post (at UPU rates)
  - [Reserved for Product Description]
- Bound Printed Matter Flats
  - [Reserved for Product Description]
- Bound Printed Matter Parcels
  - [Reserved for Product Description]
- Media Mail/Library Mail
  - [Reserved for Product Description]

Special Services
[Reserved for Class Description]
- Ancillary Services
  - [Reserved for Product Description]
- Address Correction Service
  - [Reserved for Product Description]
- Applications and Mailing Permits
  - [Reserved for Product Description]
- Business Reply Mail
  - [Reserved for Product Description]
- Bulk Parcel Return Service
  - [Reserved for Product Description]
- Certified Mail
  - [Reserved for Product Description]
- Certificate of Mailing
  - [Reserved for Product Description]
- Collect on Delivery
  - [Reserved for Product Description]
- Delivery Confirmation
  - [Reserved for Product Description]
- Insurance
  - [Reserved for Product Description]
- Merchandise Return Service
  - [Reserved for Product Description]
- Parcel Airlift (PAL)
  - [Reserved for Product Description]
- Registered Mail
  - [Reserved for Product Description]
- Return Receipt
  - [Reserved for Product Description]
- Return Receipt for Merchandise
  - [Reserved for Product Description]
- Restricted Delivery
  - [Reserved for Product Description]
- Shipper-Paid Forward
  - [Reserved for Product Description]
- Signature Confirmation
  - [Reserved for Product Description]
- Special Handling
  - [Reserved for Product Description]
- Stamped Envelopes

[Reserved for Product Description]
Stamped Cards
[Reserved for Product Description]
Premium Stamped Stationery
[Reserved for Product Description]
Premium Stamped Cards
[Reserved for Product Description]
International Ancillary Services
[Reserved for Product Description]
International Certificate of Mailing
[Reserved for Product Description]
International Registered Mail
[Reserved for Product Description]
International Return Receipt
[Reserved for Product Description]
International Restricted Delivery
[Reserved for Product Description]
Address List Services
[Reserved for Product Description]
Caller Service
[Reserved for Product Description]
Change-of-Address Credit Card Authentication
[Reserved for Product Description]
Confirm
[Reserved for Product Description]
International Reply Coupon Service
[Reserved for Product Description]
International Business Reply Mail Service
[Reserved for Product Description]
Money Orders
[Reserved for Product Description]
Post Office Box Service
[Reserved for Product Description]
Negotiated Service Agreements
[Reserved for Class Description]
HSBC North America Holdings Inc. Negotiated Service Agreement
[Reserved for Product Description]
Bookspan Negotiated Service Agreement
[Reserved for Product Description]
Bank of America Corporation Negotiated Service Agreement
The Bradford Group Negotiated Service Agreement
Part B—Competitive Products
2000 Competitive Product List
Express Mail
Express Mail
Outbound International Expedited Services
Inbound International Expedited Services
Inbound International Expedited Services 1 (CP2008–7)
Inbound International Expedited Services 2 (MC2009–10 and CP2009–12)
Priority Mail
Priority Mail
Outbound Priority Mail International
Inbound Air Parcel Post
Royal Mail Group Inbound Air Parcel Post Agreement
Parcel Select
Parcel Return Service
International
International Priority Airlift (IPA)
International Surface Airlift (ISAL)
International Direct Sacks—M—Bags
Global Customized Shipping Services
Inbound Surface Parcel Post (at non-UPU rates)
Canada Post—United States Postal Service Contractual Bilateral Agreement for Inbound Competitive Services (MC2009–8 and CP2009–9)
International Money Transfer Service
International Ancillary Services
Special Services
Premium Forwarding Service
Negotiated Service Agreements
Domestic
Express Mail Contract 1 (MC2008–5)
Express Mail Contract 2 (MC2009–3 and CP2009–4)
Express Mail Contract 3 (MC2009–15 and CP2009–21)
Express Mail Contract 4 (MC2009–34 and CP2009–45)
Express Mail Contract 5 (MC2010–5 and CP2010–5)
Express Mail Contract 6 (MC2010–6 and CP2010–6)
Express Mail & Priority Mail Contract 1 (MC2009–6 and CP2009–7)
Express Mail & Priority Mail Contract 2 (MC2009–12 and CP2009–14)
Express Mail & Priority Mail Contract 3 (MC2009–13 and CP2009–17)
Express Mail & Priority Mail Contract 4 (MC2009–17 and CP2009–24)
Express Mail & Priority Mail Contract 5 (MC2009–18 and CP2009–25)
Express Mail & Priority Mail Contract 6 (MC2009–31 and CP2009–42)
Express Mail & Priority Mail Contract 7 (MC2009–32 and CP2009–43)
Express Mail & Priority Mail Contract 8 (MC2009–33 and CP2009–44)
Parcel Select & Parcel Return Service Contract 1 (MC2009–11 and CP2009–13)
Parcel Select & Parcel Return Service Contract 2 (MC2009–40 and CP2009–61)
Parcel Return Service Contract 1 (MC2009–1 and CP2009–2)
Priority Mail Contract 1 (MC2008–8 and CP2008–26)
Priority Mail Contract 2 (MC2009–2 and CP2009–3)
Priority Mail Contract 3 (MC2009–4 and CP2009–5)
Priority Mail Contract 4 (MC2009–5 and CP2009–6)
Priority Mail Contract 5 (MC2009–21 and CP2009–26)
Priority Mail Contract 6 (MC2009–25 and CP2009–30)
Priority Mail Contract 7 (MC2009–25 and CP2009–31)
Priority Mail Contract 8 (MC2009–25 and CP2009–32)
Priority Mail Contract 9 (MC2009–25 and CP2009–33)
Priority Mail Contract 10 (MC2009–25 and CP2009–34)
Priority Mail Contract 11 (MC2009–27 and CP2009–37)
Priority Mail Contract 12 (MC2009–28 and CP2009–38)
Priority Mail Contract 13 (MC2009–29 and CP2009–39)
Priority Mail Contract 14 (MC2009–30 and CP2009–40)
Priority Mail Contract 15 (MC2009–35 and CP2009–54)
Priority Mail Contract 16 (MC2009–36 and CP2009–55)
Priority Mail Contract 17 (MC2009–37 and CP2009–56)
Priority Mail Contract 18 (MC2009–42 and CP2009–63)
Priority Mail Contract 19 (MC2010–1 and CP2010–1)
Priority Mail Contract 20 (MC2010–2 and CP2010–2)
Priority Mail Contract 21 (MC2010–3 and CP2010–3)
Priority Mail Contract 22 (MC2010–4 and CP2010–4)
Priority Mail Contract 23 (MC2010–9 and CP2010–9)
Outbound International
Direct Entry Parcels Contracts
Direct Entry Parcels 1 (MC2009–26 and CP2009–36)
Global Direct Contracts (MC2009–9, CP2009–10, and CP2009–11)
Global Expedited Package Services (GEPS) Contracts
GEPS 1 (CP2008–5, CP2008–11, CP2008–12, CP2008–13, CP2008–18, CP2008–19, CP2008–20, CP2008–21, CP2008–22, CP2008–23, and CP2008–24)
Global Expedited Package Services 2 (CP2009–50)
Global Plus Contracts
Global Plus 1 (CP2008–8, CP2008–46 and CP2009–47)
Global Plus 2 (MC2008–7, CP2008–48 and CP2008–49)
Inbound International
Inbound Direct Entry Contracts with Foreign Postal Administrations
Inbound Direct Entry Contracts with Foreign Postal Administrations (MC2008–6, CP2008–14 and MC2008–15)
Inbound Direct Entry Contracts with Foreign Postal Administrations 1 (MC2008–6 and CP2009–62)
International Business Reply Service Competitive Contract 1 (MC2009–14 and CP2009–20)
Competitive Product Descriptions
Express Mail
[Reserved for Group Description]
Express Mail
[Reserved for Product Description]
Outbound International Expedited Services
[Reserved for Product Description]
Inbound International Expedited Services
[Reserved for Product Description]
Priority
[Reserved for Product Description]

Priority Mail
[Reserved for Product Description]
Outbound Priority Mail International
[Reserved for Product Description]
Inbound Air Parcel Post
[Reserved for Product Description]
Parcel Select
[Reserved for Group Description]
Parcel Return Service
[Reserved for Group Description]
International
[Reserved for Group Description]
International Priority Airlift (IPA)
[Reserved for Product Description]
International Surface Airlift (ISAL)
[Reserved for Prduct Description]
International Direct Sacks—M–Bags
[Reserved for Product Description]
Global Customized Shipping Services
[Reserved for Product Description]
International Money Transfer Service
[Reserved for Product Description]
Inbound Surface Parcel Post (at non-UPU rates)
[Reserved for Product Description]
International Ancillary Services
[Reserved for Product Description]
International Certificate of Mailing
[Reserved for Product Description]
International Registered Mail
[Reserved for Product Description]
International Return Receipt
[Reserved for Product Description]
International Restricted Delivery
[Reserved for Product Description]
International Insurance
[Reserved for Product Description]
Negotiated Service Agreements
[Reserved for Group Description]
Domestic
[Reserved for Product Description]
Outbound International
[Reserved for Group Description]
Part C—Glossary of Terms and Conditions [Reserved]
Part D—Country Price Lists for International Mail [Reserved]

[FR Doc. 2010–178 Filed 01–08–10; 8:45 am]

BILLING CODE 7710–FW–S

ENVIRONMENTAL PROTECTION AGENCY

40 CFR Part 52

[EPA–R09–OAR–2008–0341; FRL–9094–1]

Revisions to the California State Implementation Plan, Ventura County Air Pollution Control District

AGENCY: Environmental Protection Agency (EPA).

ACTION: Final rule.

SUMMARY: EPA is finalizing approval of revisions to the Ventura County Air Pollution Control District (VCAPCD) portion of the California State Implementation Plan (SIP). These revisions were proposed in the **Federal Register** on November 19, 2008 and concern the permitting of new or modified sources. We are approving local rules that regulate these procedures under the Clean Air Act as amended in 1990 (CAA or the Act).

DATES: *Effective Date:* This rule is effective on February 10, 2010.

ADDRESSES: EPA has established docket number EPA–R09–OAR–2008–0341 for this action. The index to the docket is available electronically at *http://www.regulations.gov* and in hard copy at EPA Region IX, 75 Hawthorne Street, San Francisco, California. While all documents in the docket are listed in the index, some information may be publicly available only at the hard copy location (*e.g.,* copyrighted material), and some may not be publicly available in either location (*e.g.,* CBI). To inspect the hard copy materials, please schedule an appointment during normal business hours with the contact listed in the **FOR FURTHER INFORMATION CONTACT** section.

FOR FURTHER INFORMATION CONTACT: Laura Yannayon, EPA Region IX, (415) 972–3534, *yannayon.laura@epa.gov.*

SUPPLEMENTARY INFORMATION: Throughout this document, "we," "us" and "our" refer to EPA.

Table of Contents

I. Proposed Action
II. Public Comments and EPA Responses
III. EPA Action
IV. Statutory and Executive Order Reviews

I. Proposed Action

On November 19, 2008 (73 FR 69593), EPA proposed to approve the following rules into the California SIP.

TABLE 1—SUBMITTED RULES

Local agency	Rule No.	Rule title	Amended or revised	Submitted
VCAPCD	26	New Source Review—General	03/14/06 Amended	06/16/06
VCAPCD	26.1	New Source Review—Definitions	11/14/06 Revised	05/08/07
VCAPCD	26.2	New Source Review—Requirements	03/14/06 Revised	06/16/06
VCAPCD	26.3	New Source Review—Exemptions	03/14/06 Revised	06/16/06
VCAPCD	26.4	New Source Review—Emissions Banking	03/14/06 Revised	06/16/06
VCAPCD	26.5	New Source Review—Essential Public Service Bank	03/14/06 Revised	06/16/06
VCAPCD	26.6	New Source Review—Calculations	03/14/06 Revised	06/16/06

We proposed to approve these rules because we determined that they complied with the relevant CAA requirements. Our proposed action contains more information on the rule and our evaluation.

II. Public Comments and EPA Responses

EPA's proposed action provided a 30-day public comment period. We did not receive any comments on the proposed action.

III. EPA Action

No comments were submitted that change our assessment that the submitted rules comply with the relevant CAA requirements. Therefore, as authorized in section 110(k)(3) of the CAA, EPA is fully approving VCAPCD Rules 26, 26.1, 26.2, 26.3, 26.4, 26.5, and 26.6 into the California SIP.

IV. Statutory and Executive Order Reviews

Under the Clean Air Act, the Administrator is required to approve a SIP submission that complies with the provisions of the Act and applicable Federal regulations. 42 U.S.C. 7410(k); 40 CFR 52.02(a). Thus, in reviewing SIP submissions, EPA's role is to approve State choices, provided that they meet the criteria of the Clean Air Act. Accordingly, this action merely approves State law as meeting Federal requirements and does not impose additional requirements beyond those imposed by State law. For that reason, this action:

- Is not a "significant regulatory action" subject to review by the Office of Management and Budget under Executive Order 12866 (58 FR 51735, October 4, 1993);
- Does not impose an information collection burden under the provisions of the Paperwork Reduction Act (44 U.S.C. 3501 *et seq.*);
- Is certified as not having a significant economic impact on a substantial number of small entities under the Regulatory Flexibility Act (5 U.S.C. 601 *et seq.*);
- Does not contain any unfunded mandate or significantly or uniquely affect small governments, as described in the Unfunded Mandates Reform Act of 1995 (Pub. L. 104–4);
- Does not have Federalism implications as specified in Executive Order 13132 (64 FR 43255, August 10, 1999);
- Is not an economically significant regulatory action based on health or safety risks subject to Executive Order 13045 (62 FR 19885, April 23, 1997);
- Is not a significant regulatory action subject to Executive Order 13211 (66 FR 28355, May 22, 2001);
- Is not subject to requirements of Section 12(d) of the National Technology Transfer and Advancement Act of 1995 (15 U.S.C. 272 note) because application of those requirements would be inconsistent with the Clean Air Act; and
- Does not provide EPA with the discretionary authority to address, as appropriate, disproportionate human health or environmental effects, using practicable and legally permissible methods, under Executive Order 12898 (59 FR 7629, February 16, 1994).

In addition, this rule does not have tribal implications as specified by Executive Order 13175 (65 FR 67249, November 9, 2000), because the SIP is not approved to apply in Indian country located in the State, and EPA notes that it will not impose substantial direct costs on tribal governments or preempt tribal law.

The Congressional Review Act, 5 U.S.C. 801 *et seq.,* as added by the Small Business Regulatory Enforcement Fairness Act of 1996, generally provides that before a rule may take effect, the agency promulgating the rule must submit a rule report, which includes a copy of the rule, to each House of the Congress and to the Comptroller General of the United States. EPA will submit a report containing this action and other required information to the U.S. Senate, the U.S. House of Representatives, and the Comptroller General of the United States prior to publication of the rule in the **Federal Register.** A major rule cannot take effect until 60 days after it is published in the **Federal Register.** This action is not a "major rule" as defined by 5 U.S.C. 804(2).

Under section 307(b)(1) of the Clean Air Act, petitions for judicial review of this action must be filed in the United States Court of Appeals for the appropriate circuit by March 12, 2010. Filing a petition for reconsideration by the Administrator of this final rule does not affect the finality of this action for the purposes of judicial review nor does it extend the time within which a petition for judicial review may be filed, and shall not postpone the effectiveness of such rule or action. This action may not be challenged later in proceedings to enforce its requirements (*see* section 307(b)(2)).

List of Subjects in 40 CFR Part 52

Environmental protection, Air pollution control, Incorporation by reference, Intergovernmental relations, Particulate matter, Reporting and recordkeeping requirements.

Dated: November 23, 2009.

Laura Yoshii,

Acting Regional Administrator, Region IX.

■ Part 52, chapter I, title 40 of the Code of Federal Regulations is amended as follows:

PART 52—[AMENDED]

■ 1. The authority citation for part 52 continues to read as follows:

Authority: 42 U.S.C. 7401 *et seq.*

Subpart F—California

■ 2. Section 52.220 is amended by adding paragraphs (c)(345)(i)(C)(*2*) and (c)(350)(i)(E)to read as follows:

§ 52.220 Identification of plan.

* * * * *

(c) * * *

(345) * * *

(i) * * *

(C) Ventura County Air Pollution Control District.

(*2*) Rule 26, "New Source Review—General," Rule 26.2, "New Source Review—Requirements," Rule 26.3, "New Source Review—Exemptions," Rule 26.4, "New Source Review—Emissions Banking," Rule 26.5, "New Source Review—Essential Public Service Bank," and Rule 26.6, "New Source Review—Calculations," originally adopted on October 22, 1991 and now revised on March 14, 2006.

* * * * *

(350) * * *

(i) * * *

(E) Ventura County Air Pollution Control District.

(*1*) Rule 26.1, "New Source Review—Definitions," originally adopted on October 22, 1991 and now revised on November 14, 2006.

* * * * *

[FR Doc. 2010–153 Filed 1–8–10; 8:45 am]

BILLING CODE 6560–50–P

FEDERAL COMMUNICATIONS COMMISSION

47 CFR Part 25

[IB Docket No. 07–101; FCC 09–64]

Vehicle–Mounted Earth Stations (VMES)

AGENCY: Federal Communications Commission.

ACTION: Final Rule; announcement of effective date.

SUMMARY: In this document, the Commission announces that the Office of Management and Budget (OMB) has approved, for a period of three years, the information collection requirements associated with Sections 25.132(b)(3), 25.226(a)(6), (b), (c), (d)(1), and (d)(3) of the Commission's rules, and that these rules will take effect as of the date of this notice. On November 4, 2009, the Commission published the summary document of the Report and Order, In the Matter of Amendment of Parts 2 and 25 of the Commission's Rules to Allocate Spectrum and Adopt Service Rules and Procedures to Govern the Use of Vehicle–Mounted Earth Stations in Certain Frequency Bands Allocated to the Fixed–Satellite Service, IB Docket No. 07–101, FCC 09–64, at 74 FR 57092. The Report and Order stated that the Commission will publish a notice in the Federal Register announcing when OMB approval for the rule sections which contain information collection requirements has been received and

when the revised rules will take effect. This notice is consistent with the statement in the Report and Order.

DATES: 47 CFR 25.132(b)(3), 25.226(a)(6), (b), (c), (d)(1), and (d)(3) are effective on January 11, 2010.

FOR FURTHER INFORMATION CONTACT: Kathleen Collins or Howard Griboff, Policy Division, International Bureau, FCC, (202) 418–1460 or via the Internet at: Kathleen.Collins@fcc.gov and Howard.Griboff@fcc.gov.

SUPPLEMENTARY INFORMATION: This document announces that, on January 4, 2010, OMB approved, for a period of three years, the information collection requirements contained in Sections 25.132(b)(3), 25.226(a)(6), (b), (c), (d)(1), and (d)(3) of the Commission's rules. The Commission publishes this notice to announce the effective date of these rules. If you have any comments on the burden estimates listed below, or how the Commission can improve the collections and reduce any burdens caused thereby, please contact Cathy Williams, Federal Communications Commission, Room 1–C823, 445 12th Street, SW., Washington, DC 20554. Please include OMB Control Number 3060–1106 in your correspondence. The Commission also will accept your comments via the Internet if you send them to PRA@fcc.gov. To request materials in accessible formats for people with disabilities (Braille, large print, electronic files, audio format), send an e–mail to fcc504@fcc.gov or call the Consumer & Governmental Affairs Bureau at (202)418–0530 (voice), (202) 418–0432 (TTY).

Synopsis

As required by the Paperwork Reduction Act of 1995 (44 U.S.C. 3507), the Commission is notifying the public that it received OMB approval on January 4, 2010, for the information collection requirements contained in the Commission's rules at 47 CFR Sections 25.132(b)(3), 25.226(a)(6), (b), (c), (d)(1), and (d)(3). Under 5 CFR 1320, an agency may not conduct or sponsor a collection of information unless it displays a current, valid OMB Control Number.

No person shall be subject to any penalty for failing to comply with a collection of information subject to the Paperwork Reduction Act that does not display a valid OMB Control Number. The OMB Control Number is 3060–1106 and the total annual reporting burdens and costs for respondents are as follows:

OMB Control Numbers: 3060–1106.

OMB Approval Date: January 4, 2010.

Expiration Date: December 31, 2012.

Title: Licensing and Service Rules for Vehicle–Mounted Earth Stations (VMES).

Form Number: Not Applicable.

Type of Review: Revision of a currently approved collection.

Respondents: Business or other for–profit entities.

Number of Respondents/Responses: 10 respondents; 10 responses.

Estimated Hours per Response: 0.25 hours – 24 hours per response.

Frequency of Response: On occasion reporting requirements; Recordkeeping requirement; Third party disclosure requirement.

Total Annual Burden: 322 hours.

Total Annual Cost: $104,300.

Obligation to Respond: Required to obtain or retain benefits. The Commission has statutory approval for the information collection requirements under Sections 1, 4(i), 4(j), 7(a), 301, 303(c), 303(f), 303(g), 303(r), 303(y) and 308 of the Communications Act of 1934, as amended, 47 U.S.C. 151, 154(i), 154(j), 157(a), 301, 303(c), 303(f), 303(g), 303(r), 303(y), and 308.

Nature and Extent of Confidentiality: There is no need for confidentiality pertaining to the information collection requirements in this collection.

Privacy Act Assessment: No impact(s).

Needs and Uses: On July 31, 2009, the Federal Communications Commission (Commission) released a Report and Order and Order titled, "In the Matter of Amendment of Parts 2 and 25 of the Commission's Rules to Allocate Spectrum and Adopt Service Rules and Procedures to Govern the Use of Vehicle–Mounted Earth Stations in Certain Frequency Bands Allocated to the Fixed–Satellite Service" (FCC 09–64), IB Docket No. 07–101(hereinafter referred to as "VMES Report and Order"). The VMES Report and Order adopts Part 2 allocation rules and Part 25 technical and licensing rules for a new domestic Ku–band VMES service. VMES service has the potential to deliver advanced mobile applications through satellite technology, including broadband, which will be beneficial for public safety and commercial purposes.

The PRA information collection requirements contained in the VMES Report and Order are as follows:

1. 47 CFR 25.132(b)(3)

VMES applicant seeking to use antenna that does not meet standards of section 25.209(a) and (b), pursuant to procedures set out in section 25.226, shall submit manufacturer's range test plots of antenna gain patterns.

2. 47 CFR 26.226(a)(6)

VMES licensee shall maintain and provide data (record of vehicle location, transmit frequency, channel bandwidth and satellite used for each relevant VMES transmitter) to Commission, NTIA, FSS operator, FS operator, or frequency coordinator within 24 hours upon request.

3. 47 CFR 25.226(b)(1)(i) OR 47 CFR 25.226(b)(1)(ii)

(i) Any VMES applicant filing an application pursuant to paragraph (a)(1) of this section shall file three tables showing the off–axis EIRP level of the proposed earth station antenna in the direction of the plane of the GSO; the co–polarized EIRP in the elevation plane, that is, the plane perpendicular to the plane of the GSO; and cross–polarized EIRP. Each table shall provide the EIRP level at increments of 0.1° for angles between 0° and 10° off–axis, and at increments of 5° for angles between 10° and 180° off–axis.

OR

4. (ii) A VMES applicant shall include a certification, in Schedule B, that the VMES antenna conforms to the gain pattern criteria of § 25.209(a) and (b), that, combined with the maximum input power density calculated from the EIRP density less the antenna gain, which is entered in Schedule B, demonstrates that the off–axis EIRP spectral density envelope set forth in paragraphs (a)(1)(i)(A) through (a)(1)(i)(C) of this section will be met under the assumption that the antenna is pointed at the target satellite.

5. 47 CFR 25.226(b)(1)(iii)

(iii) A VMES applicant proposing to implement a transmitter under paragraph (a)(1)(ii)(A) of this section shall provide a certification from the equipment manufacturer stating that the antenna tracking system will maintain a pointing error of less than or equal to 0.2° between the orbital location of the target satellite and the axis of the main lobe of the VMES antenna and that the antenna tracking system is capable of ceasing emissions within 100 milliseconds if the angle between the orbital location of the target satellite and the axis of the main lobe of the VMES antenna exceeds 0.5°.

6. 47 CFR 25.226(b)(1)(iv)(A), (B)

A VMES applicant proposing to implement a transmitter under paragraph (a)(1)(ii)(B) of this section shall:

(A) declare, in its application, a maximum antenna pointing error and demonstrate that the maximum antenna pointing error can be achieved without exceeding the off–axis EIRP spectral–density limits in paragraph (a)(1)(i) of this section; and (B) demonstrate that the VMES transmitter can detect if the transmitter exceeds the declared maximum antenna pointing error and can cease transmission within 100 milliseconds if the angle between the orbital location of the target satellite and

the axis of the main lobe of the VMES antenna exceeds the declared maximum antenna pointing error, and will not resume transmissions until the angle between the orbital location of the target satellite and the axis of the main lobe of the VMES antenna is less than or equal to the declared maximum antenna pointing error.

7. 47 CFR 25.226(b)(2)(i), (ii), (iii), (iv)

A VMES applicant proposing to implement a transmitter under paragraph (a)(2) of this section and using off–axis EIRP spectral–densities in excess of the levels in paragraph (a)(1)(i) of this section shall provide the following certifications and demonstration as exhibits to its earth station application:

(i) A statement from the target satellite operator certifying that the proposed operation of the VMES has the potential to create harmful interference to satellite networks adjacent to the target satellite(s) that may be unacceptable.

(ii) A statement from the target satellite operator certifying that the power–density levels that the VMES applicant provided to the target satellite operator are consistent with the existing coordination agreements between its satellite(s) and the adjacent satellite systems within 6° of orbital separation from its satellite(s).

(iii) A statement from the target satellite operator certifying that it will include the power–density levels of the VMES applicant in all future coordination agreements.

(iv) A demonstration from the VMES operator that the VMES system is capable of detecting and automatically ceasing emissions within 100 milliseconds when the transmitter exceeds the off–axis EIRP spectral–densities supplied to the target satellite operator.

8. 47 CFR 25.226(b)(3)

A VMES applicant proposing to implement a VMES system under paragraph (a)(3) of this section and using variable power–density control of individual simultaneously transmitting co–frequency VMES earth stations in the same satellite receiving beam shall provide the following certifications and demonstration as exhibits to its earth station application:

(i) The applicant shall make a detailed showing of the measures it intends to employ to maintain the effective aggregate EIRP–density from all simultaneously transmitting co–frequency terminals operating with the same satellite transponder at least 1 dB below the EIRP–density limits defined in paragraphs (a)(1)(i)(A)–(C) of this section. In this context the term "effective" means that the resultant co–polarized and cross–polarized EIRP–density experienced by any GSO or non–GSO satellite shall not exceed that produced by a single VMES transmitter operating at 1 dB below the limits defined in paragraphs (a)(1)(i)(A)–(C) of this section. The International Bureau will place this showing on Public Notice along with the application.

(ii) An applicant proposing to implement a VMES under (a)(3)(ii) of this section that uses off–axis EIRP spectral–densities in excess of the levels in paragraph (a)(3)(i) of this section shall provide the following certifications, demonstration and list of satellites as exhibits to its earth station application:

(A) A detailed showing of the measures the applicant intends to employ to maintain the effective aggregate EIRP–density from all simultaneously transmitting co–frequency terminals operating with the same satellite transponder at the EIRP–density limits supplied to the target satellite operator. The International Bureau will place this showing on Public Notice along with the application.

(B) A statement from the target satellite operator certifying that the proposed operation of the VMES has the potential to create harmful interference to satellite networks adjacent to the target satellite(s) that may be unacceptable.

(C) A statement from the target satellite operator certifying that the aggregate power density levels that the VMES applicant provided to the target satellite operator are consistent with the existing coordination agreements between its satellite(s) and the adjacent satellite systems within 6° of orbital separation from its satellite(s).

(D) A statement from the target satellite operator certifying that it will include the aggregate power–density levels of the VMES applicant in all future coordination agreements.

(E) A demonstration from the VMES operator that the VMES system is capable of detecting and automatically ceasing emissions within 100 milliseconds when an individual transmitter exceeds the off–axis EIRP spectral–densities supplied to the target satellite operator and that the overall system is capable of shutting off an individual transmitter or the entire system if the aggregate off–axis EIRP spectral–densities exceed those supplied to the target satellite operator.

(F) An identification of the specific satellite or satellites with which the VMES system will operate.

(iii) The applicant shall acknowledge that it will maintain sufficient statistical and technical information on the individual terminals and overall system operation to file a detailed report, one year after license issuance, describing the effective aggregate EIRP–density levels resulting from the operation of the VMES system.

9. 47 CFR 25.226 (b)(4)

There shall be an exhibit included with the application describing the geographic area(s) in which the VMESs will operate.

10. 47 CFR 25.226(b)(5)

Any VMES applicant filing for a VMES terminal or system and planning to use a contention protocol shall include in its application a certification that will comply with the requirements of paragraph (a)(4) of this section.

11. 47 CFR 25.226(b)(6)

Application shall include the point of contact with authority and ability to cease all emissions from VMES terminals, as required in paragraph (a)(5) of this section.

12. 47 CFR 25.226 (b)(7)

Any VMES applicant filing for a VMES terminal or system shall include in its application a certification that will comply with the requirements of paragraph (a)(6) of this section.

13. 47 CFR 25.226 (b)(8)

Applicant must submit a radio frequency hazard analysis to determine whether VMES terminals will produce power densities that will exceed the Commission's radio frequency exposure criteria; applicant with terminals that exceed the guidelines in section 1.1310 for radio frequency radiation exposure shall provide a plan for mitigation.

14. 47 CFR 25.226(c)(1)

Licensee shall notify the Commission after completing coordination with NASA and NTIA on current TDRSS sites.

15. 47 CFR 25.226(c)(3)

Licensee shall notify the Commission after completing coordination with NASA and NTIA on future TDRSS sites.

16. 47 CFR 25.226(d)(1)

Operations of VMES licensees in the 14.47–14.5 frequency band are subject to coordination with the National Science Foundation (NSF) and licensee shall notify the Commission's International Bureau and shall submit the coordination agreement once it has completed coordination with NSF for RAS sites listed in paragraph (d)(2) of this section.

17. 47 CFR 25.226(d)(3)

Licensee shall notify the International Bureau once it has completed coordination for any future RAS site and shall submit the coordination agreement once it has completed coordination with NSF.

The information collection requirements accounted for in this

The information collection requirements accounted for in this collection are necessary to prevent regulatory uncertainty with respect to VMES and other satellite services that operate in the Ku–band within the United States. Prior to this rulemaking, the lack of rules for VMES posed an administrative burden on those entities attempting to provide VMES–type services and on Commission staff because such services could be granted only through the use of waivers and Special Temporary Authority (STA) authorizations for a six–month period of time. The approval of fifteen–year licenses for VMES operators significantly reduces the burden imposed upon both licensees and Commission staff who review and approve the waivers and STAs. Furthermore, without such information the Commission would not be able to take the necessary measures to prevent harmful interference to satellite services from VMES. Finally, the Commission would not be able to advance its goals of managing spectrum efficiently and promoting broadband technologies to benefit American consumers throughout the United States.

Federal Communications Commission.

Marlene H. Dortch,

Secretary, Office of the Secretary, Office of Managing Director.

[FR Doc. 2010–245 Filed 1–8–10; 8:45 am]

BILLING CODE 6712–01–S

Proposed Rules

Federal Register
Vol. 75, No. 6
Monday, January 11, 2010

This section of the FEDERAL REGISTER contains notices to the public of the proposed issuance of rules and regulations. The purpose of these notices is to give interested persons an opportunity to participate in the rule making prior to the adoption of the final rules.

FEDERAL HOUSING FINANCE BOARD

12 CFR PART 906

FEDERAL HOUSING FINANCE AGENCY

12 CFR PART 1207

RIN 2590–AA28

Minority and Women Inclusion

AGENCIES: Federal Housing Finance Board; Federal Housing Finance Agency.

ACTION: Notice of proposed rulemaking.

SUMMARY: The Federal Housing Finance Agency (FHFA or agency) is issuing notice and opportunity for the public to comment on this proposed regulation on minority and women inclusion. Section 1116 of the Housing and Economic Recovery Act of 2008 amended section 1319A of the Federal Housing Enterprises Financial Safety and Soundness Act of 1992, requiring FHFA, the Federal National Mortgage Association, the Federal Home Loan Mortgage Corporation, and the Federal Home Loan Banks to promote diversity and the inclusion of women and minorities in all activities. The proposed rule will implement this provision.

DATES: Written comments on the proposed regulation must be received on or before March 12, 2010.

ADDRESSES: Submit comments to FHFA by any of the following methods:

- *E-mail: RegComments@fhfa.gov.* Please include in the subject line of your submission: "Federal Housing Finance Agency—Proposed Rule: RIN 2590–AA28".
- *Mail/Hand Delivery:* Alfred M. Pollard, General Counsel, Federal Housing Finance Agency, Fourth Floor, 1700 G Street, NW., Washington, DC 20552, *Attention:* Public Comments/RIN 2590–AA28. The package should be logged at the Guard Desk, First Floor, on business days between 9 a.m. and 5 p.m.
- *Federal eRulemaking Portal: http://www.regulations.gov.* Follow the instructions for submitting comments. To ensure timely receipt by the agency include the following information in the subject line of your submission: "Federal Housing Finance Agency—Proposed Rule: RIN 2590–AA28". If you submit your comment to the *Federal eRulemaking Portal,* please also send it by e-mail to FHFA at *RegComments@fhfa.gov* to ensure timely receipt by the agency.

FOR FURTHER INFORMATION CONTACT: Eric Howard, Equal Employment Opportunity and Diversity Director, *Eric.Howard@fhfa.gov*, (202) 408–2502, 1625 Eye Street, NW., Washington, DC 20006; or Mark Laponsky, Deputy General Counsel, *Mark.Laponsky@fhfa.gov,* (202) 414–3832 (not toll-free numbers), Federal Housing Finance Agency, Fourth Floor, 1700 G Street, NW., Washington, DC 20552. The telephone number for the Telecommunications Device for the Deaf is (800) 877–8339. For additional information, *see* **SUPPLEMENTARY INFORMATION.**

SUPPLEMENTARY INFORMATION:

I. Comments

FHFA invites comments on all aspects of the proposed regulation and will take all comments into consideration before issuing the final regulation. We will post all public comments we receive without change, including any personal information you provide, such as your name and address, on the FHFA Web site at *http://www.fhfa.gov.* In addition, copies of all comments received will be available for examination by the public on business days between the hours of 10 a.m. and 3 p.m., at the Federal Housing Finance Agency, Fourth Floor, 1700 G Street, NW., Washington, DC 20552. To make an appointment to inspect comments, please call the Office of General Counsel at (202) 414–6924.

II. Background

Effective July 30, 2008, the Housing and Economic Recovery Act of 2008 (HERA), Public Law 110–289, 122 Stat. 2654, amended the Federal Housing Enterprises Financial Safety and Soundness Act of 1992 (12 U.S.C. 4501 *et seq.*) (Safety and Soundness Act) to establish FHFA as an independent agency of the Federal Government.[1] HERA transferred the supervisory and oversight responsibilities of the Office of Federal Housing Enterprise Oversight (OFHEO) over the Federal National Mortgage Association (Fannie Mae) and the Federal Home Loan Mortgage Corporation (Freddie Mac) (collectively, Enterprises), and of the Federal Housing Finance Board (FHFB) over the Federal Home Loan Banks (FHLBanks or Banks) (collectively, regulated entities) and the FHLBank System's Office of Finance to FHFA. In addition, this law combined the staffs of OFHEO, FHFB, and the Government-Sponsored Enterprise mission office of the Department of Housing and Urban Development (HUD).

The Safety and Soundness Act provides that FHFA is headed by a Director with general supervisory and regulatory authority over the regulated entities. FHFA is charged, among other things, with overseeing the prudential operations of the regulated entities and to ensure that they: Operate in a safe and sound manner including maintenance of adequate capital and internal controls; foster liquid, efficient, competitive, and resilient national housing finance markets; comply with the Safety and Soundness Act and rules, regulations, guidelines and orders issued under the Safety and Soundness Act, and the respective authorizing statutes of the regulated entities; and carry out their missions through activities authorized and consistent with the Safety and Soundness Act and their authorizing statutes; and, that the activities and operations of the regulated entities are consistent with the public interest. The Enterprises and the FHLBanks continue to operate under regulations promulgated by OFHEO, FHFB, and as relevant, HUD, until FHFA issues its own regulations.[2]

A. The FHLBank System

The FHLBank System (System) was created by the Federal Home Loan Bank Act of 1932 (FHLBank Act) as a government-sponsored enterprise (GSE) to support mortgage lending and related community investment. It is composed of 12 FHLBanks, more than 8,000

[1] *See* Division A, titled the "Federal Housing Finance Regulatory Reform Act of 2008," Title I, section 1101 of HERA.

[2] *Sections* 1302, 1303, 1312, and 1313 of HERA, 122 Stat. 2795, 2796, and 2798.

member financial institutions, and the System's fiscal agent, the Office of Finance. The FHLBanks fulfill their statutory mission primarily through providing to its members long- and short-term loans (called advances). The FHLBank Act provides the FHLBanks explicit authority to make secured advances.[3] Advances provide members with a source of funding for mortgages and asset-liability management; liquidity for a member's short-term needs; and additional funds for housing finance and community development. Advances are collateralized primarily by residential mortgage loans, and government and agency securities. Community financial institutions (*i.e.,* members with assets less than $1 billion) may pledge small business, small farm, and small agri-business loans as collateral for advances. Additionally, some of the FHLBanks have Acquired Member Asset (AMA) programs whereby they acquire fixed-rate, single-family mortgage loans from participating member institutions. Given their status as GSEs, the FHLBanks are able to borrow funds in the capital markets on terms more favorable than could be obtained by most other entities. Consolidated obligations, consisting of bonds and discount notes, are the principal source for the FHLBanks to fund advances, AMA programs, and investments. The Office of Finance, as the System's fiscal agent, issues all consolidated obligations on behalf of the 12 FHLBanks. Although each FHLBank is primarily liable for the portion of consolidated obligations corresponding to the proceeds received by that FHLBank, each FHLBank is also jointly and severally liable with the other 11 FHLBanks for the payment of principal of, and interest on, all consolidated obligations.[4]

B. The Enterprises

Fannie Mae and Freddie Mac are GSEs chartered by Congress for the purpose of establishing secondary market facilities for residential mortgages.[5] Specifically, Congress established the Enterprises to provide stability in the secondary market for residential mortgages, respond appropriately to the private capital market, provide ongoing assistance to the secondary market for residential mortgages, and promote access to mortgage credit throughout the nation.[6]

The Enterprises fulfill their statutory mission by purchasing residential mortgages from lenders and either holding these mortgages in their portfolios or packaging the loans into mortgage-backed securities (MBS) that are sold to the public. By packaging mortgages into MBS and guaranteeing the timely payment of principal and interest on the underlying mortgages, Fannie Mae and Freddie Mac attract to the secondary mortgage market investors who might not otherwise invest in mortgages, thereby expanding the pool of funds available for housing. The Enterprises finance purchases of their mortgage-related securities and mortgage loans, and manage their market risks, primarily by issuing debt instruments and entering into derivative contracts in the capital markets. Fannie Mae and Freddie Mac are shareholder-owned companies and their common stock is listed on the New York Stock Exchange. Each Enterprise is a separate corporate entity with its own management and board of directors elected annually by the common stockholders.

III. Summary of the Proposed Regulation

Section 1116 of HERA amended section 1319A of the Safety and Soundness Act (12 U.S.C. 4520) to require FHFA to engage in certain activities to promote a diverse workforce. It also requires each Regulated Entity to establish an Office of Minority and Women Inclusion, or designate an office, responsible for carrying out the requirements of the section and such requirements and standards established by the Director. Section 1319A of the Safety and Soundness Act requires the regulated entities to promote diversity in all activities and at every level of the organization, including management, employment and contracting. Furthermore, 12 U.S.C. 1833e, as amended, and Executive Order 11478 require FHFA and the regulated entities to promote equal opportunity in employment and contracting. FHFA will prescribe regulations establishing a minority outreach program to promote diversity in FHFA contracting. The proposed rule supersedes 12 CFR part 906, subpart C, the FHFB regulation on minority and women outreach; therefore, 12 CFR part 906, subpart C will be withdrawn, removed, and deleted upon the effective date of a final rule.

The proposed rule would implement the requirements of 12 U.S.C. 1833e, 4520, and Executive Order 11478 in a single regulation. Section 1313(f) of the Safety and Soundness Act, as amended by section 1201 of HERA, requires the Director, when promulgating regulations relating to the Banks, to consider the differences between the Banks and the Enterprises with respect to the Banks' cooperative ownership structure; mission of providing liquidity to members; affordable housing and community development mission; capital structure; and joint and several liability. The Director may also consider any other differences that are deemed appropriate. In preparing the proposed rule, the Director considered the differences between the Banks and the Enterprises as they relate to the above factors. The Director requests comments from the public about whether differences related to these factors should result in a revision of the proposed rule as it relates to the Banks.

Additionally, although the Office of Finance is not directly covered by section 1116 of HERA, it is subject to the Director's "general regulatory authority" under section 1311(b)(2) of the Safety and Soundness Act (12 U.S.C. 4511(b)(2)), as amended by HERA. The Director has determined that the national policy and purposes of section 1116 of HERA are sufficiently important to treat the Office of Finance in the same manner as the regulated entities for the purposes of this proposed rule.

Subpart A of the proposed rule contains items of general applicability to FHFA, the regulated entities, and the Office of Finance. It defines terms used in this part, addresses FHFA's general policy and purpose of issuance, and explains how this part applies to FHFA's, the regulated entities', and the Office of Finance's equal opportunity programs. The requirements of section 1116 of HERA are limited to minorities and women. The proposed rule expands those requirements to cover disabled populations. HERA authorizes FHFA's Director to establish "standards and requirements" relating to diversity in the "management, employment and business activities" of the regulated entities.[7] The Director considers ensuring that disabled populations are included in the management, employment, and business activities of the regulated entities and the Office of Finance an important aspect of diversity to which the requirements of this proposed rule should apply.

Subpart B of the proposed rule confirms FHFA's commitment to equal

[3] 12 U.S.C. 1430(10).

[4] *See* 12 CFR 966.9.

[5] *See* Fannie Mae Charter Act, 12 U.S.C. 1716 *et seq.;* Freddie Mac Corporation Act, 12 U.S.C. 1451 *et seq.*

[6] *Id.*

[7] *See* 12 U.S.C. 4520(a).

opportunity and describes activities to promote workforce diversity and equal employment opportunity within FHFA. Proposed subpart B also identifies and describes FHFA's contractor outreach activities and programs to ensure equal opportunity in contracting by FHFA, as required by 12 U.S.C. 1833e.

Subpart C of the proposed rule contains requirements for the regulated entities and the Office of Finance. It instructs each regulated entity and the Office of Finance to establish an Office of Minority and Women Inclusion, or designate an office, responsible for carrying out the requirements of the section and such requirements and standards established by the Director. The subpart requires each regulated entity and the Office of Finance to establish an equal opportunity program applying to all areas of the business, including management, employment and contracting, at every level of the organization. It requires each regulated entity and the Office of Finance to establish an outreach program to ensure the inclusion of minorities, women, and individuals with disabilities, and businesses owned by them in contracts entered into by the Regulated Entities or the Office of Finance. Further, proposed subpart C sets forth reporting requirements, including minimum contents of reports to FHFA by the regulated entities and the Office of Finance. The proposed rule observes that FHFA's activity under this subpart C and related guidance, standards, directives or orders is regulatory and supervisory in nature and may lead to regulatory or supervisory actions, including enforcement actions.

FHFA has considered that any data or information reporting requirements present operational and administrative burdens. FHFA does not consider the burden of reporting under the proposed rule to be unreasonable. Congress recognized the importance of promoting diversity in the management, employment and business activities of the Regulated Entities. Consequently, FHFA believes that ensuring compliance with the proposed diversity requirements is a one of its supervisory and regulatory duties. For several decades companies in most industries, including much of the financial services industry, have been subject to reporting requirements and enforcement with respect to diversity. Agencies requiring such reports and enforcing standards include the U.S. Equal Employment Opportunity Commission and the Office of Federal Contract Compliance Programs in the U.S. Department of Labor. The proposed subpart C does not seek to duplicate reporting burdens imposed by either agency. Instead, FHFA has selected specific types of information that are particularly useful in analyzing the demographic composition of workforces at every level. It also identifies for reporting similar types of data that allow FHFA to analyze diversity among the contractors used by regulated entities and the Office of Finance.

IV. Section-by-Section Analysis

Section 1207.1 Definitions

Proposed § 1207.1 defines terms used in this part.

Section 1207.2 Policy, Purpose, and Scope

Proposed § 1207.2 expresses FHFA's policy that it, the Regulated Entities, and the Office of Finance shall promote non-discrimination, diversity and the inclusion of women, minorities, and the disabled in all their activities. It explains the purpose to establish minimum standards for FHFA, the regulated entities, and the Office of Finance in carrying out the policy of non-discrimination, diversity and inclusion. Proposed § 1207.2 also makes clear that the regulation applies to FHFA as well as to the regulated entities and the Office of Finance.

Section 1207.3 Limitations

Proposed § 1207.3 provides that except as necessary for enforcement by FHFA, the rule does not create any enforceable right or benefit.

Sections 1207.4 Through 1207.9 [Reserved]

Section 1207.10 FHFA Workforce Diversity; Equal Employment Opportunity Program

Proposed § 1207.10 describes FHFA's program for promoting diversity and equal employment opportunity in its workforce and how FHFA will comply with the specific requirements of section 1116 of HERA and Executive Order 11478.

Section 1207.11 Equal Opportunity and Outreach in FHFA Contracting

Proposed § 1207.11 implements 12 U.S.C. 1833e by establishing FHFA's program for ensuring equal opportunity, diversity and inclusion in the use of contractors, and describing the agency's contractor outreach program, record-keeping and complaint resolution process.

Sections 1207.12–1207.19 [Reserved]

Section 1207.20 Office of Minority and Women Inclusion

Proposed § 1207.20 implements the requirement that each regulated entity and the Office of Finance create an Office of Minority and Women Inclusion or designate an office to fulfill the requirements of this part, section 1116 of HERA, and 12 U.S.C. 1833e(b), and provide the office with adequate resources to perform its responsibilities.

Section 1207.21 Equal Opportunity in Employment and Contracting

Proposed § 1207.21 establishes minimum requirements for each regulated entity's and the Office of Finance's equal opportunity, diversity and inclusion programs for equal opportunity in regulated entity and Office of Finance employment, management, contracting, and all other business activities.

Section 1207.22 Regulated Entity and Office of Finance Reports

Proposed § 1207.22 establishes a minimum requirement of an annual report submitted by each regulated entity and the Office of Finance and provides notice that the Director may require additional reports.

Section 1207.23 Annual Reports—Format and Contents

Proposed § 1207.23 establishes the format and minimum content required in each regulated entity's and the Office Finance's annual report on Minority and Women Inclusion.

Section 1207.24 Enforcement

Proposed § 1207.24 explains that FHFA considers non-compliance with this regulation or with standards issued under this regulation by the regulated entities or the Office of Finance to be the basis for enforcement actions under 12 U.S.C. 4513b and 4515, and that the Director may initiate examinations of a regulated entity's or the Office of Finance's compliance under 12 U.S.C. 4517.

V. Regulatory Impacts

Paperwork Reduction Act

The proposed regulation does not contain any information collection requirement that requires the approval of the Office of Management and Budget under the Paperwork Reduction Act (44 U.S.C. 3501 *et seq.*).

Regulatory Flexibility Act

The Regulatory Flexibility Act (5 U.S.C. 601 *et seq.*) requires that a regulation that has a significant

economic impact on a substantial number of small entities, small businesses, or small organizations shall include an initial regulatory flexibility analysis describing the regulation's impact on small entities. Such an analysis need not be undertaken if the agency has certified that the regulation will not have a significant economic impact on a substantial number of small entities. 5 U.S.C. 605(b). FHFA has considered the impact of the proposed regulation under the Regulatory Flexibility Act. FHFA certifies that the proposed regulation, if adopted, is not likely to have a significant economic impact on a substantial number of small business entities because the regulation is applicable only to FHFA, the regulated entities, and the Office of Finance, which are not small entities for purposes of the Regulatory Flexibility Act.

List of Subjects

12 CFR Part 906

Government contracts, Minority businesses.

12 CFR Part 1207

Disability, Discrimination, Equal employment opportunity, Government contracts, Minority businesses, Office of Finance, Outreach, Regulated entities.

Authority and Issuance

Accordingly, for the reasons stated in the preamble, under the authority of 12 U.S.C. 4526, the Federal Housing Finance Agency proposes to amend chapters IX and XII of Title 12, Code of Federal Regulations, as follows:

CHAPTER IX—FEDERAL HOUSING FINANCE BOARD

PART 906—OPERATIONS

Subpart C—[Removed and Reserved]

1. Remove and reserve subpart C, consisting of §§ 906.10 through 906.13.

CHAPTER XII—FEDERAL HOUSING FINANCE AGENCY

Subchapter A—Organization and Operations

2. Add part 1207 to subchapter A to read as follows:

PART 1207—MINORITY AND WOMEN INCLUSION

Subpart A—General

Sec.

1207.1 Definitions.
1207.2 Policy, purpose, and scope.
1207.3 Limitations.
1207.4–1207.9 [Reserved].

Subpart B—Minority and Women Inclusion and Diversity at the Federal Housing Finance Agency

1207.10 FHFA workforce diversity; equal employment opportunity program.
1207.11 Equal opportunity and outreach in FHFA contracting.
1207.12–1207.19 [Reserved].

Subpart C—Minority and Women Inclusion and Diversity at Regulated Entities and the Office of Finance

1207.20 Office of Minority and Women Inclusion.
1207.21 Equal opportunity in employment and contracting.
1207.22 Regulated entity and Office of Finance Reports.
1207.23 Annual reports—format and contents.
1207.24 Enforcement.

Authority: 12 U.S.C. 4520 and 4526; 12 U.S.C. 1833e; E.O. 11478.

PART 1207—MINORITY AND WOMEN INCLUSION

Subpart A—General

§ 1207.1 Definitions.

The following definitions apply to the terms used in this part:

Business and activities means operational, commercial, and economic endeavors of any kind, whether for profit or not for profit and whether regularly or irregularly engaged in by a regulated entity or the Office of Finance, and includes, but is not limited to, management of the regulated entity or the Office of Finance, employment, procurement, insurance, and all types of contracts, including contracts for the issuance or guarantee of any debt, equity, or mortgage-related securities, the management of mortgage and securities portfolios, the making of equity investments, the purchase, sale and servicing of single- and multi-family mortgage loans, and the implementation of affordable housing or community investment programs and initiatives.

Director means the Director of FHFA or his or her designee.

Disability has the same meaning as defined in 29 CFR 1630.2(g) and 1630.3 and Appendix to Part 1630—Interpretive Guidance on Title I of the Americans With Disabilities Act.

Disabled means a person with a disability.

Disabled-owned business means a business, and includes financial institutions, mortgage banking firms, investment banking firms, investment consultants or advisors, financial services entities, asset management entities, underwriters, accountants, brokers, brokers-dealers, and providers of legal services—

(1) Qualified as a Service-Disabled Veteran-Owned Small Business Concern as defined in 13 CFR 125.8 through 125.13; or

(2) More than fifty percent (50%) of the ownership or control of which is held by one or more persons with a disability; and

(3) More than fifty percent (50%) of the net profit or loss of which accrues to one or more persons with a disability.

FHFA means the Federal Housing Finance Agency.

Minority means Black or African American, American Indian or Alaska Native, Hispanic or Latino American, Asian American, and Native Hawaiian or Other Pacific Islander.

Minority-owned business means a business, and includes financial institutions, mortgage banking firms, investment banking firms, investment consultants or advisors, financial services entities, asset management entities, underwriters, accountants, brokers, brokers-dealers and providers of legal services:

(1) More than fifty percent (50%) of the ownership or control of which is held by one or more minority individuals; and

(2) More than fifty percent (50%) of the net profit or loss of which accrues to one or more minority individuals.

Office of Finance means the Office of Finance of the Federal Home Loan Bank System.

Reasonable accommodation has the same meaning as defined in 29 CFR 1630.2(o) and Appendix to Part 1630—Interpretive Guidance on Title I of the Americans With Disabilities Act.

Regulated entity means the Federal Home Loan Mortgage Corporation, the Federal National Mortgage Association, any Federal Home Loan Bank and/or any affiliate thereof that is subject to the regulatory authority of FHFA. The term "*regulated entities*" means (collectively) the Federal Home Loan Mortgage Corporation, the Federal National Mortgage Association, and/or any affiliate Federal Home Loan Bank and/or any affiliate thereof that is subject to the regulatory authority of FHFA.

Women-owned business means a business, and includes financial institutions, mortgage banking firms, investment banking firms, investment consultants or advisors, financial services entities, asset management entities, underwriters, accountants, brokers, brokers-dealers and providers of legal services:

(1) More than fifty percent (50%) of the ownership or control of which is held by one or more women;

(2) More than fifty percent (50%) of the net profit or loss of which accrues to one or more women; and

(3) A significant percentage of senior management positions of which are held by women.

§ 1207.2 Policy, purpose, and scope.

(a) *General policy.* FHFA's policy is to promote non-discrimination, diversity and inclusion of women and minorities in its own activities and in the business and activities of the regulated entities and the Office of Finance.

(b) *Purpose.* This part establishes minimum standards and requirements for FHFA, the regulated entities and the Office of Finance to promote diversity and ensure, to the maximum extent possible, the inclusion and utilization of minorities, women, individuals with disabilities, and minority-, women-, and disabled-owned businesses at all levels, in management and employment, in all business and activities, and in all contracts for services of any kind, including services that require the services of investment banking, asset management entities, broker-dealers, financial services entities, underwriters, accountants, investment consultants, and providers of legal services.

(c) *Scope.* This part applies to FHFA's contract and outreach programs, to each regulated entity's and the Office of Finance's implementation of and adherence to diversity, inclusion and non-discrimination policies, practices and principles.

§ 1207.3 Limitations.

Except as expressly provided herein for enforcement by FHFA, the regulations in this part do not, are not intended to, and should not be construed to create any right or benefit, substantive or procedural, enforceable at law, in equity, or through administrative proceeding, by any party against the United States, its departments, agencies, or entities, its officers, employees, or agents, a regulated entity or the Office of Finance, their officers, employees or agents, or any other person.

§§ 1207.4 through 1207.9 [Reserved].

Subpart B—Minority and Women Inclusion and Diversity at the Federal Housing Finance Agency

§ 1207.10 FHFA Workforce Diversity; Equal Employment Opportunity program.

(a) *General.* FHFA will take affirmative steps to seek diversity in its workforce at all levels of the agency, consistent with the demographic diversity of the United States, and maintain an Equal Employment Opportunity (EEO) program consistent with the Equal Employment Opportunity Commission requirements for Federal agencies and Executive Order 11478.

(b) *Workforce diversity.* FHFA is committed to a diverse workforce at all levels in the agency and in every area of its activity. FHFA will not discriminate in employment or in contracting against any person, contractor or potential contractor because of race, color, religion, national origin, sex, age, genetic information, disability, sexual orientation, or status as a parent.

(c) *Affirmative steps for workforce diversity.* FHFA will engage in at least the following activities to promote diversity in the agency's workforce:

(1) Heavily recruiting at historically Black colleges and universities, Hispanic-serving institutions, women's colleges, and colleges that typically serve the individuals with disabilities and majority minority populations;

(2) Sponsoring and recruiting at job fairs in urban communities and placing employment advertisements in newspapers and magazines oriented toward women and people of color;

(3) Partnering with organizations that are focused on developing opportunities for minorities and women to place talented young minorities and women in industry internships, summer employment and full-time positions; and

(4) Where feasible, partnering with inner-city high schools, girl's schools, and high schools with majority minority populations to establish or enhance financial literacy programs and provide mentoring.

(d) *EEO program elements.* In addition to workforce diversity activities, FHFA's EEO program will consist of at least the following activities and elements:

(1) An EEO policy and complaint procedure for employees and applicants for employment;

(2) A reasonable accommodation request procedure for employees and applicants for employment;

(3) A program for maintaining contact and liaison with internal and external stakeholders, including other government agencies, on matters of diversity and equal opportunity;

(4) Periodic workplace surveys to refresh workforce demographic data;

(5) An alternative dispute resolution process for resolving complaints of employment discrimination;

(6) An annual notice to employees and the public of FHFA's commitment to EEO and non-discrimination that is distributed to all employees and published in a manner accessible to the public;

(7) Ensuring the delivery of training for employees and supervisors with respect to non-discrimination obligations and rights;

(8) Reporting as required on FHFA No FEAR Act training, non-discrimination and diversity training, and No FEAR Act compliance;

(9) Collecting and reporting data on EEO complaints at FHFA;

(10) Collecting, analyzing and reporting FHFA workforce demographic data with respect to all aspects of employment;

(11) Recommending to the Director actions and plans for EEO and diversity enhancement in FHFA's operations, programs and policies, programs, and implementing approved actions and plans;

(12) Evaluating the effectiveness and impact of FHFA policies, programs and practices on diversity in FHFA; and

(13) Maintaining equal opportunity and diversity in contracting policies, training contracting staff in these requirements, analyzing the effectiveness and reporting on agency efforts and outreach to promote diversity in contracting.

§ 1207.11 Equal opportunity and outreach in FHFA contracting.

(a) *Equal opportunity in contracting.* FHFA is committed to ensuring that minorities, women, individuals with disabilities, and minority-, women-, and disabled-owned businesses have the maximum practicable opportunity to participate fully in all contracts awarded by FHFA. FHFA does not discriminate on the basis of race, color, religion, national origin, sex, age, genetic information, disability, sexual orientation or status as a parent in the solicitation, award, or administration of contracts.

(b) *Outreach.* FHFA's outreach is intended to ensure that minorities, women and individuals with disabilities, and minority-, women-, and disabled-owned businesses are made aware of and given the opportunity to compete for contracts with FHFA. FHFA will conduct outreach activities that may include, but are not limited to:

(1) Identifying contractors that are minorities, women, individuals with disabilities, and minority-, women-, and disabled-owned businesses by obtaining lists and directories maintained by government agencies, trade groups, and other organizations;

(2) Offering technical assistance for minorities, women, individuals with disabilities, and minority-, women-, and disabled-owned businesses to

participate in FHFA's contracting process;

(3) Advertising contract opportunities through media targeted to reach potential contractors that are minorities, women, individuals with disabilities, and minority-, women-, and disabled-owned businesses;

(4) Participating in events such as conventions, trade shows, seminars, professional meetings and other gatherings intended to promote business opportunities for minorities, women, individuals with disabilities, and minority-, women-, and disabled-owned businesses; and

(5) Ensuring that FHFA contracting staff understands and promotes the outreach program.

(c) *Complaints of discrimination in FHFA contracting.* Any contractor or potential contractor that believes FHFA intentionally discriminated on the basis of race, color, religion, national origin, sex, age, genetic information, or disability, sexual orientation or status as a parent in the solicitation, award or administration of a contract may make such a complaint to the responsible FHFA contracting officer, consistent with FHFA's contract dispute resolution procedure.

(d) *Record-keeping.* FHFA's contracting officer will maintain data of complaints of discrimination, resolution of those complaints, FHFA's outreach efforts, and the sources from which successful contractor bidders who are minorities, women, individuals with disabilities, or minority-, women-, and disabled-owned businesses learned of the contracting opportunity.

§§ 1207.12 through 1207.19 [Reserved].

Subpart C—Minority and Women Inclusion and Diversity at Regulated Entities and the Office of Finance

§ 1207.20 Office of Minority and Women Inclusion.

(a) *Establishment.* Each regulated entity and the Office of Finance shall establish and maintain an Office of Minority and Women Inclusion, or designate and maintain an office to perform the responsibilities of this part, under the direction of an officer of the regulated entity or the Office of Finance who reports directly to either the Chief Executive Officer or the Chief Operating Officer, or the equivalent. Each regulated entity and the Office of Finance shall notify the Director within thirty (30) days after any change in the designation of the office performing the responsibilities of this part.

(b) *Adequate resources.* Each regulated entity and the Office of Finance will ensure that its Office of Minority and Women Inclusion, or the office designated to perform the responsibilities of this part, is provided human, technological, and financial resources sufficient to fulfill the requirements of this part.

(c) *Responsibilities.* Each Office of Minority and Women Inclusion, or the office designated to perform the responsibilities of this part, is responsible for fulfilling the requirements of this part, 12 U.S.C. 1833e(b) and 4520, and such standards and guidance as the Director may issue hereunder.

§ 1207.21 Equal opportunity in employment and contracting.

(a) *Equal opportunity notice.* Each regulated entity and the Office of Finance shall publish a statement, endorsed by its Chief Executive Officer and approved by its Board of Directors, confirming its commitment to the principles of equal opportunity in employment and in contracting, regardless of race, color, national origin, sex, religion, age, disability status, or genetic information. Publication shall include, at a minimum, conspicuous posting in each regulated entity's and Office of Finance's physical facility (including through alternative media—*e.g.,* Braille, audio—as necessary) and accessible posting on the regulated entity's and the Office of Finance's web site. The notice shall be updated and re-published, re-endorsed by the Chief Executive Officer and re-approved by the Board of Directors annually.

(b) *Policies and procedures.* Each regulated entity and the Office of Finance shall develop, implement, and maintain standards and procedures to ensure, to the maximum extent possible, the inclusion and utilization of minorities, women, individuals with disabilities, and minority-, women-, and disabled-owned businesses in all business and activities and at all levels of the regulated entity and the Office of Finance, including in management, employment, procurement, insurance, and all types of contracts. The policies and procedures of each regulated entity and the Office of Finance at a minimum shall:

(1) Confirm its adherence to the principles of equal opportunity and non-discrimination in employment and in contracting;

(2) Describe its policy against discrimination in employment and contracting;

(3) Establish internal procedures to receive and attempt to resolve complaints of discrimination in employment and in contracting, which shall include an opportunity to use alternative dispute resolution techniques, when appropriate;

(4) Establish an effective procedure for accepting, reviewing and granting or denying requests for reasonable accommodations of disabilities from employees or applicants for employment. Publication will include at a minimum making the procedure conspicuously accessible to employees and applicants through print, electronic, or alternative (*e.g.,* Braille, audio) media and through the regulated entity's or the Office of Finance's web site;

(5) Encourage the consideration of diversity in nominating or soliciting nominees for positions on boards of directors;

(6) Require that each contract it enters contains a material clause committing the contractor to practice the principles of equal employment opportunity and non-discrimination in all its business activities and requiring each such contractor to include the clause in each subcontract it enters for services or goods provided to the regulated entity or the Office of Finance;

(7) Be published and accessible to employees, applicants for employment, contractors, potential contractors, and members of the public through print, electronic, or alternative (*e.g.,* Braille, audio) media and through the regulated entity's or the Office of Finance's web site; and

(8) Be reviewed at the direction of the officer immediately responsible for directing the Office of Minority and Women Inclusion, or other office designated to perform the responsibilities of this part, at least annually to assess their effectiveness and to incorporate appropriate changes.

(c) *Outreach for contracting.* Each regulated entity and the Office of Finance shall establish a program for outreach designed to ensure to the maximum extent possible the inclusion in contracting opportunities of minorities, women, individuals with disabilities, and minority-, women-, and disabled-owned businesses. The program at a minimum shall:

(1) Apply to all contracts entered by the regulated entity or the Office of Finance, including contracts with financial institutions, investment banking firms, investment consultants or advisors, financial services entities, mortgage banking firms, asset management entities, underwriters, accountants, brokers, brokers-dealers, and providers of legal services;

(2) Establish standards and procedures requiring publication of contracting opportunities designed to encourage contractors that are minorities, women, individuals with

disabilities, and minority-, women-, and disabled-owned businesses to submit offers or bid for the award of such contracts; and

(3) Ensure the consideration of the diversity of a contractor when the regulated entity or the Office of Finance reviews and evaluates offers from contractors.

§ 1207.22 Regulated entity and Office of Finance reports.

(a) *General.* Each regulated entity and the Office of Finance, through its Office of Minority and Women Inclusion, or other office designated to perform the responsibilities of this part, shall report in writing, in such format as the Director may require, to the Director describing its efforts to promote diversity and ensure the inclusion and utilization of minorities, women, individuals with disabilities, and minority-, women-, and disabled-owned businesses at all levels, in management and employment, in all business and activities, and in all contracts for services and the results of such efforts.

(1) Within (90) days after the effective date of this regulation each regulated entity and the Office of Finance shall submit to the Director or his or her designee a preliminary status report describing actions taken, plans for and progress toward implementing the provisions of 12 U.S.C. 4520 and this part; and including to the extent available the data and information required by this part to be included in an annual report.

(2) FHFA intends to use the preliminary status report solely as material relating to examining the submitting regulated entity or the Office of Finance and reporting to the institution on its operations and the condition of its program.

(b) *FHFA use of reports.* The data and information reported to FHFA under this part are intended to be used for any permissible supervisory and regulatory purpose, including examinations, enforcement actions, identification of matters requiring attention, and production of FHFA examination, operating and condition reports related to one or more of the regulated entities and the Office of Finance. FHFA may use the information and data submitted to issue aggregate reports and data summaries that each regulated entity and the Office of Finance may use to assess its own progress and accomplishments, or to the public as it deems necessary. FHFA is not requiring, and does not desire, that reports under this part contain personally identifiable information.

(c) *Frequency of reports.* Each regulated entity and the Office of Finance shall submit an annual report on or before February 1 of each year, beginning in 2011, reporting on the period of January 1 through December 31 of the preceding year, and such other reports as the Director may require. If the date for submission falls on a Saturday, Sunday, or Federal holiday, the report is due no later than the next day that is not a Saturday, Sunday, or Federal holiday.

(d) *Annual summary.* Each regulated entity and the Office of Finance shall include in its annual report to the Director (pursuant to 12 U.S.C. 1723a(k), 1456(c), or 1440, with respect to the regulated entities) a summary of its activities under this part during the previous year, including at a minimum, detailed information describing the actions taken by the regulated entity or the Office of Finance pursuant to 12 U.S.C. 4520 and a statement of the total amounts paid by the regulated entity or the Office of Finance to third-party contractors during the previous year and the percentage of such amounts paid to contractors that are minorities or minority-owned businesses, women or women-owned businesses, and individuals with disabilities or disabled-owned businesses, respectively.

§ 1207.23 Annual reports—format and contents.

(a) *Format.* Each annual report shall consist of a detailed summary of the regulated entity's or the Office of Finance's activities during the reporting year to carry out the requirements of this part, which report may also be made a part of the regulated entity's or the Office of Finance's annual report to the Director. The report shall contain a table of contents and conclude with a certification by the regulated entity's or the Office of Finance's officer responsible for the annual report that the data and information presented in the report, are accurate, and are approved for submission.

(b) *Contents.* The annual report shall contain the information provided in the regulated entity's or the Office of Finance's annual summary pursuant to § 1207.22(d) and, in addition to any other information or data the Director may require, shall include:

(1) The EEO–1 Employer Information Report (Form EEO–1 used by the Equal Employment Opportunity Commission and the Office of Federal Contract Compliance Programs to collect certain demographic information) or similar reports filed by the regulated entity or the Office of Finance during the reporting year. If the regulated entity or the Office of Finance does not file Form EEO–1 or similar reports, the regulated entity or the Office of Finance shall submit to FHFA a completed Form EEO–1;

(2) All other reports or plans the regulated entity or the Office of Finance submitted to the Equal Employment Opportunity Commission, the Department of Labor, Office of Federal Contract Compliance Programs or Congress ("reports or plans" is not intended to not include separate complaints or charges of discrimination or responses thereto charges of discrimination) during the reporting year;

(3) Data showing by minority, gender, and disability classification the number of individuals applying for employment with the regulated entity or the Office of Finance in each occupational or job category identified on the Form EEO–1 during the reporting year;

(4) Data showing by minority, gender, and disability classification the number of individuals hired for employment with the regulated entity or the Office of Finance in each occupational or job category identified on the Form EEO–1 during the reporting year;

(5) Data showing by minority, gender and disability classification, and categorized as voluntary or involuntary, the number of separations from employment with the regulated entity or the Office of Finance in each occupational or job category identified on the Form EEO–1 during the reporting year;

(6) Data showing the number of requests for reasonable accommodation received from employees and applicants for employment, the number of requests granted, and the disabilities accommodated and the types of accommodation granted during the reporting year;

(7) Data showing for the reporting year by minority, gender, and disability classification the number of individuals applying for promotion at the regulated entity or the Office of Finance—

(i) Within each occupational or job category identified on the Form EEO–1; and

(ii) From one such occupational or job category to another.

(8) Data showing by minority, gender, and disability classification the number of individuals—

(i) Promoted at the regulated entity or the Office of Finance within each occupational or job category identified on the Form EEO–1, after applying for such a promotion;

(ii) Promoted at the regulated entity or the Office of Finance within each

occupational or job category identified on the Form EEO–1, without applying for such a promotion;

(iii) Promoted at the regulated entity or the Office of Finance from one occupational or job category identified on the Form EEO–1 to another such category, after applying for such a promotion.

(9) A comparison of the data reported under paragraphs (b)(1) through (b)(8) of this section to such data as reported in the previous year together with a narrative analysis;

(10) Descriptions of all regulated entity or Office of Finance outreach activity during the reporting year to low-income, inner city, minority, women, and disabled populations, including activities to provide financial literacy education, to recruit employees, to solicit or advertise for contractors to provide service to the regulated entity or Office of Finance, or to inform such contractors of the regulated entity's or Office of Finance's contracting process or provide technical assistance for participation in the contracting process, including the identification of any partners, organizations, or government offices with which the regulated entity or the Office of Finance participated in such outreach activity;

(11) Cumulative data separately showing the number of contracts entered with minority or minority-owned businesses, women or women-owned businesses, and disabled or disabled-owned businesses during the reporting year;

(12) Cumulative data separately showing for the reporting year the total amount the regulated entity or the Office of Finance paid to contractors that are—

(i) Minority or minority-owned businesses;

(ii) Women or women-owned businesses; and

(iii) Disabled or disabled-owned businesses.

(13) The annual total of amounts paid to contractors and the percentage of which was paid separately to minority or minority-owned businesses, women or women-owned businesses, and disabled or disabled-owned businesses during the reporting year;

(14) Certification of compliance with §§ 1207.20 and 1207.21, together with sufficient documentation to verify compliance;

(15) Data for the reporting year showing, separately, the number of equal opportunity complaints (including administrative agency charges or complaints, arbitral or judicial claims) against the regulated entity or the Office of Finance that—

(i) Claim employment discrimination, by basis or kind of the alleged discrimination (race, sex, disability, etc.) and by result (settlement, favorable, or unfavorable outcome);

(ii) Claim discrimination in any aspect of the contracting process or administration of contracts, by basis of the alleged discrimination and by result; and

(iii) Were resolved through the regulated entity's or the Office of Finance's dispute resolution procedure.

(16) Data showing for the reporting year amounts paid to claimants by the regulated entity or the Office of Finance for settlements or judgments on discrimination complaints—

(i) In employment, by basis of the alleged discrimination; and

(ii) In any aspect of the contracting process or in the administration of contracts, by basis of the alleged discrimination.

(17) A comparison of the data reported under paragraphs (b)(12) and (b)(13) of this section with the same information reported for the previous year;

(18) A narrative identification and analysis of the reporting year's activities the regulated entity or the Office of Finance considers successful and unsuccessful in achieving the purpose and policy of regulations in this part and a description of progress made from the previous year; and

(19) A narrative identification and analysis of business activities, levels, and areas in which the regulated entity's or the Office of Finance's efforts need to improve with respect to achieving the purpose and policy of regulations in this part, together with a description of anticipated efforts and results the regulated entity or the Office of Finance expects in the succeeding year.

§ 1207.24 Enforcement.

The Director may enforce this regulation and standards issued under it in any manner and through any means within his or her authority, including through identifying matters requiring attention, corrective action orders, directives, or enforcement actions under 12 U.S.C. 4513b and 4514. The Director may conduct examinations of a regulated entity's or the Office of Finance's activities under and in compliance with this part pursuant to 12 U.S.C. 4517.

Dated: January 4, 2010.

Edward J. DeMarco,

Acting Director, Federal Housing Finance Agency.

[FR Doc. 2010–111 Filed 1–8–10; 8:45 am]

BILLING CODE 8070–$$–P

SMALL BUSINESS ADMINISTRATION

13 CFR Parts 121 and 124

Small Business Size Regulations; 8(a) Business Development/Small Disadvantaged Business Status Determinations

AGENCY: U.S. Small Business Administration.

ACTION: Notice of public meetings; request for comments.

SUMMARY: The U.S. Small Business Administration (SBA) announces it is holding additional meetings in a series of public meetings on the topic of the proposed changes to the 8(a) Business Development (BD) Program Regulations and Small Business Size Regulations. Testimony and comments presented at the public comment meetings will become part of the administrative record as comments addressing the proposed changes to the regulations pertaining to the 8(a) BD program and small business size standards. In conjunction with the public meetings SBA is conducting tribal consultations prior to the end of the comment period for the proposed rulemaking.

DATES:

1. January 14, 2010, Miami, FL.
2. January 19, 2010, Los Angeles, CA.

ADDRESSES:

1. Miami, FL—SBA, South Florida District Office, 100 South Biscayne Boulevard, 7th Floor, Miami, FL 33131–2011. (Visitors will be subject to a security screening and might be required to present valid photo identification.)

2. Los Angeles, CA—SBA, Los Angeles District Office, 330 North Brand Blvd., Suite 1200, Glendale, CA 91203. (Visitors will be subject to a security screening and might be required to present valid photo identification.)

Send all written comments to Mr. Joseph Loddo, Associate Administrator for Business Development, U.S. Small Business Administration, 409 3rd Street, SW., Washington, DC 20416.

FOR FURTHER INFORMATION CONTACT: If you have any questions on this proposed rulemaking, call or email LeAnn Delaney, Deputy Associate Administrator, Office of Business Development, at (202) 205–5852, or *leann.delaney@sba.gov*. If you have any questions about registering or attending the public meeting please contact Ms. Latrice Andrews, SBA's Office of Business Development at (202) 205–5852, or *latrice.andrews@SBA.gov*, or by facsimile to (202) 481–4042.

SUPPLEMENTARY INFORMATION:

I. Background

On October 28, 2009 (74 FR 55694–55721), SBA issued a Notice of Proposed Rulemaking (NPRM). In that document, SBA proposed to make a number of changes to the regulations governing the 8(a) BD Program Regulations and several changes to its Small Business Size Regulations. Some of the changes involve technical issues. Other changes are more substantive and result from SBA's experience in implementing the current regulations. In addition to written comments, SBA is requesting oral comments on the various approaches for the proposed changes.

II. Public Hearings

The public meeting format will consist of a panel of SBA representatives who will preside over the session. The oral and written testimony will become part of the administrative record for SBA's consideration. Written testimony may be submitted in lieu of oral testimony. SBA will analyze the testimony, both oral and written, along with any written comments received. SBA officials may ask questions of a presenter to clarify or further explain the testimony. The purpose of the public meetings is to allow the general public to comment on SBA's proposed rulemaking. SBA requests that the comments focus on the proposed changes as stated in the NPRM. SBA requests that commentors do not raise issues pertaining to other SBA small business programs. Presenters may provide a written copy of their testimony. SBA will accept written material that the presenter wishes to provide that further supplements his or her testimony. Electronic or digitized copies are encouraged.

In conjunction with the public meetings SBA is conducting tribal consultations prior to the end of the comment period for the proposed rulemaking. The meeting notice for these tribal consultations was published in the **Federal Register** on December 7, 2009 (74 FR 64026).

The public meetings will be held on the dates listed below for each location from 9 a.m. to 4 p.m. each day.

VENUE INFORMATION

Location	Address	Hearing date	Registration closing date
Miami, FL	SBA South Florida District Office, 100 South Biscayne Boulevard, 7th Floor, Miami, FL 33131–2011.	January 14, 2010	January 11, 2010.
Los Angeles, CA	SBA Los Angeles District Office, 330 North Brand Blvd., Suite 1200, Glendale, CA 91203.	January 19, 2010	January 11, 2010.

* Visitors will be subject to a security screening and might be required to present valid photo identification.

Registration requests must be received on or before the respective deadline by 5 p.m., Eastern Standard Time.

III. Registration

Any individual interested in attending and making an oral presentation shall pre-register in advance with SBA. Registration requests must be received by SBA no later than 5 p.m., Eastern Standard Time. Please see registration information in this section for specific dates. Please contact Ms. Latrice Andrews of SBA's Office of Business Development in writing to register at *Latrice.Andrews@sba.gov* or by facsimile to (202) 481–4042. Please include the following information relating to the person testifying: Name, Organization affiliation, Address, Telephone number, e-mail address, and Fax number. SBA will attempt to accommodate all interested parties that wish to present testimony. Based on the number of registrants it may be necessary to impose time limits to ensure that everyone who wishes to testify has the opportunity to do so. SBA will send confirmation of registration in writing to the presenters and attendees.

IV. Information on Service for Individuals With Disabilities

For information on facilities or services for individuals with disabilities or to request special assistance at the public meetings, contact Ms. Latrice Andrews at the telephone number or e-mail address indicated under the **FOR FURTHER INFORMATION CONTACT** section of this notice.

Authority: 15 U.S.C. 632, 634(b)(6), 636(b), 637(a), 644 and 662(5); and Pub. L. 105–135, sec. 401 *et seq.,* 111 Stat. 2592

Joseph P. Loddo,

Associate Administrator for Business Development.

[FR Doc. 2010–318 Filed 1–7–10; 4:15 pm]

BILLING CODE 8025–01–P

DEPARTMENT OF TRANSPORTATION

Federal Aviation Administration

14 CFR Part 39

[Docket No. FAA–2009–1253; Directorate Identifier 2009–NM–080–AD]

RIN 2120–AA64

Airworthiness Directives; Boeing Model 737–600, –700, –700C, –800, –900, and –900ER Series Airplanes

AGENCY: Federal Aviation Administration (FAA), Department of Transportation (DOT).

ACTION: Notice of proposed rulemaking (NPRM).

SUMMARY: The FAA proposes to supersede an existing airworthiness directive (AD) that applies to all Boeing Model 737–600, –700, –700C, –800, –900, and –900ER series airplanes. The existing AD currently requires repetitive detailed inspections of the slat track downstop assemblies to verify that proper hardware is installed, one-time torquing of the nut and bolt, and corrective actions if necessary. This proposed AD would also require replacing the hardware of the down stop assembly with new hardware of the down stop assembly, doing a detailed inspection or a borescope inspection of the slat cans on each wing and the lower rail of the slat main tracks for debris, replacing the bolts of the aft side guide with new bolts, and removing any debris found in the slat can. This proposed AD also would remove airplanes from the applicability. This proposed AD results from reports of parts coming off the main slat track downstop assemblies. We are proposing this AD to prevent loose or missing parts from the main slat track downstop assemblies from falling into the slat can and causing a puncture, which could result in a fuel leak and consequent fire.

DATES: We must receive comments on this proposed AD by February 25, 2010.

ADDRESSES: You may send comments by any of the following methods:

- *Federal eRulemaking Portal:* Go to *http://www.regulations.gov*. Follow the instructions for submitting comments.
- *Fax:* 202–493–2251.
- *Mail:* U.S. Department of Transportation, Docket Operations, M–30, West Building Ground Floor, Room W12–140, 1200 New Jersey Avenue, SE., Washington, DC 20590.
- *Hand Delivery:* U.S. Department of Transportation, Docket Operations, M–30, West Building Ground Floor, Room W12–140, 1200 New Jersey Avenue, SE., Washington, DC 20590, between 9 a.m. and 5 p.m., Monday through Friday, except Federal holidays.

For service information identified in this proposed AD, contact Boeing Commercial Airplanes, *Attention:* Data & Services Management, P.O. Box 3707, MC 2H–65, Seattle, Washington 98124–2207; telephone 206–544–5000, extension 1; fax 206–766–5680; e-mail *me.boecom@boeing.com;* Internet *https://www.myboeingfleet.com.* You may review copies of the referenced service information at the FAA, Transport Airplane Directorate, 1601 Lind Avenue, SW., Renton, Washington. For information on the availability of this material at the FAA, call 425–227–1221 or 425–227–1152.

Examining the AD Docket

You may examine the AD docket on the Internet at *http://www.regulations.gov;* or in person at the Docket Management Facility between 9 a.m. and 5 p.m., Monday through Friday, except Federal holidays. The AD docket contains this proposed AD, the regulatory evaluation, any comments received, and other information. The street address for the Docket Office (telephone 800–647–5527) is in the **ADDRESSES** section. Comments will be available in the AD docket shortly after receipt.

FOR FURTHER INFORMATION CONTACT: Nancy Marsh, Aerospace Engineer, Airframe Branch, ANM–120S, FAA, Seattle Aircraft Certification Office, 1601 Lind Avenue, SW., Renton, Washington 98057–3356; telephone (425) 917–6440; fax (425) 917–6590.

SUPPLEMENTARY INFORMATION:

Comments Invited

We invite you to send any written relevant data, views, or arguments about this proposed AD. Send your comments to an address listed under the **ADDRESSES** section. Include "Docket No. FAA–2009–1253; Directorate Identifier 2009–NM–080–AD" at the beginning of your comments. We specifically invite comments on the overall regulatory, economic, environmental, and energy aspects of this proposed AD. We will consider all comments received by the closing date and may amend this proposed AD because of those comments.

We will post all comments we receive, without change, to *http://www.regulations.gov*, including any personal information you provide. We will also post a report summarizing each substantive verbal contact we receive about this proposed AD.

Discussion

On August 28, 2007, we issued AD 2007–18–52, amendment 39–15197 (72 FR 53928, September 21, 2007), for all Boeing Model 737–600, –700, –700C, –800, –900, and –900ER series airplanes. That AD superseded emergency AD 2007–18–51 to require a shorter compliance time for the actions originally required in emergency AD 2007–18–51. AD 2007–18–52 requires repetitive detailed inspections of the slat track downstop assemblies to verify that proper hardware is installed, one-time torquing of the nut and bolt, and corrective actions if necessary. That AD resulted from reports of parts coming off the main slat track downstop assemblies. We issued that AD to detect and correct loose or missing parts from the main slat track downstop assemblies from falling into the slat can and causing a puncture, which could result in a fuel leak and consequent fire.

Actions Since Existing AD Was Issued

The preamble to AD 2007–18–52 explains that we consider the requirements "interim action" and were considering further rulemaking. Since we issued AD 2007–18–52, Boeing has modified the hardware of the down stop assembly and the bolts of the aft side guide. The new modifications would terminate the actions required in AD 2007–18–52. We now have determined that further rulemaking is indeed necessary, and this proposed AD follows from that determination.

Relevant Service Information

We have reviewed Boeing Alert Service Bulletin 737–57A1302, dated December 15, 2008. The service bulletin describes procedures for replacing the hardware of the down stop assembly with new hardware, doing a detailed inspection or a borescope inspection of the slat cans on each wing and the lower rail of the slat main tracks for debris, replacing the bolts of the aft side guide with new bolts, and removing any debris found in the slat can.

FAA's Determination and Requirements of the Proposed AD

We have evaluated all pertinent information and identified an unsafe condition that is likely to develop on other airplanes of the same type design. For this reason, we are proposing this AD, which would supersede AD 2007–18–52 and would retain the requirements of the existing AD. This proposed AD would also require accomplishing the actions specified in the Relevant Service Information described previously. The proposed AD would also remove certain airplanes having line numbers 2700 and on from the applicability; these airplanes have a design change incorporated during production, which is an equivalent change to the actions described in the Relevant Service Information.

Change to Existing AD

This proposed AD would retain all requirements of AD 2007–18–52. As a result, the corresponding paragraph identifiers have changed in this proposed AD, as listed in the following table:

REVISED PARAGRAPH IDENTIFIERS

Requirement in AD 2007–18–52	Corresponding requirement in this proposed AD
paragraph (f)	paragraph (g).
paragraph (g)	paragraph (h).

Costs of Compliance

There are about 2,699 airplanes of the affected design in the worldwide fleet. The following table provides the estimated costs for U.S. operators to comply with this proposed AD.

ESTIMATED COSTS

Action	Work hours	Average labor rate per hour	Parts	Cost per airplane	Number of U.S.-registered airplanes	Fleet cost
Inspection and Torquing (required by AD 2007–18–52).	8	$80	$0	$640, per inspection cycle.	853	$545,920, per inspection cycle.
Inspection and Modification (new proposed actions).	18	80	5,388	6,828	853	5,824,284.

Authority for This Rulemaking

Title 49 of the United States Code specifies the FAA's authority to issue rules on aviation safety. Subtitle I, Section 106, describes the authority of the FAA Administrator. Subtitle VII, Aviation Programs, describes in more detail the scope of the Agency's authority.

We are issuing this rulemaking under the authority described in Subtitle VII, Part A, Subpart III, Section 44701, "General requirements." Under that section, Congress charges the FAA with promoting safe flight of civil aircraft in air commerce by prescribing regulations for practices, methods, and procedures the Administrator finds necessary for safety in air commerce. This regulation is within the scope of that authority because it addresses an unsafe condition that is likely to exist or develop on products identified in this rulemaking action.

Regulatory Findings

We have determined that this proposed AD would not have federalism implications under Executive Order 13132. This proposed AD would not have a substantial direct effect on the States, on the relationship between the national Government and the States, or on the distribution of power and responsibilities among the various levels of government.

For the reasons discussed above, I certify that the proposed regulation:

1. Is not a "significant regulatory action" under Executive Order 12866;

2. Is not a "significant rule" under the DOT Regulatory Policies and Procedures (44 FR 11034, February 26, 1979); and

3. Will not have a significant economic impact, positive or negative, on a substantial number of small entities under the criteria of the Regulatory Flexibility Act.

We prepared a regulatory evaluation of the estimated costs to comply with this proposed AD and placed it in the AD docket. *See* the **ADDRESSES** section for a location to examine the regulatory evaluation.

List of Subjects in 14 CFR Part 39

Air transportation, Aircraft, Aviation safety, Incorporation by reference, Safety.

The Proposed Amendment

Accordingly, under the authority delegated to me by the Administrator, the FAA proposes to amend 14 CFR part 39 as follows:

PART 39—AIRWORTHINESS DIRECTIVES

1. The authority citation for part 39 continues to read as follows:

Authority: 49 U.S.C. 106(g), 40113, 44701.

§ 39.13 [Amended]

2. The FAA amends § 39.13 by removing amendment 39–15197 (72 FR 53928, September 21, 2007) and adding the following new AD:

Boeing: Docket No. FAA–2009–+++++; Directorate Identifier 2009–NM–080–AD.

Comments Due Date

(a) The FAA must receive comments on this AD action by February 25, 2010.

Affected ADs

(b) This AD supersedes AD 2007–18–52.

Applicability

(c) This AD applies to Boeing Model 737–600, –700, –700C, –800, –900, and –900ER series airplanes, certificated in any category, as identified in Boeing Alert Service Bulletin 737–57A1302, dated December 15, 2008.

Subject

(d) Air Transport Association (ATA) of America Code 57: Wings.

Unsafe Condition

(e) This AD results from reports of parts coming off the main slat track downstop assemblies. The Federal Aviation Administration is issuing this AD to prevent loose or missing parts from the main slat track downstop assemblies from falling into the slat can and causing a puncture, which could result in a fuel leak and consequent fire.

Compliance

(f) You are responsible for having the actions required by this AD performed within the compliance times specified, unless the actions have already been done.

Restatement of AD 2007–18–52 With No Changes

Note 1: Paragraph (g) of this AD merely restates the requirements of paragraph (f)(1) of emergency AD 2007–18–51 (which was superseded by AD 2007–18–52). As allowed by the phrase, "unless the actions have already been done," if the applicable initial inspections required by paragraph (f)(1) of emergency AD 2007–18–51 have already been done, this AD does not require that those inspections be repeated until the repetitive interval of 3,000 flight cycles.

Repetitive Detailed Inspections

(g) Within 10 days after September 26, 2007 (the effective date of AD 2007–18–52): Do a detailed inspection or a borescope inspection of each main slat track downstop assembly to verify proper installation of the slat track hardware (i.e., the bolt, washers, downstops, stop location, and nut shown in Figure 1 of Boeing Service Letter 737–SL–57–084–B, dated July 10, 2007, and in this AD). Proper installation of the sleeve need not be confirmed, and the stop location part may be installed on either the inboard or the outboard side of the slat track. If any part is missing or is installed improperly, before further flight, install a new or serviceable part using a method approved in accordance with the procedures specified in paragraph (j) of this AD; and do a detailed inspection of the inside of the slat can for foreign object debris (FOD) and damage. Before further flight, remove any FOD found and repair any damage found using a method approved in accordance with the procedures specified in paragraph (j) of this AD. Verify proper installation; install a new or serviceable part; and inspect for damage and FOD, and remove FOD and repair damage, in accordance with a method by approved by the Manager, Seattle Aircraft Certification Office, FAA; or in accordance with Boeing Multi Operator Message Number 1–523812011–1, issued August 25, 2007; or 1–527463441–1, issued August 28, 2007. Repeat the actions required by paragraph (g) of this AD thereafter at intervals not to exceed 3,000 flight cycles.

Note 2: Paragraph (h) of this AD merely restates the requirements of paragraph (f)(2) of emergency AD 2007–18–51. As allowed by the phrase, "unless the actions have already been done," if the torque application required by paragraph (f)(2) of AD emergency 2007–18–51 has already been done, this AD does not require that the torque application be repeated.

One-Time Torquing

(h) Within 24 days after receipt of emergency AD 2007–18–51: Apply a torque between 50 to 80 inch-pounds to the nut. The bolt head must be held with the torque applied to the nut.

Note 3: For the purposes of this AD, a detailed inspection is: "An intensive examination of a specific item, installation, or assembly to detect damage, failure, or irregularity. Available lighting is normally supplemented with a direct source of good lighting at an intensity deemed appropriate. Inspection aids such as mirror, magnifying lenses, etc., may be necessary. Surface cleaning and elaborate procedures may be required."

BILLING CODE 4910–13–P

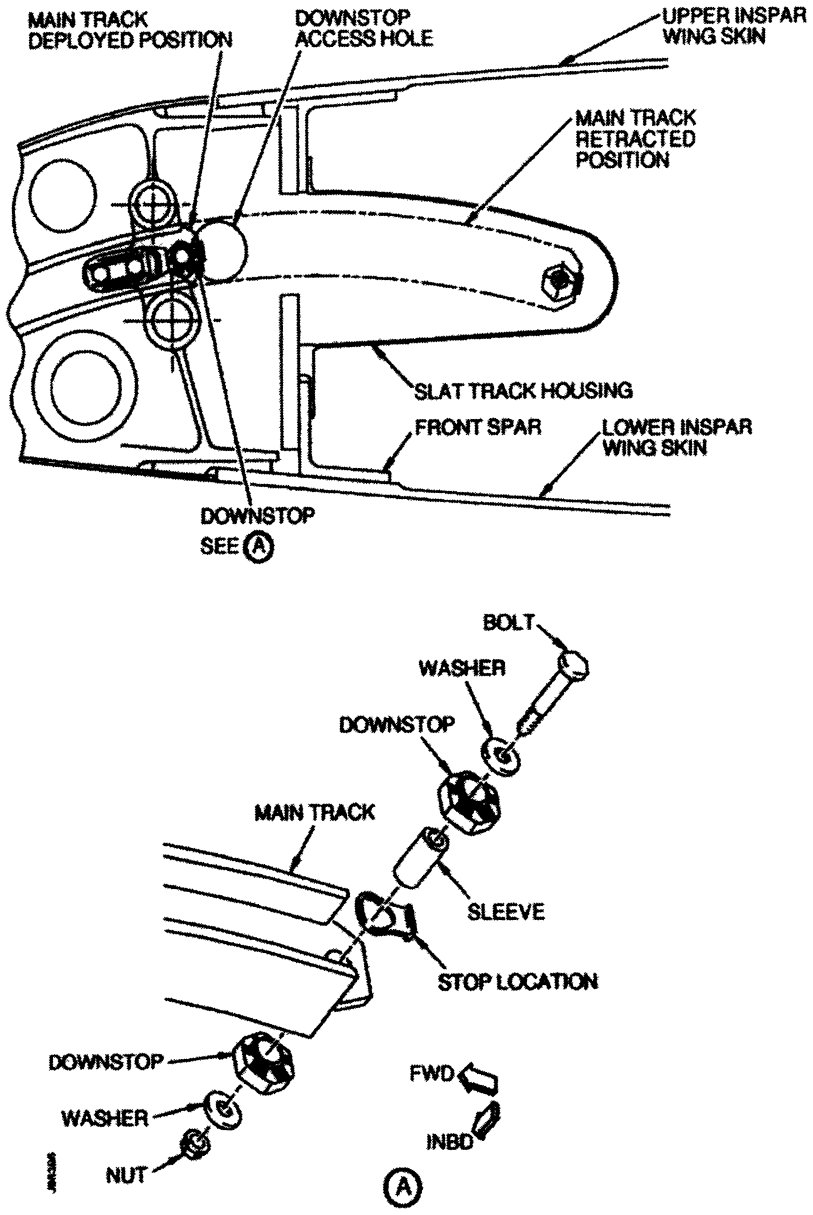

Slat Track Downstop Assembly

Figure 1

BILLING CODE 4910–13–C

New Requirements of This AD

Modification and Inspection

(i) Within 36 months after the effective date of this AD: Replace the hardware of the down stop assembly with new hardware, do a detailed inspection or a borescope inspection of the slat cans on each wing and the lower rail of the slat main tracks for debris, and replace the bolts of the aft side guide with new bolts, in accordance with the Accomplishment Instructions of Boeing Alert

Service Bulletin 737–57A1302, dated December 15, 2008 ("the service bulletin"); except, where the service bulletin specifies to replace the slat main track or contact Boeing for further repair instructions if the hole diameter is greater than 0.5005 inch, before further flight replace the slat main track in accordance with the service bulletin or repair using a method approved in accordance with the procedures specified in paragraph (j) of this AD. If debris is found during any inspection required by this AD, before further flight, remove the debris in accordance with the Accomplishment Instructions of the service bulletin. Doing the actions required by paragraph (i) of this AD terminates the actions required by paragraphs (g) and (h) of this AD.

Alternative Methods of Compliance

(j)(1) The Manager, Seattle Aircraft Certification Office (ACO), FAA, has the authority to approve AMOCs for this AD, if requested using the procedures found in 14 CFR 39.19. Send information to *Attn:* Nancy Marsh, Aerospace Engineer, Airframe Branch, ANM–120S, FAA, Seattle ACO, 1601 Lind Avenue, SW., Renton, Washington 98057–3356; telephone (425) 917–6440; fax (425) 917–6590. Or, e-mail information to *9-ANM-Seattle-ACO-AMOC-Requests@faa.gov.*

(2) To request a different method of compliance or a different compliance time for this AD, follow the procedures in 14 CFR 39.19. Before using any approved AMOC on any airplane to which the AMOC applies, notify your principal maintenance inspector (PMI) or principal avionics inspector (PAI), as appropriate, or lacking a principal inspector, your local Flight Standards District Office. The AMOC approval letter must specifically reference this AD.

(3) An AMOC that provides an acceptable level of safety may be used for any repair required by this AD, if it is approved by the Boeing Commercial Airplanes Organization Designation Authorization (ODA) that has been authorized by the Manager, Seattle ACO, to make those findings. For a repair method to be approved, the repair must meet the certification basis of the airplane, and the approval must specifically refer to this AD.

(4) AMOCs approved previously in accordance with AD 2007–18–52 are approved as AMOCs for the corresponding provisions of this AD.

Issued in Renton, Washington, on December 23, 2009.

Ali Bahrami,

Manager, Transport Airplane Directorate, Aircraft Certification Service.

[FR Doc. 2010–187 Filed 1–8–10; 8:45 am]

BILLING CODE 4910–13–P

DEPARTMENT OF THE TREASURY

Internal Revenue Service

26 CFR Part 1

[REG–127270–06]

RIN 1545–BF81

Damages Received on Account of Personal Physical Injuries or Physical Sickness; Hearing

AGENCY: Internal Revenue Service (IRS), Treasury.

ACTION: Notice of public hearing on proposed rulemaking.

SUMMARY: This document provides notice of public hearing on a notice of proposed rulemaking relating to the exclusion from gross income for amounts received on account of personal physical injuries or physical sickness.

DATES: The public hearing is being held on Tuesday, February 23, 2010, at 10 a.m. The IRS must receive outlines of the topics to be discussed at the hearing by Tuesday, February 2, 2010.

ADDRESSES: The public hearing is being held in room 2615, Internal Revenue Building, 1111 Constitution Avenue, NW., Washington, DC. Send submissions to: CC:PA: LPD:PR (REG–127270–06), room 5203, Internal Revenue Service, P.O. Box 7604, Ben Franklin Station, Washington, DC 20044. Submissions may be hand-delivered Monday through Friday between the hours of 8 a.m. and 4 p.m. to CC:PA:LPD:PR (REG–127270–06), Courier's Desk, Internal Revenue Service, 1111 Constitution Avenue, NW., Washington, DC. Alternatively, taxpayers may submit electronic outlines of oral comments via the Federal eRulemaking Portal at *http://www.regulations.gov.*

FOR FURTHER INFORMATION CONTACT: Concerning the regulations, Sheldon A. Iskow at (202) 622–4920; concerning submissions of comments, the hearing, and/or to be placed on the building access list to attend the hearing, Richard A. Hurst at *Richard.A.Hurst@irscounsel.treas.gov* or (202) 622–7180 (not toll-free numbers).

SUPPLEMENTARY INFORMATION: The subject of the public hearing is the notice of proposed rulemaking (REG–127270–06) that was published in the **Federal Register** on Tuesday, September 15, 2009 (74 FR 47152).

Persons who wish to present oral comments at the hearing that submitted written comments must submit an outline of the topics to be discussed and the amount of time to be devoted to each topic (signed original and eight (8) copies) by February 2, 2010.

A period of 10 minutes is allotted to each person for presenting oral comments. After the deadline for receiving outlines has passed, the IRS will prepare an agenda containing the schedule of speakers. Copies of the agenda will be made available, free of charge, at the hearing or in the Freedom of Information Reading Room (FOIA RR) (Room 1621) which is located at the 11th and Pennsylvania Avenue, NW. entrance, 1111 Constitution Avenue, NW., Washington, DC.

Because of access restrictions, the IRS will not admit visitors beyond the immediate entrance area more than 30 minutes before the hearing starts. For information about having your name placed on the building access list to attend the hearing, see the **FOR FURTHER INFORMATION CONTACT** section of this document.

LaNita Van Dyke,

Chief, Publications and Regulations Branch, Legal Processing Division, Associate Chief Counsel, Procedure and Administration.

[FR Doc. 2010–168 Filed 1–8–10; 8:45 am]

BILLING CODE 4830–01–P

POSTAL REGULATORY COMMISSION

39 CFR Part 3050

[Docket No. RM2010–7; Order No. 372]

Periodic Reporting

AGENCY: Postal Regulatory Commission.

ACTION: Proposed rule; notice of availability of rulemaking petition.

SUMMARY: The Postal Service has proposed adjustments to the methodology of a key element in the Parcel Select cost model. If adopted, the adjustments could affect the cost differences between certain Parcel Select price categories. The Commission is establishing a docket to consider this proposal and invites public comment.

DATES: Comments are due: January 8, 2010.

ADDRESSES: Submit comments electronically via the Commission's Filing Online system at *http://www.prc.gov.* Commenters who cannot file their views electronically should contact the person identified in "FOR FURTHER INFORMATION CONTACT" by telephone for advice on alternatives to electronic filing.

FOR FURTHER INFORMATION CONTACT: Stephen L. Sharfman, General Counsel, at 202–789–6824 or *stephen.sharfman@prc.gov.*

SUPPLEMENTARY INFORMATION:

I. Background
II. Commission Analysis
III. Ordering Paragraphs

I. Background

On December 22, 2009, the Postal Service filed a petition to initiate an informal rulemaking proceeding to consider changes in the analytical methods approved for use in periodic reporting.[1] Proposal Thirty would modify the billing determinants that are inputs to the cost models used to calculate the cost differences between the following price categories of Parcel Select: Inter-BMC, Intra-BMC, DBMC, DSCF, and DDU.

The Postal Service explains that during FY 2009, the Inter-BMC and Intra-BMC price categories of Parcel Select were merged into a "Nonpresort" category. It notes that the Commission approved a conforming change to the mail processing and transportation cost models for Parcel Select/PRS whereby billing determinant data that reflects the mail processing and transportation costs of the new Nonpresort price category are recorded and used.[2] As a result, the Postal Service explains, the billing determinant data used in these cost models consist of volume data for the Inter-BMC and Intra-BMC price categories for Quarters 1 through 3, and volume data for the new Nonpresort category in Quarter 4. Petition at 1.

The Postal Service therefore proposes to recast Quarter 4 billing determinants for the Nonpresort price category to be consistent with the disaggregated classification structure and cost models that prevailed during the first three quarters of FY 2009. It would do this by assigning the Quarter 4 Nonpresort volumes for zones 6 through 8 to the Inter-BMC volume distribution table in the billing determinants. The Quarter 4 Nonpresort volumes for zones 1 through 5 would be assigned to the Inter- and Intra-BMC categories in the same proportion that these categories exhibited in Quarters 1 through 3. *See* Proposal Thirty supporting material attached to the Petition.

The Postal Service explains that imputing the disaggregated volume distribution of Quarters 1 through 3 to Quarter 4 will approximately annualize the results of the classification structure that prevailed during most of FY 2009. It notes that the overall effect of Parcel Select results will be small because the Inter- and Intra-BMC categories account for a very small proportion of total FY 2009 Parcel Select volume. *Id.*

II. Commission Analysis

Proposal Thirty is a technical change to input data used in the Parcel Select cost models. It is designed to accommodate the transition of Parcel Select to a less disaggregated price structure. It is a one-time adjustment that will have no impact on cost estimation for Parcel Select going forward. The volume affected is small and unlikely to materially influence the financial results for Parcel Select for purposes of the FY 2009 Annual Compliance Report.

The Commission sets January 8, 2010 as the due date for public comments. Since Proposal Thirty does not appear to raise substantive issues, Proposal Thirty will be adopted as a final rule for purposes of reporting FY 2009 results if no adverse public comments are received by that date.

III. Ordering Paragraphs

It is ordered:

1. The Petition of the United States Postal Service Requesting Initiation of a Proceeding to Consider a Proposed Change in Analytic Principles (Proposal Thirty), filed December 22, 2009, is granted.

2. The Commission establishes Docket No. RM2010–7 to consider the matters raised in the Postal Service's Petition.

3. Interested persons may submit comments on Proposal Thirty no later than January 8, 2010.

4. John Klingenberg is designated to serve as the Public Representative representing the interests of the general public.

5. The Secretary shall arrange for publication of this Notice in the **Federal Register**.

By the Commission.

Shoshana M. Grove,

Secretary.

[FR Doc. 2010–179 Filed 1–6–10; 8:45 am]

BILLING CODE 7710–FW–S

[1] Petition of the United States Postal Service Requesting Initiation of a Proceeding to Consider a Proposed Change in Analytic Principles (Proposal Thirty), December 22, 2009 (Petition).

[2] *See* Docket No. RM2009–10, Order on Analytical Principles Used in Periodic Reporting (Proposals Three through Nineteen), November 13, 2009, at 36–38.

DEPARTMENT OF TRANSPORTATION

Pipeline and Hazardous Materials Safety Administration

49 CFR Parts 172, 173, 175

[Docket No. PHMSA–2009–0095 (HM–224F)]

RIN 2137–AE44

Hazardous Materials: Transportation of Lithium Batteries

AGENCY: Pipeline and Hazardous Materials Safety Administration (PHMSA), DOT.

ACTION: Notice of proposed rulemaking.

SUMMARY: PHMSA, in consultation with the Federal Aviation Administration (FAA), is proposing to amend requirements in the Hazardous Materials Regulations (HMR) on the transportation of lithium cells and batteries, including lithium cells and batteries packed with or contained in equipment. The proposed changes are intended to enhance safety by ensuring that all lithium batteries are designed to withstand normal transportation conditions. This would include provisions to ensure all lithium batteries are packaged to reduce the possibility of damage that could lead to a catastrophic incident, and minimize the consequences of an incident. In addition, lithium batteries would be accompanied by hazard communication that ensures appropriate and careful handling by air carrier personnel, including the flight crew, and informs both transport workers and emergency response personnel of actions to be taken in an emergency. These proposals are largely consistent with changes made to the United Nations Recommendations on the Transport of Dangerous Goods (UN Recommendations) and the International Civil Aviation Organization Technical Instructions on the Safe Transport of Dangerous Goods by Air (ICAO Technical Instructions) and respond to recommendations issued by the National Transportation Safety Board (NTSB).

DATES: Comments must be received by March 12, 2010.

We are proposing a mandatory compliance date of 75 days after the date of publication of a final rule in the **Federal Register**. In this NPRM, we solicit comments from interested persons regarding the feasibility of the proposed compliance date.

ADDRESSES: You may submit comments by any of the following methods:

• *Federal Rulemaking Portal: http://www.regulations.gov.* Follow the on-line instructions for submitting comments.
• *Fax:* 1–202–493–2251.
• *Mail:* Docket Management System; U.S. Department of Transportation, Dockets Operations, M–30, Ground Floor, Room W12–140, 1200 New Jersey Avenue, SE., Washington, DC 20590–0001.
• *Hand Delivery:* To U.S. Department of Transportation, Dockets Operations, M–30, Ground Floor, Room W12–140, 1200 New Jersey Avenue, SE., Washington, DC 20590–0001 between 9 a.m. and 5 p.m. Monday through Friday, except Federal holidays.

Instructions: Include the agency name and docket number PHMSA–2009–0095 (HM–224F) or RIN 2137–AE44 for this rulemaking at the beginning of your comment. Note that all comments received will be posted without change to *http://www.regulations.gov* including any personal information provided. If sent by mail, comments must be submitted in duplicate. Persons wishing to receive confirmation of receipt of their comments must include a self-addressed stamped postcard.

Privacy Act: Anyone is able to search the electronic form of any written communications and comments received into any of our dockets by the name of the individual submitting the document (or signing the document, if submitted on behalf of an association, business, labor union, etc.). You may review DOT's complete Privacy Act Statement in the **Federal Register** published on April 11, 2000 (65 FR 19477), or you may visit *http://www.regulations.gov.*

Docket: You may view the public docket through the Internet at *http://www.regulations.gov* or in person at the Docket Operations office at the above address (See **ADDRESSES**).

FOR FURTHER INFORMATION CONTACT: Charles E. Betts or Kevin A. Leary, Office of Hazardous Materials Standards, Pipeline and Hazardous Materials Safety Administration, telephone (202) 366–8553, or Janet McLaughlin, International & Outreach Division, Federal Aviation Administration, telephone 202–385–4897.

SUPPLEMENTARY INFORMATION:

Contents

I. Background
A. The Safety Problem
B. Overview of Current Regulations
C. Ongoing Efforts To Evaluate Lithium Battery Risk
II. Discussion of Proposed Regulatory Changes
A. Summary of Proposals in This NPRM
B. Evidence Preservation
C. New Shipping Names
D. Watt Hours Versus Equivalent Lithium Content
E. Design Type Testing
F. Elimination of Exceptions for Small Lithium Batteries
G. Packaging and Stowage
H. Consolidation of Lithium Battery Regulations
I. Ongoing Safety Initiatives
J. Compliance Date
III. Regulatory Analyses and Notices
A. Statutory/Legal Authority for This Rulemaking
B. Executive Order 12866 and DOT Regulatory Policies and Procedures
C. Executive Order 13132
D. Executive Order 13175
E. Regulatory Flexibility Act, Executive Order 13272, and DOT Procedures and Policies
F. Paperwork Reduction Act
G. Regulation Identifier Number (RIN)
H. Unfunded Mandates Reform Act
I. Environmental Assessment
J. Privacy Act
K. International Trade Analysis

I. Background

A. The Safety Problem

Lithium batteries are hazardous in transportation because they present both chemical (*e.g.,* flammable electrolytes) and electrical hazards. If not safely packaged and handled, lithium batteries can present a significant risk in transportation. Batteries which are misused, mishandled, improperly packaged, improperly stored, overcharged, or defective can overheat and ignite and, once ignited, fires can be especially difficult to extinguish. Overheating has the potential to create a thermal runaway, a chain reaction leading to self-heating and release of the battery's stored energy. In general, the risks posed by all batteries are a function of battery size and chemistry. The high energy density (*i.e.,* high energy to weight ratio) of lithium batteries increases the consequences of a short circuit or fire posing a greater risk in transportation.

Lithium batteries fall into one of two basic categories, lithium metal, including lithium alloy (also known as primary lithium batteries), and lithium ion, including lithium ion polymer (also known as secondary lithium batteries). As the name indicates, lithium metal batteries contain a small amount of metallic lithium or a lithium alloy. Batteries of this type are mostly non-rechargeable and these cells and batteries are often used in medical devices, computer memory and as replaceable batteries (AA and AAA size) suitable for electronic devices. The lithium content in these cells and batteries ranges from a fraction of a gram to a few grams and typical geometries include coin cells, cylindrical, and rectangular. Conversely, lithium ion cells and batteries contain a lithium compound (*e.g.,* lithium cobalt dioxide, lithium iron phosphate) and they are generally rechargeable. Lithium ion batteries are mostly found in portable computers, mobile phones and power tools. Common configurations are cylindrical and rectangular. The size of a lithium ion battery is currently measured by equivalent lithium content. Equivalent lithium content is described in greater detail in Part II, Section C "Watt Hours versus Equivalent Lithium Content."

Once used primarily in industrial and military applications, lithium batteries have become commonplace in consumer electronic devices because they have a much higher energy density compared to their predecessors (*e.g.,* alkaline, nickel cadmium, and nickel metal hydride batteries). They are now found in a variety of popular consumer items, including cameras, notebook computers, and mobile telephones. The numbers, types, and sizes of lithium batteries moving in transportation have grown steadily in recent years with the increasing popularity of these and other portable devices and a corresponding proliferation of battery designs, manufacturers, and applications. An estimated 3.3 billion lithium cells and batteries were transported worldwide in 2008 by all modes of transportation. On aircraft, lithium batteries are transported in shipments of batteries by themselves and they are also packed with or contained in battery powered equipment. Lithium batteries are also carried on board aircraft by passengers in portable electronic equipment and as spares; however these are not addressed in this rulemaking.

As the demand for lithium batteries increases, so do the risks associated with their transportation, especially on board aircraft. The risk of transporting lithium batteries on-board aircraft increases with the increase in the number of batteries transported by air, given the assumption that the proportion of the number of correctly packaged shipments to the total number of shipments remains constant. In other words, an increase in the number of shipments will result in an increase in the number of incidents even if the incident rate remains the same since the number of incidents is a product of the incident rate and the total number of batteries transported. Moreover, increasing the proportion of flights that transport only one lithium battery shipment introduces a risk where previously there was none. The risk of

multiple shipments on one aircraft increases the probability of an event within individual shipments, and also introduces the possibility of one defective shipment influencing other, properly packaged shipments on the same aircraft.

The increasing manifestation of these risks, inside and outside of transportation, drives the need for stricter safety standards. Since 1991, PHMSA and the FAA have identified over 40 air transport-related incidents and numerous additional non-transport incidents involving lithium batteries and devices powered by lithium batteries. These incidents occurred, variously, aboard passenger aircraft and cargo aircraft, prior to loading batteries aboard an aircraft, and after batteries were transported by air. Twenty-one of these 44 incidents involved a passenger aircraft. These incidents occurred in the cabin of the airplane, in a passenger's checked baggage, in the cargo area of the airplane or in the airport prior to boarding an aircraft. The incident data suggest overheating or damage to the device occurred immediately prior to the first indications of an incident. The remaining incidents involved lithium batteries transported aboard cargo aircraft. Many of these incidents were attributed to external short circuiting and several packages involved in the incidents were not subject to regulatory requirements for display of hazard communication markings or labels. It is important to note that while each single incident may appear relatively benign and while the overall incident numbers may appear small when compared to the total number of lithium batteries transported by aircraft each year, the incidents illustrate the short circuit and fire risks posed by lithium batteries and the potential for a serious incident that could result if the risks as not addressed through transportation safety controls. The following table shows a breakdown of these incidents:

	Passenger aircraft		Cargo on passenger aircraft	Cargo aircraft	Grand total
	Carry-on	Checked baggage			
Lithium Batteries	16	1	4	23	44

A list of aviation incidents involving batteries reported to the FAA since 1991 is available through the following URL: *http://www.faa.gov/about/office_org/headquarters_offices/ash/ash_programs/hazmat/aircarrier_info/.*

Besides these incidents involving air transportation of lithium batteries, there have been several recalls of lithium batteries used in notebook computers and other consumer commodities. The Consumer Product Safety Commission (CPSC) found that these batteries could spontaneously overheat and cause a fire, because of a manufacturing defect or when the battery is struck forcefully on the corner (*e.g.,* a direct fall to the ground).

In addition to incidents definitely attributed to lithium batteries, the NTSB investigated a February 7, 2006 incident at the Philadelphia International Airport in which a fire—suspected to have been caused by lithium batteries—destroyed a United Parcel Service cargo aircraft and most of its cargo. While the captain, first officer, and a flight engineer evacuated the airplane after landing, sustaining only minor injuries, the NTSB concluded that flight crews on cargo-only aircraft remain at risk from in-flight fires involving both primary (non-rechargeable) and secondary (rechargeable) lithium batteries. Following the incident investigation, NTSB issued the following recommendations to PHMSA:

Safety Recommendation A–07–104: Require aircraft operators to implement measures to reduce the risk of primary lithium batteries becoming involved in fires on cargo-only aircraft, such as transporting such batteries in fire resistant containers and/or in restricted quantities at any single location on the aircraft.

Safety Recommendation A–07–105: Until fire suppression systems are required on cargo-only aircraft, as asked for in Safety Recommendation A–07–99, require that cargo shipments of secondary lithium batteries, including those contained in or packed with equipment, be transported in crew-accessible locations where portable fire suppression systems can be used.

Safety Recommendation A–07–106: Require aircraft operators that transport hazardous materials to immediately provide consolidated and specific information about hazardous materials on board an aircraft, including proper shipping name, hazard class, quantity, number of packages, and location, to on-scene emergency responders upon notification of an accident or incident.

Safety Recommendation A–07–107: Require commercial cargo and passenger operators to report to the Pipeline and Hazardous Materials Safety Administration all incidents involving primary and secondary lithium batteries, including those contained in or packed with equipment, that occur either on board or during loading or unloading operations and retain the failed items for evaluation purposes.

Safety Recommendation A–07–108: Analyze the causes of all thermal failures and fires involving secondary and primary lithium batteries and, based on this analysis, take appropriate action to mitigate any risks determined to be posed by transporting secondary and primary lithium batteries, including those contained in or packed with equipment, on board cargo and passenger aircraft as cargo; checked baggage; or carry-on items.

Safety Recommendation A–07–109: Eliminate regulatory exemptions for the packaging, marking, and labeling of cargo shipments of small secondary lithium batteries (no more than 8 grams equivalent lithium content) until the analysis of the failures and the implementation of risk-based requirements asked for in Safety Recommendation A–07–108 are completed.

Safety Recommendation A–08–01: In collaboration with air carriers, manufacturers of lithium batteries and electronic devices, air travel associations, and other appropriate government and private organizations, establish a process to ensure wider, highly visible, and continuous dissemination of guidance and information to the air-traveling public, including flight crews, about the safe carriage of secondary (rechargeable) lithium batteries or electronic devices containing these batteries on board passenger aircraft.

Safety Recommendation A–08–02: In collaboration with air carriers, manufacturers of lithium batteries and electronic devices, air travel associations, and other appropriate government and private organizations, establish a process to periodically measure the effectiveness of your efforts to educate the air-traveling public, including flight crews, about the safe carriage of secondary (rechargeable) lithium batteries or electronic devices containing these batteries on board passenger aircraft.

Most of the recent lithium battery incidents have been determined to originate from packages in non-compliant shipments of lithium batteries. As a result, many feel that additional regulations will not help lower the number of incidents. PHMSA and FAA believe non-compliance most often arises from confusion concerning the regulatory requirements. This confusion typically results from a lack of proper training. Currently, shippers of small-size lithium batteries are excepted from the training requirements in Subpart H of Part 172 of the HMR. The proposals in this NPRM would require these shippers to train employees who prepare lithium battery shipments for transportation to ensure

the employees are knowledgeable about all the applicable regulatory requirements and that shipments conform to those requirements. The training requirements would also apply to air carrier employees; thus, training in the requirements applicable to the transportation of small lithium batteries would be included in the currently required air carrier training for acceptance, handling, and loading and unloading lithium battery packages.

The proposals in this NPRM would also subject packages of small-size lithium batteries to well-recognized hazardous materials marking and labeling requirements. These hazard communication provisions will ensure that packages of lithium batteries are placed into a well-established and high-functioning cargo transportation system that provides for more careful handling, more precise record keeping, and more detailed tracking and reporting than is typically provided for non-hazardous cargo.

In addition to markings and labels, the proposals in this NPRM would also require transport documentation to accompany a shipment of small-size lithium batteries. This includes notation of the presence and location of lithium batteries aboard the aircraft on the notice to the pilot in command (NOPIC). This will allow pilots and crew to make appropriate decisions in the event of an emergency. For example, if the flight crew identifies fire or smoke in a location where a lithium battery shipment is stowed, the crew can make an informed decision about the possible severity of the fire, whether the presence of lithium batteries could worsen the fire, and the time available to land the aircraft or take other emergency actions. The NOPIC also allows ground crew, firefighters and first responders to know how they should respond in case of an emergency because they will know not only that there are packages of lithium batteries aboard the aircraft, but also where on the aircraft these packages are located.

The hazardous materials regulatory system has for decades proven its effectiveness in mitigating hazardous materials transportation risk. Shippers and operators understand this system and have included steps in their processes to ensure compliance. However, lithium batteries have largely operated outside of this structure through the use of exceptions. This current exception-based system has created a set of regulations that is not easily understood or enforced. This, coupled with the lack of required training, adds to the difficulty of ensuring compliance. PHMSA and FAA believe the system created specifically for the transportation of hazardous materials is sound and can be used to effectively mitigate the risk posed by lithium batteries in air transportation.

B. Overview of Current Regulations

Currently, the HMR address lithium battery transportation safety through design type testing, short circuit protection, limits on battery size, and limits on net and gross weight. The HMR provide exceptions for small cells and batteries often found in consumer electronic devices.

Lithium batteries are regulated as a Class 9 material. Class 9 materials present a hazard during transportation but do not meet the definition of any other hazard class. The HMR prohibit the transport of primary lithium batteries as cargo on passenger aircraft unless packed with or contained in equipment. Packaging and design type testing requirements and exceptions for lithium batteries are found in § 173.185. For transportation by all modes, lithium batteries of all types and sizes must pass applicable tests in the UN Manual of Tests and Criteria. These tests are designed to ensure that the battery can withstand conditions normally encountered in transportation. In addition, the battery must be designed in a manner that precludes a violent rupture and must be equipped with an effective means of preventing external short circuits and a means to prevent reverse current flow if it contains cells that are connected in parallel.

Batteries transported as a Class 9 material must be packaged in combination packagings that conform to the performance standards specified in Part 178 of the HMR at the Packing Group II performance level. In addition, the batteries must be packaged so as to prevent short circuits, including movement that could lead to short circuits. A package containing lithium batteries must be labeled with a Class 9 label and must be accompanied by a shipping paper that describes the lithium batteries being transported and emergency response information. The location and quantity of shipments must also be provided to the pilot in command.

The HMR provide exceptions for lithium batteries based on the battery size and packing method. Generally, shipments of small lithium batteries are excepted from the specification packaging and hazard communication requirements outlined above provided each package containing more than 24 lithium cells or 12 lithium batteries is: (1) Marked to indicate that it contains lithium batteries and that special procedures must be followed if the package is known to be damaged; (2) accompanied by a document indicating that the package contains lithium batteries and that special procedures must be followed if the package is known to be damaged; (3) no more than 30 kilograms gross weight; and (4) capable of withstanding a 1.2 meter drop test in any orientation without shifting of the contents that would allow short-circuiting and without release of package contents. Further, each such package that contains a primary lithium battery or cell forbidden for transport aboard passenger carrying aircraft must be marked "PRIMARY LITHIUM BATTERIES—FORBIDDEN FOR TRANSPORT ABOARD PASSENGER AIRCRAFT" or "LITHIUM METAL BATTERIES—FORBIDDEN FOR TRANSPORT ABOARD PASSENGER AIRCRAFT." The marking, documentation and 1.2 meter drop test requirements described above do not apply when these small cells or batteries are contained in a piece of equipment.

For medium-size lithium batteries and cells transported by motor carrier or rail, the HMR provide exceptions similar to those for small lithium batteries. Under these exceptions, a package containing medium size lithium batteries and cells of all types must: (1) Be marked to indicate it contains lithium batteries and special procedures must be followed if the package is known to be damaged; (2) be accompanied by a document indicating the package contains lithium batteries and special procedures must be followed if the package is known to be damaged; (3) weigh no more than 30 kilograms; and (4) be capable of withstanding a 1.2 meter drop test. For those packages that are not prepared for air shipment, (*i.e.,* not offered and transported as a Class 9 material) the HMR require the package to be marked to indicate that they may not be transported by aircraft or vessel. The marking, documentation and 1.2 meter drop test requirements described above do not apply when these medium cells or batteries are contained in a piece of equipment.

The exceptions for small and medium size lithium batteries described above are found in § 172.102 Special Provisions 188 and 189 respectively. Additional exceptions for special cases such as small production runs of batteries and specific aircraft quantity limitations are found in § 172.102, Special Provisions 29, A54, A55, A100, A101, A103, and A104.

The current requirements in the HMR pertaining to the transport of lithium batteries reflect a number of actions taken by PHMSA and FAA in response

to the past incidents and NTSB recommendations, aimed at reducing the risks posed by batteries and battery powered devices in transportation. *These include*—

• Safety advisories issued by PHMSA to the public (64 FR 36743 [July 7, 1999]; 72 FR 14167 [Mar. 26, 2007]) and by the FAA to the airline industry on July 2, 1999, May 23, 2002 and August 3, 2007 to remind persons that batteries and electrical devices that contain batteries are prohibited for transport unless properly packaged to prevent the likelihood of creating sparks or generating dangerous heat.

• Changes to UN Recommendations in 2000 and the 2003–04 ICAO Technical Instructions based on proposals by the United States which (1) revised battery testing requirements and required testing of small lithium batteries, (2) adopted hazard communication and packaging requirements for small batteries, (3) eliminated an exception for medium-sized batteries, and (4) adopted limited exceptions for passengers and crew to carry lithium batteries and battery-powered equipment aboard an aircraft.

• A series of tests performed by FAA in 2004 concluded that the presence of a shipment of primary lithium batteries can significantly increase the severity of an in-flight cargo compartment fire and the fire suppression systems currently in use aboard passenger aircraft are ineffective.

• PHMSA's December 15, 2004 interim final rule (69 FR 75208, correction, 71 FR 56894 [Sept. 28, 2006]), based on the results of the FAA tests, adopted a limited prohibition on the transportation on passenger-carrying aircraft of primary lithium batteries.

• Further testing by FAA in 2006 concluded that flames produced by secondary lithium batteries and cells are hot enough to cause adjacent cells to vent and ignite, but currently approved fire suppression systems are effective on the electrolyte fire and prevent any additional fire from subsequent cell venting.

• PHMSA's August 9, 2007 final rule (72 FR 44930) finalized the December 15, 2004 interim final rule and (1) adopted design type testing of all lithium batteries in accordance with international standards, and (2) revised the exception for consumer electronic devices and spare lithium batteries carried by passengers and crew. The preamble to this final rule also discussed in more detail some of the prior incidents during transportation of lithium batteries, the FAA testing programs, the recalls of notebook computer batteries, and the rulemaking changes up to that time.

• PHMSA's January 14, 2009 final rule (74 FR 2199) addressed NTSB safety recommendations A–07–106 and A–07–107 by requiring an air carrier, in the event of a serious incident, to make immediately available to an authorized official of a federal, state, or local government agency (including an emergency responder), the shipping papers and notice to pilot in command or the information contained in those documents. This requirement represents a proactive approach to information dissemination similar to that in the ICAO Technical Instructions. This final rule also added a requirement to report all incidents that result in a fire, violent rupture, explosion or dangerous evolution of heat (*i.e.*, an amount of heat sufficient to be dangerous to packaging or personal safety to include charring of packaging, melting of packaging, scorching of packaging, or other evidence) that occurs as a direct result of a battery or battery-powered device. Additionally, the final rule amended regulatory requirements to clarify acceptable methods for packaging batteries to protect against short circuits and overheating and required the reporting of certain incidents involving batteries or battery powered devices. PHMSA set forth examples of methods to prevent short circuit and damage (such as individually packaging each battery, securely covering terminals with non-conductive caps or tape, or designing batteries with terminals that are recessed or otherwise protected) appropriate for all batteries.

• PHMSA and FAA have also conducted a campaign to educate the public about ways to reduce lithium battery transportation risks. On February 22, 2007; April 26, 2007; May 24–25 2007; and April 11, 2008, PHMSA hosted meetings with public and private sector stakeholders who share our concern for the safe transportation of batteries and battery powered devices. The meetings provided an opportunity for representatives of the NTSB, CPSC, manufacturers of batteries and battery powered devices, airlines, airline employee organizations (*e.g.,* pilots and flight attendants), testing laboratories, and the emergency response and law enforcement communities to share and disseminate information concerning battery related risks and developments.

The amendments to the HMR adopted since 2004 have produced positive results, but they addressed only very specific issues and specific transport contexts. The proposals outlined in this NPRM are intended to comprehensively address the hazards posed by lithium batteries in all modes of transportation and further reduce the likelihood and the consequences of a battery related fire in transportation. In this NPRM, PHMSA plans to address safety recommendations A–07–104, A–07–105, A–07–108 and A–07–109.

In addition to the safety measures identified in this NPRM, PHMSA and FAA are considering additional safety standards. Many of these additional measures affect multiple transport modes, including aviation. As we develop these concepts we will continue to work with the appropriate international transportation standards-setting bodies, such as the United Nations Subcommittee of Experts on the Transport of Dangerous Goods (UNSCOE TDG) and the International Civil Aviation Organization (ICAO) Dangerous Goods Panel, to encourage their world-wide acceptance. These additional measures may include:

• Establishing a new system for the classification of articles, such as lithium batteries that have the potential to produce heat and fire.

• Determining the feasibility of developing performance standards for fire resistant containers that can be used for the transport of lithium cells and batteries of all types and all other flammable materials on board aircraft.

• Examining the role of packaging in preventing damage and short circuits to lithium cells and batteries.

C. Ongoing Efforts To Evaluate Lithium Battery Risk

As previously mentioned, PHMSA and FAA have identified 44 air transport related incidents and numerous additional non-transport incidents involving lithium batteries and lithium battery powered devices. The January 14, 2009 final rule required air carriers to report all incidents that result in a fire, violent rupture, explosion or dangerous evolution of heat that occur as a result of a battery or a battery powered device. In addition to requiring an incident report NTSB, A–07–107 recommends PHMSA require air carriers retain the failed items for evaluation purposes. We have concerns with requiring a person involved in an incident reported under §§ 171.15 or 171.16 to maintain in a secure manner items or packages especially if the item is an airline passenger's property. Such a requirement would impose additional responsibility on the air carrier to maintain possession of the item or package in a secure manner. Currently, when an incident occurs, DOT works with the person in physical possession of the item such as a battery or device

to ensure the incident is thoroughly documented and when the air carrier has accepted the property (68 FR 9735) it is maintained and in some instances transported for evaluation. Depending on the nature and severity of the incident we work with carriers on a case-by-case basis to collect and analyze evidence as appropriate and we continue to seek ways to improve the quality and consistency of data we receive. As part of this NPRM, PHMSA seeks comments on how this data collection could be improved.

The proposals in this NPRM are intended to address the root causes of lithium battery incidents. The available incident data suggest the most likely causes of lithium battery incidents are:

1. *External short circuiting*—occurs when an exposed battery terminal contacts a metal object. When this happens, the battery can heat up and may cause ignition of the battery and/or the surrounding combustible materials.
2. *In-use situation*—generally relating to improper "charging" and/or "discharging" conditions associated with the use of equipment (*e.g.,* computer or cell phone). This also includes inadvertent activation and subsequent overheating (such was the case when a power drill activated and burned in a passenger's checked baggage).
3. *Non-compliance*—includes faulty design of the battery (cells or battery packs), false certification of compliance with regulatory testing/classification requirements, and improper packing and handling including some counterfeit batteries.
4. *Internal short circuit*—can be caused by foreign matter introduced into a cell or battery during the manufacturing process. An internal short circuit can also occur when a battery is physically damaged (*e.g.* dropped or punctured).

As noted in the previous section, FAA's Technical Center initiated a series of tests to evaluate the risk posed by lithium batteries involved in an unrelated fire. FAA completed a study in 2004 to assess the flammability characteristics of bulk packed primary lithium batteries and a second study in 2006 examining the flammability characteristics of bulk packed secondary lithium batteries. In both studies the tests were designed to simulate the behavior of the batteries in an environment that is similar to actual conditions possible in an aircraft cargo compartment fire. Both the 2004 and 2006 test reports are available at the following url: *http://www.fire.tc.faa.gov/reports/reports.asp*.

In the case of primary lithium batteries, the FAA tests showed that the packaging materials delayed the ignition of the batteries, but eventually added to the fire and contributed to battery ignition, even after the original (alcohol) fire had been exhausted. In addition, the packaging material held the batteries together, allowing the plastic outer coating to fuse the batteries together. This enhanced the probability of a burning battery igniting adjacent batteries, increasing the propagation rate. The technical report concluded that the presence of a shipment of primary lithium batteries can significantly increase the severity of an in-flight cargo compartment fire. In addition, the report concluded that primary lithium batteries pose a unique threat in the cargo compartment of an aircraft because primary lithium battery fires cannot be suppressed by means of Halon, the only FAA-certified fire suppression system permitted for use in cargo compartments of a passenger-carrying aircraft operating in the United States.

The second study completed in 2006 used a similar methodology to determine the flammability of secondary lithium batteries and cells. The testing demonstrated that flames produced by the batteries are hot enough to cause adjacent cells to vent and ignite. The testing also demonstrated that Halon is effective in suppressing the electrolyte fire and preventing any additional fire from subsequent cell venting. The lithium ion cells will continue to vent due to high temperatures but will not ignite in the presence of Halon.

We are aware of additional testing conducted in 2004 and 2005 independent of the FAA or PHMSA to assess the effect of a battery's state of charge on its overall risk. The 2004 preliminary report titled "Effect of Cell State of Charge on Outcome of Internal Cell Faults" concluded the severity of the result of an internal short circuit is strongly affected by the state of charge. The Draft 2005 report titled "US FAA Style Flammability Assessment of Lithium Ion Cells and Battery Packs in Aircraft Cargo Holds" concluded: (1) Direct flame impingement on small unpackaged quantities of lithium ion cells and battery packs can lead to thermal runaway; (2) Halon 1301 is effective at controlling burning lithium ion cells; (3) the fires had a minimal effect on bulk packaged lithium ion cells with less than 50% state of charge; and (4) the aircraft liner typically used on commercial aircraft is capable of withstanding burning gases discharged from venting lithium ion cells and batteries. A copy of this analysis is available for review in the docket of this rulemaking.

The FAA results with lithium ion batteries at 100% state of charge exposed to a fire showed similar, but more forceful results (*i.e.* more sparks, and more forceful cell venting). FAA and other test data on lithium ion cells and batteries suggest that state of charge affects their behavior under abuse conditions. PHMSA recognizes this fact and commonly requires transport at a reduced state of charge as a condition of competent authority approvals issued for the transport of extremely large lithium ion batteries found in vehicles and military and aerospace equipment. To date, we are not aware of any data that can be used to suggest a reduced state of charge affects the behavior of primary lithium batteries under abuse conditions.

The United Kingdom Civil Aviation Authority completed a report in 2003 titled: "Dealing with In-Flight Lithium Battery Fires in Portable Electronic Devices." The test results verified the effectiveness of existing fire extinguishing agents in responding to an in-flight fire involving a lithium battery powered portable electronic device. The report also concluded that the safety systems inherent to lithium batteries and battery powered devices decrease the likelihood of a fire, but since there is a potential for a fire, these devices must be considered a potential risk in flight and during ground based operations. If a fire does occur in the aircraft cabin, the force of the explosion is not sufficient to cause structural damage to the aircraft, but there is a risk the fire could spread to adjacent flammable material such as clothing and seats and flames and fumes from burning batteries pose a hazard to passengers in the immediate vicinity.

The UK CAA testing, combined with additional research from the FAA has formed the basis for improved response procedures and cabin crew fire fighting training. Since 2007, the International Federation of Airline Pilots Associations has issued several safety bulletins with updated recommendations for flight crew actions. In March of 2009, the FAA released a training video recreating in-flight scenarios which includes actual lithium battery fires and appropriate response measures. All of these test reports are available for review in the public docket for this rulemaking.

II. Discussion of Proposed Regulatory Changes

A. Summary of Proposals in This NPRM

In this NPRM, we propose a number of provisions to enhance the safe transportation of lithium batteries. The proposals are intended to reform the current regulatory framework specific to lithium batteries and strengthen the regulations by eliminating certain exceptions. These revisions will

enhance safety by ensuring that all lithium batteries are designed to withstand normal transportation conditions, packaged to reduce the possibility of damage that could lead to an incident, and accompanied by hazard communication information that ensures appropriate and careful handling by air carrier personnel and informs transport workers and emergency response personnel of actions to be taken in an emergency. The additional hazard communication information will also provide the pilot in command with additional information about the location and quantity of lithium batteries should an unrelated fire require emergency measures. Several of the proposals are based on recommendations issued by the NTSB. Specifically, in this NPRM, we propose to:

- Revise current shipping descriptions for lithium batteries (UN3090), lithium batteries packed with equipment (UN3091), and lithium batteries contained in equipment (UN3091) to specify lithium metal batteries *including lithium alloy batteries* as appropriate.[a]
- Adopt shipping descriptions for lithium ion batteries *including lithium ion polymer batteries* (UN3480), lithium ion batteries packed with equipment *including lithium ion polymer batteries* (UN3481), lithium ion batteries contained in equipment *including lithium ion polymer batteries* (UN3481).[a]
- Adopt watt-hours in place of equivalent lithium content to measure the relative hazard of lithium ion cells and batteries.
- Incorporate by reference the latest revisions to the United Nations Manual of Tests and Criteria applicable to the design type testing of lithium cells and batteries.
- Adopt and revise various definitions including "Aggregate lithium content" "Lithium content", "Lithium ion cell or battery", "Lithium metal cell or battery", "Short circuit", and "Watt-hour" based on definitions found in the UN Manual of Tests and Criteria.
- Require manufacturers to retain results of satisfactory completion of UN design type tests for each lithium cell and battery type and place a mark on the battery and/or cell to indicate testing has been completed successfully. PHMSA and the FAA will coordinate with the appropriate international organizations to ensure consistency.
- For air transportation, eliminate regulatory exceptions for lithium cells and batteries, other than certain exceptions for extremely small lithium cells and batteries that are shipped in very limited quantities such as button cells and other small batteries that are packed with or contained in equipment and those required for operational use in accordance with applicable airworthiness requirements and operating regulations.
- For all transport modes, require lithium cells and batteries to be packed to protect the cell or battery from short circuits.
- Unless transported in a container approved by the FAA Administrator, when transported aboard aircraft, limit stowage of lithium cells and batteries to crew accessible cargo locations or locations equipped with an FAA approved fire suppression system.
- Consolidate and simplify current and revised lithium battery requirements into one section of the HMR.
- Apply appropriate safety measures for the transport of lithium cells or batteries identified as being defective for safety reasons, or those that have been damaged or are otherwise being returned to the manufacturer.

To expedite compliance with the amendments in this notice, we are proposing a mandatory compliance date of 75 days after the date of publication of the final. The following sections discuss these changes in detail:

B. Evidence Preservation

In this NPRM, in § 171.21, we propose to require a shipper, carrier, package owner or person reporting an incident under the provisions of §§ 171.15 or 171.16 to provide upon request, by an authorized representative of the Federal, State or local government agency reasonable assistance in investigating the damaged package or article, if available.

C. New Shipping Names

Currently, under the HMR, lithium metal batteries and lithium ion batteries share the same UN number. However, differences in chemistry, functionality, and behavior when exposed to a fire are well documented. Based in part on the previously mentioned FAA fire tests, PHMSA imposed additional requirements on lithium metal (primary) batteries including prohibiting them from transportation aboard passenger aircraft, unless packed with or contained in equipment. The fact that both lithium metal and lithium ion batteries share the same UN number yet are regulated differently has the potential to cause problems in acceptance procedures for carriers and may unnecessarily hinder or delay the transportation of these products.

In 2006, the UN Recommendations adopted separate shipping names and ID numbers for lithium metal and lithium ion batteries. The ICAO and the International Maritime Organization subsequently adopted these entries into their respective dangerous goods lists effective January 1, 2009. While the HMR permit the use of the ICAO Technical Instructions and the International Maritime Dangerous Goods (IMDG) Code for international and for domestic transportation when a portion of the transportation is by aircraft or vessel, subsequent domestic reshipping of packages containing lithium batteries remains difficult.

In this NPRM, PHMSA proposes to provide two separate entries in the hazardous materials table for primary lithium batteries, now referred to as "lithium metal batteries" and secondary lithium batteries, now referred to as "lithium ion batteries". Separate entries for lithium metal and lithium ion batteries will facilitate the transportation of these materials through various modes, both domestically and internationally, and enable the application of different emergency response actions. We will replace all references to "primary lithium batteries" with "lithium metal batteries" and all references to "secondary lithium batteries" with "lithium ion batteries".

D. Watt Hours Versus Equivalent Lithium Content

When requirements for lithium ion batteries were first adopted into the HMR, it was necessary to provide an indication of the lithium content in each cell and battery. Since lithium ion batteries do not contain metallic lithium, an expression of lithium content analogous to lithium metal batteries was devised. This term became known as equivalent lithium content (ELC), also known as lithium equivalent content. The ELC of a lithium ion cell measured in grams is calculated to be 0.3 times the rated capacity in ampere hours. The ELC of a lithium ion battery equals the sum of the grams of ELC contained in the component cells of the battery. Although the term equivalent lithium content is used in the HMR, this term is not widely used or understood and can lead to confusion when calculating the ELC of a battery. For

[a] In 2006, separate shipping descriptions for lithium metal batteries and lithium ion batteries were adopted into the UN Recommendations. The International Civil Aviation Organization and the International Maritime Organization subsequently adopted these shipping descriptions. All references to primary or secondary lithium batteries in international regulations were revised to reflect this change.

example, the aggregate ELC for a lithium ion battery consisting of multiple cells within a battery can be difficult to calculate based solely on the ampere-hour capacity of the battery. Information on the ampere-hour capacity of the component cells within a battery is not normally provided and the ampere-hour capacity of a battery can change depending on the configuration of component cells within a battery.

PHMSA proposes to adopt a methodology for determining the relative strengths of lithium ion batteries using measurements of watt-hours rather than ELC. The term watt-hour, expressed as (Wh) is commonly used in electrical applications. The watt-hour value of a lithium ion cell or battery is determined by multiplying a cell or battery's rated capacity in ampere-hours, by its nominal voltage. Therefore, watt-hour (Wh) = ampere-hour (Ah) × Volts (V). This product is easy to calculate for both cells and batteries and the watt-hour measurement is independent of how the component cells within a lithium ion battery are connected.

PHMSA further proposes to replace the term equivalent lithium content, or lithium equivalent content and aggregate equivalent content each place it appears with watt-hour and replace the equivalent lithium content values with their equivalent watt-hour values. These proposals are consistent with proposals already adopted in the UN Recommendations, ICAO Technical Instructions, and IMDG Code.

E. Design Type Testing

Each lithium cell or battery is required to be of a type proven to meet the requirements of each test in the UN Manual of Tests and Criteria.[b] These tests are designed to ensure that the cells and batteries will withstand exposure to severe environmental conditions encountered during transport without resulting in a short circuit or a rupture. A comparison of the battery appearance before and after these tests is intended to detect battery damage such as leakage or abnormal venting, disintegration, cracking, swelling or distortion of the battery pack, or any other observation that could indicate the occurrence of an internal short circuit or constitute a transportation safety hazard. Certain tests, including altitude simulation, thermal, vibration and shock tests are designed to simulate extremes that may be encountered during transport. External short circuit, impact, overcharge and forced discharge tests are included, as these conditions contribute to short circuits and other potentially hazardous conditions.

An informal lithium battery working group of the United Nations Subcommittee of Experts on the Transport of Dangerous Goods (UNSCOE TDG) met in November 2008 and again in April 2009 to discuss the test methods relevant to lithium cells and batteries as contained in the UN Manual of Tests and Criteria. The group concluded that while the design type tests outlined in the UN Manual of Tests and Criteria adequately address safety concerns involving lithium cells and batteries, they can be improved based on an evolving understanding and use of lithium battery technology.

Recently, interest in adding an internal short circuit test into the UN Manual of Tests and Criteria has grown. Several different tests have been developed; however, each method has strengths and weaknesses including repeatability and the ability to control the mechanism of the internal short circuit. While no consensus has been reached on this subject, research and discussion continues. Once a reliable internal short circuit test method is developed and incorporated into the UN Manual of Tests and Criteria, we will consider adopting this additional test into the HMR. We invite commenters to address issues related to the development of an internal short circuit test, including recommendations on an appropriate and effective test methodology, real-world experience in applying such a test, and the costs that would be associated with an additional test requirement.

In December 2008, the UN Committee of Experts adopted several amendments to section 38.3 of the UN Manual of Tests and Criteria (fourth revised edition), which we propose to incorporate by reference in § 171.7. *These changes include:*

- Modifications to the terms "module" and "battery assembly", new definitions for the terms "large battery" and "small battery" and modifications to the testing protocol for large batteries and battery assemblies.
- Revised criteria for a different design type by adding additional criteria for rechargeable lithium cells and batteries that would trigger a new round of design-type testing.

Currently, the UN Manual of Tests and Criteria specifies that a change from a tested design type of 0.1 grams or 20% by mass to the anode, the cathode, or electrolyte material constitutes a change in the design of the battery requiring design-type testing. A change that would materially affect the test results is also considered a new design type requiring retesting. While we continue to believe in the importance of harmonization with international standards, we believe a change of 20% by mass to the anode, cathode, or electrolyte material by mass is too high. Additionally, the language referencing a "change that would materially affect the test results" remains too broad and leaves a great deal to interpretation from the individual cell or battery manufacturer or assembler. In this NPRM we propose to require a change of 0.1 grams or 5% by mass to the anode cathode or electrolyte material from a tested design type to constitute a new design and require retesting. Depending on the lithium content, such a change would affect the test results. In addition, we propose to include the examples of changes that could materially affect the test results developed by the informal UN working group. These examples include:

- A change in the material of the anode, the cathode, the separator, or the electrolyte;
- A change of protective devices, including hardware and software;
- A change of safety design in cells or batteries, such as a venting valve;
- A change in the number of component cells;
- A change in connecting mode of component cells.

In recent years, lithium battery technology has been developed for use in electric vehicles, hybrid electric vehicles and plug-in hybrid electric vehicles. The batteries now being utilized in hybrid electric vehicles are assemblies that include systems of electronic controllers, sensors, air flow ducts, cabling, cell mounting fixtures, cells, trays, covers, and attachment brackets and are much larger than lithium batteries found in consumer electronic devices (vehicle battery sizes generally have a gross mass between 14 kg and 80 kg). While the current UN Test standards and the HMR are broad enough in scope to accommodate extremely large batteries and assemblies, some believe the forces required by some of the UN tests are excessive and certain HMR requirements hamper the commercial development of this technology.

[b] As previously discussed, shipments of small lithium cells and batteries have been prohibited on passenger-carrying aircraft since December 15, 2004, but, before October 1, 2009, small lithium cells and batteries that met certain limited packaging and hazard communication conditions could be shipped by surface transportation (and small secondary lithium cells and batteries could be shipped on cargo-only aircraft), without being subject to the testing requirements in the UN Manual of Tests and Criteria. Small lithium cells and batteries were defined as follows: Cells with up to 1 g lithium (primary) or 1.5 equivalent lithium content (ELC) (secondary); batteries with up to 2 g lithium (primary) or 8 g ELC.

Because these new lithium battery applications may require modifications to the UN Manual of Tests and Criteria and revisions to the HMR, we issue competent authority approvals on a case-by-case basis and continue to actively participate in the advancement of modified testing schemes and practical methods that support the development of this technology without compromising safety. Based on transportation experience gained through competent authority approvals, we may consider revising the HMR to more adequately address these scenarios, provided we can do so without creating adverse safety consequences.

The cell and battery design type tests outlined in the UN Manual of Tests and Criteria are generally completed prior to the initial shipment of a battery from the manufacturer. While we believe most cell and battery manufacturers ensure the appropriate tests are conducted and the batteries and devices are safe for use, we remain uncertain that all manufacturers or battery assemblers take such steps or are even aware of the need to test each battery design type. We also remind battery manufacturers and assemblers that each lithium battery design-type is subject to the tests in the UN Manual of Tests and Criteria, even if the cells that make up the battery have been tested.

In this NPRM, we propose to require cell and battery manufacturers to retain evidence of satisfactory completion of each of the lithium cell and battery design type tests outlined in the UN Manual of Tests and Criteria. This evidence must be maintained in a readily accessible location at the principal place of business for as long as the lithium batteries are offered for transportation in commerce and for one year thereafter. Each person required to maintain this evidence must make this information available for inspection by a representative of a federal, state or local government agency. Since cell and battery design type tests already must be completed prior to transport we do not believe this should be a particularly burdensome requirement.

Additionally, we are considering a requirement for a visible quality mark to appear on the outside case of each cell or battery. This mark would signify successful completion of the required lithium battery design type tests in a readily recognizable manner. Visible quality marks on electronic devices are very common. Familiar examples include the UL symbol meaning a particular product has been evaluated and representative samples have been tested by Underwriters Laboratories and those products meet particular requirements for safety and quality. The CE marking certifies compliance with certain European Union Directives. For the purposes of lithium design type testing, we are considering requiring a UN symbol, identical to the symbol currently required on UN packagings and UN cylinders to appear on all cells and batteries that have met each of the design type tests prescribed in the UN Manual of Tests and Criteria. Below is an example of the mark we are considering:

This mark is readily recognized throughout the world and is generally associated with hazardous materials transportation. The intended effect of these new provisions is to promote knowledge of the UN Tests throughout the world and enhance compliance with these important safety standards. We intend to develop proposals for a quality mark and associated documentation for inclusion in the UN Model Regulations and the UN Manual of Tests and Criteria. We invite commenters to address these concepts. Based on comments from the public in response to this notice and discussion with the UN SCOE TDG, we may adopt the UN Marking or a similar mark in the final rule.

F. Elimination of Exceptions for Small Lithium Batteries

As noted above, since October 1, 2009, the HMR except small lithium cells and batteries from most HMR requirements provided the cells or batteries meet the test requirements in the UN Manual of Tests and Criteria and the shipment conforms to minimal packaging and hazard communication requirements (see Special Provision 188 in § 172.102(c)). Consistent with NTSB Safety Recommendation A–07–109, in this NPRM we propose to eliminate the regulatory exceptions for lithium cells and batteries when transported aboard aircraft. Thus, small lithium batteries and cells would be required to be offered for transportation as Class 9 materials and would be subject to the requirements for lithium cells and batteries in § 173.185, including the packaging requirements discussed in the next section and the hazard communication requirements (shipping papers, package marking and labeling) that apply to shipments of Class 9 materials.

In cargo transportation, generally packages are treated as either regulated hazardous materials or non-regulated general cargo. Packages that display a hazardous materials label are typically handled in a separate cargo stream to ensure more direct oversight than non-regulated cargo. Those materials that are regulated as hazardous materials are recognized by handlers, who ensure that proper precautions are taken and the package is handled in accordance with all applicable regulatory requirements.

The proposals outlined in this NPRM have the net effect of moving a discrete number of shipments of lithium cells and batteries that are currently handled as general cargo into the hazardous material transport system. When lithium batteries are offered for transportation as a Class 9 material, the package itself provides a clear indication of the presence of hazardous material that is readily recognized by transport workers and ensures these packages are handled in a manner appropriate to their hazard. This also ensures that individuals responsible for ensuring the safety of these packages are appropriately trained in accordance with the HMR. We believe most air carriers who accept lithium batteries for transportation also accept other hazardous materials for transportation and already have the necessary personnel and procedures in place to handle these packages safely. Thus, the requirement to identify and package lithium batteries as Class 9 materials provides significant safety benefits without imposing large additional costs on air carriers.

Air carriers are required during the certification process to declare in their Operating Specifications if a business decision has been made to "carry hazardous materials" or a business decision has been made "to prohibit the carriage of hazardous material". Each air carrier who elects to carry hazardous material must include handling procedures, incident reporting procedures, and other information in its operations manual for the appropriate personnel to follow, as well as a hazardous material training program that is approved by FAA and provided every 24 months to all appropriate persons. This training would include recognition of all hazard communication information that would be associated with lithium battery shipments as they are trained to recognize all hazard class labels, marking and documentation.

Under the HMR, materials that pose a specific and serious air transportation

risk are regulated more stringently than materials that pose less of a risk when transported by air. Lithium batteries are a current exception to this standard. The need to fully regulate these items and to aggressively enforce all applicable regulatory requirements is critical to air safety. Once lithium batteries are fully regulated, enforcement agencies will be able to take appropriate action against non-compliant shipments, reducing the number of non-compliant packages and therefore, reducing the number of lithium battery incidents.

We note the ICAO Technical Instructions include provisions for certain lithium cells and batteries, provided outer packages are marked with a lithium battery handling label. This handling label shown below notes the presence of lithium batteries and communicates a fire hazard if damaged. While this handling label is not specifically authorized by the HMR, we believe that it complements the basic intent of identifying the materials adequately for emergency response and we would permit packages containing lithium batteries to display the lithium battery handling label in addition to the markings and labels required by the HMR. The ICAO lithium battery handling label is displayed below:

The Class 9 label would alert transport workers to the presence of a hazardous material and should result in more careful handling and stowage. Shipping papers would provide written notice to the pilot in command of the presence of lithium batteries and the type, location and number of packages of lithium batteries on board the aircraft. The NOPIC serves as a valuable tool to relay information about the hazardous materials on board an aircraft to first response personnel and provide critical safety information when making decisions in emergency situations. The additional information will also assist carriers in the acceptance and handling of shipments. The hazardous material regulatory system has been effective in mitigating risk for decades. Shippers and carriers understand this system and have included steps in their processes to ensure compliance and safety. Operating outside of the regulatory structure has created a safety environment that is haphazard, at best, and a set of requirements that is not easily understood. The lack of required training only adds to the difficulty. PHMSA and FAA believe the current system for the transportation of hazardous materials is sound and can be used to effectively mitigate the risk posed by the batteries in air transportation.

A requirement for small lithium batteries and cells to be transported as Class 9 materials will have significant safety benefits that will more than offset any additional transportation costs that may result. PHMSA invites comments on the impacts associated with elimination of existing regulatory exceptions and the risk reduction benefits associated with eliminating the exceptions.

To reduce compliance costs and facilitate multimodal transportation without sacrificing safety, in § 173.185(d) we propose to specify provisions for the transportation of lithium cells and batteries by highway, rail and vessel consistent with the IMDG Code. In addition, we propose specific requirements for extremely small batteries with very low energy (*e.g.,* less than 0.3 grams or 3.7 Wh) when packed with or contained in equipment. When contained in equipment, these types of batteries are often embedded into circuit boards and are well protected from damage and pose a negligible risk. We are seeking comments on whether certain exceptions are appropriate from a risk and cost perspective. Such exceptions would include lithium ion batteries shipped at a reduced state of charge (*e.g.* less than 50% state of charge) or "very low energy" batteries (3.7Wh) packed or contained in equipment.

On December 15, 2008, we received a petition (P–1533) from the Air Transport Association of America and the Regional Airline Association requesting we amend the HMR to permit airlines to carry a limited number of small lithium batteries in the aircraft cabin in a constant state of readiness with adequate backup power for the duration of the flight. The petition states such necessary equipment includes electronic flight bags, onboard medical monitoring devices, portable oxygen concentrators, personal entertainment devices and credit card readers. We agree a need exists for airlines to use and maintain certain types of equipment that are increasingly powered by lithium batteries. Under Federal Aviation Regulations, these devices must be approved by the FAA to ensure they will not cause interference with the navigation or communication system of the aircraft on which it is to be used and crew members can safely handle these devices and batteries. In this NPRM we propose to modify § 175.8 to allow other items approved by the FAA Administrator to be used on board an aircraft. FAA will provide additional information published in an upcoming INFO to supplement this requirement.

G. Packaging and Stowage

The risks associated with the transport of lithium cells and batteries are largely a function of the amount of stored energy in a single cell or battery and the number of batteries in a shipment or a package. In addition, factors such as battery chemistry, state of charge, transport mode, type and method of packaging, quality of manufacturing, age, and handling all contribute varying amounts to the overall risks in transportation. Understanding and addressing these risks pose unique challenges to U.S. and international regulatory bodies.

The available incident data suggest external short circuiting is a leading cause of lithium battery incidents. Effective insulation of exposed terminals, designing batteries with recessed terminals and other such measures would help to prevent incidents resulting from external short circuits. To reduce the potential of short-circuiting, in this NPRM we are proposing to require lithium cells and batteries to be transported in inner packagings of combination packagings that completely enclose the cell or battery. The intent of the requirement for inner packaging is to ensure that the conductive terminals of batteries remain isolated from each other. This can be achieved in many ways including individually packing each cell or battery or packing batteries in blister packs commonly found in retail outlets where the batteries would be contained between paperboard card and transparent clear plastic. We continue to stress the intent of the packaging is to protect the batteries from short circuits and damage. The above examples are provided only to enhance understanding of the packaging requirement and not to limit the acceptable packaging methods used for compliance.

For air transportation, the HMR impose per-package weight limitations for lithium cells and batteries. However, there are no limits on the number of packages that may be transported in an overpack, unit load device, or cargo compartment. PHMSA and FAA are concerned about the aggregate risks inherent in transportation situations in which a large number of packages each containing small-sized batteries, are transported in close proximity to one another. Indeed, the risks inherent in the transportation of multiple packages of small-sized batteries may be more serious than the risks associated with a small number of packages containing large-sized batteries. Currently, packages containing up to 24 cells or 12 batteries may be transported without marks or labels indicating the presence of lithium batteries. Further, a single battery shipment may consist of many packages, each of which is excepted from the packaging and hazard communication requirements. An individual battery will pose a fire risk that can be exacerbated by poor packaging and careless handling and, the number of batteries in a shipment can substantially affect the severity of an incident. For example, several thousand small lithium batteries consolidated together may present more significant potential risks than a shipment of a single large lithium battery, because one burning lithium battery can produce enough heat and energy to propagate to other lithium batteries in the same overpack, freight container, or cargo hold.

PHMSA and FAA are aware of one incident that involved a shipment of 120,000 lithium metal batteries contained in small packages, each excepted from the HMR. The pallets containing the packages were mishandled by ground crew personnel, which led to their eventual ignition. Initial attempts to extinguish the fire with water and chemical fire extinguishers were ineffective. More recently, PHMSA and FAA observed an incident involving lithium metal batteries contained in personal disposable vaporizers. The shipment consisted of 40 cartons with each package containing 50 devices. Upon landing at their destination, the flight crew was alerted to a fire in the forward compartment. Fire department personnel successfully extinguished the fire with no injury or damage to the aircraft. These two examples illustrate the potential for a serious incident that could result if the risks are not addressed through transportation safety controls. Both the 2004 and 2006 FAA technical reports show that an increase in the number of batteries involved increases the duration of a fire. Currently, fire suppression systems are not required in all cargo compartments of cargo only aircraft. Therefore, even though Halon fire suppression systems are effective at suppressing a fire involving lithium ion batteries, flight crews on cargo only aircraft remain at risk. In this NPRM we are proposing several actions intended to mitigate this risk. Specifically we propose to prohibit the stowage of lithium batteries in an inaccessible manner unless the inaccessible cargo compartment or freight container is equipped with an FAA approved fire suppression system or the lithium batteries are packaged in an FAA approved fire resistant container. We believe the enhanced packaging and hazard communication combined with loading and stowage limitations will reduce the likelihood of a fire and will mitigate the consequences of such a fire should one occur. We are also considering whether imposing a limit on the number of lithium battery packages transported in a single aircraft, single compartment, unit load device, pallet, or similar overpack would further enhance safety. We invite commenters to address such a limitation, including potential safety benefits, possible cost impacts and operational implications or alternative suggestions for reducing risk. We invite commenters to address methods available to quantify lithium battery risks, and potential risk mitigation techniques and alternatives—either in lieu of, or in addition to, the provisions proposed in this NPRM. Based on the merits of these comments we may consider adoption of additional stowage requirements in the final rule.

H. Consolidation of Lithium Battery Regulations

At present, requirements on transporting lithium cells and batteries are located in several different special provisions in § 172.102 and in § 173.185. We believe that consolidating in a single section the requirements that apply to these articles, in a manner similar to most other hazardous materials, will promote greater understanding and compliance with the regulations and reduce the potential for undeclared or frustrated shipments.

In this NPRM, PHMSA proposes to consolidate the regulations pertaining to the packaging of lithium batteries primarily by relocating relevant provisions currently contained in special provisions to § 173.185. Additionally, aircraft quantity limitations currently located in § 172.102, Special provisions A100, A101 and A103 will be incorporated into the § 172.101 hazardous materials table (HMT). Consequently, Column 9A of the HMT (passenger aircraft/passenger rail quantity limits) for the entry "Lithium metal batteries, UN3090" will be revised to read "Forbidden" and packages containing lithium metal batteries would be required to display the cargo aircraft only label. We would remove the current requirement found in Special provision 188 to mark packages as forbidden aboard passenger aircraft. However, general requirements applicable to all hazardous materials, such as hazard communication, training, and emergency response information would not be repeated in

§ 173.185 (except to the extent that any exceptions from these requirements apply).

The United Parcel Service (UPS) filed a petition for rulemaking on May 11, 2009 (P–1541), requesting an amendment to the HMR specific to the marking of packages containing lithium batteries shipped under the exceptions found in § 172.102(c) Special Provision 189. In its petition, UPS states the markings required by Special provisions 188 and 189 are too similar and can be easily confused. The UPS petition asked PHMSA to develop a pictorial marking that would unambiguously communicate the prohibition of loading packages meeting the exceptions of Special provision 189 aboard aircraft and vessel.

We agree the markings required by Special provisions 188 and 189 are similar and can be confused. As previously described, all packages of small lithium metal batteries (UN3090) would be required to display a Class 9 label and the cargo aircraft only label. We believe the addition of the new proper shipping names specific to lithium ion cells and batteries and the elimination of the exception currently found in § 172.102(c), Special provision 188 effectively eliminates the confusion expressed by the petitioner.

We are aware of situations in which damaged or recalled batteries are required to be returned to the manufacturer. Product recalls or returns may occur for a variety of reasons including a consumer product recall in cooperation with the CPSC, a defective product that failed during field tests or a battery or device involved in an incident. In this NPRM we are proposing requirements for transporting such articles based on requirements developed for competent authority approvals and previously developed guidance. We propose to limit transport of damaged or defective batteries to highway and rail transport only. Where rail or highway transport is impracticable, we will work with FAA to develop air shipping protocols under Competent Authority Approvals on a case-by-case basis.

I. Ongoing Safety Initiatives

This NPRM represents another step in our continuing efforts to increase the safety controls applicable to the transportation of lithium batteries. This NPRM is part of a larger effort to comprehensively address the risks posed by the transportation of lithium batteries primarily those lithium batteries shipped as cargo. This NPRM does not impact lithium batteries carried by a passenger or crewmember in checked or carry-on baggage. PHMSA has taken steps to address this safety issue through several initiatives, including a battery safety public awareness campaign targeting airline passengers and infrequent battery shippers, focused enforcement with the goal of maximum compliance, and research into appropriate fire detection and suppression and containment methods.

Since 2007, PHMSA has been working with air carriers, battery manufacturers, air travel associations, airline pilot and flight crew associations and other government agencies, including the Transportation Security Administration, to educate the public about potential safety problems and measures that will reduce or eliminate those problems. PHMSA agrees that these efforts must be highly visible and continuous to be effective. One of the most visible programs to promote battery safety is the SafeTravel Web site, which includes guidance and information on how to travel safely with batteries and battery-powered devices. We have also been working with the major airlines, travel and battery industries to provide SafeTravel information for ticketed passengers and frequent flyers, and place printed battery safety materials in seat pockets on passenger planes. We have recorded several million hits on our SafeTravel Web site. PHMSA continues to maintain and update the SafeTravel Web site as new information becomes available and is currently in the process of a major revision to the site. TSA includes SafeTravel information and links on its popular public Web site and FAA has issued Travel Tips and FAQs on Batteries Carried by Airline Passengers with a link to the SafeTravel Web site. This material illustrates appropriate means for airline passengers to safely handle and protect their portable electronic devices and spare batteries. The goal is to educate the flying public to play a part in ensuring air transportation safety. Application of the measures set forth in this guidance would likely have prevented at least some of the incidents involving lithium batteries in a passenger's checked or carry-on baggage.

PHMSA continues to pursue other initiatives targeting infrequent shippers of lithium batteries. In March, 2009, PHMSA published a guidance booklet called "Shipping Batteries by Air: What You Need to Know." This booklet describes the requirements applicable to the air shipment of all battery types including lithium batteries in easy to understand terms and is intended to assist infrequent shippers. PHMSA and FAA continue to collect battery incident data to enhance our understanding of the causes of lithium battery failures and have conducted several effective investigations of battery shippers. PHMSA seeks comments on the impact of the proposals in this NPRM on infrequent shippers, and seeks data on the number of shipments, types of shipments, costs incurred by these shippers. PHMSA also seeks comments on how communication of the requirements for travelers and infrequent shippers could be improved.

J. Compliance Date

PHMSA and FAA believe that, if adopted, the provisions of this NPRM will significantly enhance the safe transportation of lithium batteries by aircraft. Therefore, we are considering requiring compliance with the provisions of the final rule no later than 75 days after its publication in the **Federal Register**. We are seeking comments as to the feasibility and practicability of such a compliance schedule. We invite commenters to provide data and information concerning the additional costs that would result from such a compliance schedule, practical difficulties associated with quickly coming into compliance with the provisions of a final rule, and any other issues that we should consider in making a decision on the compliance schedule. We also invite commenters to address the feasibility and practicability of a phased compliance schedule under which certain provisions of the final rule would become effective on a faster schedule than other provisions for which immediate compliance would be more difficult.

III. Regulatory Analyses and Notices

A. Statutory/Legal Authority for This Rulemaking

This proposed rule is published under the following statutory authorities:

1. 49 U.S.C. 5103(b) authorizes the Secretary of Transportation to prescribe regulations for the safe transportation, including security, of hazardous material in intrastate, interstate, and foreign commerce.

2. 49 U.S.C. 44701 authorizes the Administrator of the Federal Aviation Administration to promote safe flight of civil aircraft in air commerce by prescribing regulations and minimum standards for practices, methods, and procedures the Administrator finds necessary for safety in air commerce and national security. Under 49 U.S.C. 40113, the Secretary of Transportation has the same authority to regulate the

transportation of hazardous materials by air, in carrying out § 44701, that he has under 49 U.S.C. 5103.

B. Executive Order 12866 and DOT Regulatory Policies and Procedures

This proposed rule is a significant regulatory action under section 3(f) of Executive Order 12866 and, therefore, was formally reviewed by the Office of Management and Budget. This proposed rule also is a significant rule under the Regulatory Policies and Procedures of the Department of Transportation (44 FR 11034). The following sections address the costs and benefits of the measures adopted in this proposed rule.

In developing this NPRM, PHMSA considered several regulatory alternatives including (1) a do nothing approach, (2) imposing Class 9 requirements on all lithium battery shipments, (3) adopting the latest requirements of the ICAO Technical Instructions for all lithium battery shipments and (4) adopting certain provisions of options (2) and (3). In this NPRM we adopted alternative (4). This alternative combines many of the safety elements described in Alternative 2 while harmonizing with international regulatory standards to create a more complete regulatory solution. Under the proposed regulations, we will minimize the regulatory exceptions for lithium batteries transported by aircraft. Specifically, certain extremely small lithium batteries packed with or contained in equipment that do not pose an unreasonable risk in transport would not be subject to the HMR, and we would maintain an exception for specifically packaged lithium batteries transported by highway and rail only. All other lithium cells and batteries must be transported as fully regulated Class 9 material, and will be required to be packaged in combination packages. Each inner packaging must be packed into an outer package meeting the Packing Group II performance standard. This is expected to result in new costs associated with packaging, hazard communication, cargo stowage and training requirements. We expect two primary industry groups will be most directly affected by the proposals in this NPRM: (1) Manufacturers and distributors of all types of lithium batteries (including electronic device manufacturers); and (2) passenger and cargo air carriers. The costs of implementing the new rules come to approximately $9.3 million for the first year; using a constant 7% discount, the 10-year projected costs for the proposed rule come to $70.2 million. PHMSA invites commenters to address the assumptions in the regulatory evaluation, and to provide supporting data related to battery shipments which would be covered by this proposal. Specifically, data on the size distribution, value distribution, end usage, and number of batteries by type of shipment and mode of transportation—as well as any other data that would assist in validating impact estimates for this proposal, including quantification of costs and how these costs would be distributed across the lithium battery supply chain. PHMSA also invites comments on the diversion of shipments from air to other modes of transportation (due to the proposed elimination of regulatory exceptions), including the impacts this diversion will have on cost and length of shipments, and the nature of these shipments that would be impacted. In addition to data related to quantification of costs, PHMSA invites comments and data related to the quantification of risk, and risk-reduction benefits.

The regulatory evaluation does not include costs associated with handling charges that are sometimes imposed by air carriers on hazardous materials shipments. PHMSA believes the net cost of the handling fee is zero; cash is transferred from one affected industry group—shippers—to another industry group—carriers. The shipper incurs the surcharge to compensate the carrier for the enhanced service involved with transporting a hazardous materials package. Moreover, the dynamics of this market make it difficult to conclude that *shipping* costs will rise, fall, or remain relatively steady. Some high volume shippers may negotiate a reduced surcharge with air carriers. Some shippers may decide to switch to another mode. Rail and highway transport is less expensive than air transport, although both require more time in transit. If a shipper chose a different transport mode, the net effect would be that the shipper or consignee would be required to maintain an increase in inventory (and related costs) to replace the product in transit, offsetting to some extent the savings realized by using the less expensive mode. In this NPRM PHMSA specifically invites commenters to address the economic impact of surcharges and other fees associated with the handling of hazardous materials including how the fees are determined.

The principal anticipated benefits associated with this proposed rule are a reduction in the risk of an aircraft cargo compartment fire that involves lithium batteries becoming a catastrophic fire that can threaten the entire aircraft. While the risk of this type of incident is small, PHMSA has determined that, if adopted, the proposals in this NRPM will generate benefits for system users by reducing that risk. Our data shows an average of about three lithium battery incidents aboard aircraft per year. The total costs of an incident can vary greatly, from under $500 for a minor incident to hundreds of millions of dollars should an incident result in the loss of an aircraft and cargo. To calculate benefits we assumed that under the current regulations and battery-market growth trends, we will observe approximately three incidents per year and assume the average loss of $4.4 million per incident. We anticipate benefits to be approximately $13.2 million per year. Starting with 2008, the annual cost of $9.3 million and benefit of $13.2 million have been discounted at a 7% annual rate to project a total cost of $70.2 million and total benefit of $99.2 million, for an overall benefit-cost ratio of 1.41, clearly demonstrating the utility of the proposed regulation. A regulatory evaluation is available for review in the public docket for this rulemaking.

C. Executive Order 13132

This proposed rule has been analyzed in accordance with the principles and criteria contained in Executive Order 13132 ("Federalism"). This proposed rule preempts State, local and Indian tribe requirements but does not impose any regulation that has substantial direct effects on the States, the relationship between the national government and the States, or the distribution of power and responsibilities among the various levels of government. Therefore, the consultation and funding requirements of Executive Order 13132 do not apply.

The Federal hazardous material transportation law, 49 U.S.C. 5101–5128, contains an express preemption provision (49 U.S.C. 5125(b)) that preempts State, local and Indian tribe requirements on the following subjects:

(1) The designation, description, and classification of hazardous material;

(2) The packing, repacking, handling, labeling, marking, and placarding of hazardous material;

(3) The preparation, execution, and use of shipping documents related to hazardous material and requirements related to the number, contents, and placement of those documents;

(4) The written notification, recording, and reporting of the unintentional release in transportation of hazardous material; and

(5) The design, manufacture, fabrication, inspection, marking, maintenance, recondition, repair, or

testing of a packaging or container represented, marked, certified, or sold as qualified for use in transporting hazardous material in commerce.

This proposed rule addresses subject items (1), (2), (3), and (5) above and preempts State, local, and Indian tribe requirements not meeting the "substantively the same" standard.

D. Executive Order 13175

This proposed rule was analyzed in accordance with the principles and criteria contained in Executive Order 13175 ("Consultation and Coordination with Indian Tribal Governments"). Because this proposed rule does not have tribal implications and does not impose substantial direct compliance costs, the funding and consultation requirements of Executive Order 13175 do not apply.

E. Regulatory Flexibility Act, Executive Order 13272, and DOT Procedures and Policies

The Regulatory Flexibility Act (5 U.S.C. 601 *et seq.*) requires an agency to review regulations to assess their impact on small entities, unless the agency determines that a rule is not expected to have a significant impact on a substantial number of small entities. This NPRM proposes measures to enhance the safety in transportation of lithium batteries by ensuring that all lithium batteries are designed to withstand normal transportation conditions, packaged to reduce the possibility of damage that could lead to an incident, minimize the consequences of an incident and ensure packages of lithium batteries are accompanied by hazard information that ensures appropriate and careful handling by air carrier personnel and informs transport workers and emergency response personnel of actions to be taken in the event of an emergency.

Two types of businesses are likely to incur costs associated with compliance with the provisions of this NPRM—manufacturers and distributors of lithium batteries and manufacturers of equipment using lithium batteries. Unless alternative definitions have been established by the agency in consultation with the Small Business Administration (SBA), the definition of "small business" has the same meaning as under the Small Business Act. Since no such special definition has been established, we employ the thresholds published by SBA for industries subject to the HMR. For this analysis, we identified 60 small businesses that manufacture and/or distribute lithium metal or lithium-ion batteries or cells and are potentially affected by the NPRM. Additionally, we identified 2,179 businesses that manufacture or distribute electronics shipped with lithium metal or lithium-ion batteries.

The compliance costs to small businesses subject to the provisions in the NPRM are costs primarily related to packaging for lithium battery shipments. As detailed in the regulatory evaluation, incremental costs are expected to range from $0.02 to $0.09 per cell for those shipments that are currently excepted from specification packaging requirements. We estimate that small businesses will make 69,876 shipments per year for which more robust packaging will be required; each shipment will average about 200 cells. Using the mid-range incremental packaging cost estimate of $0.04 per cell, a small business will incur an incremental cost of about $8 per shipment. The total incremental packaging cost is $559,008 per year or about $250 per small entity per year.

Small entities will also incur increased costs related to training. These costs are estimated to total $98 per small entity per year.

We have prepared and placed in the docket a regulatory impact analysis (RIA) addressing the economic impact of this rule. The RIA includes qualitative discussions and quantitative measurements of costs related to implementation of this rule.

Based on this analysis, I certify that the provisions of this NPRM, if adopted, would not have a significant impact on a substantial number of small entities.

F. Paperwork Reduction Act

PHMSA currently has an approved information collection under Office of Management and Budget (OMB) Control Number 2137–0034, "Hazardous Materials Shipping Papers and Emergency Response Information" with an expiration date of May 31, 2011. PHMSA believes this proposed rule will result in an increase in the annual burden of this information collection.

Under the Paperwork Reduction Act of 1995, no person is required to respond to a collection of information unless it is approved by OMB and displays a valid OMB control number. Section 1320.8(d), Title 5, Code of Federal Regulations requires that PHMSA provide interested members of the public and affected agencies an opportunity to comment on information collection and recordkeeping requests.

This notice identifies a revised information collection request that PHMSA will submit to OMB for approval based on the requirements in this proposed rule. PHMSA has developed burden estimates to reflect changes in this proposed rule, and estimates the additional information collection and recordkeeping burden as proposed in this rule to be as follows:

OMB Control No. 2137–0034:

Additional Annual Number of Respondents	5,131
Additional Annual Number of Responses	167,800
Additional Annual Burden Hours	1,939
Additional Annual Burden Costs	$48,480

PHMSA specifically requests comments on the information collection and recordkeeping burdens associated with developing, implementing, and maintaining these requirements for approval under this proposed rule.

Requests for a copy of this information collection should be directed to: Deborah Boothe or T. Glenn Foster, Office of Hazardous Materials Standards (PHH–10), Pipeline and Hazardous Materials Safety Administration, Room E24–426, 1200 New Jersey Ave., SE., Washington, DC 20590–0001, telephone (202) 366–8553.

G. Regulation Identifier Number (RIN)

A regulation identifier number (RIN) is assigned to each regulatory action listed in the Unified Agenda of Federal Regulations. The Regulatory Information Service Center publishes the Unified Agenda in April and October of each year. The RIN contained in the heading of this document can be used to cross-reference this action with the Unified Agenda.

H. Unfunded Mandates Reform Act

This proposed rule does not impose unfunded mandates under the Unfunded Mandates Reform Act of 1995. It does not result in costs of $141,300,000 or more, adjusted for inflation, to either State, local or tribal governments, in the aggregate, or to the private sector in any one year, and is the least burdensome alternative that achieves the objective of the rule.

I. Environmental Assessment

The National Environmental Policy Act (NEPA), §§ 4321–4375, requires Federal agencies to analyze proposed actions to determine whether the action will have a significant impact on the human environment. The Council on Environmental Quality (CEQ) regulations order Federal agencies to conduct an environmental review considering (1) the need for the proposed action, (2) alternatives to the proposed action, (3) probable environmental impacts of the proposed action and alternatives, and (4) the agencies and persons consulted during

the consideration process. 40 CFR § 1508.9(b).

Purpose and Need. As discussed elsewhere in this preamble, lithium batteries are potentially hazardous in transportation because they present both chemical (*e.g.,* flammable electrolytes) and electrical hazards. If not safely packaged and handled when transported, lithium batteries can become dangerous. Defective batteries or batteries which are misused, mishandled, or improperly packaged, improperly stored, or overcharged can overheat and ignite and, once ignited, fires can be especially difficult to extinguish. This NPRM proposes measures to enhance the safety in transportation of lithium batteries by ensuring that all lithium batteries are designed to withstand normal transportation conditions, packaged to reduce the possibility of damage that could lead to an incident, minimize the consequences of an incident and ensure packages of lithium batteries are accompanied by hazard information that ensures appropriate and careful handling by air carrier personnel and informs transport workers and emergency response personnel of actions to be taken in an emergency.

Alternatives. PHMSA considered the following alternatives:

Alternative 1: Do Nothing

Under this alternative, the current regulatory scheme applicable to lithium batteries would continue in place. We rejected this alternative because newly identified safety risks would not be addressed.

Alternative 2: Impose Class 9 Requirements on All Lithium Battery Shipments

Under this alternative, we would eliminate the current regulatory exceptions for small lithium batteries and require their shipment as fully regulated Class 9 materials. The current packaging requirement for these excepted batteries (a package meeting the general packaging requirements of Subpart B of Part 173 and capable of withstanding 1.2 meter drop test in any orientation) would be replaced by a requirement to package the batteries in UN specification packaging conforming to the Packing Group II performance level. The current marking applicable to packages containing these excepted batteries would be replaced with a CLASS 9 label and proper shipping name, UN ID number mark, and the CARGO AIRCRAFT ONLY label, as appropriate.

In addition, each shipment would be accompanied by shipping papers and emergency response information, documentation that is currently not required for excepted battery shipments. In addition, eliminating the regulatory exceptions would require notification to the pilot in command of the presence of lithium batteries, the number of packages, and their stowage location. Under this alternative, the ban on the transport of lithium metal batteries aboard passenger aircraft would continue. The maximum quantities that may be offered for transportation in one package aboard passenger and cargo only aircraft would remain unchanged at 5 kg and 35 kg respectively.

We rejected Alternative 2. While it would address many of the safety issues associated with the transportation of lithium batteries, Alternative 2 does not represent a comprehensive regulatory solution. Moreover, Alternative 2 does not address critical international harmonization issues.

Alternative 3: Impose ICAO Requirements on All Lithium Battery Shipments

Under this alternative, PHMSA would amend the HMR to harmonize transportation requirements for lithium batteries with requirements in the ICAO Technical Instructions, as follows: (1) The current exception for small lithium batteries would be retained; (2) for excepted shipments, the watt-hour rating for the batteries would be marked on the outside case and the package would be required to have a new lithium battery handling label in place of the current mark; (3) package weight limitations applicable to different lithium battery types would be revised; and (4) for lithium metal batteries, each package would be allowed to contain up to 2.5 kg of net lithium content per package when surrounded by cushioning material and packaged in rigid metal outer packaging.

We rejected Alternative 3. Although it harmonizes the HMR with international requirements applicable to lithium batteries, it does not address safety issues associated with small batteries nor does it limit the weight of batteries that may be carried in inaccessible compartments on cargo aircraft. Our data and research suggest that the severity of a fire involving lithium batteries is proportional to the number of batteries involved in the fire.

Alternative 4: Adopt the Provisions in Both Alternatives 2 and 3

Under this alternative, PHMSA would adopt the new and revised regulatory provisions summarized in the discussion of Alternatives 2 and 3 above. In addition, we would adopt requirements for the transport of recalled or defective batteries.

Alternative 4 is the selected alternative. This alternative combines many of the safety elements described in Alternative 2 while harmonizing with international regulatory standards to create a more complete regulatory solution. This alternative will minimize the regulatory exceptions for lithium batteries transported by aircraft. Specifically, with the exception of incident reporting requirements, certain extremely small lithium batteries packed with or contained in equipment that do not pose an unreasonable risk in transport would not be subject to the HMR, and we would maintain an exception for specifically packaged lithium batteries transported by highway and rail only. All other lithium batteries would be fully regulated Class 9 materials. These lithium batteries would be packed in UN specification packaging conforming to the Packing Group II performance level and appropriately marked and labeled consistent with Part 172. Each shipment of lithium batteries would be accompanied by shipping papers, emergency response information, and a notice to the pilot in command. Further, we would limit the manner in which lithium batteries may be stowed on cargo aircraft. Finally, under this alternative, the requirements applicable to lithium batteries would be harmonized with international standards to the extent possible consistent with our overall safety goals, thereby enhancing safety and facilitating transportation of these critical energy devices.

Analysis of Environmental Impacts. Hazardous materials are substances that may pose a threat to public safety or the environment during transportation because of their physical, chemical, or nuclear properties. The hazardous material regulatory system is a risk management system that is prevention-oriented and focused on identifying a safety hazard and reducing the probability and quantity of a hazardous material release. Hazardous materials are categorized by hazard analysis and experience into hazard classes and packing groups. The regulations require each shipper to classify a material in accordance with these hazard classes and packing groups; the process of classifying a hazardous material is itself a form of hazard analysis. Further, the regulations require the shipper to communicate the material's hazards through use of the hazard class, packing group, and proper shipping name on the shipping paper and the use of labels on packages and placards on transport

vehicles. Thus the shipping paper, labels, and placards communicate the most significant findings of the shipper's hazard analysis. A hazardous material is assigned to one of three packing groups based upon its degree of hazard—from a high hazard Packing Group I to a low hazard Packing Group III material. The quality, damage resistance, and performance standards of the packaging in each packing group are appropriate for the hazards of the material transported.

Releases of hazardous materials, whether caused by accident or deliberate sabotage, can result in explosions or fires. Radioactive, toxic, infectious, or corrosive hazardous materials can have short- or long-term exposure effects on humans or the environment. Generally, however, the hazard class definitions are focused on the potential safety hazards associated with a given material or type of material rather than the environmental hazards of such materials.

Lithium is the lightest solid metal. It can be absorbed into the body by inhalation of its aerosol and by ingestion and is corrosive to the eyes, the skin and the respiratory tract. Lithium reacts violently with strong oxidants, acids and many compounds (hydrocarbons, halogens, halons, concrete, sand and asbestos) causing fire and explosion hazard. In addition, it reacts with water, forming highly flammable hydrogen gas and corrosive fumes of lithium hydroxide. Lithium hydroxide represents a potentially significant environmental hazard, particularly to water organisms. Lithium metal batteries contain no toxic metals.

Lithium ion batteries contain an ionic form of lithium but no lithium metal. Lithium ion batteries do not pose an environmental hazard and are safe for disposal in the normal municipal waste stream. While other types of batteries include toxic metals such as cadmium, the metals in lithium ion batteries—cobalt, copper, nickel and iron—are considered safe for landfills or incinerators.

The measures proposed in this NPRM will reduce the risks to people and the environment posed during transportation of lithium metal and lithium ion batteries by ensuring that the batteries will withstand conditions normally encountered in transportation; packaged to reduce the possibility of damage that could lead to an incident and minimize the consequences of an incident; and ensure packages of lithium batteries are accompanied by hazard information that ensures appropriate and careful handling by air carrier personnel and informs transport workers and emergency response personnel of actions to be taken in an emergency.

Lithium batteries are a key part of strategies to develop greener technologies to power many different applications from automobiles to cell phones and computers. The measures proposed in this NPRM will facilitate the safe transportation of lithium metal and lithium ion batteries across national boundaries, thereby supporting more widespread use of these batteries as alternatives to other types of energy sources that have adverse environmental impacts. We have preliminarily concluded that there are no significant environmental impacts associated with proposed amendments in this final rule.

Consultation and Public Comment. We invite commenters to address the potential environmental impacts of the proposals in this NRPM.

J. Privacy Act

Anyone is able to search the electronic form of any written communications and comments received into any of our dockets by the name of the individual submitting the document (or signing the document, if submitted on behalf of an association, business, labor union, etc.). You may review DOT's complete Privacy Act Statement in the **Federal Register** published on April 11, 2000 (Volume 65, Number 70; Pages 19477–78) or you may visit *http://www.regulations.gov/search/footer/privacyanduse.jsp.*

K. International Trade Analysis

The Trade Agreements Act of 1979 (Pub. L. 96–39), as amended by the Uruguay Round Agreements Act (Pub. L. 103–465), prohibits Federal agencies from establishing any standards or engaging in related activities that create unnecessary obstacles to the foreign commerce of the United States. For purposes of these requirements, Federal agencies may participate in the establishment of international standards, so long as the standards have a legitimate domestic objective, such as providing for safety, and do not operate to exclude imports that meet this objective. The statute also requires consideration of international standards and, where appropriate, that they be the basis for U.S. standards. PHMSA participates in the establishment of international standards to protect the safety of the American public, and we have assessed the effects of the proposed rule to ensure that it does not exclude imports that meet this objective. Accordingly, this rulemaking is consistent with PHMSA's obligations under the Trade Agreement Act, as amended.

List of Subjects

49 CFR Part 171

Exports, Hazardous materials transportation, Hazardous waste, Imports, Incorporation by reference, Reporting and recordkeeping requirements.

49 CFR Part 172

Education, Hazardous materials transportation, Hazardous waste, Incorporation by reference, Labeling, Markings, Packaging and containers, Reporting and recordkeeping requirements.

49 CFR Part 173

Hazardous materials transportation, Packaging and containers, Radioactive materials, Reporting and recordkeeping requirements, Uranium.

49 CFR Part 175

Air carriers, Hazardous materials transportation, Radioactive materials, Reporting and recordkeeping requirements.

In consideration of the foregoing, we propose to amend 49 CFR Chapter I as follows:

PART 171—GENERAL INFORMATION, REGULATIONS, AND DEFINITIONS

1. The authority citation for part 171 continues to read as follows:

Authority: 49 U.S.C. 5101–5128, 44701; 49 CFR 1.45 and 1.53; Pub. L. 101–410 section 4 (28 U.S.C. 2641 note); Pub. L. 104–134, section 31001.

2. In § 171.7, in the paragraph (a)(3) table, the entry "UN Recommendations on the Transport of Dangerous Goods, Manual of Tests and Criteria, Fourth revised edition, (2003), and Addendum 2, (2004)" is revised to read as follows:

§ 171.7 Reference material.

(a) * * *

(3) *Table of material incorporated by reference.* * * *

Source and name of material	49 CFR reference
* * * * * * *	
UN Recommendations on the Transport of Dangerous Goods Manual of Tests and Criteria, Fifth revised edition (2009).	172.102; 173.21; 173.56; 173.57; 173.58; 173.115; 173.124; 173.125; 173.127; 173.128; 173.137; 173.185; Part 173, appendix H; 178.274.
* * * * * * *	

3. In § 171.8:

1. The definition for "Equivalent lithium content" is removed.

2. The definitions for "Lithium cell or battery", "Lithium ion cell or battery", "Lithium metal cell or battery", "Short circuit" and "Watt-hour" are added in appropriate alphabetical order.

3. The definitions for "Aggregate lithium content" and "Lithium content" are revised.

The additions and revisions, in appropriate alphabetic order, read as follows:

§ 171.8 Definitions and abbreviations.

* * * * *

Aggregate lithium content means the sum of the grams of lithium content contained by the cells comprising a battery.

* * * * *

Lithium cell or battery refers to a family of cells and batteries with different chemistries comprising many types of cathodes and electrolytes. A lithium cell is a single encased exhibits a voltage differential across its two terminals. A lithium battery consists of multiple lithium cells electrically connected together fitted with devices necessary for use, for example, case, terminals, markings and protective devices. For the purposes of this subchapter, units that are commonly referred to as "battery packs" or "battery modules" or "battery assemblies" having the primary function of providing a source of power to another piece of equipment are treated as batteries.

Lithium content means

(1) For a lithium metal or lithium alloy cell the mass in grams of lithium or lithium alloy in the anode, and

(2) For a lithium metal or lithium alloy battery, the sum of the grams of lithium content contained in the component cells of the battery.

(3) For a lithium ion cell or battery, see the definition for "Watt-hour".

Lithium-ion cell or battery means a rechargeable electrochemical cell or battery in which the positive and negative electrodes are both lithium compounds constructed with no metallic lithium in either electrode. A lithium ion polymer cell or battery that uses lithium-ion chemistries, as described herein, is regulated as a lithium-ion cell or battery.

Lithium metal cell or battery means an electrochemical cell or battery utilizing lithium metal or lithium alloys as the anode.

* * * * *

Short circuit means a direct connection between positive and negative terminals of a cell or battery that provides a virtual zero resistance path for current flow.

* * * * *

Watt-hour means a unit of energy equivalent to one watt (1 W) of work acting for one hour (1 h) of time and is expressed as (Wh). The Watt-hour rating of a lithium ion cell or battery is determined by multiplying a cell or battery's rated capacity in ampere-hours, by its nominal voltage. Therefore, Watt-hour (Wh) = ampere-hour (Ah) × volts (V).

* * * * *

4. In § 171.12, paragraphs (a)(6) is revised to read as follows:

§ 171.12 North American shipments.

(a) * * *

(6) *Lithium cells and batteries.* Lithium cells and batteries must be offered for transport and transported in accordance with the provisions of this subchapter. Lithium metal cells and batteries (UN3090) are forbidden for transport aboard passenger-carrying aircraft.

(i) The provisions of this paragraph (a)(6) do not apply to packages that contain 5 kg (11 pounds) net weight or less lithium metal cells or batteries that are contained in or packed with equipment (UN3091).

(ii) Lithium cells and batteries with a lithium content of not more than 0.3 grams or a watt-hour rating of not more than 3.7 Wh packed with or contained in equipment are not subject to any other requirements of this subchapter except for the requirements in §§ 171.15 and 171.16 applicable to the reporting of incidents.

* * * * *

5. Section 171.21(a) is revised to read as follows:

§ 171.21 Assistance in investigations and special studies.

(a) A person reporting an incident under the provisions of § 171.15 or § 171.16 must:

(1) Give an authorized representative of the Federal, State or local government agency reasonable assistance in the investigation of the incident; (*i.e.* making all records and information pertaining to the incident available or assisting in the transportation of the evidence upon request).

(2) Give an authorized representative or special agent of the Department of Transportation reasonable assistance in the investigation of the incident; and

(3) Upon request, provide an authorized representative or special agent of the Department of Transportation reasonable access to the damaged package or article, if available.

* * * * *

6. In § 171.24, paragraphs (d)(1)(ii) and (d)(1)(iii) are revised to read as follows:

§ 171.24 Additional requirements for the use of the ICAO Technical Instructions.

* * * * *

(d) * * *

(1) * * *

(ii) *Lithium cells and batteries.* The following conditions and limitations apply to lithium batteries and cells:

(A) Lithium cells and batteries meeting the provisions found in Section II of Packing Instructions 965 through 970 must be offered for transportation and transported in accordance with the provisions of this subchapter;

(B) Lithium metal cells and batteries (UN3090) are forbidden for transport aboard passenger-carrying aircraft.

(*1*) The provisions of this paragraph do not apply to packages that contain 5 kg (11 pounds) net weight or less lithium metal cells or batteries that are contained in or packed with equipment (UN3091); and

(*2*) Lithium cells and batteries of a design type proven to meet the criteria of Class 9 in Subsection 38.3 of the UN Manual of Tests and Criteria with a lithium content of not more than 0.3 grams or a watt-hour rating of not more than 3.7 Wh packed with or contained in equipment are not subject to any other requirements of this subchapter

except for the requirements in §§ 171.15 and 171.16 applicable to the reporting of incidents.

(iii) *Pre-production prototype lithium cells and batteries.* Pre-production cells and batteries must be approved by the Associate Administrator prior to transportation aboard cargo aircraft.

* * * * *

7. In § 171.25, paragraph (b)(3) is revised to read as follows:

§ 171.25 Additional requirements for the use of the IMDG Code.

* * * * *

(b) * * *

(3) Lithium cells and batteries—

(i) Transported in accordance with Special Provision 188 of the IMDG Code may be offered for transportation and transported by highway, rail or vessel only. Additionally, each package must be marked "LITHIUM BATTERIES—FORBIDDEN FOR TRANSPORT ABOARD AIRCRAFT" on a background of contrasting color. The marking must be durable, legible and of such a size relative to the package as to be readily visible.

(ii) Lithium cells and batteries of a design type proven to meet the criteria of Class 9 in Subsection 38.3 of the UN Manual of Tests and Criteria with a lithium content of not more than 0.3 grams or a watt-hour rating of not more than 3.7 Wh packed with or contained in equipment are not subject to any other requirements of the subchapter except for the requirements in §§ 171.15 and 171.16 applicable to the reporting of incidents.

* * * * *

PART 172—HAZARDOUS MATERIALS TABLE, SPECIAL PROVISIONS, HAZARDOUS MATERIALS COMMUNICATIONS, EMERGENCY RESPONSE INFORMATION, AND TRAINING REQUIREMENTS

8. The authority citation for part 172 continues to read as follows:

Authority: 49 U.S.C. 5101–5128, 44701; 49 CFR 1.45 and 1.53.

9. In § 172.101, the Hazardous Materials Table is amended by removing and adding entries in the appropriate alphabetical sequence, to read as follows:

BILLING CODE 4910–60–P

Symbols (1)	Hazardous materials descriptions and proper shipping names (2)	Hazard class or division (3)	Identification numbers (4)	PG (5)	Label codes (6)	Special provisions (7)	(8) Packaging (§ 173.***) Exceptions (8A)	Non-bulk (8B)	Bulk (8C)	(9) Quantity limitations (see §§ 173.27 and 175.75) Passenger aircraft/rail (9A)	Cargo aircraft only (9B)	(10) Vessel stowage Location (10A)	Other (10B)
	[REMOVE] *		*		*		*		*		*		*
	Lithium batteries, contained in equipment	9	UN3091	II	9	29, 188, 189, 190, A54, A55, A101, A104	185	185	None	See A101, A104	35 kg	A	
	Lithium batteries packed with equipment	9	UN3091	II	9	29, 188, 189, 190, A54, A55, A101, A103	185	185	None	See A101, A103	35 kg gross	A	
	Lithium battery	9	UN3090	II	9	29, 188, 189,190, A54, A55, A100	185	185	None	See A100	35 kg gross	A	
	*		*		*		*		*		*		*
	[ADD] *		*		*		*		*		*		*
	Lithium ion batteries contained in equipment including lithium ion polymer batteries	9	UN3481	II	9		185	185	None	5 kg	35 kg	A	
	Lithium ion batteries including lithium ion polymer batteries	9	UN3480	II	9		185	185	None	5 kg gross	35 kg gross	A	

	Lithium ion batteries packed with equipment including lithium ion polymer batteries	9	UN3481	II	9		185	185	None	5 kg	35 kg	A
	Lithium metal batteries contained in equipment including lithium alloy batteries	9	UN3091	II	9		185	185	None	5 kg	35 kg	A
	Lithium metal batteries including lithium alloy batteries	9	UN3090	II	9		185	185	None	Forbidden	35 kg gross	A
	Lithium metal batteries packed with equipment including lithium alloy batteries	9	UN3091	II	9		185	185	None	5 kg	35 kg	A
	*		*		*		*		*		*	

BILLING CODE 4910–60–C

§ 172.102 Special Provisions

10. In § 172.102, in paragraph (c)(1), Special Provisions 134 and 157 are revised; Special Provisions 29, 188, 189, and 190 are removed; and in paragraph (c)(2), Special Provisions A54, A55, A100, A101, A103, and A104 are removed.

The revisions read as follows:

§ 172.102 Special provisions.

* * * * *

(c) * * *

(1) * * *

Code/Special Provisions

* * * * *

134 This entry only applies to vehicles, machinery and equipment

powered by wet batteries, sodium batteries, or lithium batteries that are transported with these batteries installed. Examples of such items are electrically-powered cars, lawn mowers, wheelchairs, and other mobility aids. Self-propelled vehicles that also contain an internal combustion engine must be consigned under the entry "Vehicle, flammable gas powered" or "Vehicle, flammable liquid powered", as appropriate.

* * * * *

157 This entry includes hybrid electric vehicles powered by both an internal combustion engine and wet, sodium or lithium batteries installed. Vehicles containing an internal combustion engine must be consigned under the entry "Vehicle, flammable gas powered" or "Vehicle, flammable liquid powered", as appropriate.

* * * * *

PART 173—SHIPPERS—GENERAL REQUIREMENTS FOR SHIPMENTS AND PACKAGINGS

11. The authority citation for part 173 continues to read as follows:

Authority: 49 U.S.C. 5101–5128, 44701; 49 CFR 1.45 and 1.53.

12. Section 173.185 is revised to read as follows:

§ 173.185 Lithium cells and batteries.

Lithium cell and battery. A lithium cell or battery must be transported only under the following conditions:

(a) *General Requirements.* (1) Each lithium cell or battery must:

(i) Be of a design type proven to meet the criteria of Class 9 in Sub-section 38.3 of the UN Manual of Tests and Criteria (IBR; see § 171.7 of this subchapter).

(A) A lithium cell or battery that differs from a tested design type would be considered a new design type and would be required to be retested:

(*1*) A change of 0.1 grams or 5% by mass to the cathode, to the anode, or to the electrolyte; or for rechargeable batteries a change in the nominal energy in watt-hours or an increase in the nominal voltage of more than 5%; or

(*2*) A change that would materially affect the test results would be considered a new design type;

Note to paragraph (a)(1)(i)(A): The type of change that might be considered to differ from a tested type, such that it might lead to failure of any of the tests, may include but is not limited to:

—A change in the material of the anode, the cathode, the separator, or the electrolyte;
—A change of protective devices, including hardware and software;
—A change of safety design in cells or batteries, such as a venting valve;
—A change in the number of component cells;
—A change in connecting mode of component cells.

(B) Each person who manufactures lithium cells or batteries must maintain a record of satisfactory completion of these tests prior to offering the cell or battery for transport and must make this record available, upon request, to an authorized official of a Federal, State, or local government agency at reasonable times and locations. Each person who manufactures lithium cells or batteries must retain this record for as long as that lithium battery design type is offered for transportation and for one year thereafter.

(ii) Incorporate a safety venting device or otherwise be designed in a manner that will preclude a violent rupture under conditions normally incident to transportation.

(iii) Be equipped with an effective means to prevent dangerous reverse current flow (*e.g.,* diodes, fuses, etc.) if a battery contains cells or a series of cells that are connected in parallel; and

(iv) Be equipped with an effective means of preventing external short circuits and the evolution of a dangerous amount of heat (*i.e.* an amount of heat sufficient to be dangerous to packaging or personal safety to include charring, melting or scorching of packaging, or other evidence).

(2) *Packaging.* Lithium cells and batteries must be packaged as follows:

(i) Lithium cells or batteries, including lithium cells or batteries packed with or contained in equipment, must be packaged in a manner to prevent short-circuiting, generation of sparks, or a dangerous quantity of heat. Examples of acceptable packaging methods include but are not limited to the following: Packaging each battery or each battery powered device in fully enclosed inner packagings made of non-conductive material; separating batteries and battery powered devices in a manner to prevent contact with other batteries, devices, or conductive materials (*e.g.,* metal) in the packagings; ensuring exposed terminals are protected with non-conductive caps, non-conductive tape; or other appropriate means; and

(ii) Lithium cells or batteries must be packaged in combination packagings conforming to the requirements of part 178, subparts L and M, of this subchapter at the Packing Group II performance level. The lithium cell or battery must be packed in inner packagings that completely enclose the cell or battery. The inner packagings must be packed within one of the following outer packagings: Metal boxes (4A or 4B); wooden boxes (4C1, 4C2, 4D, or 4F); fiberboard boxes (4G); solid plastic boxes (4H2); fiber drums (1G); metal drums (1A2 or 1B2); plywood drums (1D); plastic jerricans (3H2); or metal jerricans (3A2 or 3B2).

(3) Except as provided in paragraph (e) of this section, cells and batteries with a liquid cathode containing sulfur dioxide, sulfuryl chloride or thionyl chloride may not be offered for transportation or transported if any cell has been discharged to the extent that the open circuit voltage is less than two volts or is less than ⅔ of the voltage of the fully charged cell, whichever is less.

(4) Cells and batteries with lithium content of not more than 0.3 grams or a watt-hour rating of not more than 3.7 Wh that meet the requirements of paragraph (a) that are packed with or contained in equipment in accordance with paragraphs (b) or (c) of this section are not subject to any other requirements of the subchapter except for the incident reporting requirements in §§ 171.15 and 171.16.

(b) *Lithium cells or batteries packed with equipment.* Lithium cells or batteries packed with equipment must meet all the requirements of paragraph (a) of this section except the specification packaging requirements of paragraph (a)(2)(ii).

(1) The cells or batteries must be packed to prevent short circuits, including shifting that could lead to short circuits. The equipment and the packages of cells or batteries must be further packed in a strong outer packaging.

(2) The package may contain no more than the number of lithium cells or batteries necessary to power the piece of equipment plus two spare cells or batteries.

(c) *Lithium cells or batteries contained in equipment.* Lithium cells or batteries contained in equipment must meet all the requirements of paragraph (a) of this section, except the specification packaging requirements of paragraph (a)(2)(ii).

(1) The equipment must be packed in a strong outer packaging that is waterproof or is made waterproof through the use of an inner packaging or a liner unless the equipment is made waterproof by nature of its construction.

(2) The package may contain no more than the number of lithium cells or batteries necessary to power the piece of equipment plus two spare cells or batteries. The additional cells or batteries must be packaged in

accordance with paragraph (b) of this section.

(3) If package contains cells or batteries in equipment and other cells or batteries packed with equipment, the package must be marked with the proper shipping name "Lithium metal batteries packed with equipment" or "Lithium ion batteries packed with equipment" as appropriate.

(d) *Exceptions for surface transport.* When transported by motor vehicle, rail car, or vessel, lithium cells or batteries, including lithium cells or batteries packed with or contained in equipment, are excepted from the subparts C, D and E of part 172 of this subchapter and the specification packaging requirements of paragraph (a)(2)(ii) of this section provided they conform to all of the following conditions:

(1) For a lithium metal cell, the lithium content is not more than 1 g per cell and the aggregate lithium content is not more than 2 g per battery and, for a lithium ion cell or battery, the watt-hour rating is not more than 20 Wh per cell and not more than 100 Wh per battery. These limits may be increased to 5 g per lithium metal cell or 25 grams per lithium metal battery and 60 Wh per lithium ion cell and 300 Wh per battery when transported by highway or rail only;

(2) Cells or batteries are separated or packaged in a manner to prevent short circuits and are packed in a strong outer packaging or are contained in equipment;

(3) Except when contained in equipment, each package containing more than 4 lithium cells or 2 lithium batteries must be capable of withstanding a 1.2 meter drop test in any orientation without damage to cells or batteries contained in the package, without shifting of the contents that would allow short circuiting and without release of package contents;

(4) Each package must be marked "LITHIUM BATTERIES—FORBIDDEN FOR TRANSPORT ABOARD AIRCRAFT" on a background of contrasting color. The marking must be durable, legible and of such a size relative to the package as to be readily visible and include any special procedures that should be followed if the package is damaged;

(5) Each shipment consisting of one or more packages must be accompanied by a document indicating that the package contains lithium batteries and any special procedures that should be followed if the package is damaged; and

(6) The net weight of lithium batteries or cells in the package may not exceed 30 kg (66 pounds).

(e) *Lithium cells and batteries, for disposal or recycling.* A lithium cell or battery offered for transportation or transported by motor vehicle to a permitted storage facility or disposal site or for purposes of recycling is excepted from the specification packaging requirements of paragraph (a)(2)(ii) of this section and the requirements of paragraphs (a)(1)(i) and (a)(3) of this section when protected against short circuits and packed in a strong outer packaging conforming to the requirements of §§ 173.24 and 173.24a.

(f) *Small production runs and pre-production prototypes.* When transported by motor vehicle or rail car, production runs of not more than 100 lithium cells or batteries per year or pre-production prototype lithium cells or batteries transported for purposes of testing are excepted from the testing requirements of paragraph (a)(1)(i) of this section provided:

(1) The cells or batteries are individually packed in an inner packaging, surrounded by cushioning material that is non-combustible and non-conductive; and

(2) The cells or batteries are packed in an outer packaging that is a metal, plastic or plywood drum (1A2, 1H2, 1D) or a metal, plastic or wooden box (4A, 4B, 4H1, 4H2, 4C1 or 4C2) that meets the criteria for Packing Group I packagings

(g) *Damaged, defective, or recalled batteries.* Lithium cells or batteries that have been damaged, identified as defective, or are otherwise being returned to the manufacturer for safety reasons must be packaged in accordance with paragraph (a)(2) of this section. Inner packagings must be surrounded by cushioning material that is non-combustible, and non-conductive. Damaged, defective, or recalled batteries packaged in this manner must be transported by highway or rail only.

(h) *Batteries exceeding 12 kg.* Batteries employing a strong, impact-resistant outer casing and exceeding a gross weight of 12 kg (26.5 lbs.), and assemblies of such batteries, may be packed in strong outer packagings, in protective enclosures (for example, in fully enclosed wooden slatted crates) or on pallets. Batteries must be secured to prevent inadvertent movement, and the terminals may not support the weight of other superimposed elements. Batteries packaged in this manner are not permitted for transportation by passenger aircraft, and may be transported by cargo aircraft only if approved by the Associate Administrator prior to transportation.

(i) *Approval.* A lithium cell or battery that does not conform to the provisions of this subchapter may be transported only under conditions approved by the Associate Administrator.

13. In § 173.219, paragraph (b)(3) is revised as follows:

§ 173.219 Life-saving appliances.

* * * * *

(b) * * *

(3) *Electric storage batteries or lithium batteries.* Life saving appliances containing lithium batteries must be transported in accordance with § 173.185.

* * * * *

14. In § 173.220, paragraphs (d) and (e) are revised as follows:

§ 173.220 Internal combustion engines, self-propelled vehicles, mechanical equipment containing internal combustion engines, and battery powered vehicles or equipment.

* * * * *

(d) *Lithium batteries.* (1) A vehicle, engine, or machinery powered by lithium metal batteries that is transported with these batteries installed may be transported on board passenger-carrying aircraft provided the lithium content of each cell, when fully charged, is not more than 5 grams, the aggregate lithium content of the anode of each battery, when fully charged, is not more than 25 grams and the net weight of lithium batteries does not exceed 5 kg (11 pounds). Lithium batteries contained in vehicles, engines, or mechanical equipment must be securely fastened in the battery holder of the vehicle, engine, or mechanical equipment and must be protected in such a manner as to prevent damage and short circuits (*e.g.,* by the use of non-conductive caps that cover the terminals entirely). Except for vehicles transported by highway for product testing with prototype lithium batteries securely installed, each lithium battery must be of a type that has successfully passed each test in the UN Manual of Tests and Criteria as specified in § 173.185, unless approved by the Associate Administrator.

(2) Equipment (other than vehicles, engines or mechanical equipment) containing lithium batteries, must be described as "Lithium metal batteries contained in equipment" or "Lithium ion batteries contained in equipment", as appropriate, and transported in accordance with § 173.185.

(e) *Other hazardous materials.* (1) Items containing hazardous materials, such as fire extinguishers, compressed gas accumulators, safety devices, and other hazardous materials, that are

integral components of the motor vehicle, engine, or mechanical equipment and are necessary for the operation of the vehicle, engine, or mechanical equipment, or for the safety of its operator or passengers must be securely installed in the motor vehicle, engine, or mechanical equipment. Such items are not otherwise subject to the requirements of this subchapter.

(2) Equipment (other than vehicles, engines or mechanical equipment) containing lithium batteries must be described as "Lithium metal batteries contained in equipment" or "Lithium ion batteries contained in equipment", as appropriate, and transported in accordance with § 173.185.

* * * * *

PART 175—CARRIAGE BY AIRCRAFT

15. The authority citation for part 175 continues to read as follows:

Authority: 49 U.S.C. 5101–5128, 44701; 49 CFR 1.45 and 1.53.

16. In § 175.8, add a new paragraph (a)(4) to read as follows:

§ 175.8 Exceptions for operator equipment and items of replacement.

(a) * * *

(4) Items containing hazardous materials used by the operator aboard the aircraft when approved by the Administrator of the Federal Aviation Administration.

* * * * *

17. In § 175.10, paragraph (a)(17) is revised to read as follows:

§ 175.10 Exceptions for passengers, crewmembers, and air operators.

(a) * * *

(17) Except as provided in § 173.21 of this subchapter, portable electronic devices (for example, watches, calculating machines, cameras, cellular phones, laptop and notebook computers, camcorders, etc.) containing dry cells or dry batteries (including lithium cells or batteries) and spare dry cells and batteries for these devices, when carried by passengers or crew members for personal use. Each installed or spare lithium battery must be of a type proven to meet the requirements of each test in the UN Manual of Tests and Criteria, and each spare battery must be individually protected so as to prevent short circuits (by placement in original retail packaging or by otherwise insulating terminals, e.g., by taping over exposed terminals or placing each battery in a separate plastic bag or protective pouch) and carried in carry-on baggage only. In addition, each installed or spare battery must not exceed the following:

(i) For a lithium metal battery, a lithium content of not more than 2 grams per battery; or

(ii) For a lithium-ion battery, a rating of not more than 100 Wh, except that up to two batteries with a watt hour rating of more than 100 Wh but not more than 300 Wh may be carried.

* * * * *

18. In § 175.75, the last sentence of paragraph (c) and paragraph (e)(1) are revised to read as follows:

§ 175.75 Quantity limitations and cargo location.

* * * * *

(c) * * * The requirements of this paragraph do not apply to ORM–D materials or Class 9 materials, except that lithium batteries, including lithium batteries packed with or contained in equipment may be loaded in an inaccessible manner only if they are packaged in an container approved by the FAA Administrator for such use or carried in a Class C cargo compartment.

* * * * *

(e) * * *

(1) Class 3, Packing Group III, materials that do not meet the definition of another hazard class, Division 6.1 materials except those also labeled FLAMMABLE, Division 6.2, Class 7, or ORM–D materials; Class 9 materials, except that lithium batteries, including lithium batteries packed with or contained in equipment may be loaded in an inaccessible manner only if they are packaged in a container approved by the FAA Administrator for such use or carried in a Class C cargo compartment.

* * * * *

Issued in Washington, DC, on January 6, 2010, under authority delegated in 49 CFR part 1.

Magdy El-Sibaie,

Acting Associate Administrator for Hazardous Materials Safety.

[FR Doc. 2010–281 Filed 1–8–10; 8:45 am]

BILLING CODE 4910–60–P

DEPARTMENT OF COMMERCE

National Oceanic and Atmospheric Administration

50 CFR Part 300

[Docket No.: 080228336–9133–01]

RIN 0648–AW09

Implementation of Regional Fishery Management Organizations' Measures Pertaining to Vessels that Engaged in Illegal, Unregulated, and Unreported Fishing Activities

AGENCY: National Marine Fisheries Service (NMFS), National Oceanic and Atmospheric Administration (NOAA), Commerce.

ACTION: Proposed rule; request for comments.

SUMMARY: NMFS proposes regulations to implement international conservation and management measures adopted by the International Commission for the Conservation of Atlantic Tunas (ICCAT), Commission for the Conservation of Antarctic Marine Living Resources (CCAMLR), Northwest Atlantic Fisheries Organization (NAFO), Western and Central Pacific Fisheries Commission (WCPFC), Inter-American Tropical Tuna Commission (IATTC), and the Agreement on the International Dolphin Conservation Program (AIDCP). The measures pertain to vessels that have been identified by these regional fishery management organizations (RFMOs) as having engaged in illegal, unregulated, and unreported (IUU) fishing activities and included on their respective IUU vessel lists. As a party to these RFMOs, the United States is obligated to take certain actions against the listed IUU vessels in a manner consistent with our laws and policies. This proposed rule would clarify the domestic processes by which the United States intends to meet these obligations. Specifically, it would implement obligations to restrict entry into any port or place of the United States and access to port services by vessels on the IUU vessel lists of the aforementioned RFMOs. It would also prohibit the provision by persons and business entities subject to U.S. jurisdiction of certain services to, and commercial transactions with, such vessels. NMFS is seeking public comment on the proposed rule.

DATES: Written comments must be received by February 25, 2010.

ADDRESSES: Written comments on this action, identified by RIN 0648–AW09, may be submitted by any of the following methods:

• Electronic Submissions: Submit all electronic public comments via the Federal eRulemaking Portal at *http://www.regulations.gov*.

• Mail: Mi Ae Kim, Trade and Marine Stewardship Division, Office of International Affairs, NMFS, 1315 East-West Highway, Silver Spring, MD 20910.

All comments received are a part of the public record and will generally be posted to *http://www.regulations.gov* without change. No comments will be posted for public viewing until after the comment period has closed. All personal identifying information (for example, name and address) voluntarily submitted by the commenter may be publicly accessible. Do not submit confidential business information or otherwise sensitive or protected information.

NMFS will accept anonymous comments. Enter N/A in the required fields if you wish to remain anonymous. Attachments to electronic comments will be accepted in Microsoft Word, Excel, WordPerfect, or Adobe portable document file (pdf) formats only.

FOR FURTHER INFORMATION CONTACT: Mi Ae Kim, Trade and Marine Stewardship Division, Office of International Affairs, NMFS (phone 301–713–9090, fax 301–713–9106, or e-mail *mi.ae.kim@noaa.gov*.)

SUPPLEMENTARY INFORMATION:

Background

The effective management of marine fisheries resources, including highly migratory species, fish stocks that migrate between or occur in both the exclusive economic zone (EEZ) of one or more nations and the high seas, and discrete high seas stocks, depends on compliance with the applicable conservation and management measures of regional fisheries management organizations (RFMOs) and domestic laws. To promote compliance with such conservation and management measures and combat IUU fishing, several RFMOs of which the United States is a member have adopted binding measures that establish both procedures for identifying vessels engaged in IUU fishing activities and actions to be taken against such vessels. See IUU Vessel Listing Procedures section below for explanation of how vessels are listed or delisted from RFMO IUU vessel lists. The International Commission for Conservation of Atlantic Tunas (ICCAT), Commission for the Conservation of Antarctic Marine Living Resources (CCAMLR), Northwest Atlantic Fisheries Organization (NAFO), Western and Central Pacific Fisheries Commission (WCPFC), Inter-American Tropical Tuna Commission (IATTC), and the Agreement on the International Dolphin Conservation Program (AIDCP; the AIDCP is not an RFMO per se, but is referred to as such for the purposes of this action) adopted measures that include closure of ports or markets to vessels that the RFMOs identified as having engaged in IUU fishing activities and included on their respective list of IUU vessels. Such measures can act as a strong deterrent to engage in, or provide support to vessels that engage in, IUU fishing by reducing the profitability of such activities.

The United States is obligated as a member of the RFMOs listed above to undertake specific actions to address IUU fishing activity pursuant to the following measures:

• ICCAT Recommendation 06–12 as amended by Recommendation 07–09 - Recommendation by ICCAT amending the Recommendation by ICCAT to establish a list of vessels presumed to have carried out illegal, unreported and unregulated fishing activities in the ICCAT Convention Area,

• CCAMLR Conservation Measure 10–06 - Scheme to promote compliance by Contracting Party vessels with CCAMLR conservation measures,

• CCAMLR Conservation Measure 10–07 - Scheme to promote compliance by non-Contracting Party vessels with CCAMLR conservation measures,

• NAFO Conservation and Enforcement Measure Chapter VI - Scheme to promote compliance by non-contracting party vessels with recommendations established by NAFO,

• WCPFC Conservation and Management Measure 2007–03 - Conservation and management measure to establish a list of vessels presumed to have carried out illegal, unreported and unregulated fishing activities in the western and central Pacific Ocean,

• IATTC Resolution C–05–07 - Resolution to establish a list of vessels presumed to have carried out illegal, unreported and unregulated fishing activities in the eastern Pacific Ocean, and

• AIDCP Resolution A–04–07 - Resolution to establish a list of vessels presumed to have carried out illegal, unreported and unregulated fishing activities in the Agreement Area.

NMFS is proposing these regulations pursuant to its authority to administer and enforce the statutes that implement the conventions of the RFMOs mentioned above. Statutes that authorize rulemaking to implement RFMO conservation and management measures include the Atlantic Tunas Convention Act of 1975, 16 U.S.C. 971 *et seq.*, the Antarctic Marine Living Resources Convention Act of 1984, 16 U.S.C. 2431 *et seq.*, the Northwest Atlantic Fisheries Convention Act of 1995, 16 U.S.C. 5601 *et seq.*, the Western and Central Pacific Fisheries Convention Implementation Act, 16 U.S.C. 6901 *et seq.*, the Tuna Conventions Act of 1950, 16 U.S.C. 951 *et seq.*, and the Marine Mammal Protection Act, 16 U.S.C. 1361 *et seq.* These statutes authorize the promulgation of regulations as necessary to carry out the purposes and management measures of each RFMO convention.

At the time of this rulemaking, a total of approximately 90 vessels were listed on the IUU vessel lists of the five RFMOs to which the United States is a party. AIDCP has not developed an IUU vessel list at this time. The procedures for listing and delisting vessels are described below. The lists include mostly harvesting and transport vessels. The United States, however, is generally not a destination for foreign fishing vessels because of the Nicholson Act (46 U.S.C. 55114). Under the Nicholson Act, administered by U.S. Customs and Border Protection, foreign vessels are generally prohibited from unloading fish and fish product that were harvested or taken onboard on the "high seas" in any U.S. port, with the exceptions of unloading in ports in the U.S. territories of American Samoa, Guam, and the Commonwealth of the Northern Mariana Islands; certain landings in the U.S. Virgin Islands; and landings pursuant to certain conventions to which the United States is a party. Because the United States is, for the most part, not an offloading port for foreign harvesting vessels, the proposed regulations would primarily concern transport vessels included on the relevant IUU vessel lists.

Table 1 summarizes the measures that parties to the RFMOs are required to implement per the previously-referenced RFMO measures. While there are differences in the specific obligations, the RFMOs share the goal of combating IUU fishing.

BILLING CODE 3510–22–S

Table 1. RFMO Measures for Listed IUU Vessels

RFMO Measures	IATTC & AIDCP	ICCAT	CCAMLR	NAFO	WCPFC
(a) Prohibit the entry of listed vessels into ports, except in cases of force majeure		✓		✓*	
(b) Deny listed vessels access to ports unless for the purpose of enforcement or for reasons of force majeure or when in danger or distress. Vessels allowed entry to port are to be inspected. Where port access is granted, examine documentation and, where possible, confiscate catch. Also prohibit all non-emergency support.			✓		
(c) Ensure that listed vessels that voluntarily enter ports are not authorized to land, transship, refuel, or resupply but are inspected upon entry					✓
(d) Ensure that listed vessels that enter ports voluntarily are not authorized to land or transship therein; ensure U.S. vessels do not transship with listed vessels	✓				
(e) Prohibit the supply of provisions, fuel or other services to listed vessels; prohibit change of crew except in cases of force majeure.				✓	
(f) Prohibit the landing of fish from listed vessels				✓	
(g) Do not authorize listed vessels to land, transship, refuel, resupply, or engage in other commercial transactions		✓			
(h) Ensure that fishing vessels, support vessels, mother ships or cargo vessels flying U.S. flag do not participate in any transshipment or joint fishing operations with, support or re-supply vessels on IUU list.		✓**	✓	✓**	✓
(i) Prohibit chartering of a listed vessel	✓	✓	✓	✓	✓
(j) Refuse to grant U.S. flag to listed vessels	✓***	✓***	✓	✓	✓
(k) Do not issue a license to listed vessels to fish in waters under U.S. jurisdiction			✓	✓	
(l) Prohibit commercial transactions, imports, landings, and/or transshipment of species covered by RFMO from listed vessels	✓	✓		✓****	✓
(m) Encourage traders, importers, transporters and others involved to refrain from transactions in, and transshipment of, covered species from listed vessels	✓	✓	✓	✓	✓
(n) Collect and exchange information with the aim of searching for, controlling and preventing false import/export certificates for covered species from listed vessels	✓	✓	✓	✓	✓

* NAFO added a provision stating that nothing in its scheme to promote compliance should prevent a Contracting Party from allowing a Non-Contracting Party vessel entry for the purposes of inspection and taking enforcement action.

** The ICCAT and NAFO measures include "engage in fish processing operations" in addition to transshipment and joint fishing operations.

*** Refuse to grant flag to listed vessel unless it has changed owner and new owner has provided sufficient evidence demonstrating the previous owner or operator has no further legal, beneficial or financial interest in, or control of, the vessel, or having taken into account all relevant facts, the United States determines that granting the vessel its flag will not result in IUU fishing.

**** NAFO's comparable measure is "prohibit where traceable imports and landings of fish from IUU vessels."

Notes:

- AIDCP measures are related to tuna taken in the AIDCP Agreement Area caught by vessels on the AIDCP IUU Vessel List.
- Listed Vessels can include: Fishing Vessels, Support Vessels, Mother-Ships, and Cargo Vessels.
- RFMO measures are adapted for the United States from CCAMLR Conservation Measure 10-06 (2006) and 10-07 (2006); IATTC Resolution C-05-07; AIDCP Resolution A-04-07; ICCAT Recommendation 06-12; WCPFC Conservation and Management Measure 2007-03; NAFO Article 58.
- CCAMLR measure, to not certify export or re-export government authority validation when shipment is declared to have been caught by an IUU vessel, is not included in the table.

BILLING CODE 3510–22–C

NMFS is proposing a single set of regulations to clarify domestic implementation of IUU vessel list measures under the relevant RFMOs and to facilitate better enforcement of those measures. The regulations describe the actions that the United States will take, consistent with its international obligations, with respect to foreign, listed IUU vessels. Foreign vessels include vessels not entitled to fly the flag of the United States and vessels operated under the authority of a country other than the United States.

These regulations detail the authorities of the Assistant Administrator for Fisheries (Assistant Administrator) to take actions against a listed IUU vessel in accordance with the

requirements of the appropriate RFMO conservation measure. The regulations provide the Assistant Administrator some discretion, albeit in accordance with the relevant RFMO measures, in determining the appropriate action to take with respect to a listed IUU vessel seeking entry into, or use of, a U.S. port. For example, the NAFO measure requires vessels on its IUU vessel list to be denied port entry. However, under the NAFO measure and pursuant to these regulations, there is flexibility to allow such vessels into port for information-gathering, inspection, or enforcement purposes if NMFS determines that doing so is appropriate under the specific circumstances and furthers the goals of combating IUU fishing.

These regulations also specify the prohibitions applicable to listed IUU vessels as well as for those persons or entities subject to the jurisdiction of the United States who may consider business relationships with listed vessels. NMFS, in particular the Office of Law Enforcement, will cooperate with the U.S. Coast Guard, U.S. Customs and Border Protection, and other state and Federal agencies as appropriate in the implementation of the rule.

The following describes each section of this proposed rule and the basis for the proposed regulatory text.

Definitions (Section 300.301)

To ensure clarity of the terms used in the proposed rule, definitions are included for landing, processing, and transshipping. The text of the RFMO conventions, the implementing statutes, and regulations related to the RFMOs were considered in developing these regulatory definitions. "Landing" and "transshipping" were defined in some of the documents, but "processing" was not. "Landing" is defined in the CCAMLR regulations (50 CFR 300.101) and in the IATTC regulations (50 CFR 300.21). "Transshipping" is defined in the IATTC regulations (50 CFR 300.21), WCPFC statute and treaty (16 U.S.C. 6901(11) and Part 1, Article 1(h) of the treaty), and CCAMLR regulations (50 CFR 300.101). The definitions for this rule are intentionally broad to capture a broad range of activities that may be covered by the relevant RFMO measures.

"Listed IUU vessel" is also defined to identify the specific vessels to which the rule applies. Listed IUU vessel is defined as a vessel that appears on a final IUU vessel list adopted or approved by an RFMO to which the United States is a party.

Port Entry (Section 300.302)

This proposed rule would allow the Assistant Administrator to deny a foreign, listed IUU vessel entry into ports or places subject to the jurisdiction of the United States, except in cases of *force majeure*. The Assistant Administrator will make a determination about the denial of port entry on a case-by-case basis, taking into account the IUU vessel list that includes the vessel seeking entry and the provisions in the relevant RFMO conservation and management measure that applies to the listed IUU vessel. As shown on Table 1, obligations with respect to the denial of port entry differ across the RFMOs. Denial of port entry may be encouraged or mandatory, subject to certain exceptions, and in some cases accompanied by a requirement to inspect vessels that come into port. The ICCAT and NAFO measures call for prohibiting vessels on their respective IUU vessel lists from entering port, except in cases of *force majeure*. NAFO includes a provision that allows a contracting party to grant port entry to a vessel from a non-contracting party for the purposes of inspection and taking enforcement action. IATTC and WCPFC measures do not call for denial of port entry but obligate their members to ensure that listed vessels that voluntarily enter ports are not authorized to land or transship. The WCPFC measure further states that listed vessels must be inspected upon entry and must not be authorized to refuel or resupply. CCAMLR's conservation measures call for denial of port access except for the purpose of inspecting it and taking other appropriate enforcement action or in cases of *force majeure*. The CCAMLR measures require examination of the vessel's documentation and, where possible, seizure of catch. Given the differences in the measures, the proposed rule was drafted to provide that the Assistant Administrator has discretion in the denial of port entry. This would enable domestic implementation that is flexible, facilitates enforcement and is consistent with the relevant RFMO measures that pertain to the vessel at issue while allowing for the full exercise of NOAA's enforcement authority under other domestic laws such as the Lacey Act (33 U.S.C. 3371 *et seq.*).

Currently, as described in more detail below, most foreign-flagged vessels are required to submit a notice of arrival to the Coast Guard when entering a port or place of the United States. The notice of arrival from a listed IUU vessel will trigger an interagency consultation. The Assistant Administrator will take the results of the interagency consultation into consideration when making a determination on whether to deny a listed IUU vessel entry into a U.S. port. For example, a vessel on NAFO's IUU vessel list may be allowed entry into port for inspection if the Assistant Administrator determines, in consultation with other agencies, that inspection of the vessel is necessary to verify its identity. As many IUU vessels conceal their name and/or identification number (such as the call sign or Lloyds/International Maritime Organization number) and information on IUU vessels lists is often incomplete, an inspection may be necessary to verify that the vessel is in fact the one included on the relevant IUU list.

Vessels flying the flag of the United States would not be prohibited from port entry by the proposed rule in the event such a vessel becomes listed on an RFMO IUU vessel list. Rather, the United States will exercise its authority as a flag state to address the IUU fishing activities of U.S. vessels. The conservation and management measures adopted by the RFMOs to which the United States is a party obligate the United States to take action against its vessels and, where applicable, its nationals for activities that violate or contravene such measures. NOAA's authority to take this action comes from the statutes implementing the international fisheries agreements to which the United States is party. The United States satisfies its obligation by promulgating, and subsequently enforcing, the regulations implementing those statutes. For example, for ICCAT fisheries, regulations are generally promulgated under the dual authority of the Magnuson-Stevens Fishery Conservation and Management Act (MSA; 16 U.S.C. 1801 *et seq.*) and the Atlantic Tunas Convention Act, and the enforcement actions are generally brought under the MSA authority.

The range of enforcement actions that the United States is authorized to take against its nationals is established by the language of the statutes themselves. In general, U.S. fisheries law allows for imposition of civil monetary penalties and permit sanctions (including suspension and revocation of permits), forfeiture of vessels and catch, and criminal penalties for certain violations. NMFS has determined that exercising its flag state authority is a more effective means of addressing IUU activity by U.S. flagged vessels than denial of port privileges.

Access to Port Services (Section 300.303)

For any foreign vessel on an IUU vessel list that enters the United States, the proposed rule would allow the Assistant Administrator to (1) conduct inspections of the vessel, (2) deny the vessel port services, including, but not limited to, refueling, resupplying, and disembarking or embarking crew, and (3) prohibit the vessel from conducting commercial transactions, including, but not limited to, transshipping and landing product. As with denial of port entry, the proposed rule provides the Assistant Administrator with discretion to consider, on a case-by-case basis, which of the above actions to take against the listed IUU vessel. Such a decision would take into account the provisions in the relevant RFMO conservation and management measure, consultations with other agencies as appropriate, and any other relevant factors.

NMFS believes that the flexible approach in the proposed rule is appropriate given the differences in the various RFMO measures (see Table 1). Vessel inspections are required by the conservation measures of CCAMLR and WCPFC. The NAFO measure states that a port State member can allow a vessel entry into its ports for the purpose of conducting an investigation. The ICCAT, IATTC and AIDCP measures do not explicitly require inspections. However, as a sovereign State, the United States has broad authority independent of RFMO measures to inspect a vessel that is in a U.S. port or place, including vessels listed by ICCAT, NAFO, IATTC, and AIDCP. Especially where applicable law allows for the sharing of information gathered during inspections with RFMOs and foreign governments, port and at-sea inspections serve as a critical tool in the effort to combat IUU fishing.

As for denial of port services, ICCAT and WCPFC conservation measures state that refueling and resupply are not to be authorized. CCAMLR measures also require all non-emergency support to be prohibited. Similarly, NAFO calls for prohibitions on the supply of provisions, fuel and other services to, and change of crew on, listed IUU vessels except in cases of force majeure. IATTC and AIDCP measures do not include such prohibitions. The proposed rule could result in the denial of port services (e.g., refueling, resupplying, disembarking and embarking crew) to all foreign vessels on the ICCAT, WCPFC, CCAMLR, and NAFO IUU vessel lists, with certain exceptions essential to the safety, health, and welfare of the crew or in cases of *force majeure*.

The proposed rule would also allow the Assistant Administrator to prohibit listed IUU vessels from engaging in commercial transactions, such as transshipping and landing, in accordance with applicable provisions of RFMO conservation and management measures. According to the measures of IATTC, AIDCP, ICCAT, and WCPFC, listed IUU vessels are to be prohibited from transshipping or landing product. The measures of CCAMLR and NAFO do not specify these prohibitions. However, in the CCAMLR measure, listed IUU vessels that are granted port access are to be inspected and, where possible, their catch confiscated. In the NAFO measure, listed IUU vessels are to be denied entry into ports and landings of fish from listed IUU vessels are to be prohibited. Although the NAFO measure does not explicitly require a prohibition on transshipments by listed vessels, it does prohibit members' vessels from participating in any transshipment with listed IUU vessels. NMFS believes that the proposed rule is consistent with the intent of the CCAMLR and NAFO measures. Under the proposed rule, the prohibition on commercial transactions would apply broadly to vessels on the CCAMLR and NAFO IUU vessel lists, as well as those on the IUU vessel lists of IATTC, AIDCP, ICCAT, and WCPFC. Providing the Assistant Administrator with broad authority to prohibit all listed IUU vessels from transshipping or landing product in any U.S. port or place would facilitate enforcement and therefore is necessary and appropriate to carry out the purpose of the relevant RFMO conservation measures.

Prohibitions (Section 300.304)

The proposed rule prohibits a foreign, listed IUU vessel from entering any port or place subject to the jurisdiction of the United States if it was denied entry by the Assistant Administrator. It also prohibits such vessels from obtaining port services or engaging in commercial transactions if such activities have been denied.

The proposed rule would make it unlawful for any person subject to the jurisdiction of the United States to engage in commercial transactions with a listed IUU vessel, unless authorized to do so by the Assistant Administrator. Such transactions include, but are not limited to:

- Transshipment,
- Processing fish harvested or landed by a listed vessel or processing fish using a listed vessel,
- Joint fishing operations,
- Providing supplies, fuel, crew, or otherwise supporting a listed vessel, or
- Chartering or entering into a chartering arrangement.

Except for the measures of IATTC and AIDCP, the RFMO conservation measures require that their members ensure that fishing vessels, support vessels, mother ships and cargo vessels flying their flags do not support, resupply, or participate in any transshipment or joint fishing operations with vessels on the IUU lists. NAFO further requires members to ensure that such vessels do not engage in fish processing operations with a vessel on their IUU vessel list. All six RFMO measures require that chartering of listed vessels be prohibited (see Table 1). Except for CCAMLR and NAFO, the RFMO measures also require prohibiting commercial transactions involving species covered by the RFMO with listed IUU vessels. While there are differences between the RFMO measures, NMFS is proposing a broad approach: the proposed rule would prohibit all of the above activities, irrespective of which IUU vessel list a vessel is on, subject to the exception spelled out below. NMFS believes that this approach would facilitate compliance by U.S. persons by simplifying what actions must not occur with any vessels on the IUU vessel lists of these RFMOs. In addition, this approach would serve to prevent U.S. persons from being implicated with listed IUU vessels and, thereby, possibly prevent U.S.-flagged vessels from being considered for inclusion on IUU vessel lists.

Recognizing that there are differences between RFMO measures, an exception has been added so that the prohibitions listed in § 300.304(c) would not apply to persons that provide port services to, or engage in other prohibited transactions with, a listed IUU vessel that enters a port or place subject to the jurisdiction of the United States following a decision by the Assistant Administrator to allow the vessel to access port services or engage in commercial transactions. As the Assistant Administrator may allow certain port services for certain listed IUU vessels, in accordance with the relevant RFMO conservation measures, the prohibitions would not apply to those persons who engage in commercial transactions with a listed IUU vessel if the Assistant Administrator has authorized such activities, including in cases of force majeure and where the Assistant Administrator has determined that such services are essential to the safety, health, and welfare of the crew.

The proposed rule would apply the prohibitions on commercial transactions with listed IUU vessels to all persons subject to the jurisdiction of the United States rather than to U.S.-flagged vessels. RFMO measures of ICCAT, CCAMLR, NAFO, and WCPFC specify prohibitions of specific commercial activities (e.g., transshipment, joint fishing operations, support, and re-supply) for several vessel types, but IATTC, AIDCP, ICCAT, and WCPFC also include prohibitions on commercial transactions that are not specific to vessels. The proposed rule applies generally to persons, which will simplify and thus facilitate enforcement and ensure more effective implementation of the various RFMO measures.

Measures Not Addressed in This Proposed Rule

As shown on Table 1, the RFMOs also obligate the United States to take the following measures as a flag state:

- Deny the U.S. flag to listed IUU vessels (required by all RFMOs),
- Prohibit issuing a license to listed IUU vessels to fish in waters under U.S. jurisdiction (required by CCAMLR and NAFO),
- Prohibit imports of species managed by the RFMO from listed IUU vessels (required by all RFMOs),
- Encourage dealers, importers, transporters and others involved to refrain from transactions in, and transshipment of, covered species from listed IUU vessels (required by all RFMOs), and
- Collect and exchange information with the aim of searching for, controlling and preventing false import/export certificates for species managed by the RFMO from listed IUU vessels (required by all RFMOs).

These measures either have been or, if appropriate, will be implemented by the United States in separate regulatory and non-regulatory actions. With respect to the first bullet, U.S. flags are granted by the U.S. Coast Guard. NMFS will coordinate with the appropriate Coast Guard office to ensure that listed vessels are not granted the U.S. flag. With respect to the second bullet, foreign vessels would not be granted a license to fish unless the United States, through the Department of State, entered into a governing international fishery agreement and at this time the only such agreement is with Russia. This governing international fishery agreement includes cooperation between the United States and Russia to address illegal or unregulated fishing activities on the high seas in the North Pacific Ocean and Bering Sea. With respect to the third bullet, the RFMO measures require prohibitions on conducting commercial transactions, imports, landings, and transshipment of species managed by RFMOs from listed vessels. As described earlier, this proposed rule would prohibit persons subject to U.S. jurisdiction from engaging in commercial transactions, which can include landings from, and transshipment with, listed IUU vessels. The prohibition on imports from IUU vessels has already been implemented for ICCAT-managed species (50 CFR 635 Subparts D and E). Similar prohibitions for species managed by other RFMOs may be incorporated into the respective implementing regulations, as necessary. The last two bullet items (m and n in Table 1) are not regulatory in nature. NMFS conducts outreach and encourages U.S. fishing and support industries to consult RFMO IUU vessel lists before making commercial arrangements with listed vessels and, specifically, to avoid providing to IUU vessels any support or services that are prohibited by the relevant RFMO (item m in Table 1). As for collecting and exchanging information with the aim of searching for, controlling, and preventing false import/export certificates for covered species from listed vessels (item n in Table 1), the United States is a founding and active member of the International Monitoring, Control, and Surveillance Network, which works multilaterally to exchange fisheries and enforcement information.

IUU Vessel Listing Procedures

ICCAT, CCAMLR, NAFO, WCPFC, IATTC, and AIDCP use similar criteria and procedures for listing and delisting vessels (see the respective conservation and management measures available on the RFMO websites). The process for listing and delisting vessels can span several months, involving notifications to RFMO members and non-contracting parties, gathering of information, and consideration of the information at RFMO meetings. These RFMOs may list vessels that engaged in activities that undermine the effectiveness of conservation and management measures, such as:

- Fishing in an RFMO's management (or convention) areas without authorization,
- Failing to record or declare their catches, or making false reports,
- Using prohibited fishing gear in contravention of conservation measures, or
- Transshipping with, or participating in joint operations with, re-supplying, or re-fueling vessels included in IUU vessel lists.

Each RFMO seeks information from member countries and other entities about vessels that violate any relevant conservation and management measures. In the case of ICCAT, CCAMLR, NAFO, and WCPFC, a flag state that has a vessel that allegedly engaged in IUU activity is provided notice about the submittal of information to the RFMO for consideration of its inclusion on the IUU vessel list. The Executive Secretary, Director, or other RFMO official uses all submitted information to compile a draft list of IUU vessels by a pre-determined time specific to their RFMO (except NAFO, which compiles a provisional list but not a draft list). The draft list and supporting information are then provided to all members of the RFMO and to the nation of the vessel presumed to have carried out the IUU activity. Using information sent in response to the draft list, a provisional list of IUU vessels is compiled and distributed to members along with supporting information prior to an RFMO's annual meeting. Decisions to adopt the provisional IUU list are determined during the annual meetings. Decisions on removal of vessels from the list adopted the prior year are also made at the annual meeting. However, in the case of ICCAT and WCPFC, vessels can also be removed outside of the annual meetings. Additionally, ICCAT and NAFO may add vessels outside of the annual meetings on the grounds that they have been listed by another RFMO. Adoption of IUU vessel lists is governed by procedural rules of each RFMO.

Generally, an RFMO will remove vessels from its provisional or final IUU vessels lists if the vessels are determined not to have taken part in IUU fishing or if effective action has been taken in response to the IUU fishing in question, such as prosecution and imposition of sanctions of adequate severity. Other factors that could also lead to removal of a vessel from an RFMO's IUU vessel list include a change in vessel ownership where the new owner can establish that the previous owner no longer has any legal, financial, or real interests in the vessel or exercises control over it and the new owner has not participated in IUU fishing.

Given that the RFMO annual meetings occur at different times of the year (generally IATTC and AIDCP in June, NAFO in September, CCAMLR at the end of October and early November, ICCAT in November, and WPCFC in December) the composition of the lists changes throughout the year. The websites of each RFMO should be

monitored for the latest IUU vessel lists. Internet links to the RFMO vessel lists are provided below in the RFMO IUU Vessel Lists section.

Coordination With Other Federal Agencies

NMFS is coordinating with the U.S. Coast Guard (USCG) to ensure these regulations are compatible with Coast Guard operations. Coast Guard regulations require foreign vessels to give notice prior to entering a U.S. port or place of destination (defined in 33 CFR 160.204 as any port or place in which a vessel is bound to anchor or moor). Generally, all foreign vessels greater than 300 gross tons must provide notice of their arrival at least 96 hours in advance, in accordance with 33 CFR 160.212(a)(3). The vessels are required to report electronically the vessel name, voyage, cargo, crewmembers, and other information to the Coast Guard's National Vessel Movement Center (NVMC) at least 96 hours before entering the port or place of destination. The Coast Guard is in the process of modifying the regulation to eliminate the exception for foreign vessels less than 300 gross tons (73 FR 76295, December 16, 2008).

When the NVMC receives a notice of arrival, NVMC staff examines the information and then transmits the relevant information to Customs and Border Protection and to the Coast Guard Captain of the Port. NMFS will provide the IUU vessel lists and any changes made thereto, along with other relevant information, to the Coast Guard for inclusion in their maritime domain monitoring system. For any vessels on RFMO IUU vessel lists, the Coast Guard would notify NMFS and the Department of State of the impending arrival. Such notification would trigger interagency consultations, among, at a minimum, the Department of State, Coast Guard, and NMFS to determine the most appropriate course of action in light of RFMO requirements.

Due to interjurisdictional issues related to the proposed rule, NMFS is also coordinating with the Department of State, Customs and Border Protection, the Office of the U.S. Trade Representative and other relevant agencies and offices on this rulemaking.

RFMO IUU Vessel Lists

NMFS maintains an internet website where internet links to relevant conservation measures and IUU vessel lists can be found *http://www.nmfs.noaa.gov/ia*. The following are the current Internet website links for RFMO IUU vessel list conservation measures and their vessel lists:

International Commission for the Conservation of Atlantic Tunas (ICCAT)

Conservation Measure: *http://www.iccat.int/en/RecsRegs.asp* (Select Key 07–09 and 06–12)

IUU Vessel List: *http://www.iccat.int/en/IUU.asp*

Commission for the Conservation of Antarctic Marine Living Resources (CCAMLR)

Conservation Measures:http://www.ccamlr.org/pu/e/e__pubs/cm/06–07/10–06.pdf,

http://www.ccamlr.org/pu/e/e__pubs/cm/06–07/10–07.pdf

IUU Vessel List: http://www.ccamlr.org/pu/E/sc/fish-monit/iuu-vess-list.htm

Northwest Atlantic Fisheries Organization (NAFO)

Conservation Measure: http://www.nafo.int/fisheries/frames/fishery-iuu.html

IUU Vessel List: http://www.nafo.int/fisheries/frames/fishery-iuu.html

Western and Central Pacific Fisheries Commission (WCPFC)

Conservation Measure: http://www.wcpfc.int/vessels#IUU

IUU Vessel List: http://www.wcpfc.int/vessels#IUU

Inter-American Tropical Tuna Commission (IATTC)

Conservation Measure: http://www.iattc.org/PDFFiles2/C–05–07–IUU-Vessel-list.pdf

IUU Vessel List: http://www.iattc.org/VesselRegister/IUU.aspx?Lang=en

Agreement on the International Dolphin Conservation Program

Conservation Measure: http://www.iattc.org/PDFFiles2/A–04–07%20IUU%20vessel%20list.pdf

IUU Vessel List: No vessels listed.

Classification

This proposed rule is published under the authority of the Atlantic Tunas Convention Act of 1975 (16 U.S.C. 971 *et seq.*), Antarctic Marine Living Resources Convention Act of 1984 (16 U.S.C. 2431 *et seq.*), Northwest Atlantic Fisheries Convention Act of 1995 (16 U.S.C. 5601 *et seq.*), Western and Central Pacific Fisheries Convention Implementation Act (16 U.S.C. 6901–6910), Tuna Conventions Act of 1950 (16 U.S.C. 951–962), and the Marine Mammal Protection Act (11 Stat. 1122; 16 U.S.C. 1361 *et seq.*). The NMFS Assistant Administrator has determined that this proposed action is consistent with the provisions of these and other applicable laws, subject to further consideration after public comment.

This proposed rule has been determined to be not significant for the purposes of Executive Order 12866.

An initial regulatory flexibility analysis (IRFA) was prepared, as required by section 603 of the Regulatory Flexibility Act (RFA). The IRFA describes the economic impact this proposed rule, if adopted, would have on small entities of the United States. The following elements should be included in an IRFA: a description of the action, why it is being considered, the legal basis for the action, description and where feasible an estimate of the number of small entities to which the action applies, description of the projected reporting, record-keeping and other compliance requirements, and an identification of all relevant Federal rules which may duplicate, overlap, or conflict with the proposed rule. The action, why it is being considered, and its legal basis are described in detail earlier in the preamble. There are no new reporting or recordkeeping requirements contained in this action. This proposed rule has also been determined not to duplicate, overlap, or conflict with any other Federal rules. The remaining IRFA elements are described below.

The proposed rule allows the NMFS Assistant Administrator to deny a listed IUU vessel entry into a port or place of the United States, in accordance with applicable provisions of RFMO conservation and management measures. The proposed rule also allows the Assistant Administrator, in accordance with applicable provisions of RFMO conservation and management measures, to prohibit certain transactions, such as transshipping with, processing fish using, or supplying provisions or fuel to IUU vessels. The following is the analysis of the economic impacts on small entities.

The proposed rule would apply to U.S. entities that engage in or could engage in commercial transactions with vessels that are on the final IUU vessel lists adopted or approved by ICCAT, CCAMLR, NAFO, WCPFC, IATTC, and AIDCP. Such transactions include: (1) engaging in transshipment with a listed IUU vessel, (2) processing fish harvested or landed by a listed IUU vessel or processing fish using a listed IUU vessel, (3) participating in joint fishing operations with a listed IUU vessel, (4) providing supplies, fuel, crew, or otherwise support a listed IUU vessel, or (5) chartering or entering into a chartering arrangement with a listed IUU vessel.

If this proposed rule goes into effect, U.S. entities (i.e., persons, businesses) would not be able to legally conduct business with vessels that are on the IUU vessel lists of RFMOs to which the U.S. is a party, subject to certain exceptions. The potential for transactions between these entities and

listed IUU vessels is limited, however, due to the small number of attempts made by listed IUU vessels to enter U.S. ports.

In the aggregate, approximately 90 vessels are listed as IUU vessels by IATTC, ICCAT, CCAMLR, NAFO, and WCPFC. To date, none of these vessels are flagged to the United States. According to information recently compiled by Pew Environment Group, about 87 percent of all the vessels listed by the six RFMOs to which the United States is a party are harvesting vessels (*http://www.portstateperformance.org*). As foreign harvesting vessels are generally prohibited from unloading fish in the United States by the Nicholson Act, most listed IUU vessels would not likely arrive in U.S. ports. As a result, U.S. entities would not normally conduct business with these vessels.

Coast Guard data show that only two listed IUU vessels have ever come into U.S. ports. The lack of port visits by listed IUU vessels, or foreign fishing vessels generally, indicates an extremely low likelihood of transactions between U.S. entities and listed IUU vessels. Coast Guard holds records of notices of arrivals and departures from commercial vessels. The records are for vessels measuring 300 gross tons or greater, except for the foreign vessels that entered any port or place in the Seventh Coast Guard District (includes South Carolina, most of Georgia and Florida, Puerto Rico, and U.S. Virgin Islands) where all vessels, irrespective of their capacity, must provide such notices. The requirements for notices of arrival are under 33 CFR part 160 subpart C. The non-harvesting vessels that are on the IUU vessel lists are over 300 gross tons, in which case, most arrivals by these vessels would be contained in the Coast Guard database. That database shows that two listed IUU vessels arrived in U.S. ports in 2007. This was a negligible portion of the total 135,499 arrival notices submitted to the Coast Guard by 12,148 commercial vessels that same year.

With regard to the possible economic effects of this action, NMFS anticipates that U.S. entities would not be significantly affected by this action because they should be able to offset lost business opportunities by conducting business with non-listed vessels. Thus, small entities would not be significantly affected by the prohibitions in the proposed rule.

A no-action alternative, where NMFS would not promulgate the proposed rule, was analyzed. This alternative to the proposed rule may demonstrate the least burden or economic impact to small entities. However, the financial risks associated with business transactions with listed IUU vessels likely have already caused U.S. entities to avoid such business transactions. The RFMOs adopted their IUU vessel list measures several years a go, and NMFS has advised U.S. entities of the potential ramifications of conducting business with a listed IUU vessel as the United States and other countries are obligated to carry out RFMO IUU vessel measures, such as port entry restrictions. Even under the no-action alternative, listed IUU vessels that transport fish product from the United States may not be able to deliver that product to any country that has implemented the relevant RFMO conservation and management measures.

NMFS does not expect a substantial number of small entities to be affected by the proposed rule because arrival attempts by listed IUU vessels into the ports or places of the United States are so few in number. Thus, only a handful of potential transactions would likely be affected as a result of this proposed rulemaking. For any entities that could be affected, NMFS expects that the proposed rule would not have a significant economic impact because the number of legal vessels entering the United States would far exceed the number of listed IUU vessels that could attempt to enter the United States.

List of Subjects in 50 CFR Part 300

Fisheries, Fishing, Fishing vessels, Illegal, unreported or unregulated fishing, Foreign relations, Treaties.

Dated: January 4, 2010.

Samuel D. Rauch III,

Deputy Assistant Administrator for Regulatory Programs, National Marine Fisheries Service.

For the reasons set out in the preamble, 50 CFR part 300 is proposed to be amended as follows:

PART 300–INTERNATIONAL FISHERIES REGULATIONS

1. Subpart P is added to part 300 to read as follows:

Subpart P—Vessels on IUU Vessel Lists

Sec.

300.300 Purpose and Scope.
300.301 Definitions.
300.302 Port entry by foreign, listed IUU vessels.
300.303 Port access by foreign, listed IUU vessels.
300.304 Prohibitions.

Subpart P–Vessels on IUU Vessel Lists

Authority: 16 U.S.C. 971 *et seq.*; 16 U.S.C. 2431 *et seq.*; 16 U.S.C. 5601 *et seq.*; 16 U.S.C. 6901–6910; 16 U.S.C. 951–962; and 11 Stat. 1122; 16 U.S.C. 1361 *et seq.*

§ 300.300 Purpose and scope.

(a) This subpart implements internationally-agreed measures pertaining to foreign vessels determined to have engaged in illegal, unregulated, and unreported (IUU) fishing and placed on IUU vessel lists of the:

(1) International Commission for the Conservation of Atlantic Tunas (ICCAT),

(2) Commission for the Conservation of Antarctic Marine Living Resources (CCAMLR)

(3) Northwest Atlantic Fisheries Organization (NAFO),

(4) Western and Central Pacific Fisheries Commission (WCPFC),

(5) Inter-American Tropical Tuna Commission (IATTC), and

(6) Parties to the Agreement on the International Dolphin Conservation Program (AIDCP).

(b) For purposes of this subpart, the above organizations are referred to as regional fishery management organizations (RFMOs). Each of these RFMOs adopts or approves an IUU vessel list in accordance with their respective rules and procedures. The lists are publicly available at each RFMO's website. The regulations in this subpart apply to all persons subject to the jurisdiction of the United States wherever they are.

§ 300.301 Definitions.

In addition to the terms defined in § 300.2, the terms used in this subpart have the following meanings.

Landing means to begin to offload fish, or to offload fish from any vessel.

Listed IUU Vessel means a vessel that is included on a final IUU vessel list adopted or approved by an RFMO to which the United States is a party.

Processing means the preparation or packaging of fish to render it suitable for human consumption, retail sale, industrial uses or long-term storage, including, but not limited to, cooking, canning, smoking, salting, drying, filleting, freezing, or rendering into meal or oil.

Transshipping means the offloading, unloading, or transferring of fish or fish products from one vessel to another.

§ 300.302 Port entry by foreign, listed IUU vessels.

The Assistant Administrator may, in accordance with applicable provisions of RFMO conservation and management measures, deny a foreign, listed IUU vessel entry to any port or place subject to the jurisdiction of the United States, except in cases of *force majeure*.

§ 300.303 Port access by foreign, listed IUU vessels.

If a foreign, listed IUU vessel is allowed to enter a port or place subject to the jurisdiction of the United States, the Assistant Administrator may, in accordance with applicable provisions of RFMO conservation and management measures, take one or more of the following actions:

(a) Inspect the vessel;

(b) Deny the vessel access to port services, including but not limited to refueling, resupplying, or disembarking or embarking of crew; or

(c) Prohibit the vessel from engaging in commercial transactions including, but not limited to, transshipping or landing product.

§ 300.304 Prohibitions.

(a) It is unlawful for a foreign, listed IUU vessel denied entry under § 300.302 to enter any port or place subject to the jurisdiction of the United States.

(b) It is unlawful for any foreign, listed IUU vessel to obtain port services or engage in commercial transactions, or attempt to obtain such services or engage in such transactions, if such activities have been denied or prohibited under § 300.303(b) and/or § 300.303(c) or if the vessel has been denied entry under § 300.302.

(c) It is unlawful for any person, without prior authorization from the Assistant Administrator, to engage in commercial transactions with listed IUU vessels. Such transactions include, but are not limited to:

(1) Transshipment;

(2) Processing fish harvested or landed by a listed IUU vessel or processing fish using a listed IUU vessel;

(3) Joint fishing operations;

(4) Providing supplies, fuel, crew, or otherwise supporting a listed IUU vessel; or

(5) Chartering or entering in a chartering arrangement with a listed IUU vessel.

(d) The prohibitions listed in § 300.304(c) shall not apply when the Assistant Administrator has authorized a listed IUU vessel to access such port services or engage in such commercial transactions, in accordance with applicable provisions of RFMO conservation and management measures, including in cases of force majeure and where the Assistant Administrator has determined that such services are essential to the safety, health, and welfare of the crew.

[FR Doc. 2010–144 Filed 1–8–10; 8:45 am]

BILLING CODE 3510–22–S

Notices

Federal Register

Vol. 75, No. 6

Monday, January 11, 2010

This section of the FEDERAL REGISTER contains documents other than rules or proposed rules that are applicable to the public. Notices of hearings and investigations, committee meetings, agency decisions and rulings, delegations of authority, filing of petitions and applications and agency statements of organization and functions are examples of documents appearing in this section.

DEPARTMENT OF AGRICULTURE

Forest Service

Notice of New Fee Site; Federal Lands Recreation Enhancement Act (Title VIII, Pub. L. 108–447)

AGENCY: Forest Service, USDA.

ACTION: Notice of new fee site and solicitation of comments.

SUMMARY: The Grand Mesa, Uncompahgre and Gunnison (GMUG) National Forests proposes to begin charging fees for the overnight rental of three cabins including the Matterhorn Guard Station, the Lone Cone Guard Station and the Alpine Guard Station. Rental of cabins on the GMUG National Forests and other National Forests of Colorado is very popular and shows that the public appreciates and enjoys the use and availability of historic rental cabins. Funds from the rentals will be used for the continued operation and maintenance of the rental cabins. The Matterhorn Guard Station is located in T41N, R9W, Section 5, NMPM, and the Lone Cone Station is located in T42N, R12W, Section 23, NMPM; both are in the Norwood Ranger District. The Alpine Guard Station is located in T46N, R5W, Section 24, NMPM, on the Gunnison Ranger District.

DATES: The sites are expected to become available for rent July 2010. Comments, concerns or questions about this new fee must be submitted by June 30, 2010.

ADDRESSES: Submit written comments, concerns or questions about the new fee for cabin rentals to Grand Mesa, Uncompahgre and Gunnison National Forests, Attn: Cabin Rental Program, 2250 Highway 50, Delta, Colorado 81416.

FOR FURTHER INFORMATION CONTACT: Kathy Peckham, Norwood Recreation Staff Officer, 970–327–4261 for the Matterhorn and Lone Cone Stations; or Leigh Ann Hunt, Forest Archaeologist, 970–874–6691 for the Alpine Guard Station.

SUPPLEMENTARY INFORMATION: The Federal Lands Recreation Enhancement Act (Title VIII, Pub. L. 108–447) directed the Secretary of Agriculture to publish a six-month advance notice in the **Federal Register** whenever new recreation fees are established. The intent of this notice is to give the public an opportunity to comment if they have concerns or questions about new fees.

This is an addition to the GMUG National Forest's existing cabin rental program. Other cabin rentals on the GMUG and other National Forests in Colorado are often fully booked throughout the rental season. The GMUG National Forest proposes to rent the cabins for $100 to $350 a night, but will conduct a market analysis to determine if the fees are both reasonable and acceptable for this unique recreation experience. People wanting to rent the cabins will need to make advance reservations through the National Recreation Reservation Service at *http://www.Recreation.gov* or by calling 1–877–444–6777. The National Recreation Reservation Service charges a fee for reservations.

Dated: January 4, 2010.

Corey P. Wong,

Staff Officer, Public Service.

[FR Doc. 2010–215 Filed 1–8–10; 8:45 am]

BILLING CODE 3410–11–P

DEPARTMENT OF COMMERCE

International Trade Administration

Antidumping or Countervailing Duty Order, Finding, or Suspended Investigation; Opportunity To Request Administrative Review

AGENCY: Import Administration, International Trade Administration, Department of Commerce.

FOR FURTHER INFORMATION CONTACT: Sheila E. Forbes, Office of AD/CVD Operations, Customs Unit, Import Administration, International Trade Administration, U.S. Department of Commerce, 14th Street and Constitution Avenue, NW, Washington, DC 20230, telephone: (202) 482–4697.

SUPPLEMENTARY INFORMATION:

Background

Each year during the anniversary month of the publication of an antidumping or countervailing duty order, finding, or suspension of investigation, an interested party, as defined in section 771(9) of the Tariff Act of 1930, as amended ("the Act"), may request, in accordance with section 351.213 of the Department of Commerce ("the Department") Regulations, that the Department conduct an administrative review of that antidumping or countervailing duty order, finding, or suspended investigation.

Respondent Selection

In the event the Department limits the number of respondents for individual examination for administrative reviews initiated pursuant to requests made for the orders identified below, except for the review of the antidumping duty order on Wooden Bedroom Furniture from the People's Republic of China (A–570–890), the Department intends to select respondents based on U.S. Customs and Border Protection ("CBP") data for U.S. imports during the period of review ("POR").[1] We intend to release the CBP data under Administrative Protective Order ("APO") to all parties having an APO within five days of publication of the initiation notice and to make our decision regarding respondent selection within 20 days of publication of the initiation **Federal Register** notice. Therefore, we encourage all parties interested in commenting on respondent selection to submit their APO applications on the date of publication of the initiation notice, or as soon thereafter as possible. The Department invites comments regarding the CBP data and respondent selection within 10 calendar days of publication of the **Federal Register** initiation notice.

If the Department limits the number of respondents selected for individual examination in the administrative review of the antidumping duty order on wooden bedroom furniture from the People's Republic of China (A–570–

[1] If the Department limits the number of respondents selected for individual examination in the administrative review of the antidumping duty order on Wooden Bedroom Furniture from the People's Republic of China ("PRC") (A-570-890), it intends to select respondents based on responses to quantity and value questionnaires sent to all companies for which the Department initiates a review.

890), it intends to select respondents based on volume data contained in responses to quantity and value questionnaires. Further, the Department intends to limit the number of quantity and value questionnaires issued in the wooden bedroom furniture review based on CBP data for U.S. imports classified under the Harmonized Tariff Schedule of the United States ("HTSUS") headings identified in the scope of the order. Since the units used to measure import quantities are not consistent for the HTSUS headings identified in the scope of the order on wooden bedroom furniture from the People's Republic of China, the Department will limit the number of quantity and value questionnaires issued based on the import values in CBP data as a proxy for import quantities. Parties subject to the review to which the Department does not send a quantity and value questionnaire may file a response to the quantity and value questionnaire by the applicable deadline if they desire to be included in the pool of companies from which the Department will select mandatory respondents. Additionally, exporters subject to the review to which the Department does not send a quantity and value questionnaire may file a separate rate application or separate rate certification, as appropriate, by the applicable deadline without filing a response to the quantity and value questionnaire.

OPPORTUNITY TO REQUEST A REVIEW:

Not later than the last day of January 2010,[2] interested parties may request administrative review of the following orders, findings, or suspended investigations, with anniversary dates in January for the following periods:

Antidumping Duty Proceedings	Period
BRAZIL: Prestressed Concrete Steel Wire Strand.	
A–351–837	1/1/09 - 12/31/09
INDIA: Prestressed Concrete Steel Wire Strand.	
A–533–828	1/1/09 - 12/31/09
MEXICO: Prestressed Concrete Steel Wire Strand.	
A–201–831	1/1/09 - 12/31/09
SOUTH AFRICA: Ferrovanadium.	
A–791–815	1/1/09 - 12/31/09
SOUTH KOREA: Prestressed Concrete Steel Wire Strand.	
A–580–852	1/1/09 - 12/31/09
SOUTH KOREA: Top–of-the Stove Stainless Steel Cooking Ware.	
A–580–601	1/1/09 - 12/31/09
THAILAND: Prestressed Concrete Steel Wire Strand.	
A–549–820	1/1/09 - 12/31/09
THE PEOPLE'S REPUBLIC OF CHINA: Crepe Paper Products.	
A–570–895	1/1/09 - 12/31/09
THE PEOPLE'S REPUBLIC OF CHINA: Ferrovanadium.	
A–570–873	1/1/09 - 12/31/09
THE PEOPLE'S REPUBLIC OF CHINA: Folding Gift Boxes.	
A–570–866	1/1/09 - 12/31/09
THE PEOPLE'S REPUBLIC OF CHINA: Potassium Permanganate.	
A–570–001	1/1/09 - 12/31/09
THE PEOPLE'S REPUBLIC OF CHINA: Wooden Bedroom Furniture.	
A–570–890	1/1/09 - 12/31/09
Countervailing Duty Proceedings.	
SOUTH KOREA: Top–of-the–Stove Stainless Steel Cooking Ware.	
C–580–602	1/1/09 - 12/31/09
Suspension Agreements.	
MEXICO: Fresh Tomatoes.	
A–201–820	1/1/09 - 12/31/09
RUSSIA: Certain Cut–to-Length Carbon Steel Plate.	
A–821–808	1/1/09 - 12/31/09

In accordance with 19 CFR 351.213(b), an interested party as defined by section 771(9) of the Act may request in writing that the Secretary conduct an administrative review. For both antidumping and countervailing duty reviews, the interested party must specify the individual producers or exporters covered by an antidumping finding or an antidumping or countervailing duty order or suspension agreement for which it is requesting a review. In addition, a domestic interested party or an interested party described in section 771(9)(B) of the Act must state why it desires the Secretary to review those particular producers or exporters.[3] If the interested party intends for the Secretary to review sales of merchandise by an exporter (or a producer if that producer also exports merchandise from other suppliers) which were produced in more than one country of origin and each country of origin is subject to a separate order, then the interested party must state specifically, on an order–by-order basis, which exporter(s) the request is intended to cover.

Please note that, for any party the Department was unable to locate in prior segments, the Department will not accept a request for an administrative review of that party absent new information as to the party's location. Moreover, if the interested party who files a request for review is unable to locate the producer or exporter for which it requested the review, the interested party must provide an explanation of the attempts it made to

[2] Or the next business day, if the deadline falls on a weekend, federal holiday or any other day when the Department is closed.

[3] If the review request involves a non-market economy and the parties subject to the review request do not qualify for separate rates, all other exporters of subject merchandise from the non-market economy country who do not have a separate rate will be covered by the review as part of the single entity of which the named firms are a part.

locate the producer or exporter at the same time it files its request for review, in order for the Secretary to determine if the interested party's attempts were reasonable, pursuant to section 351.303(f)(3)(ii) of the regulations.

As explained in *Antidumping and Countervailing Duty Proceedings: Assessment of Antidumping Duties*, 68 FR 23954 (May 6, 2003), the Department has clarified its practice with respect to the collection of final antidumping duties on imports of merchandise where intermediate firms are involved. The public should be aware of this clarification in determining whether to request an administrative review of merchandise subject to antidumping findings and orders. *See also* the Import Administration web site at http://ia.ita.doc.gov.

Six copies of the request should be submitted to the Assistant Secretary for Import Administration, International Trade Administration, Room 1870, U.S. Department of Commerce, 14th Street and Constitution Avenue, NW, Washington, DC 20230. The Department also asks parties to serve a copy of their requests to the Office of Antidumping/Countervailing Operations, Attention: Sheila Forbes, in room 3065 of the main Commerce Building. Further, in accordance with section 351.303(f)(l)(i), a copy of each request must be served on every party on the Department's service list.

The Department will publish in the **Federal Register** a notice of "Initiation of Administrative Review of Antidumping or Countervailing Duty Order, Finding, or Suspended Investigation" for requests received by the last day of January 2010. If the Department does not receive, by the last day of January 2010, a request for review of entries covered by an order, finding, or suspended investigation listed in this notice and for the period identified above, the Department will instruct the CBP to assess antidumping or countervailing duties on those entries at a rate equal to the cash deposit of (or bond for) estimated antidumping or countervailing duties required on those entries at the time of entry, or withdrawal from warehouse, for consumption and to continue to collect the cash deposit previously ordered.

For the first administrative review of any order, there will be no assessment of antidumping or countervailing duties on entries of subject merchandise entered, or withdrawn from warehouse, for consumption during the relevant provisional–measures "gap" period, of the order, if such a gap period is applicable to the POR.

This notice is not required by statute but is published as a service to the international trading community.

Dated: January 5, 2010.

John M. Andersen,

Acting Deputy Assistant Secretary for Antidumping and Countervailing Duty Operations.

[FR Doc. 2010–276 Filed 1–8–04; 8:45 am]

BILLING CODE 3510–DS–S

DEPARTMENT OF COMMERCE

International Trade Administration

[Application No. 88–11A16]

Export Trade Certificate Of Review

ACTION: Notice of issuance (#88–11A16) of an amended Export Trade Certificate of Review to Wood Machinery Manufacturers of America.

SUMMARY: The U.S. Department of Commerce issued an amended Export Trade Certificate of Review to Wood Machinery Manufacturers of America ("WMMA") on December 24, 2009. The Certificate has been amended ten times. The previous amendment was issued to WMMA on July 9, 2008, and published in the **Federal Register** July 17, 2008 (73 FR 41032). The original Export Trade Certificate of Review No. 88–00016 was issued to WMMA on February 3, 1989, and published in the **Federal Register** on February 9, 1989 (54 FR 6312).

FOR FURTHER INFORMATION CONTACT: Joseph E. Flynn, Director, Office of Competition and Economic Analysis, International Trade Administration, by telephone at (202) 482–5131 (this is not a toll-free number) or by e-mail at *oetca@ita.doc.gov.*

SUPPLEMENTARY INFORMATION: Title III of the Export Trading Company Act of 1982 (15 U.S.C. Sections 4001–21) authorizes the Secretary of Commerce to issue Export Trade Certificates of Review. The regulations implementing Title III are found at 15 CFR Part 325 (2008).

The Office of Competition and Economic Analysis is issuing this notice pursuant to 15 CFR 325.6(b), which requires the Department of Commerce to publish a summary of the certification in the **Federal Register**. Under Section 305(a) of the Act and 15 CFR 325.11(a), any person aggrieved by the Secretary's determination may, within 30 days of the date of this notice, bring an action in any appropriate district court of the United States to set aside the determination on the ground that the determination is erroneous.

Description of Amended Certificate:

WMMA's Export Trade Certificate of Review has been amended to:

1. Add the following company as a new Member of the Certificate within the meaning of section 325.2(1) of the Regulations (15 CFR 325.(1)):

Saw Trax Mfg., Inc., Kennesaw, GA, and

2. Delete the following company as a Member of the Certificate:

James L. Taylor Manufacturing Company, Poughkeepsie, NY.

The effective date of the amended certificate is September 25, 2009, the date on which WMMA's application to amend was deemed submitted. A copy of the amended certificate will be kept in the International Trade Administration's Freedom of Information Records Inspection Facility, Room 4001, U.S. Department of Commerce, 14th Street and Constitution Avenue, NW., Washington, DC 20230.

January 6, 2010.

Joseph E. Flynn,

Director, Office of Competition and Economic Analysis.

[FR Doc. 2010–277 Filed 1–8–10; 8:45 am]

BILLING CODE 3510–DR–P

DEPARTMENT OF COMMERCE

International Trade Administration

[A–583–008]

Circular Welded Carbon Steel Pipes and Tubes from Taiwan; Extension of Time Limit for Preliminary Results of Antidumping Duty Administrative Review

AGENCY: Import Administration, International Trade Administration, Department of Commerce.

FOR FURTHER INFORMATION CONTACT: Steve Bezirganian or Robert James, AD/CVD Operations, Office 7, Import Administration, International Trade Administration, U.S. Department of Commerce, 14th Street and Constitution Avenue NW, Washington, DC 20230; telephone: (202) 482–1131 or (202) 482–0649, respectively.

SUPPLEMENTARY INFORMATION:

Background

On June 1, 2009, the Department of Commerce (the Department) received a timely request from interested party Wheatland Tube Company (petitioner) to conduct an administrative review of the antidumping duty order on circular welded carbon steel pipes and tubes from Taiwan.[1] On June 24, 2009, the

[1] Because the last day of the anniversary month of this order, May 31, 2009, fell on a Sunday,

Continued

Department published a notice of initiation of this administrative review, covering the period of May 1, 2008 to April 30, 2009. The respondent is Yieh Phui Enterprise Co., Ltd. *See Initiation of Antidumping and Countervailing Duty Administrative Reviews and Requests for Revocation in Part*, 74 FR 30052 (June 24, 2009). The current deadline for the preliminary results of this review is January 31, 2010.

Extension of Time Limits for Preliminary Results

Section 751(a)(3)(A) of the Tariff Act of 1930, as amended (the Act), requires the Department to complete the preliminary results of an administrative review within 245 days after the last day of the anniversary month of an order for which a review is requested. However, if it is not practicable to complete the review within this time period, section 751(a)(3)(A) of the Act allows the Department to extend the time limit for the preliminary results to a maximum of 365 days after the last day of the anniversary month of an order for which a review is requested.

The Department finds it is not practicable to complete the preliminary results of this review within the original time frame because we require additional time to obtain information from the respondent and to analyze various complicated issues involving, for example, respondent's reporting of product characteristics and its cost allocation methodologies. Accordingly, the Department is extending the time limit for completion of the preliminary results of this administrative review until no later than May 31, 2010, which is 365 days from the last day of the anniversary month. As this date falls on a federal holiday, the preliminary results are due June 1, 2010. *See Notice of Clarification: Application of "Next Business Day" Rule for Administrative Determination Deadlines Pursuant to the Tariff Act of 1930, As Amended*, 70 FR 24533 (May 10, 2005). We intend to issue the final results no later than 120 days after publication of the preliminary results notice.

This extension is issued and published in accordance with sections 751(a)(3)(A) and 777(i) of the Act.

Dated: January 5, 2010.

John M. Andersen,

Acting Deputy Assistant Secretary for Antidumping and Countervailing Duty Operations.

[FR Doc. 2010–278 Filed 1–8–10; 8:45 am]

BILLING CODE 3510–DS–S

petitioner was able to file its request for review on the next business day, Monday, June 1, 2009.

DEPARTMENT OF COMMERCE

International Trade Administration

[A–570–905]

First Administrative Review of Certain Polyester Staple Fiber From the People's Republic of China: Final Results of Antidumping Duty Administrative Review

AGENCY: Import Administration, International Trade Administration, Department of Commerce.

SUMMARY: On July 7, 2009, the Department of Commerce ("Department") published in the **Federal Register** the preliminary results of the first administrative review of the antidumping duty order on certain polyester staple fiber ("PSF") from the People's Republic of China ("PRC"). *See Certain Polyester Staple Fiber from the People's Republic of China: Notice of Preliminary Results of the Antidumping Duty Administrative Review and Extension of Time Limit for the Final Results,* 74 FR 32125 (July 7, 2009) ("*Preliminary Results*"). The period of review ("POR") is from December 26, 2006, through May 31, 2008, for 27 companies.[1]

We gave interested parties an opportunity to comment on the *Preliminary Results.* Based upon our analysis of the comments and information received, we made changes to the dumping margin calculations for the final results. *See* Memorandum to the File from Emeka Chukwudebe, Case Analyst, through Alex Villanueva, Program Manager, Final Results Analysis for Ningbo Dafa Chemical Fiber Co., Ltd. ("Ningbo Dafa") (December 11, 2009); and Memorandum to the File from Emeka Chukwudebe, Case Analyst, through Alex Villanueva, Program Manager, Final Results Analysis for Cixi Santai Chemical Fiber Co., Ltd. ("Santai") (December 11, 2009). The final dumping margins are listed below in the section entitled "Final Results of Review."

DATES: *Effective Date:* January 11, 2010.

FOR FURTHER INFORMATION CONTACT: Emeka Chukwudebe (Ningbo Dafa), or Alexis Polovina (Santai) AD/CVD Operations, Office 9, Import Administration, International Trade Administration, U.S. Department of Commerce, 14th Street and Constitution Avenue, NW., Washington, DC 20230; telephone: (202) 482–0219 and (202) 482–3927, respectively.

SUPPLEMENTARY INFORMATION:

Background

As noted above, on July 7, 2009, the Department published the *Preliminary Results* of this administrative review where we also extended the deadline for the final results by 60 days. *See Preliminary Results.* On July 27, 2009, Ningbo Dafa submitted additional surrogate value information. On October 20, 2009, Petitioners[2] and Respondents submitted case briefs. On October 26, 2009, Petitioners and Respondents submitted rebuttal briefs.

Scope of the Order

The merchandise subject to this proceeding is synthetic staple fibers, not carded, combed or otherwise processed for spinning, of polyesters measuring 3.3 decitex (3 denier, inclusive) or more in diameter. This merchandise is cut to lengths varying from one inch (25 mm) to five inches (127 mm). The subject merchandise may be coated, usually with silicon or other finish, or not coated. PSF is generally used as stuffing in sleeping bags, mattresses, ski jackets, comforters, cushions, pillows, and furniture.

The following products are excluded from the scope: (1) PSF of less than 3.3 decitex (less than 3 denier) currently classifiable in the Harmonized Tariff Schedule of the United States ("HTSUS") at subheading 5503.20.0025 and known to the industry as PSF for spinning and generally used in woven and knit applications to produce textile and apparel products; (2) PSF of 10 to 18 denier that are cut to lengths of 6 to 8 inches and that are generally used in the manufacture of carpeting; and (3) low-melt PSF defined as a bi-component fiber with an outer, non-polyester sheath that melts at a significantly lower temperature than its inner polyester core (classified at HTSUS 5503.20.0015).

Certain PSF is classifiable under the HTSUS subheadings 5503.20.0045 and

[1] Those companies are: Far Eastern Industries, Ltd., (Shanghai) and Far Eastern Polychem Industries; Ningbo Dafa Chemical Fiber Co., Ltd.; Cixi Sansheng Chemical Fiber Co., Ltd.; Cixi Santai Chemical Fiber Co., Ltd.; Cixi Waysun Chemical Fiber Co., Ltd.; Hangzhou Best Chemical Fibre Co., Ltd.; Hangzhou Hanbang Chemical Fibre Co., Ltd.; Hangzhou Huachuang Co., Ltd.; Hangzhou Sanxin Paper Co., Ltd.; Hangzhou Taifu Textile Fiber Co., Ltd.; Jiaxing Fuda Chemical Fibre Factory; Nantong Loulai Chemical Fiber Co., Ltd.; Nanyang Textile Co., Ltd.; Suzhou PolyFiber Co., Ltd.; Xiamen Xianglu Chemical Fiber Co.; Zhaoqing Tifo New Fiber Co., Ltd.; Zhejiang Anshun Pettechs Fibre Co., Ltd.; Zhejiang Waysun Chemical Fiber Co., Ltd.; Dragon Max Trading Development; Xiake Color Spinning Co., Ltd.; Jiangyin Hailun Chemical Fiber Co., Ltd.; Hyosung Singapore PTE Ltd.; Jiangyin Changlong Chemical Fiber Co., Ltd.; Ma Ha Company, Ltd.; Jiangyin Huahong Chemical Fiber Co., Ltd.; Jiangyin Mighty Chemical Fiber Co., Ltd.; and Huvis Sichuan.

[2] DAK Americas LLC and Nan Ya Plastics Corporation America.

5503.20.0065. Although the HTSUS subheadings are provided for convenience and customs purposes, the written description of the merchandise under the orders is dispositive.

Verification

Pursuant to section 351.307(b)(iv) of the Department's regulations, we conducted verifications of respondents' questionnaire responses.[3]

Analysis of Comments Received

All issues raised in the case and rebuttal briefs by parties to these reviews are addressed in the "First Antidumping Administrative Review of Certain Polyester Staple Fiber from the People's Republic of China: Issues and Decision Memorandum for the Final Results," ("Decision Memo"), which is hereby adopted by this notice. A list of the issues which parties raised and to which we respond in the Decision Memo is attached to this notice as an Appendix. The Decision Memo is a public document and is on file in the Central Records Unit ("CRU"), Main Commerce Building, Room 1117, and is accessible on the Department's Web site at *http://www.trade.gov/ia.* The paper copy and electronic version of the memorandum are identical in content.

Separate Rates

In the *Preliminary Results,* we determined that the following companies met the criteria for separate rate status: Far Eastern Industries, Ltd., (Shanghai) and Far Eastern Polychem Industries; Cixi Sansheng Chemical Fiber Co., Ltd.; Cixi Waysun Chemical Fiber Co. Ltd., Hangzhou Best Chemical Fibre Co., Ltd.; Hangzhou Hanbang Chemical Fibre Co., Ltd.; Hangzhou Huachuang Co., Ltd.; Hangzhou Sanxin Paper Co., Ltd.; Hangzhou Taifu Textile Fiber Co., Ltd.; Jiaxing Fuda Chemical Fibre Factory; Nantong Loulai Chemical Fiber Co., Ltd.; Nanyang Textile Co., Ltd.; Xiamen Xianglu Chemical Fiber Co.; Zhaoqing Tifo New Fiber Co., Ltd.; Zhejiang Anshun Pettechs Fibre Co., Ltd.; and Zhejiang Waysun Chemical Fiber Co., Ltd. We received no comments on the Department's preliminary finding that these companies qualify for a separate rate. Therefore, for the final results, these companies will continue to receive the separate rate.

In the *Preliminary Results,* we stated that the following 10 companies did not submit either a separate-rate application or certification: Dragon Max Trading Development; Xiake Color Spinning Co., Ltd.; Jiangyin Hailun Chemical Fiber Co., Ltd.; Hyosung Singapore PTE Ltd.; Jiangyin Changlong Chemical Fiber Co., Ltd.; Ma Ha Company, Ltd.; Jiangyin Huahong Chemical Fiber Co., Ltd.; Jiangyin Mighty Chemical Fiber Co., Ltd.; Huvis Sichuan; and Suzhou PolyFiber Co., Ltd. We received no comments on the Department's preliminary finding that these 10 companies do not qualify for a separate rate. Therefore, for the final results, these companies will remain part of the PRC-wide entity and subject to the PRC-wide entity rate.

Changes Since the Preliminary Results

Based on a review of the record as well as comments received from parties regarding our *Preliminary Results,* we have made revisions to the margin calculation for Ningbo Dafa and Santai in the final results. Specifically, we have updated the surrogate value for steam coal. *See* Decision Memo at Comment 1a. For all changes to the calculations of Ningbo Dafa and Santai, *see* the Decision Memo and company specific analysis memoranda.

Final Results of Review

The weighted-average dumping margins for the POR are as follows:

CERTAIN POLYESTER STAPLE FIBER FROM THE PEOPLE'S REPUBLIC OF CHINA

Manufacturer/exporter	Weighted average margin (percent)
Ningbo Dafa Chemical Fiber Co., Ltd	0.00
Cixi Santai Chemical Fiber Co	* 0.02
Far Eastern Polychem Industries	4.44
Cixi Sansheng Chemical Fiber Co., Ltd	4.44
Cixi Waysun Chemical Fiber Co. Ltd	4.44
Hangzhou Best Chemical Fibre Co., Ltd	4.44
Hangzhou Hanbang Chemical Fibre Co., Ltd	4.44
Hangzhou Huachuang Co., Ltd	4.44
Hangzhou Sanxin Paper Co., Ltd	4.44
Hangzhou Taifu Textile Fiber Co., Ltd	4.44
Jiaxing Fuda Chemical Fibre Factory	4.44
Nantong Loulai Chemical Fiber Co., Ltd	4.44
Nanyang Textile Co., Ltd	4.44
Xiamen Xianglu Chemical Fiber Co	4.44
Zhaoqing Tifo New Fiber Co., Ltd	4.44
Zhejiang Anshun Pettechs Fibre Co., Ltd	4.44
Zhejiang Waysun Chemical Fiber Co., Ltd	4.44
PRC-Wide Rate	44.30

* *De minimis.*

[3] Between August 31, 2009, and September 4, 2009, we conducted a verification of Santai. *See* "Memorandum to the File through Alex Villanueva, Program Manager, Office 9, from Alexis Polovina, Case Analyst, Office 9, and Emeka Chukwudebe, Case Analyst, Office 9, re: Verification of the Sales and Processing Response of Cixi Santai Chemical Fiber Co., Ltd. in the Antidumping Administrative Review of Certain Polyester from the People's Republic of China," dated October 7, 2009. Between September 5, 2009, and September 11, 2009, we conducted a verification of Ningbo Dafa. *See* "Memorandum to the File through Alex Villanueva, Program Manager, Office 9, from Emeka Chukwudebe, Case Analyst, Office 9, and Alexis Polovina, Case Analyst, Office 9, re: Verification of the Sales and Factors Response of Ningbo Dafa Chemical Fiber Co., Ltd. ("Ningbo Dafa") in the Antidumping First Administrative Review of Certain Polyester Staple Fiber ("PSF") from the People's Republic of China ("China")," dated October 8, 2009.

Assessment Rates

Upon issuance of these final results, the Department will determine, and U.S. Customs and Border Protection ("CBP") shall assess, antidumping duties on all appropriate entries covered by these reviews. The Department intends to issue assessment instructions to CBP 15 days after the publication date of the final results of this review. Furthermore, we will instruct CBP to liquidate entries for all companies at the company-specific rate required at the time of entry. In accordance with 751(a)(2)(A) of the Tariff Act of 1930 ("Act") and 19 CFR 351.212(b)(1), we calculated importer (or customer)-specific assessment rates for the merchandise subject to this review. Where the respondent has reported reliable entered values, we calculated importer (or customer)-specific ad valorem rates by aggregating the dumping margins calculated for all U.S. sales to each importer (or customer) and dividing this amount by the total entered value of the sales to each importer (or customer). *See* 19 CFR 351.212(b)(1). Where an importer (or customer)-specific ad valorem rate is greater than *de minimis,* we will apply the assessment rate to the entered value of the importers'/customers' entries during the POR. *Id.*

For the companies receiving a separate rate that were not selected for individual review, the assessment rate will be based on the rate from the investigation pursuant to section 735(c)(5)(B) of the Act.

Cash Deposit Requirements

The following cash deposit requirements will be effective upon publication of these final results of administrative review for all shipments of the subject merchandise entered, or withdrawn from warehouse, for consumption on or after the publication date, as provided for by section 751(a)(2)(C) of the Act: (1) For the exporters listed above, the cash deposit rate will be established in the final results of this review (except, if the rate is zero or *de minimis, i.e.,* less than 0.5 percent, no cash deposit will be required for that company); (2) for previously investigated PRC and non-PRC exporters not listed above that have separate rates, the cash deposit rate will continue to be the exporter-specific rate published for the most recent period; (3) for all PRC exporters of subject merchandise which have not been found to be entitled to a separate rate, the cash deposit rate will be the PRC-wide rate of 44.30 percent; and (4) for all non-PRC exporters of subject merchandise which have not received their own rate, the cash deposit rate will be the rate applicable to the PRC exporters that supplied that non-PRC exporter. These deposit requirements, when imposed, shall remain in effect until further notice.

Reimbursement of Duties

This notice also serves as a final reminder to importers of their responsibility under 19 CFR 351.402(f) to file a certificate regarding the reimbursement of antidumping duties prior to liquidation of the relevant entries during this POR. Failure to comply with this requirement could result in the Department's presumption that reimbursement of antidumping duties has occurred and the subsequent assessment of doubled antidumping duties.

Administrative Protective Orders

This notice also serves as a reminder to parties subject to administrative protective orders ("APO") of their responsibility concerning the return or destruction of proprietary information disclosed under APO in accordance with 19 CFR 351.305, which continues to govern business proprietary information in this segment of the proceeding. Timely written notification of the return/destruction of APO materials or conversion to judicial protective order is hereby requested. Failure to comply with the regulations and terms of an APO is a violation which is subject to sanction.

We are issuing and publishing this administrative review and notice in accordance with sections 751(a)(1) and 777(i) of the Act.

Dated: January 4, 2010.

Ronald K. Lorentzen,

Deputy Assistant Secretary for Import Administration.

Appendix I—Decision Memorandum

General Issues

Comment 1: Surrogate Values.
A. Steam Coal.
B. Labor.
Comment 2: Separate Rate.
Comment 3: Liquidation of Certain Entries.

Company-Specific Issues

Ningbo Dafa

Comment 4: Negotiation Files for Purchases of Bottle Flakes and Sales of PSF.
Comment 5: Invoice Numbering System.
Jianxin Fuda Chemical Fibre Factory.
Comment 6: Correction of Name in **Federal Register** Notice.

[FR Doc. 2010–275 Filed 1–6–10; 8:45 am]

BILLING CODE P

DEPARTMENT OF COMMERCE

National Telecommunications and Information Administration

Online Safety and Technology Working Group Meeting

AGENCY: National Telecommunications and Information Administration, U.S. Department of Commerce.

ACTION: Notice of Public Meeting.

SUMMARY: This notice announces a public meeting of the Online Safety and Technology Working Group (OSTWG).

DATES: The meeting will be held on February 4, 2010, from 8:40 a.m. to 5:00 p.m., Eastern Standard Time.

ADDRESSES: The meeting will be held at the United States Department of Commerce, 1401 Constitution Avenue, NW, Room 4830, Washington, DC 20230.

FOR FURTHER INFORMATION CONTACT: Joe Gattuso at (202) 482–0977 or jgattuso@ntia.doc.gov; and/or visit NTIA's web site at www.ntia.doc.gov.

SUPPLEMENTARY INFORMATION:

Background: NTIA established the OSTWG pursuant to Section 214 of the Protecting Children in the 21st Century Act (Act). The OSTWG is composed of representatives of relevant sectors of the business community, public interest groups, and other appropriate groups and Federal agencies. The members were selected for their expertise and experience in online safety issues, as well as their ability to represent the views of the various industry stakeholders.

According to the Act, the OSTWG is tasked with evaluating industry efforts to promote a safe online environment for children. The Act requires the OSTWG to report its findings and recommendations to the Assistant Secretary for Communications and Information and to Congress within one (1) year after its first meeting.

Matters to Be Considered: The OSTWG will hear presentations and have discussions on online safety and technology, with an emphasis on issues relevant to the work of the subcommittees on data retention and child pornography reporting.

Time and Date: The meeting will be held on February 4, 2010, from 8:40 a.m. to 5:00 p.m., Eastern Standard Time. The times and the agenda topics are subject to change. The meeting may be webcast. Please refer to NTIA's web site, http://www.ntia.doc.gov, for the most up-to-date meeting agenda and webcast information.

Place: The meeting will be held at the United States Department of Commerce,

1401 Constitution Avenue, NW, Room 4830, Washington, DC 20230. The meeting will be open to the public and press on a first-come, first-served basis. Space is limited. Attendees should bring a photo ID and arrive early to clear security. The public meeting is physically accessible to people with disabilities. Individuals requiring accommodations, such as sign language interpretation or other ancillary aids, are asked to notify Mr. Gattuso at (202) 482–0977 or jgattuso@ntia.doc.gov, at least five (5) business days before the meeting.

Dated: January 6, 2010.

Kathy D. Smith,

Chief Counsel, National Telecommunications and Information Administration.

[FR Doc. 2010–232 Filed 1–8–10; 8:45 am]

BILLING CODE 3510–60–S

DEPARTMENT OF COMMERCE

Bureau of Industry and Security

Sensors and Instrumentation Technical Advisory Committee; Notice of Partially Closed Meeting

The Sensors and Instrumentation Technical Advisory Committee (SITAC) will meet on January 26, 2010, 9:30 a.m., in the Herbert C. Hoover Building, Room 3884, 14th Street between Constitution and Pennsylvania Avenues, NW., Washington, DC. The Committee advises the Office of the Assistant Secretary for Export Administration on technical questions that affect the level of export controls applicable to sensors and instrumentation equipment and technology.

Agenda

Public Session

1. Welcome and Introductions.
2. Remarks from the Bureau of Industry and Security Management.
3. Industry Presentations.
4. New Business.

Closed Session

5. Discussion of matters determined to be exempt from the provisions relating to public meetings found in 5 U.S.C. app. 2 10(a)(1) and 10(a)(3).

The open session will be accessible via teleconference to 20 participants on a first come, first serve basis. To join the conference, submit inquiries to Ms. Yvette Springer at *Yspringer@bis.doc.gov* no later than January 19, 2010.

A limited number of seats will be available during the public session of the meeting. Reservations are not accepted. To the extent that time permits, members of the public may present oral statements to the Committee. The public may submit written statements at any time before or after the meeting. However, to facilitate distribution of public presentation materials to the Committee members, the Committee suggests that the materials be forwarded before the meeting to Ms. Springer.

The Assistant Secretary for Administration, with the concurrence of the General Counsel, formally determined on September 29, 2009 pursuant to Section 10(d) of the Federal Advisory Committee Act, as amended (5 U.S.C. app. 2 10(d)), that the portion of this meeting dealing with pre-decisional changes to the Commerce Control List and U.S. export control policies shall be exempt from the provisions relating to public meetings found in 5 U.S.C. app. 2 10(a)(1) and 10(a)(3). The remaining portions of the meeting will be open to the public.

For more information contact Yvette Springer on (202) 482–2813.

Dated: January 6, 2010.

Yvette Springer,

Committee Liaison Officer.

[FR Doc. 2010–280 Filed 1–8–10; 8:45 am]

BILLING CODE 3510–JT–P

DEPARTMENT OF COMMERCE

Bureau of Industry and Security

Information Systems Technical Advisory Committee; Notice of Partially Closed Meeting

The Information Systems Technical Advisory Committee (ISTAC) will meet on January 27 and 28, 2010, 9 a.m., at the Space and Naval Warfare Systems Center (SPAWAR), Building 33, Cloud Room, 53560 Hull Street, San Diego, California 92152. The Committee advises the Office of the Assistant Secretary for Export Administration on technical questions that affect the level of export controls applicable to information systems equipment and technology.

Wednesday, January 27

Open Session

1. Welcome and Introduction.
2. Working Groups Reports.
3. Industry Presentations.
4. New Business.

Thursday, January 28

Closed Session

5. Discussion of matters determined to be exempt from the provisions relating to public meetings found in 5 U.S.C. app. 2 10(a)(1) and 10(a)(3).

The open session will be accessible via teleconference to 20 participants on a first come, first serve basis. To join the conference, submit inquiries to Ms. Yvette Springer at *Yspringer@bis.doc.gov,* no later than January 20, 2010.

A limited number of seats will be available for the public session. Reservations are not accepted. To the extent time permits, members of the public may present oral statements to the Committee. The public may submit written statements at any time before or after the meeting. However, to facilitate distribution of public presentation materials to Committee members, the Committee suggests that public presentation materials or comments be forwarded before the meeting to Ms. Springer.

The Assistant Secretary for Administration, with the concurrence of the delegate of the General Counsel, formally determined on December 23, 2009, pursuant to Section 10(d) of the Federal Advisory Committee Act, as amended (5 U.S.C. app. 2 (10)(d)), that the portion of the meeting concerning trade secrets and commercial or financial information deemed privileged or confidential as described in 5 U.S.C. 552b(c)(4) and the portion of the meeting concerning matters the disclosure of which would be likely to frustrate significantly implementation of an agency action as described in 5 U.S.C. 552b(c)(9)(B) shall be exempt from the provisions relating to public meetings found in 5 U.S.C. app. 2 10(a)(1) and 10(a)(3). The remaining portions of the meeting will be open to the public.

For more information, call Yvette Springer at (202) 482–2813.

Dated: January 6, 2010.

Yvette Springer,

Committee Liaison Officer.

[FR Doc. 2010–279 Filed 1–8–10; 8:45 am]

BILLING CODE 3510–JT–P

DEPARTMENT OF COMMERCE

International Trade Administration

[A–570–891]

Hand Trucks and Certain Parts Thereof from the People's Republic of China: Preliminary Results of Antidumping Duty Administrative Review and Rescission in Part

AGENCY: Import Administration, International Trade Administration, Department of Commerce.

DATES: *Effective Date:* January 11, 2010.

SUMMARY: The Department of Commerce (the Department) is currently conducting an administrative review of the antidumping duty order on hand trucks and certain parts thereof (hand trucks) from the People's Republic of China (PRC) covering the period December 1, 2007, through November 30, 2008. We preliminarily determine that sales made by Since Hardware (Guangzhou) Co., Ltd. (Since Hardware) were made below normal value (NV). We invite interested parties to comment on these preliminary results. In addition, we are also rescinding this administrative review with respect to New–Tec Integration (Xiamen) Co., Ltd. (New–Tec).

Parties who submit comments are requested to submit with each argument a statement of the issue and a summary of the argument.

FOR FURTHER INFORMATION CONTACT: Fred Baker or Robert James, AD/CVD Operations, Office 7, Import Administration, International Trade Administration, U.S. Department of Commerce, 14th Street and Constitution Avenue, NW, Washington, DC 20230; telephone: (202) 482–2924 or (202) 482–0649, respectively.

SUPPLEMENTARY INFORMATION:

Background

On December 2, 2004, the Department published in the **Federal Register** the antidumping duty order on hand trucks from the PRC. *See Notice of Antidumping Duty Order: Hand Trucks and Certain Parts Thereof From the People's Republic of China*, 69 FR 70122 (December 2, 2004). On December 1, 2008, the Department published in the **Federal Register** its notice of opportunity to request an administrative review of the antidumping duty order on hand trucks from the PRC. *See Antidumping or Countervailing Duty Order, Finding, or Suspended Investigation; Opportunity to Request Administrative Review*, 73 FR 72764 (December 1, 2008). On December 30, 2008, Gleason Industrial Products, Inc., and Precision Products, Inc. (Petitioners) requested that the Department conduct an administrative review of Since Hardware, New–Tec, Qingdao Huatian Hand Truck Co., Ltd. (Huatian), and True Potential Co., Ltd. (True Potential). On February 2, 2009, the Department published in the **Federal Register** a notice of initiation of the antidumping duty administrative review of hand trucks from the PRC for the period December 1, 2007, through November 30, 2008, with respect to the four companies named above. *See Initiation of Antidumping and Countervailing Duty Administrative Reviews and Request for Revocation in Part*, 74 FR 5821 (February 2, 2009) (*Initiation Notice*).

On March 4, 2009, New–Tec provided certification that it had not shipped to the United States any subject merchandise during the period of review (POR), and requested the Department rescind the review with respect to New–Tec. On April 21, 2009, Customs and Border Protection (CBP) posted the Department's no shipments inquiry with respect to New–Tec. *See* message number 9120201 dated April 21, 2009. The Department received no information in response to that inquiry, and found no evidence of shipments of subject merchandise to the United States by New–Tec during the POR. Therefore the Department published a notice of intent to rescind the review with respect to New–Tec on June 19, 2009. *See Notice of Partial Rescission, Intent to Rescind and Extension of Preliminary Results of Antidumping Duty Administrative Review: Hand Trucks and Certain Parts Thereof From the People's Republic of China*, 74 FR 29178 (June 19, 2009) (*Partial Rescission Notice*).

On May 1, 2009, Petitioners withdrew their requests for review of Huatian and True Potential. Because Petitioners were the only party that requested a review of Huatian and True Potential, the Department rescinded the review with respect to these companies on June 19, 2009. *See Partial Rescission Notice* at 29178.

We issued the standard antidumping duty questionnaire to Since Hardware on May 5, 2009, and received timely responses in June 2009. We issued supplemental questionnaires covering sections A, C, and D of the original questionnaire on July 7, 2009, September 18, 2009, November 6, 2009, and December 16, 2009, and received timely responses to those questionnaires.

Period of Review

The POR covers December 1, 2007, through November 30, 2008.

Scope of the Order

The merchandise subject to this antidumping duty order consists of hand trucks manufactured from any material, whether assembled or unassembled, complete or incomplete, suitable for any use, and certain parts thereof, namely the vertical frame, the handling area and the projecting edges or toe plate, and any combination thereof.

A complete or fully assembled hand truck is a hand–propelled barrow consisting of a vertically disposed frame having a handle or more than one handle at or near the upper section of the vertical frame; at least two wheels at or near the lower section of the vertical frame; and a horizontal projecting edge or edges, or toe plate, perpendicular or angled to the vertical frame, at or near the lower section of the vertical frame. The projecting edge or edges, or toe plate, slides under a load for purposes of lifting and/or moving the load.

That the vertical frame can be converted from a vertical setting to a horizontal setting, then operated in that horizontal setting as a platform, is not a basis for exclusion of the hand truck from the scope of this petition. That the vertical frame, handling area, wheels, projecting edges or other parts of the hand truck can be collapsed or folded is not a basis for exclusion of the hand truck from the scope of the petition. That other wheels may be connected to the vertical frame, handling area, projecting edges, or other parts of the hand truck, in addition to the two or more wheels located at or near the lower section of the vertical frame, is not a basis for exclusion of the hand truck from the scope of the petition. Finally, that the hand truck may exhibit physical characteristics in addition to the vertical frame, the handling area, the projecting edges or toe plate, and the two wheels at or near the lower section of the vertical frame, is not a basis for exclusion of the hand truck from the scope of the petition.

Examples of names commonly used to reference hand trucks are hand truck, convertible hand truck, appliance hand truck, cylinder hand truck, bag truck, dolly, or hand trolley. They are typically imported under heading 8716.80.50.10 of the Harmonized Tariff Schedule of the United States (HTSUS), although they may also be imported under heading 8716.80.50.90. Specific parts of a hand truck, namely the vertical frame, the handling area and the projecting edges or toe plate, or any combination thereof, are typically imported under heading 8716.90.50.60 of the HTSUS. Although the HTSUS subheadings are provided for convenience and customs purposes, the Department's written description of the scope is dispositive.

Excluded from the scope are small two–wheel or four–wheel utility carts specifically designed for carrying loads like personal bags or luggage in which the frame is made from telescoping tubular materials measuring less than 5/8 inch in diameter; hand trucks that use motorized operations either to move the hand truck from one location to the next

or to assist in the lifting of items placed on the hand truck; vertical carriers designed specifically to transport golf bags; and wheels and tires used in the manufacture of hand trucks.

Non–Market Economy Country Status

In every case conducted by the Department involving the PRC, we have treated the PRC as a non–market economy (NME) country. In accordance with section 771(18)(C)(i) of the Act, any determination that a foreign country is an NME country shall remain in effect until revoked by the administering authority. None of the parties to this proceeding have contested such treatment. Accordingly, we calculated NV in accordance with section 773(c) of the Act, which applies to NME countries.

Separate Rates Determination

A designation of a country as an NME remains in effect until it is revoked by the Department. *See* section 771(18)(C) of the Act. Accordingly, the Department applies a rebuttable presumption that all companies within the PRC are subject to government control, and thus should be assessed a single antidumping duty rate. It is the Department's policy to assign all exporters of the merchandise subject to review in NME countries a single rate unless an exporter can affirmatively demonstrate an absence of government control, both in law (*de jure*) and in fact (*de facto*), with respect to exports. To establish whether a company is sufficiently independent to be entitled to a separate, company–specific rate, the Department analyzes each exporting entity in an NME country under the test established in the *Final Determination of Sales at Less than Fair Value: Sparklers from the People's Republic of China*, 56 FR 20588 (May 6, 1991), (*Sparklers*) as amplified by the *Notice of Final Determination of Sales at Less Than Fair Value: Silicon Carbide from the People's Republic of China*, 59 FR 22585 (May 2, 1994) (*Silicon Carbide*).

Absence of De Jure Control

Evidence supporting, though not requiring, a finding of *de jure* absence of government control over export activities includes: (1) an absence of restrictive stipulations associated with the individual exporter's business and export licenses; (2) any legislative enactments decentralizing control of companies; and (3) any other formal measures by the government decentralizing control of companies. *See Sparklers*, 56 FR at 20589. In this administrative review, Since Hardware submitted a complete response to the separate rates section of the Department's questionnaire. *See* Since Hardware's June 5, 2009 submission at 5–6. The evidence submitted in the instant review by Since Hardware includes government laws and regulations on corporate ownership and control (*i.e.*, the Company Law and the Foreign Trade Law of the People's Republic of China), individual business licenses, and narrative information regarding the company's operations and selection of management. The evidence Since Hardware provided supports a preliminary finding of an absence of *de jure* government control over its export activities because: (1) there are no controls on exports of subject merchandise, such as quotas applied to, or licenses required for, exports of the subject merchandise to the United States; and (2) the government of the PRC has passed legislation decentralizing control of companies. *See* Since Hardware's June 5, 2009 submission at 5–6, and Exhibit 4 and its August 3, 2009 submission at 4 and Exhibit 7.

Absence of De Facto Control

The absence of *de facto* government control over exports generally is based on whether the respondent: (1) sets its own export prices independent of the government and other exporters; (2) retains the proceeds from its export sales and makes independent decisions regarding the disposition of profits or financing of losses; (3) has the authority to negotiate and sign contracts and other agreements; and (4) has autonomy from the government regarding the selection of management. *See Silicon Carbide*, 59 FR at 22586–87; *Sparklers*, 56 FR at 20589; and *Final Determination of Sales at Less Than Fair Value: Furfuryl Alcohol From the People's Republic of China*, 60 FR 22544, 22545 (May 8, 1995).

In its June 5, 2009, submission, Since Hardware submitted evidence demonstrating an absence of *de facto* government control over its export activities. Specifically, this evidence indicates: (1) the company sets its own export prices independent of the government and without the approval of a government authority; (2) the company retains the proceeds from its sales and makes independent decisions regarding the disposition of profits or financing of losses; (3) the company has a general manager with the authority to negotiate and bind the company in an agreement; (4) the general manager is selected by the company's board of shareholders, and the general manager appoints the company's management personnel; and (5) there is no restriction on the company's use of export revenues.

Therefore, in the absence of both *de jure* or *de facto* government control over Since Hardware's export activities, we preliminarily find that Since Hardware has established *prima facie* that it qualifies for a separate rate under the criteria established by *Silicon Carbide* and *Sparklers*.

Surrogate Country

When the Department investigates imports from an NME country, section 773(c)(1) of the Act directs it to base NV, in most circumstances, on the NME producer's factors of production (FOPs), valued in a surrogate market–economy country or countries considered to be appropriate by the Department. In accordance with section 773(c)(4) of the Act, in valuing the FOPs, the Department shall utilize, to the extent possible, the prices or costs of FOPs in one or more market–economy countries that are at a level of economic development comparable to that of the NME country and are significant producers of comparable merchandise. The sources of the surrogate values we have used in this administrative review are discussed under the "Normal Value" section, below. On February 24, 2009, the Department determined that India, the Philippines, Indonesia, Colombia, Thailand and Peru are countries comparable to the PRC in terms of economic development, and requested comments from interested parties on selecting the appropriate surrogate country for this review. *See* Letter to All Interested Parties, "Administrative Review of Hand Trucks and Certain Parts Thereof from the People's Republic of China: Surrogate Country List," dated March 2, 2009, at Attachment 1. No party submitted surrogate country selection comments.

The Department has examined the export levels[1] of subject merchandise from the above–mentioned countries and found that India, Indonesia, Thailand, Colombia, and the Philippines are significant producers of comparable merchandise. *See* Memorandum from Fred Baker, International Trade Compliance Analyst, to Richard Weible, Office Director, "Antidumping Duty Administrative Review of Hand Trucks and Certain Parts Thereof from the People's Republic of China: Selection of a Surrogate Country," dated concurrently with this notice (Surrogate

[1] The Department was unable to find world production data for subject merchandise and relied on export data as a substitute for overall production.

Country Memorandum) at 4. However, in selecting the appropriate surrogate country, the Department also examines the availability and reliability of data from the countries deemed to be economically comparable and significant producers of subject merchandise. For a description of our practice, *see* Department Policy Bulletin No. 04.1: Non–Market Economy Surrogate Country Selection Process (March 1, 2004). India has been the primary surrogate country in numerous past segments for this proceeding. In those past segments, the Department found India's import statistics to be an available and reliable source for surrogate values. *See* Surrogate Country Memorandum at 4.

Therefore, because India: (1) is a significant producer of comparable merchandise; (2) is at a similar level of economic development as the PRC; (3) has publicly available and reliable data, which the Department has previously relied upon for numerous segments of this proceeding, the Department has selected India as the primary surrogate country, pursuant to section 773(c)(4) of the Act. *See* Surrogate Country Memorandum at 5.

However, for the input "rubber wheels" the Department has been unable to locate a suitable surrogate value from India. The WTA data which we relied upon for the other direct inputs reported the quantity of rubber wheels on a per–piece basis, rather than a weight basis. Thus, because the size of the units involved as reported by WTA data could vary greatly, covering wheels with rims up to two feet in diameter, we do not consider a per–piece measurement a reliable source for valuation in this review. Therefore, we have selected the Philippines as the secondary surrogate country because it reported Philippine imports of rubber wheels on a weight basis. All of the other countries on the Department's list of potential surrogate countries either had no imports of rubber wheels or, like India, reported them on a per–piece basis.

Rescission in Part

As described above, on June 19, 2009, the Department published a notice of intent to rescind the administrative review of New–Tec because it had no shipments. We gave interested parties an opportunity to comment on this preliminary intent. *See Preliminary Rescission Notice* at 29179. We received no comments. There continues to be no record evidence to suggest New–Tec had shipments or entries of subject merchandise to the United States during the POR. Therefore, in accordance with 19 CFR 351.213(d)(3), we are rescinding the review with respect to New–Tec.

Fair Value Comparisons

To determine whether Since Hardware's sales of subject merchandise to the United States were made at a price below NV, we compared its U.S. price to NV, as described in the "U.S. Price" and "Normal Value" sections of this notice, below.

U.S. Price

We used invoice date as the date of sale because record evidence indicated the terms of Since Hardware's U.S. sales changed following the contract date. *See* Since Hardware's October 5, 2009 submission at 2–3 and 19 CFR 351.401(i). (The Department will normally use the invoice date as the date of sale.)

In accordance with section 772(a) of the Act, we based U.S. price on the export price (EP) of the sale to the United States by Since Hardware because the first sale to an unaffiliated party was made before the date of importation, and the use of constructed export price was not otherwise warranted. We calculated EP based on the free–on-board (FOB) price to the first unaffiliated purchaser in the United States. For this EP sale, we deducted foreign inland freight and foreign brokerage and handling from the starting price (or gross unit price), in accordance with section 772(c) of the Act. For Since Hardware's U.S. sale, each of these services was provided by an NME vendor. Thus, we based the deduction of these movement charges on surrogate values.

We valued truck freight expenses using a per–unit average rate calculated from data on the following website: *http://www.infobanc.com/logistics/logtruck.htm*. The logistics section of this website contains inland freight truck rates between many large Indian cities. We used data from this website for four months of the POR for which the website contained data. See Memorandum from Fred Baker, International Trade Compliance Analyst, through Robert James, Program Manager, to the File, "Administrative Review of Hand Trucks and Parts Thereof from the People's Republic of China: Surrogate Values for the Preliminary Results" (Surrogate Values Memorandum) at Exhibit 5.

We valued brokerage and handling using a simple average of the brokerage and handling costs reported in public submissions filed in three antidumping duty cases. Specifically, we averaged the public brokerage and handling expenses reported by Navneet Publications (India) Ltd. in the 2007–2008 administrative review of certain lined paper products from India, Essar Steel Limited in the 2006–2007 antidumping duty administrative review of hot–rolled carbon steel flat products from India, and Himalaya International Ltd. in the 2005–2006 administrative review of certain preserved mushrooms from India. The Department adjusted the average brokerage and handling rate for inflation. *See* Surrogate Value Memorandum at Exhibit 8.

Our surrogate values for truck freight and for brokerage and handling were in Indian rupees. Therefore, in accordance with section 773A(a) of the Act and 19 CFR 351.415, we converted them to U.S. dollars using the official exchange rate for India recorded on the date of sale of subject merchandise in this case. *See http://www.ia.ita.doc.gov/exchange/index.html*.

Normal Value

1. Methodology

Section 773(c)(1)(B) of the Act provides that the Department shall determine the NV using an FOP methodology if the merchandise is exported from an NME and the information does not permit the calculation of NV using home–market prices, third–country prices, or constructed value under section 773(a) of the Act. The Department bases NV on FOPs because the presence of government controls on various aspects of NMEs renders price comparisons and the calculation of production costs invalid under the Department's normal methodologies. *See Tapered Roller Bearings and Parts Thereof, Finished or Unfinished, From the People's Republic of China: Preliminary Results of Antidumping Duty Administrative Review and Notice of Intent to Rescind in Part*, 70 FR 39744 (July 11, 2005), unchanged in *Tapered Roller Bearings and Parts Thereof, Finished and Unfinished, from the People's Republic of China: Final Results of 2003–2004 Administrative Review and Partial Rescission of Review*, 71 FR 2517 (January 17, 2006).

We calculated NV by adding the value of the FOPs, general expenses, profit, and packing costs. The FOPs for subject merchandise include: (1) quantities of raw materials employed; (2) hours of labor required; (3) amounts of energy and other utilities consumed; (4) representative capital and selling costs; and (5) packing materials. We used the FOPs that Since Hardware reported for materials, energy, labor, and packing, and valued those FOPs by multiplying the amount of the factor consumed in

producing subject merchandise by the average unit surrogate value of the factor.

In addition, we added freight costs to the surrogate costs that we calculated for material inputs. We calculated freight costs by multiplying surrogate freight rates by the shorter of the reported distance from the domestic supplier to the factory that produced the subject merchandise or the distance from the nearest seaport to the factory that produced the subject merchandise, as appropriate. Where there were multiple domestic suppliers of a material input, we calculated a weighted–average distance after limiting each supplier's distance to no more than the distance from the nearest seaport to Since Hardware. This adjustment is in accordance with the decision by the Court of Appeals for the Federal Circuit in *Sigma Corp. v. United States*, 117 F.3d 1401, 1407–1408 (Fed. Cir. 1997).

We also increased the calculated costs of the FOPs for surrogate general expenses and profit. *See* Surrogate Values Memorandum at Exhibit 7.

2. Selection of Surrogate Values

In selecting surrogate values, we followed, to the extent practicable, the Department's practice of choosing public values which are non–export averages, representative of a range of prices in effect during the POR, or over a period as close as possible in time to the POR, product–specific, and tax–exclusive. *See*, *e.g.*, *Notice of Preliminary Determination of Sales at Less Than Fair Value, Negative Preliminary Determination of Critical Circumstances and Postponement of Final Determination: Certain Frozen and Canned Warmwater Shrimp From the Socialist Republic of Vietnam*, 69 FR 42672, 42682 (July 16, 2004), unchanged in *Final Determination of Sales at Less Than Fair Value: Certain Frozen and Canned Warmwater Shrimp From the Socialist Republic of Vietnam*, 69 FR 71005 (December 8, 2004). We also considered the quality of the source of surrogate information in selecting surrogate values. *See Manganese Metal From the People's Republic of China; Final Results and Partial Rescission of Antidumping Duty Administrative Review*, 63 FR 12440 (March 13, 1998). Where we could obtain only surrogate values that were not contemporaneous with the POR, we inflated (or deflated) the surrogate values using the Indian wholesale price index (WPI) as published in *International Financial Statistics* by the International Monetary Fund. *See* Surrogate Values Memorandum at Exhibit 1.

In calculating surrogate values from import statistics, in accordance with the Department's practice, we disregarded statistics for imports from NME countries and countries deemed to maintain broadly available, non–industry-specific subsidies which may benefit all exporters to all export markets (*e.g.*, Indonesia, South Korea, and Thailand). *See*, *e.g.*, *Final Determination of Sales at Less Than Fair Value: Certain Automotive Replacement Glass Windshields From The People's Republic of China*, 67 FR 6482 (February 12, 2002) and accompanying Issues and Decision Memorandum at Comment 1; *see also Notice of Preliminary Determination of Sales at Less Than Fair Value, Postponement of Final Determination, and Affirmative Preliminary Determination of Critical Circumstances: Certain Color Television Receivers From the People's Republic of China*, 68 FR 66800, 66808 (November 28, 2003), unchanged in *Notice of Final Determination of Sales at Less Than Fair Value and Negative Final Determination of Critical Circumstances: Certain Color Television Receivers From the People's Republic of China*, 69 FR 20594 (April 16, 2004). Additionally, we excluded from our calculations imports that were labeled as originating from an unspecified country because we could not determine whether they were from an NME country.

Except as noted in the section entitled "Surrogate Country," above, we valued all direct materials (zinc–galvanized cold–rolled steel plate, zinc–galvanized hot–rolled steel tube, aluminum tube, aluminum parts, PP plastic parts, PVC plastic parts, zinc–galvanized iron clip, lock washer, spring, tapping screw, bolt, nut, rivet, and welding rod) using weighted–average Indian import values derived from the World Trade Atlas online (WTA), for the period December 2007 through November 2008. *See* Surrogate Values Memorandum at Exhibit 2. We valued rubber wheels using WTA data for imports to the Philippines for the same December 2007 through November 2008 period. *Id.* In addition, we valued packing material inputs (corrugated paper, plastic strip, label, steel clip, polyethylene plastic sheet, and the instruction manual) with weighted–average Indian import values derived from the WTA for the period December 2007 through November 2008. *Id.* at Exhibit 4. The Indian import statistics obtained from the WTA were published by the Indian Directorate General of Commercial Intelligence and Statistics, Ministry of Commerce of India, and are contemporaneous with the POR.

Energy inputs consisted of argon gas and electricity. We valued argon gas using weighted–average Indian import values derived from the WTA for the period December 2007 through November 2008. *See* Surrogate Values Memorandum at Exhibit 3. We valued electricity using price data for small, medium, and large industries, as published by the Central Electricity Authority of the Government of India in its publication titled *Electricity Tariff & Duty and Average Rates of Electricity Supply in India*, dated March 2008. These electricity rates represent actual country–wide publicly–available information on tax–exclusive electricity rates charged to industries in India. We did not inflate this value because utility rates represent current rates, as indicated by the effective dates listed for each of the rates provided. *See* Surrogate Value Memorandum at Exhibit 3 for our computation.

We valued truck freight expenses for inputs using the same surrogate data source we used for valuing domestic inland freight for Since Hardware's U.S. sale (*i.e.*, we used data from the website *http://www.infobanc.com/logistics/logtruck.htm*, which contains inland freight truck rates between many large Indian cities). *See* Surrogate Values Memorandum at Exhibit 5.

The electricity and truck freight expenses were denominated in Indian rupees. Therefore, in accordance with section 773A(a) of the Act and 19 CFR 351.415, we converted them to U.S. dollars using the official exchange rate for India recorded on the date of sale of subject merchandise in this case. See *http://www.ia.ita.doc.gov/exchange/index.html*.

The Department's regulations require the use of a regression–based wage rate. *See* 19 CFR 351.408(c)(3). Therefore, to value labor, the Department used the regression–based wage rate for the PRC published on the Import Administration website. *See* the IA website at: *http://ia.ita.doc.gov/wages/07wages/2009–2007–wages.html#table1*.

To value the surrogate financial ratios for factory overhead (OH), selling, general & administrative (SG&A) expenses, and profit, the Department prefers to use contemporaneous, publicly available and subsidy–free financial statements of companies producing comparable merchandise from the surrogate country. For these preliminary results, Department used the 2005–2006 financial statement of Godrej & Boyce Manufacturing Company Limited (Godrej & Boyce), an Indian producer of comparable

merchandise. However, Godrej & Boyce's 2005–2006 financial statement does make reference to an unspecified "{i}nvestment subsidy under the Central/State investment incentive scheme." See Surrogate Values Source Documents, Exhibit 1 at 27. The Department has a general practice to reject the use of certain financial statements where the statements show that the company benefitted from subsidy programs which Commerce has found to be countervailable. *See Certain Tissue Paper Products from the People's Republic of China: Final Results and Partial Rescission of the 2007–2008 Antidumping Duty Administrative Review and Determination Not to Revoke in Part*, 74 FR 52176 (October 9, 2009). Nevertheless, we have used Godrej & Boyce's 2005–2006 financial statement for these preliminary results because it is the only financial statement available to us and it is unclear if the subsidy mentioned is countervailable. For the final results, we invite interested parties to submit additional financial statements to the record for consideration. We will then examine again whether it is appropriate to use Godrej & Boyce's financial statement to calculate the surrogate financial ratios.

Currency Conversion

We made currency conversions into U.S. dollars, in accordance with section 773A(a) and 19 CFR 351.415 of the Act, based on the exchange rates in effect on the dates of the U.S. sales as certified by the Federal Reserve Bank. These exchange rates can be accessed at the IA website at: *http://ia.ita.doc.gov/exchange/index.html*.

Preliminary Results of Review

We preliminarily determine that the following dumping margin exists during the period December 1, 2007, through November 30, 2008:

Manufacturer/Exporter	Margin (percent)
Since Hardware (Guangzhou) Co., Ltd. (Since Hardware)	17.57

Public Comment

In accordance with 19 CFR 351.224(b), the Department will disclose to parties to this proceeding the calculations performed in reaching the preliminary results within five days of publication of these preliminary results. Interested parties may submit written comments (case briefs) within 30 days of publication of the preliminary results and rebuttal comments (rebuttal briefs) within five days after the time limit for filing case briefs. *See* 19 CFR 351.309(c)(1)(ii) and 351.309(d)(1). Pursuant to 19 CFR 351.309(d)(2), rebuttal briefs must be limited to issues raised in the case briefs. Parties who submit arguments are requested to submit with the case or rebuttal briefs: (1) a statement of the issue; (2) a brief summary of the argument; and (3) a table of authorities. Further, the Department requests that parties submitting written comments provide the Department with a diskette containing the public version of those comments.

Any interested party may request a hearing within 30 days of publication of this notice. *See* 19 CFR 351.310(c). Interested parties who wish to request a hearing or to participate if one is requested, must submit a written request to the Assistant Secretary for Import Administration within 30 days of publication of this notice. Requests should contain: (1) the party's name, address, and telephone number; (2) the number of participants; and (3) a list of issues to be discussed. *See* 19 CFR 351.310(c). Issues raised in the hearing will be limited to those raised in the briefs.

Unless the deadline is extended pursuant to section 751(a)(2)(B)(iv) of the Act, the Department will issue the final results of this administrative review, including the results of our analysis of the issues raised by the parties in their comments, within 90 days of publication of these preliminary results.

Assessment Rates

Upon issuing the final results of the review, the Department shall determine, and CBP shall assess, antidumping duties on all appropriate entries. The Department intends to issue assessment instructions to CBP 15 days after the date of publication of the final results of review. Pursuant to 19 CFR 351.212(b)(1), we will calculate importer–specific *ad valorem* duty assessment rates based on the ratio of the total amount of the dumping duties calculated for the examined sales to the total entered value of those same sales. We will instruct CBP to assess antidumping duties on all appropriate entries covered by this review if any importer–specific assessment rate calculated in the final results of this review is above *de minimis*. However, the final results of this review shall be the basis for the assessment of antidumping duties on entries of merchandise covered by the final results of this review and for future deposits of estimated duties, where applicable.

Cash Deposit Requirements

The following cash deposit requirements, when imposed, will apply to all shipments of subject merchandise entered, or withdrawn from warehouse, for consumption on or after the publication of the final results of this administrative review, as provided by section 751(a)(2)(C) of the Act: (1) the cash deposit rate for Since Hardware will be the rate established in the final results of this administrative review; (2) for any previously reviewed or investigated PRC or non–PRC exporter, not covered in this administrative review, with a separate rate, the cash deposit rate will be the company–specific rate established in the most recent segment of this proceeding; (3) for all other PRC exporters, the cash deposit rate will continue to be the PRC–wide rate (*i.e.*, 383.60 percent); and (4) the cash–deposit rate for any non–PRC exporter of subject merchandise from the PRC will be the rate applicable to the PRC exporter that supplied that exporter. These cash deposit requirements, when imposed, shall remain in effect until further notice.

Notification to Importers

This notice serves as a preliminary reminder to importers of their responsibility under 19 CFR 351.402(f)(2) to file a certificate regarding the reimbursement of antidumping duties prior to liquidation of the relevant entries during this review period. Failure to comply with this requirement could result in the Secretary's presumption that reimbursement of antidumping duties occurred and the subsequent assessment of double antidumping duties.

This administrative review and notice are in accordance with sections 751(a)(2)(B) and 777(i) of the Act and 19 CFR 351.214(i).

Dated: December 31, 2009.

Susan H. Kuhbach,

Acting Deputy Assistant Secretary for Import Administration.

[FR Doc. 2010–30 Filed 1–8–10; 8:45 am]

BILLING CODE 3510–DS–S

DEPARTMENT OF COMMERCE

Economic Development Administration

[Docket No.: 100105005–0006–01]

Solicitation of Applications for the Community Trade Adjustment Assistance Program

AGENCY: Economic Development Administration (EDA), Department of Commerce.

ACTION: Notice and request for applications.

SUMMARY: In February of 2009, Congress enacted the Trade and Globalization Adjustment Assistance Act of 2009, which in part was intended to establish a new Community Trade Adjustment Assistance (Community TAA) Program under chapter 4 of title II of the Trade Act of 1974 (19 U.S.C. 2371 *et seq.*) (Trade Act) to help communities respond to the loss of jobs caused by the layoffs at firms and other types of employers impacted by trade competition. This notice announces general policies and application requirements for the Community TAA Program. Grants made under the program may be used to support a wide range of technical, planning, and infrastructure projects to help communities adapt to pressing trade impact issues and diversify their economies.

To be eligible to apply, a community must have been impacted by trade as evidenced by one or more "Cognizable Certifications" being made with respect to the community under one of the following three Trade Adjustment Assistance (TAA) programs: TAA for Workers, TAA for Firms, or TAA for Farmers. In addition, EDA must make an "Affirmative Determination" that an applicant is an "Impacted Community," meaning that EDA determines the community is significantly affected by the threat to, or the loss of, jobs associated with one or more Cognizable Certifications. A community may rely on more than one Cognizable Certification to show trade impact, but must use the most recent certification to determine whether the community must submit as a Grandfathered Community or as Group A or B Standard Date Community. Please see below and sections III.B.2. and III.B.3 of the FFO announcement for a complete discussion. Applications for assistance from eligible communities will be competitively evaluated in order to maximize the impact of the program in creating and saving jobs.

Applicants are advised to read carefully all information and instructions contained in the Federal Funding Opportunity (FFO) announcement for this request for applications. To access the FFO announcement, please see the Web sites listed below under "Electronic Access."

DATES: The deadline for the submission of full applications for grant assistance under this notice is April 20, 2010. Please note that this competitive solicitation has two categories of applicants: "Grandfathered Communities" and "Standard Date Communities." In addition, the "Standard Date Communities" category has been further broken down into Groups A and B because of timing considerations. Although there is one deadline for grant applications under the program, the Trade Act requires that Grandfathered Communities and Group A Standard Date Communities must submit certain information to preserve their eligibility under the program. This information may either be submitted as part of a full application or as a preapplication using the *Application for Federal Assistance* (Form SF–424). The following paragraphs provide more detailed information.

Dates for Preapplication and Application Submissions: Different deadlines apply to preapplications and full applications.

Grandfathered Communities With a Cognizable Certification Made on or After January 1, 2007 and Before August 1, 2009

A Grandfathered Community must submit information for EDA's Affirmative Determination by February 1, 2010 to be eligible for funding under the Community TAA Program. Although the deadline for full applications is April 20, 2010, EDA strongly encourages Grandfathered Communities to submit their full application for grant assistance by the February 1, 2010 deadline for submission of their information for an Affirmative Determination. Submission of the full application by this date will allow EDA to make the Affirmative Determination in connection with the decision on whether EDA will fund the application. However, Grandfathered Communities that are not prepared to submit a full application by the February 1, 2010 deadline for the Affirmative Determination must submit a preapplication, using Form SF–424, by February 1, 2010. Applicants choosing to submit a preapplication still must submit a full application for grant assistance by the April 20, 2010 deadline to be considered for funding under the program.

Group A Standard Date Communities With Cognizable Certifications Made on or After August 1, 2009 Through October 21, 2009

Group A Standard Date Communities must submit information for EDA's Affirmative Determination within 180 days of the date of the community's most recent Cognizable Certification. EDA strongly encourages Group A Standard Date Communities to submit a full application for grant assistance that incorporates information necessary for EDA to make an Affirmative Determination within the statutory 180-day window. Submission of a full application within the 180-day window will allow EDA to make an Affirmative Determination in connection with the decision on whether EDA will fund the application. However, Group A Standard Date Communities that are not prepared to submit a full application within the 180-day window for an Affirmative Determination may submit a preapplication using Form SF–424, which also must include information for the Affirmative Determination, within 180 days of the date of its most recent Cognizable Certification. Applicants choosing to submit a preapplication still must submit a full application for grant assistance by the April 20, 2010 competition deadline to be considered for funding under the program.

Group B Standard Date Communities With a Cognizable Certification Made on or After October 22, 2009

Group B Standard Date Communities must submit a full application that incorporates necessary information for EDA to make an Affirmative Determination by the April 20, 2010 deadline to be considered for funding under the program. Group B Standard Date Communities do not need to submit a preapplication to preserve their eligibility because the April 20, 2010 grant application deadline occurs within their 180-day window for an Affirmative Determination.

Preapplications and full applications must be either: (a) Transmitted and time stamped at *http://www.grants.gov* no later than 5 p.m. (local time in the EDA regional office to which an applicant will be submitting) on the last day of the applicable preapplication or application deadline; or (b) received by the applicable EDA regional office listed below under "Addresses and Telephone Numbers for EDA's Regional Offices" and in section VIII. of the FFO announcement no later than 5 p.m. (local time in the EDA regional office to which an applicant will be submitting)

on the last day of the applicable preapplication or application deadline.

ADDRESSES:

Obtaining Application Packages. An applicant may obtain the appropriate preapplication or full application package electronically at *http://www.grants.gov.* All components of the appropriate package may be accessed and downloaded (in a screen-fillable format) at *http://www.grants.gov/applicants/apply_for_grants.jsp.* Alternatively, applicants eligible for assistance under this notice may request paper (hardcopy) preapplication or full application packages by contacting the applicable EDA regional office servicing your geographic area listed below under "Addresses and Telephone Numbers for EDA's Regional Offices" and in section VIII. of the FFO announcement.

Application Submission Formats: Preapplications and full applications may be submitted either (i) electronically in accordance with the procedures provided at *http://www.grants.gov;* or (ii) in paper format to the applicable regional office address provided below. The content of submissions is the same for paper submissions as it is for electronic submissions. EDA will not accept facsimile transmissions of preapplications or full applications. Note that EDA has regional offices in Atlanta and Philadelphia (Eastern Time); Austin and Chicago (Central Time); Denver (Mountain Time); and Seattle (Pacific Time). The regional offices and the States they serve are listed below under "Addresses and Telephone Numbers for EDA's Regional Offices" and in section VIII. of the FFO announcement. Preapplications or applications received after the applicable deadline will be considered non-responsive and will not be considered for an Affirmative Determination or for funding, respectively.

Electronic Submissions: Applicants are encouraged to submit preapplications and full applications electronically in accordance with the instructions provided at *http://www.grants.gov.* The preferred file format for electronic attachments is portable document format (PDF); however, EDA will accept electronic files in Microsoft Word, WordPerfect, or Microsoft Excel formats. Validation or rejection of your preapplication or application by *http://www.grants.gov* may take additional days after your submission. Therefore, please consider the *http://www.grants.gov* validation/rejection process in developing your application submission timeline. See section IV.G.1. of the FFO announcement for more information.

Applicants should access the following link for assistance in navigating *http://www.grants.gov* and for a list of useful resources: *http://www.grants.gov/applicants/applicant_help.jsp.* If you do not find an answer to your question under Frequently Asked Questions, try consulting the Applicant's User Guide. If you still cannot find an answer to your question, contact *http://www.grants.gov* via e-mail at *support@grants.gov* or telephone at 1–800–518–4726. The hours of operation for *http://www.grants.gov* are Monday–Friday, 7 a.m. to 9 p.m. (Eastern Time) (except for Federal holidays).

Paper Submissions: An eligible applicant under this notice may submit a completed paper preapplication or full application to the applicable EDA regional office listed below. The applicant must submit one original and two copies of the appropriate completed package via postal mail, shipped overnight, or hand-delivered to the applicable regional office, unless otherwise directed by EDA staff. Department of Commerce mail security measures may delay receipt of United States Postal Service mail for up to two weeks. Therefore, applicants who submit paper submissions are advised to use guaranteed overnight delivery services.

Addresses and Telephone Numbers for EDA's Regional Offices: Applicants in Alabama, Florida, Georgia, Kentucky, Mississippi, North Carolina, South Carolina and Tennessee, may submit paper submissions to: Economic Development Administration, Atlanta Regional Office, 401 West Peachtree Street, NW., Suite 1820, Atlanta, Georgia 30308. Telephone: (404) 730–3002, Fax: (404) 730–3025.

Applicants in Arkansas, Louisiana, New Mexico, Oklahoma and Texas, may submit paper submissions to: Economic Development Administration, Austin Regional Office, 504 Lavaca, Suite 1100, Austin, Texas 78701–2858. Telephone: (512) 381–8144, Fax: (512) 381–8177.

Applicants in Illinois, Indiana, Michigan, Minnesota, Ohio, Wisconsin and Muscatine and Scott counties, Iowa, may submit paper submissions to: Economic Development Administration, Chicago Regional Office, 111 North Canal Street, Suite 855, Chicago, Illinois 60606. Telephone: (312) 353–7706, Fax: (312) 353–8575.

Applicants in Colorado, Iowa (excluding Muscatine and Scott counties), Kansas, Missouri, Montana, Nebraska, North Dakota, South Dakota, Utah and Wyoming, may submit paper submissions to: Economic Development Administration, Denver Regional Office, 410 17th Street, Suite 250, Denver, Colorado 80202. Telephone: (303) 844–4714, Fax: (303) 844–3968.

Applicants in Connecticut, Delaware, District of Columbia, Maine, Maryland, Massachusetts, New Hampshire, New Jersey, New York, Pennsylvania, Puerto Rico, Rhode Island, Vermont, U.S. Virgin Islands, Virginia and West Virginia, may submit paper submissions to: Economic Development Administration, Philadelphia Regional Office, Curtis Center, 601 Walnut Street, Suite 140 South, Philadelphia, Pennsylvania 19106. Telephone: (215) 597–4603, Fax: (215) 597–1063.

Applicants in Alaska, American Samoa, Arizona, California, Guam, Hawaii, Idaho, Marshall Islands, Micronesia, Nevada, Northern Mariana Islands, Oregon, Republic of Palau and Washington, may submit paper submissions to: Economic Development Administration, Seattle Regional Office, Jackson Federal Building, Room 1890, 915 Second Avenue, Seattle, Washington 98174. Telephone: (206) 220–7660, Fax: (206) 220–7669.

FOR FURTHER INFORMATION CONTACT: For additional information or for a paper copy of the FFO announcement, contact the appropriate EDA regional office listed above. EDA's Internet Web site at *http://www.eda.gov* also contains additional information on EDA and its programs.

SUPPLEMENTARY INFORMATION:

Program Information: EDA's mission is to lead the Federal economic development agenda by promoting innovation and competitiveness, preparing American regions for growth and success in the worldwide economy. The Trade and Globalization Adjustment Assistance Act of 2009, which was included as subtitle I within the American Recovery and Reinvestment Act of 2009 (Pub. L. 111–5, 123 Stat. 115, at 367), made certain changes to the Trade Act of 1974 as amended (19 U.S.C. 2341 *et seq.*) (Trade Act), including establishing the Community TAA Program under chapter 4 of title II of the Trade Act.

The Community TAA Program is one of several economic development programs that EDA administers and is designed to provide communities with comprehensive and flexible solutions to a wide variety of trade impacts. There currently are a number of TAA programs authorized under the Trade Act that target assistance to specific groups within and members of a community; for example workers and

firms. However, the negative impacts of trade are not just felt by discrete groups; they reverberate throughout an entire community. The closure or downsizing of a key industry, company, or plant creates severe economic challenges for an entire community impacted by trade. The Community TAA Program supplements and builds upon the other TAA programs by providing comprehensive assistance to address these challenges. The overall goal of the Community TAA Program is to help communities respond holistically and proactively to trade impacts and become more competitive in the global economy. The Community TAA program will help eligible communities devise long-term Strategic Plans and carry out implementation activities to address economic development challenges in regions affected by trade impacts.

EDA publishes this notice to announce the competitive solicitation for the Community TAA Program. EDA will evaluate and select applications according to the investment policy guidelines and funding priorities set forth below under "Funding Priorities" and in section V.A. of the FFO announcement. Unless otherwise provided in this notice or in the FFO announcement, applicant eligibility, program objectives and priorities, application procedures, evaluation criteria, selection procedures, and other requirements for the Community TAA are set forth in EDA's regulations (codified at 13 CFR part 313) and applicants must address these requirements. EDA's regulations and the Trade Act are available at *http://www.eda.gov/InvestmentsGrants/Lawsreg.xml.*

Electronic Access: The FFO announcement for the Community TAA Program competition is available at *http://www.grants.gov* and at *http://www.eda.gov.* EDA has created a Community TAA Web page with additional information on the program at *http://www.eda.gov/CommunityTAA.*

Funding Availability: Under the Supplemental Appropriations Act, 2009 (Pub. L. 111–32, 123 Stat. 1859, at 1860 (2009)), funding in the amount of $40,000,000 was appropriated for both the Community TAA and TAA for Firms Programs authorized under the Trade Act, as amended by the Trade and Globalization Adjustment Assistance Act of 2009 (TGAAA). Under this notice, $36,768,000 is available for the Community TAA Program and shall remain available until September 30, 2010. In accordance with section 275 of the Trade Act (19 U.S.C. 2371d(c)), an Impacted Community may not receive more than $5,000,000 to implement a Strategic Plan developed under section 276 of the Trade Act. See also 13 CFR 313.2 for the definition of Strategic Plan. Also, in accordance with section 276(c)(2) of the Trade Act (19 U.S.C. 2371e(c)(2)), no more than $25,000,000 of the total amount appropriated for the Community TAA Program may be made available for grants to develop Strategic Plans.

Catalog of Federal Domestic Assistance (CFDA) Numbers: 11.010, Community Trade Adjustment Assistance.

Affirmative Determinations: EDA must make an Affirmative Determination that a community is an Impacted Community before the community may receive grant assistance under this program. Section 273(a) of the Trade Act (19 U.S.C. 2371b) describes the requirements for the Affirmative Determination. There are two categories of applicants under this competitive solicitation: Grandfathered Communities and Standard Date Communities. Also, please note that because of timing considerations EDA has divided the Standard Date Communities category into two groups: Group A and Group B. Different deadlines for submitting preapplications or full applications apply to each category or group of applicant. Please read the below information and section III.B. of the FFO announcement carefully to ensure that your community submits a preapplication or full application on time or can rely on one of the lists that EDA has created to ease the Affirmative Determination burden.

EDA Lists To Assist Communities With Affirmative Determination Requirements

EDA has analyzed TAA certification data and created two lists to assist communities in identifying their eligibility for the Community TAA Program: The TAA for Workers Significantly Impacted County List and the TAA for Firms Certifications List. A community that is not on either list still may request an Affirmative Determination by submitting a preapplication or full application that includes the information necessary to establish the requisite trade impact in accordance with section III.B.4. of the FFO announcement. Please note that different deadlines apply to both Grandfathered and Standard Date Communities, which are noted under "Dates for Submission of Information for Affirmative Determinations" below and section III.B.2. of the FFO announcement. If a preapplication or full application is submitted after the relevant deadlines, it will not be considered.

1. TAA for Workers Significantly Impacted County List

To assist communities in demonstrating trade impact significance, EDA has analyzed job-loss data in connection with the TAA for Workers Program. In order to assess the relative impact associated with the loss of jobs due to the trade impact leading to TAA for Workers Program Cognizable Certifications, EDA ranked counties with TAA for Workers certifications since January 1, 2007 based on the number of workers receiving assistance under the TAA for Workers Program. *See* the EDA Web site at *http://www.eda.doc.gov/CommunityTAA* for further information. Based on that analysis, EDA has determined that certain counties have experienced a significant impact attributable to job losses associated with the certifications under the TAA for Workers Program. EDA has posted the results of this analysis in a list titled "TAA for Workers Significantly Impacted County List" at *http://www.eda.doc.gov/CommunityTAA.* Since EDA has conducted a significance analysis on the front end, a county on the list will be deemed to have suffered a significant impact due to trade and to be an Impacted Community. Such counties may proceed to apply for an implementation grant by April 20, 2010 in accordance with sections III.C. and IV. of the FFO announcement.

2. TAA for Workers Significantly Impacted County List—Importance for Communities That Are Not Counties

Please note that EDA's TAA for Workers Significantly Impacted County List only addresses trade impact significance at the county level. For a sub-county community (for example a city or township) that is not on this list, but is located within a county on the list, EDA still must make an Affirmative Determination that the sub-county community itself is an Impacted Community that has been significantly affected by the threat to, or the loss of, jobs associated with one ore more Cognizable Certifications. Even though sub-county communities are not included on the TAA for Workers Significantly Impacted County List, the list may help a city or township, for example, identify potential eligibility for grant assistance under the Community TAA Program. For example, assume City A is located in County B, which county is located on the TAA for Workers Significantly Impacted County List. Even though City A is not

automatically deemed to be an Impacted Community, being in a county that is on the list alerts City A that it might have a significant trade impact. City A should search the Department of Labor's "TAA Petition Determination" Web site at *http://www.doleta.gov/tradeact/taa/taa_search_form.cfm* to determine whether a TAA for Workers certification has been made in the community since January 1, 2007 and to assess the impact of any certifications in accordance with section III.B.4. of the FFO announcement, which contains detailed information on how to use TAA for Workers certifications for an Affirmative Determination.

A sub-county community located in a county on EDA's TAA for Workers Significantly Impacted County List also should note that the list includes all TAA for Workers certifications made since January 1, 2007 until the date noted on the list, which means that the list does not reflect timing concerns for Affirmative Determination purposes. When a community that wishes to apply searches the Department of Labor's "TAA Petition Determination" Web site at *http://www.doleta.gov/tradeact/taa/taa_search_form.cfm,* the community must be careful to note the Decision Date of the most recent TAA for Workers certification to ensure that their submission reaches EDA by the deadlines noted under paragraphs 2 and 3 of section III.B. of the FFO announcement. Using the example above, City A must determine the Decision Date of its most recent TAA for Workers certification in order to submit information for EDA's Affirmative Determination in a timely manner.

Please note that the TAA for Workers Significantly Impacted County List is *not* a listing of all communities that have had a TAA for Workers certification since January 1, 2007. The list is a significance analysis of those certifications, and therefore, a county or community that has had a TAA for Workers certification may find that it or the county in which it is located is not on the list. Such a community that has had a TAA for Workers certification and finds that the certification has had a significant impact on the community still may submit information for EDA's Affirmative Determination in accordance with section III.B.4. of the FFO announcement.

A note on searching the Department of Labor Web site: The Department of Labor's underlying data was organized by city, but because of the volume of data and to ensure ease of use, EDA aggregated the Department of Labor's list to the county level in creating EDA's TAA for Workers Significantly Impacted County List. Therefore, each sub-county community that is not on this list, but is located within one of the counties on the list and wishes to apply must search the Department of Labor's petition determination Web site by city and State. In addition, the community should insert a determination date range of January 1, 2007 through the present date (the date of the search) since certifications before January 1, 2007 do not establish eligibility. A community should take care to select the search option on the Web site for "Certifications" so that only approved TAA for Workers certifications appear.

EDA will post updates to the TAA for Workers Significantly Impacted County List on approximately the 20th day of each month through April 2010. As noted above, counties not on the list or other communities that are located outside counties on the list may seek an Affirmative Determination of trade impact by submitting the information necessary to establish that impact as described in section III.B.4. of the FFO announcement. Also as noted above, EDA's TAA for Workers Significantly Impacted County List includes all TAA for Workers certifications since January 1, 2007. Therefore, the list does not reflect timing concerns, and a community must search the Department of Labor's "TAA Petition Determination" Web site at *http://www.doleta.gov/tradeact/taa/taa_search_form.cfm* to determine the date of the community's most recent Cognizable Certification and whether the community should apply as a Grandfathered Community or a Group A or B Standard Date Community.

3. TAA for Firms Certifications List

EDA also has posted a list organized by city and State of TAA for Firms certifications since January 1, 2007 at *http://www.eda.doc.gov/CommunityTAA.* Because of data limitations, the TAA for Firms Certifications List does *not* indicate significance of trade impact and a community that has had a TAA for Firms certification still must petition for EDA's Affirmative Determination in accordance with the deadlines set out below under sections III.B.2. and III.B.3. of the FFO announcement. EDA will post updates to the TAA for Firms Certifications List on approximately the 20th day of each month through April 2010. You may contact EDA's TAA for Firms staff at *taac@eda.doc.gov.*

4. TAA for Farmers

As of the date of publication of this notice, there had been no certifications under the TAA for Farmers Program for the relevant time period from January 1, 2007 through the publication date of this notice. As certifications are made under the TAA for Farmers Program, the Department of Agriculture will publish notice of them in the **Federal Register.** More updates are available on the program Web site at *http://www.fas.usda.gov/ITP/TAA/taa.asp.*

Dates for Submission of Information for Affirmative Determinations

As noted above, a community that is not on EDA's TAA for Workers Significantly Impacted County List must seek an Affirmative Determination to be deemed Impacted Community. The below information details the deadlines that apply to the two categories of applicants under this competitive solicitation: Grandfathered Communities and Standard Date Communities. Also, please note that because of timing considerations EDA has divided the Standard Date Communities category into two groups: Group A and Group B.

A community may rely on more than one Cognizable Certification to show trade impact, but must use the most recent certification to determine whether the community must submit as a Grandfathered Community or as Group A or B Standard Date Community.

1. Grandfathered Communities

A Grandfathered Community is a community that had one or more Cognizable Certifications made with respect to it on or after January 1, 2007 and before August 1, 2009. *See* section 273(a)(2) of the Trade Act and 13 CFR 313.2. In accordance with section 273(c) of the Trade Act, a Grandfathered Community must submit information for EDA's Affirmative Determination by February 1, 2010. A Grandfathered Community that does not submit a preapplication or full application in a timely manner is not eligible for grant assistance under the Community TAA Program. Because of limited program resources, EDA encourages a Grandfathered Community to incorporate its information for EDA's Affirmative Determination along with its full application for grant assistance on the *Application for Federal Assistance* (Form SF–424) (checking the box for "Application" in item 1 of the form), and to submit this package by the February 1, 2010 deadline. In this case, an attachment to item 15 of the Form SF–424 must contain all information for EDA to make an Affirmative Determination in accordance with 13 CFR 313.4. See section III.B.4. of the FFO announcement for more information on the required

attachment(s) and section III.C. for more information on full application packages.

If a Grandfathered Community is not prepared to submit a full application by February 1, 2010, the Grandfathered Community may preserve its eligibility by submitting a preapplication by February 1, 2010 to request an Affirmative Determination using Form SF–424 and checking "Preapplication" in item 1 of the form. The preapplication must describe the threat to, or the loss of, jobs associated with the applicable grandfathered Cognizable Certification(s) and include the information set out in section III.B.4. of the FFO announcement to allow EDA to make an Affirmative Determination. If a Grandfathered Community does not have complete information about the trade impact at the time it submits a preapplication by February 1, 2010, it may supplement the information provided with its preapplication with additional data when it submits its complete application. However, the Grandfathered Community should be aware that it must submit all information necessary for EDA's Affirmative Determination and a full grant application by the competition deadline of April 20, 2010 to be considered for grant funding under the program.

2. Standard Date Communities

A Standard Date Community is a community with its most recent Cognizable Certification made on or after August 1, 2009. Because EDA is holding a single competition for the Community TAA Program with a deadline date of April 20, 2010 and section 273 of the Trade Act requires EDA to make an Affirmative Determination of the significance of trade impact based on information submitted not later than 180 days of a community's most recent Cognizable Certification, EDA has divided Standard Date Communities into two groups: Group A and Group B. Group A consists of Standard Date Communities that have their most recent Cognizable Certification made on or after August 1, 2009 through October 21, 2009 and Group B consists of Standard Date Communities that have their most recent Cognizable Certification made on or after October 22, 2009.

Both Group A and Group B communities must submit information for EDA's Affirmative Determination within 180 days of the date of their most recent Cognizable Certification. A Group A community, however, must check the date of its most recent Cognizable Certification, and submit information for an Affirmative Determination within 180 days of that certification or else it will not be eligible for grant assistance. A Group B Standard Date Community simply must submit its full application by April 20, 2010 because its most recent Cognizable Certification was made on or after October 22, 2009, and the application filing deadline is within the 180-day window for submission of information for an Affirmative Determination. Accordingly, the full application must contain all information for EDA's Affirmative Determination by the competition deadline of April 20, 2010. Please see the paragraphs below for more detailed information.

a. Group A: Standard Date Communities With Cognizable Certifications Made on or After August 1, 2009 Through October 21, 2009

If a Standard Date Community in Group A has its most recent Cognizable Certification made on or after August 1, 2009 through October 21, 2009, it must submit information for EDA's Affirmative Determination within 180 days of the date of that certification. A Group A community that does not submit the information in a timely manner is not eligible for grant assistance under the Community TAA Program. Because of limited program resources, EDA encourages such a community to submit the information for EDA's Affirmative Determination along with its full application for grant assistance in a full application (Form SF–424, checking the box for "Application" in item 1 of the form). In this case, the attachment to item 15 of the Form SF–424 in the application must contain all information for EDA to make an Affirmative Determination in accordance with 13 CFR 313.4. See section III.B.4. of the FFO announcement for more information on the required attachment(s) and section III.C. for more information on full application packages.

If a Group A community is not prepared to submit a full application within 180 days of the applicable Cognizable Certification, the community may preserve its eligibility by submitting a preapplication requesting an Affirmative Determination using Form SF–424 and checking the box for "Preapplication" in item 1 of the form. The preapplication must describe the threat to, or the loss of, jobs associated with the community's applicable Cognizable Certification(s) and include the information set out in section III.B.4. of the FFO announcement to allow EDA to make an Affirmative Determination. If a Group A community does not have complete information about the trade impact at the time it submits a preapplication within 180 days of the relevant Cognizable Certification, it may supplement the information provided with its preapplication with additional data when it submits its full application. However, the Group A Standard Date Community should be aware that it must submit all information necessary for EDA's Affirmative Determination and a full grant application by the competition deadline of April 20, 2010 to be considered for grant funding under the program.

Note that a Standard Date Community in Group A must attend carefully to the date of its most recent Cognizable Certification because the statute requires a community to submit its information for an Affirmative Determination within 180 days of that date. Because the April 20, 2010 deadline for this competitive solicitation exceeds the 180-day time period for those communities, a Group A Standard Date Community must protect its ability to be considered under the competition by submitting a preapplication or full application before the expiration of the 180-day window. A Group B Standard Date Community with a certification made on or after October 22, 2009 does not face this complication as the April 20, 2010 deadline for the competitive solicitation is in advance of the closing of the 180-day window applicable to its most recent Cognizable Certification.

b. Group B: Standard Date Communities With Certifications Made on or After October 22, 2009

If a Standard Date Community in Group B has its most recent Cognizable Certification made after October 22, 2009, it must submit a full application by April 20, 2010. Because the compressed timeframe during which funds are available requires expeditious delivery of program resources and reduced applicant burden, EDA will make its decision regarding an Affirmative Determination based on the full application for Community TAA grant assistance for Standard Date Communities in Group B. Accordingly, the full application must contain all information for EDA to make an Affirmative Determination in accordance with 13 CFR 313.4. A community must submit a Form SF–424 and check the box for "Application" in item 1 of the form and proceed to complete and submit an appropriate application for the community's proposed project in accordance with section IV. of the FFO announcement by April 20, 2010. A community that does not timely submit its application will not be considered for funding.

3. Significance Threshold

Note that in light of the limited funding available, EDA is not likely to find job losses associated with the applicable Cognizable Certifications to be "significant" unless the community demonstrates that at least 8.25 workers per 1,000 workers in the community's most recently reported Civilian Labor Force (CLF) have been impacted by TAA Cognizable Certifications or provides other evidence of equally severe economic distress such as the imminent threat of significant job loss associated with trade. For example, if the applicant's total CLF is 50,000, EDA would deem the trade impact to be "significant" if there was a job loss of at least 413 workers in the community's CLF (413/50,000 = 0.00825 × 1,000 = 8.25) associated with the community's Cognizable Certification(s). *Please see* section III.B.4. of the FFO announcement for detailed information on how to collect information on and perform the significance calculation.

Affirmative Determination Substance Requirements

EDA will use Form SF–424 for both preapplications and full applications. Communities are strongly encouraged to incorporate information for EDA's Affirmative Determination into their Form SF–424 as part of a full application package. If, however, Grandfathered or Group A Standard Date Communities are not prepared to submit a full application by their Affirmative Determination deadline, then may submit a preapplication for an Affirmative Determination using Form SF–424 by the applicable Affirmative Determination deadline. If a Grandfathered or Group A Standard Date Community elects to submit a preapplication for EDA's Affirmative Determination, the applicant community must check the box for "Preapplication" in item 1 of the form and complete all numbered items on Form SF–424 except for items 17, 18, and 19. If, however, the applicant is submitting Form SF–424 as part of a full application for grant assistance, the applicant community must complete all numbered items on Form SF–424. Note that for a Grandfathered or Group A Standard Date Community that elects to submit a preapplication using Form SF–424, the community must submit a second Form SF–424 as part of its full grant application, and all items on the Form SF–424 must be completed.

For both preapplications and full applications, a community must submit the necessary information using Form SF–424 to allow EDA to determine that the applicant community is "significantly affected" by the threat to, or loss of, jobs associated with one or more Cognizable Certification(s). Item 15 of Form SF–424 allows for attachments. If a Grandfathered or Group A Standard Date Community elects to submit a preapplication, the community should provide all of the following information and attach it at Item 15 (provided however, that if complete information is not available at the time of submission of the preapplication, the community must include the information at the time of filing its full application). If the community is submitting a complete application, the community must submit all of the following and the applicant's Project Narrative and other information for a complete full application package. Please see section IV. of the FFO announcement for details on a full application.

- Identify the applicable Cognizable Certification(s) upon which the community bases its Impacted Community status for timing purposes. Please note that the community must use its most recent Cognizable Certification to determine whether it must submit as a Grandfathered Community or Group A or Group B Standard Date Community and must clearly identify that certification. For example, if City A has two TAA for Workers certifications and one TAA for Firms certification and is applying as a Group B Standard Date Community, it must use the most recent Cognizable Certification, regardless of the program, to be classified as a Group B Standard Date Community, and identify the certification and the certification's date. Note that the community must identify and discuss all Cognizable Certifications upon which it relies for eligibility as a trade-impacted community in its narrative, as described below.
  - For TAA for Workers Cognizable Certifications, the applicant community must provide the TAA petition number associated with the Department of Labor's certification decision. TAA for Workers petition determinations may be accessed and searched electronically at *http://www.doleta.gov/tradeact/taa/taa_search_form.cfm.*
  - For TAA for Firms Certifications, the applicant community must provide the name of the firm certified under the program in the official notification letter provided by the Department of Commerce to the certified firm. A list of firms certified since January 1, 2007 has been posted on EDA's Web site at *http://www.eda.gov/CommunityTAA.* EDA will post updates to the TAA for Firms Certifications List on approximately the 20th day of each month through April 2010.
  - For TAA for Farmers certifications, the applicant community must provide the name and region (region, State, or multi-State area) of the certified agricultural commodity and the record identifier provided by the Department of Agriculture. Note that as of the date of publication of this notice, no certifications had been made under the TAA for Farmers Program. Visit the TAA for Farmers Web site at *http://www.fas.usda.gov/ITP/TAA/taa.asp* for updates on the status of the program. In addition, the Department of Agriculture will publish all certifications made under the program in the **Federal Register.**
- Percentage of the CLF affected by TAA for Workers, TAA for Firms, and/or TAA for Farmers certifications. To perform this calculation, a community needs to know two things: (1) How many workers were affected by a TAA Cognizable Certification; and (2) the community's most recently reported CLF. Please see section III.B.4. of the FFO announcement for detailed instructions on how to access the information for and perform this calculation.
- The source of the CLF data the community used to complete the significance calculation.
- A narrative describing the threat to, or the loss of, jobs associated with the applicable Cognizable Certification(s). If a community is applying based on the threat to jobs associated with a Cognizable Certification, it must include solid evidence of that threat, such as a notice issued under the Worker Adjustment and Retraining Notification (WARN) Act (19 U.S.C. 2101 *et seq.*) or similar official statements that relate to the applicable Cognizable Certification. Unsupported company announcements, even if publicly announced, are not likely to be deemed sufficient. A community's narrative should help EDA assess the merits of the application based on the severity of trade impacts affecting the community and evaluation criteria set out in section V.A. of the FFO announcement.

The information attached at item 15 of Form SF–424 and required for EDA's Affirmative Determination may not exceed five pages in length, double-spaced text, with approximately 200 to 300 words per page. The five-page limit is an upper limit only; and applicants should be concise as possible.

Once EDA has made an Affirmative Determination, EDA will consider the community to be an Impacted Community significantly impacted by trade. Because of the compressed time

schedule, Grandfathered and Group A Standard Date Communities that elect to submit a preapplication for an Affirmative Determination will then need to proceed and complete a full application for funding by April 20, 2010 to be considered for a grant. EDA will make a determination of the significance of the trade impact at the same time it decides whether to accept or decline the application for funding.

For applicants that are submitting a full application, please see section IV.C. of the FFO announcement for information on the Project Narrative, which must include information for EDA's Affirmative Determination.

Strategic Plan and Implementation Grant Assistance: Provided that EDA has made an Affirmative Determination that a community is an Impacted Community in connection with: (i) The TAA for Workers Significantly Impacted County List; (ii) a Grandfathered or Group A Standard Date Community's preapplication, or (iii) as part of the review of a community's full application, EDA will consider the Impacted Community's application for grant assistance to develop or carry out a Strategic Plan.

1. Grants To Develop Strategic Plans

Grants to develop a Strategic Plan are designed to help the Impacted Community achieve economic adjustment to trade impacts. *See* 13 CFR 313.6, which sets out the requirements for Strategic Plans, including requirements to ensure the involvement of private and public entities in the process and technical requirements designed to ensure that the plan analyzes current challenges and opportunities facing the Impacted Community.

EDA strongly encourages applicants to link and leverage existing planning efforts. A Strategic Plan should update and incorporate relevant provisions of existing plans that affect an Impacted Community's economic development efforts, such as an applicable Comprehensive Economic Development Strategy (CEDS) developed under EDA's regulations at 13 CFR 303.7 and strategies developed in concert with the U.S. Department of Transportation, U.S. Department of Energy, the Environmental Protection Agency, and other Federal, State, and local agencies.

2. Grants To Implement Projects or Programs in Strategic Plans

In order to award an application to implement a Strategic Plan, EDA must determine that the plan meets the requirements of section 276 of the Trade Act and EDA's implementing regulation at 13 CFR 313.6. EDA will review information submitted with the application to ensure that the proposed funding will support activities that respond to the economic dislocation attributable to the job losses that led to the Cognizable Certification(s) and to ensure that the activities are otherwise consistent with an acceptable Strategic Plan. The Impacted Community must submit its Strategic Plan for EDA's review and approval as part of its application. Note that if the community is relying on a CEDS as its Strategic Plan, it need not be re-submitted if EDA already has the current version.

Implementation grants may be provided for construction or non-construction projects. Such assistance may include: (1) Infrastructure improvements, such as site acquisition, site preparation, construction, rehabilitation, and equipping of facilities; (2) market or industry research and analysis; (3) technical assistance, including organizational development such as business networking, restructuring or improving the delivery of business services, or feasibility studies; (4) public services; (5) training; and (6) other activities justified by the Strategic Plan that satisfy applicable statutory and regulatory requirements. *See* 13 CFR 313.7. See section IV. of the FFO announcement for information on submitting application packages. EDA will not award grant assistance to establish revolving loan funds under the Community TAA Program.

Applicant Eligibility: Under section 271 of the Trade Act, a "community" is eligible to apply to participate in the Community TAA Program. The Trade Act defines community as "a city, county, or other political subdivision of a State or a consortium of political subdivisions of a State." District Organizations formed and operating in accordance with 13 CFR 304.2 that coordinate and implement the economic development activities of EDA's designated Economic Development Districts (EDDs) also are eligible to apply under this notice. EDA will review the eligibility of an applicant under this notice at the time the application for assistance is received in the regional office. *See* section 271 of the Trade Act (19 U.S.C. 2371) and 13 CFR 313.2.

In accordance with section 273 of the Trade Act (19 U.S.C. 2371b), to receive assistance under the Community TAA Program, a community must have one or more of the Cognizable Certifications described below made with respect to it:

1. *Trade Adjustment Assistance for Workers Program.* A certification by the Secretary of Labor that a group of workers in the community is eligible to apply for assistance under section 223 of the Trade Act (19 U.S.C. 2273).

2. *Trade Adjustment Assistance for Firms Program.* A certification by the Secretary of Commerce that a firm located in the community is eligible to apply for adjustment assistance under section 251 of the Trade Act (19 U.S.C. 2341).

3. *Trade Adjustment Assistance for Farmers Program.* A certification by the Secretary of Agriculture that a group of agricultural commodity producers in the community is eligible to apply for adjustment assistance under section 293 of the Trade Act (19 U.S.C. 2401b).

In order for a community to be eligible to apply for grant assistance under this funding opportunity, EDA must make an Affirmative Determination that the community is "significantly affected by the threat to, or the loss of, jobs associated with any such certification." Please note that communities may rely on more than one Cognizable Certification to show trade impact for EDA's Affirmative Determination as set out in section III.B.4. of the FFO announcement, but must use the most recent certification to determine whether the community must submit as a Grandfathered Community or as Group A or B Standard Date Community.

Once EDA has made such a determination, the community will be referred to as an Impacted Community. *See* section 273 of the Trade Act (19 U.S.C. 2371b) and 13 CFR 313.4. *See* sections III.B. and III.C. of the FFO announcement for more information on program process and timing considerations.

For-profit, private-sector entities are not eligible to apply for investment assistance under this notice.

Cost Sharing Requirement: For Strategic Plan grants, section 276(c)(1) the Trade Act (19 U.S.C. 2371e, 13 CFR 313.6(d)) provides that the Federal share of eligible costs may not exceed 75 percent. For implementation grants, section 275(d) of the Trade Act (19 U.S.C. 2371d, 13 CFR 313.7(d)) provides that the Federal share of eligible costs may not exceed 95 percent.

While cash contributions are preferred, in-kind contributions, consisting of contributions of space, equipment, or services, may provide the required non-Federal share of the total project cost. *See* 15 CFR 24.24. EDA will fairly evaluate all in-kind contributions, which must be eligible project costs and meet applicable Federal cost principles and uniform administrative requirements. Funds from other Federal financial assistance awards are

considered matching share funds only if authorized by statute, which may be determined by EDA's reasonable interpretation of the statute. *See* 13 CFR 300.3. The applicant must show that the matching share is committed to the project for the project period, is and will be available as needed, and is not conditioned or encumbered in any way that precludes its use consistent with the requirements of EDA investment assistance. *See* 13 CFR 301.5.

Application Submission Requirements: The applicant is advised to read carefully the instructions contained in the FFO announcement for this request for applications and in all forms contained in the appropriate application package. Sections III. and IV. of the FFO announcement contain important information on application requirements and timing considerations for submitting an application. It is the sole responsibility of the applicant to ensure that the appropriate preapplication or application package is complete and received by EDA.

Strategic Plan Grant Assistance: To apply for grant assistance to develop a Strategic Plan under section 276 of the Trade Act to help the Impacted Community adjust to trade impacts, the applicant must be determined to be an Impacted Community, and must complete and submit the following:

- Form ED–900 (*Application for Investment Assistance*).
- Form SF–424 (*Application for Federal Assistance*) (Note that if the applicant is submitting a full application for a Strategic Plan grant that contains information for EDA's Affirmative Determination, it must submit only one Form-SF–424. If, however, the applicant already has submitted a Form SF–424 in connection with a preapplication, it must submit a second Form SF–424 in connection with its full application. *See* section IV.C.2. of the FFO announcement.
- Form SF–424A (*Budget Information—Non-Construction Programs*).
- Form SF–424B (*Assurances—Non-Construction Programs*).
- Form CD–511 (*Certification Regarding Lobbying*).

The applicant also may be required to provide certain lobbying information using Form SF–LLL (*Disclosure of Lobbying Activities*). Form ED–900 provides detailed guidance to help the applicant assess whether Form SF–LLL is required and how to access the form.

Implementation Grant Assistance: To apply for an implementation grant *with* construction components, an applicant must be designated as an Impacted Community, have an EDA-approved Strategic Plan, and must complete and submit the following:

- Form ED–900 (*Application for Investment Assistance*).
- Form SF–424 (*Application for Federal Assistance*) (Note that if an applicant with an existing Strategic Plan is submitting a full application for a construction implementation grant that contains information for EDA's Affirmative Determination, it must submit only one Form-SF–424. If, however, the applicant already has submitted a Form SF–424 in connection with a preapplication, it must submit a second Form SF–424 in connection with its full application. *See* section IV.C.2. of the FFO announcement.)
- Form SF–424C (*Budget Information—Construction Programs*).
- Form SF–424D (*Assurances—Construction Programs*).
- Form CD–511 (*Certification Regarding Lobbying*).

To apply for assistance for an implementation grant *without* construction components, an applicant must be designated as an Impacted Community, have an EDA-approved Strategic Plan, and must complete and submit the following forms:

- Form ED–900 (*Application for Investment Assistance*).
- Form SF–424 (*Application for Federal Assistance*) (Note that if the community applicant with an existing Strategic Plan is submitting a full application for a non-construction implementation grant that contains information for EDA's Affirmative Determination, it must submit only one Form-SF–424. If, however, the applicant already has submitted a Form SF–424 in connection with a preapplication, it must submit a second Form SF–424 in connection with its full application. *See* section IV.C.2. of the FFO announcement.)
- Form SF–424A (*Budget Information—Non-Construction Programs*).
- Form SF–424B (*Assurances—Non-Construction Programs*).
- Form CD–511 (*Certification Regarding Lobbying*).

Applicants for both construction and non-construction implementation grants may be required to provide certain lobbying information using Form SF–LLL (*Disclosure of Lobbying Activities*). The Form ED–900 provides detailed guidance to help the applicant assess whether Form SF–LLL is required and how to access it.

Project Narrative at Item 15 of Form SF–424: As noted above, the Project Narrative included in applications as an attachment to item 15 in the Form SF–424 must include a discussion of the following:

- *Significance of Trade Impact.*— If the applicant has not already submitted a preapplication, the narrative must include all information for EDA's Affirmative Determination as set out at section III.B.4 of the FFO announcement. See section III.B.4. of the FFO announcement to ensure all necessary information is submitted.
- *Strategic Plan.*— If the application is for a grant to create a Strategic Plan or update an existing Strategic Plan, the narrative must discuss how the proposed plan will be consistent section 276 of the Trade Act and 13 CFR 313.6. *See also* sections III.C.1. and IV.A.1. of the FFO announcement.
- *Strategic Plan Implementation.*—If the application is for a grant to implement a Strategic Plan, the narrative must discuss how the proposed project is consistent with that plan and describe how the proposed funding will enable the applicant to carry out activities pursuant to that plan. *See also* sections III.C.2. and IV.A.2. of the FFO announcement.
- *Scope of Work and Anticipated Results.*—The narrative must discuss what the EDA funds will support and the anticipated results.
- *Project Fit with EDA Mission and Priorities.*—The narrative must discuss how the proposed project satisfies the evaluation criteria set out in section V.A of the FFO announcement.

If the applicant already has submitted a preapplication for EDA's Affirmative Determination, the Project Narrative may not exceed eight pages in length, double-spaced text, with approximately 200 to 300 words per page, including any attachments, but not including the cover page. The eight-page limit is an upper limit only; therefore, applicants should be as concise as possible.

Note that if an applicant is submitting a full application for a grant application that also contains all information for EDA's Affirmative Determination, the applicant must also include the information required under section III.B.4. of the FFO announcement. The information required for EDA's Affirmative Determination may not exceed an additional five pages in length, double-spaced text, with approximately 200 to 300 words per page. The five-page limit for this information is an upper limit only; and applicants should be concise as possible. Such an applicant still has the full eight pages for its full application Project Narrative as noted above.

Content and Form of the Form ED–900: Form ED–900 is required for a full grant application to develop a Strategic

Plan or implement a project in a Strategic Plan under the Community TAA Program. Based on whether an Impacted Community is submitting an application for a Strategic Plan grant or for an implementation grant, the following tables detail the sections and exhibits in Form ED–900 that an Impacted Community must complete.

Application for strategic plan grant	Required form ED–900 sections
On the initial page of Section A of Form ED–900, check that you are applying for Economic Adjustment Assistance. In section B(3)(C), check that you are applying under "Special need," and check "Negative effects of changing trade patterns" under the "Special need" paragraph.	Complete Sections A, C, E, and F and Exhibit C

Application for implementation grant	Required form ED–900 sections
On the initial page of Section A of Form ED–900, check that you are applying for Economic Adjustment Assistance. In section B(3)(C), check that you are applying under "Special need," and check "Negative effects of changing trade patterns" under the "Special need" paragraph.	Complete Sections A, B, and K, and Exhibit C. Also complete Sections M and Exhibits A, D, and E if the application has construction components and Section N if the application has only design/engineering requirements. Complete Section E if the application has no construction components.

Intergovernmental Review: Applications for assistance under EDA's programs are subject to the State review requirements imposed by Executive Order 12372, "*Intergovernmental Review of Federal Programs.*"

Evaluation and Selection Procedures

1. Technical Review

Staff in EDA's regional offices will undertake a technical review of each application to ensure that all required forms, signatures, and documentation are present and that the application is in compliance with the technical requirements set out in the FFO announcement, including requirements related to Cognizable Certifications and eligibility as a community. The technical review also will help determine if the proposed project is responsive to the objectives set out in the FFO. Applications that do not meet the technical requirements set out in the FFO will not be referred to the review panel.

2. Review Panel

Each regional office will convene a panel to review the merits of each application based on the criteria set forth in the FFO. The review panel will consist of Federal employees and may consist of others recommended by the Regional Director of the applicable regional office. At least three members of the review panel will be EDA staff members. The review panel will evaluate independently and rate and rank competitively all technically sufficient applications based on the evaluation criteria listed in section V.A. of the FFO announcement.

The review panel's rating and ranking of the applications will be presented to the regional office's Investment Review Committee (IRC). After reviewing the panel's process and recommendations, the IRC may either: (i) Forward the panel's ranked list, unaltered and in its entirety, to the Selecting Official (defined below); or (ii) identify any deficiencies in the review process and direct the review panel to begin the process anew. If the IRC directs the panel to re-evaluate the applications, the review panel will undertake the process again and submit a revised rating and ranking of the applications to the IRC.

3. Selecting Official and Selecting Factors

Under this notice, the Regional Director in each regional office is the Selecting Official. EDA expects to fund the highest ranking applications. The Selecting Official will normally follow the recommendations of the review panel; however, the Selecting Official may decide not to make a selection, or may select an application out of rank order for several reasons, including:

a. A determination that the application better meets the overall objectives of sections 271 through 277 of the Trade Act (19 U.S.C. 2371—2371f);

b. Relative economic distress and financial capability of a community;

c. Availability of program funding;

d. Geographic balance in distribution of program funds;

e. Balanced funding for a diverse group of institutions, to include smaller and rural institutions, which may form part of a broader consortium to serve diverse populations and areas within the regional office's territory; or

f. The applicant's performance under previous Federal financial assistance awards.

If the Selecting Official makes a selection out of rank order, the Selecting Official will document the rationale for the decision in writing. As part of the selection process, EDA reserves the right to seek clarifications in writing from applicants for those applications deemed to have highest merit in order to facilitate the selection process. *See also* section V. of the FFO announcement.

Funding Priorities: EDA will give priority to applications for Strategic Plans or implementation assistance that will render the maximum amount of economic revitalization based on satisfaction of one or more of the following core criteria (investment applications that meet more than one core criterion will be given more favorable consideration):

1. *Investments to small and medium-sized communities (20%).* Priority will be given to an application submitted by an Impacted Community that is a small- or medium-sized community (defined as a community with a population of 100,000 or less). *See* section 275(e) of the Trade Act (19 U.S.C. 2371d) and 13 CFR 313.8(b).

2. *Investments to assist the most severely impacted communities (20%).* Priority will be given to an application based upon the extent to which a proposed project effectively responds to the severity of trade impact within an Impacted Community. For the purposes of evaluation, EDA considers counties significantly to severely impacted if they meet the thresholds outlined below:

- Significantly Impacted: More than 8.25 workers impacted in connection with TAA Cognizable Certifications per 1,000 workers in the CLF; or
- Severely Impacted: More than 28 workers impacted in connection with TAA Cognizable Certifications per 1,000 workers in the CLF.

See also 13 CFR 313.6(d) and 313.7(d)(2).

3. *Investments that have a high return on investment. (20%).* Priority will be given to an application that yields a high return on investment, as indicated by the extent to which it:

• Leads to the creation/retention of good jobs for the community. This is defined as greater than or equal to the average wage in the county. The Bureau of Labor Statistic's Web site at *http://www.bls.gov/data/#wages* has data available for this analysis.

• Leverages public-private partnerships, for example, as evident by private sector involvement and/or private sector funding in the project.

• Evidences best-practices in project management, for example, by demonstrating a feasible, cost-effective budget and a specific, deadline driven project timeline.

4. *Investments that Support Regionalism, Innovation, and Entrepreneurship (20%).* Priority will be given to an application that strengthens regional cluster strategies and supports innovation and entrepreneurship, as indicated by the extent to which the investment:

• Builds upon or extends existing planning documents, such as a CEDS, or other Federal, State, regional, or local development plans.

• Links clearly to a leading or emerging regional cluster. This may be measured by the extent the investment supports an industry that has a location quotient greater than one. Applicants may find more information on location quotients at the Bureau of Labor Statistic's site at *http://data.bls.gov/LOCATION_QUOTIENT/servlet/lqc.ControllerServlet.* This also may be demonstrated by:

○ A geographic concentration of an industry compared to the State or nation;

○ Increasing regional employment in that industry; or

○ Increasing numbers of firms in the relevant cluster.

• Fosters commercialization in technology. This could be shown by increasing technology transfer at an institution of higher education or spinning off new technology, *etc.*

5. *Investments that Support Global Trade/Competitiveness (15%).* Priority will be given to an application that supports global trade and competitiveness, as indicated by the extent to which the investment:

• Supports existing "high growth/high potential companies" or those that have the ability to create "high growth/high potential companies," which are defined as companies with fewer than 500 employees whose sales doubled in four years or less; or

• Supports businesses or clusters with significant export potential.

6. *Investments that grow the "Green Economy" (5%).* Priority will be given to an application whose objectives support the "green economy." Such projects would:

• Promote renewable energy, energy efficiency, and/or reuse, recycling, or restoration that result in a green end-product (for example, a renewable energy commercialization center);

• Green an existing process or function (for example, implementing sustainable manufacturing practices); or

• Result in a green building (for example, a structure certified under the U.S. Green Building Council's Leadership in Energy and Environmental Design (LEED) system).

Applications will be evaluated to the extent they produce identified green project benefits; for example renewable energy capacity per year, carbon emission offsets, overall energy savings, or third-party verified green building certifications.

The Department of Commerce Pre-Award Notification Requirements for Grants and Cooperative Agreements: The administrative and national policy requirements for all Department of Commerce awards, contained in the *Department of Commerce Pre-Award Notification Requirements for Grants and Cooperative Agreements,* published in the **Federal Register** on February 11, 2008 (73 FR 7696), are applicable to this competitive solicitation.

Paperwork Reduction Act: This document contains collection-of-information requirements subject to the Paperwork Reduction Act (PRA). The use of Form ED–900 (*Application for Investment Assistance*) has been approved by the Office of Management and Budget (OMB) under the Control Number 0610–0094. The use of Forms SF–424 (*Application for Financial Assistance*), SF–424A (*Budget Information—Non-Construction Programs*), SF–424B (*Assurances—Non-Construction Programs*), SF–424C (*Budget Information—Construction Programs*), SF–424D (*Assurances—Construction Programs*), and Form SF–LLL (*Disclosure of Lobbying Activities*) has been approved under OMB Control Numbers 4040–0004, 0348–0044, 4040–0007, 4040–0008, 4040–0009, and 0348–0046 respectively. The Form CD–346 (*Applicant for Funding Assistance*) is approved under OMB Control Number 0605–0001. Notwithstanding any other provision of law, no person is required to respond to, nor shall any person be subject to a penalty for failure to comply with, a collection of information subject to the requirements of the PRA unless that collection of information displays a currently valid OMB Control Number.

Executive Order 12866 (Regulatory Planning and Review): This notice has been determined to be not significant for purposes of Executive Order 12866.

Executive Order 13132 (Federalism): It has been determined that this notice does not contain policies with Federalism implications as that term is defined in Executive Order 13132.

Administrative Procedure Act/Regulatory Flexibility Act: Prior notice and an opportunity for public comments are not required by the Administrative Procedure Act or any other law for rules concerning grants, benefits, and contracts (5 U.S.C. 553(a)(2)). Because notice and opportunity for comment are not required pursuant to 5 U.S.C. 553 or any other law, the analytical requirements of the Regulatory Flexibility Act (5 U.S.C. 601 *et seq.*) are inapplicable.

Therefore, a regulatory flexibility analysis has not been prepared.

Dated: January 6, 2010.

Brian P. McGowan,

Deputy Assistant Secretary of Commerce for Economic Development and Chief Operating Officer.

[FR Doc. 2010–273 Filed 1–8–10; 8:45 am]

BILLING CODE 3510–24–P

COMMITTEE FOR PURCHASE FROM PEOPLE WHO ARE BLIND OR SEVERELY DISABLED

Procurement List: Proposed Addition and Deletions

AGENCY: Committee for Purchase From People Who Are Blind or Severely Disabled.

ACTION: Proposed addition to and deletions from Procurement List.

SUMMARY: The Committee is proposing to add to the Procurement List a product to be furnished by a nonprofit agency employing persons who are blind or have other severe disabilities, and to delete services previously furnished by such agencies.

COMMENTS MUST BE RECEIVED ON OR BEFORE: February 8, 2010.

ADDRESSES: Committee for Purchase From People Who Are Blind or Severely Disabled, Jefferson Plaza 2, Suite 10800, 1421 Jefferson Davis Highway, Arlington, Virginia 22202–3259.

FOR FURTHER INFORMATION CONTACT: Patricia Briscoe, *Telephone:* (703) 603–7740, *Fax:* (703) 603–0655, or *e-mail CMTEFedReg@AbilityOne.gov.*

SUPPLEMENTARY INFORMATION: This notice is published pursuant to 41 U.S.C 47(a)(2) and 41 CFR 51–2.3. Its purpose is to provide interested persons an opportunity to submit comments on the proposed actions.

Addition

If the Committee approves the proposed addition, the entities of the Federal Government identified in this notice for each product will be required to procure the product listed below from the nonprofit agency employing persons who are blind or have other severe disabilities.

Regulatory Flexibility Act Certification

I certify that the following action will not have a significant impact on a substantial number of small entities. The major factors considered for this certification were:

1. If approved, the action will not result in any additional reporting, recordkeeping or other compliance requirements for small entities other than the small organizations that will provide the product to the Government.

2. If approved, the action will result in authorizing small entities provide the product to the Government.

3. There are no known regulatory alternatives which would accomplish the objectives of the Javits-Wagner-O'Day Act (41 U.S.C. 46–48c) in connection with the product proposed for addition to the Procurement List.

Comments on this certification are invited. Commenters should identify the statement(s) underlying the certification on which they are providing additional information.

End of Certification

The following product is proposed for addition to the Procurement List for production by the nonprofit agency listed:

Product

NSN: 8540–00–266–9898—Paper, Doily.
NPA: L.C. Industries for the Blind, Inc., Durham, NC.
Contracting Activity: Federal Acquisition Service, GSA/FSS OFC SUP CTR—Paper Products, New York, NY.
Coverage: B-List for the broad Government requirement as aggregated by the General Services Administration.

Deletions

Regulatory Flexibility Act Certification

I certify that the following action will not have a significant impact on a substantial number of small entities. The major factors considered for this certification were:

1. If approved, the action will not result in additional reporting, recordkeeping or other compliance requirements for small entities.

2. If approved, the action may result in authorizing small entities to provide the services to the Government.

3. There are no known regulatory alternatives which would accomplish the objectives of the Javits-Wagner-O'Day Act (41 U.S.C. 46–48c) in connection with the services proposed for deletion from the Procurement List.

End of Certification

The following services are proposed for deletion from the Procurement List:

Services

Service Type/Location: Grounds Maintenance, Federal Aviation Administration, 1100 South Service Road, Airway Facilities Sector, Atlanta, GA.
NPA: WORKTEC, Jonesboro, GA.
Contracting Activity: Dept of Trans, Federal Aviation Administration, College Park, GA.
Service Type/Location: Food Service Attendant, Jacksonville Air National Guard, 14300 Fang Drive, Jacksonville, FL.
NPA: GINFL Services, Inc., Jacksonville, FL.
Contracting Activity: Dept of the Army, XRA W7M2 USPFO Activity FL ARNG, ST Augustine, FL.
Service Type/Location: Disposal Support Services, Eglin Air Force Base, East of Memorial Trail (excluding the airfield), Eglin, FL.
NPA: Lakeview Center, Inc., Pensacola, FL.
Contracting Activity: Defense Logistics Agency, DLA Support Services—DSS, Fort Belvoir, VA.

Patricia Briscoe,

Deputy Director, Business Operations.

[FR Doc. 2010–157 Filed 1–8–10; 8:45 am]

BILLING CODE 6353–01–P

COMMITTEE FOR PURCHASE FROM PEOPLE WHO ARE BLIND OR SEVERELY DISABLED

Procurement List Additions and Deletions

AGENCY: Committee for Purchase From People Who Are Blind or Severely Disabled.

ACTION: Additions to and deletions from Procurement List.

SUMMARY: This action adds to the Procurement List services to be furnished by nonprofit agencies employing persons who are blind or have other severe disabilities, and deletes from the Procurement List products and services previously furnished by such agencies.

DATES: *Effective Date:* 2/8/2010.

ADDRESSES: Committee for Purchase From People Who Are Blind or Severely Disabled, Jefferson Plaza 2, Suite 10800, 1421 Jefferson Davis Highway, Arlington, Virginia 22202–3259.

FOR FURTHER INFORMATION CONTACT: Patricia Briscoe, Telephone: (703) 603–7740, Fax: (703) 603–0655, or e-mail *CMTEFedReg@AbilityOne.gov.*

SUPPLEMENTARY INFORMATION:

Additions

On 11/6/2009 (74 FR 57453–57454), the Committee for Purchase From People Who Are Blind or Severely Disabled published notice of proposed additions to the Procurement List.

After consideration of the material presented to it concerning capability of qualified nonprofit agencies to provide the services and impact of the additions on the current or most recent contractors, the Committee has determined that the services listed below are suitable for procurement by the Federal Government under 41 U.S.C. 46–48c and 41 CFR 51–2.4.

Regulatory Flexibility Act Certification

I certify that the following action will not have a significant impact on a substantial number of small entities. The major factors considered for this certification were:

1. The action will not result in any additional reporting, recordkeeping or other compliance requirements for small entities other than the small organizations that will furnish the services to the Government.

2. The action will result in authorizing small entities to furnish the services to the Government.

3. There are no known regulatory alternatives which would accomplish the objectives of the Javits-Wagner-O'Day Act (41 U.S.C. 46–48c) in connection with the services proposed for addition to the Procurement List.

End of Certification

Accordingly, the following services are added to the Procurement List:

Services

Service Type/Location: Janitorial Services, Jamestown Service Center, 8430 Country Club Street, Jamestown, ND.
NPA: Alpha Opportunities, Inc., Jamestown, ND.
Contracting Activity: Department of Energy, Headquarters Procurement Services, Washington, DC.
Service Type/Locations: Parts Machining Service, 515 N. 51st Ave #130, Phoenix, AZ.
NPA: Arizona Industries for the Blind, Phoenix, AZ; 5316 West State Street, Milwaukee, WI.
NPA: Wiscraft Inc.—Wisconsin Enterprises for the Blind, Milwaukee, WI; 2601 South Plum, Seattle, WA.
NPA: The Lighthouse for the Blind, Inc. (Seattle Lighthouse), Seattle, WA.
Contracting Activity: Defense Logistics Agency, Defense Supply Center

Philadelphia, Philadelphia, PA.

Deletions

On 10/23/2009 (74 FR 54783–54784) and 11/6/2009 (74 FR 57453–57454), the Committee for Purchase From People Who Are Blind or Severely Disabled published notices of proposed deletions from the Procurement List.

After consideration of the relevant matter presented, the Committee has determined that the products and services listed below are no longer suitable for procurement by the Federal Government under 41 U.S.C. 46–48c and 41 CFR 51–2.4.

Regulatory Flexibility Act Certification

I certify that the following action will not have a significant impact on a substantial number of small entities. The major factors considered for this certification were:

1. The action will not result in additional reporting, recordkeeping or other compliance requirements for small entities.

2. The action may result in authorizing small entities to furnish the products and services to the Government.

3. There are no known regulatory alternatives which would accomplish the objectives of the Javits-Wagner-O'Day Act (41 U.S.C. 46–48c) in connection with the products and services deleted from the Procurement List.

End of Certification

Accordingly, the following products and services are deleted from the Procurement List:

Products

Business Cards

NSN: P.S. NIB 49.
NSN: P.S. NIB 50.
NSN: P.S. NIB 51.
NPA: The Lighthouse for the Blind, Inc. (Seattle Lighthouse), Seattle, WA.
Contracting Activity: U.S. Postal Service, Washington, DC.
NSN: 7045–01–483–7450—Disk File 40, 3½″ Disks.
NSN: 7045–01–483–7841—Visionguard Anti-Glare Screen.
NSN: 7045–01–483–7842—MixMedia Tower.
NSN: 7045–01–483–9271—CD Jewel Case, Gold Tray, Five Pack.
NSN: 7045–01–483–9272—CD Jewel Case, Gold Tray, Ten Pack.
NSN: 7045–01–483–9273—CD Radial Cleaner.
NSN: 7045–01–483–9274—CD–ROM Drive Clean.
NSN: 7045–01–483–9275—CD Fast Wipes 20.
NSN: 7045–01–483–9276—CD–ROM Drive Clean.
NSN: 7045–01–483–9277—CD Scratch Repair System.
NSN: 7045–01–483–9407—CD Jewel Case, Standard, Three Pack.
NPA: Wiscraft Inc.—Wisconsin Enterprises for the Blind, Milwaukee, WI.
Contracting Activity: GSA/FSS OFC SUP CTR—Paper Products, New York, NY.
NSN: 7510–00–455–7339—Fastener, Paper.
NPA: Delaware County Chapter, NYSARC, Inc., Walton, NY.
Contracting Activity: GSA/FSS OFC SUP CTR—Paper Products, New York, NY.

Candle, Illuminating

NSN: 6260–00–161–4296.
NPA: Concho Resource Center, San Angelo, TX.
Contracting Activity: GSA/FAS Southwest Supply Center (QSDAC), Fort Worth, TX.

Line, Tent, Manila

NSN: 8340–00–252–2269.
NPA: ASPIRO, Inc., Green Bay, WI.
Contracting Activity: Defense Supply Center Philadelphia, Philadelphia, PA.

Services

Service Type/Location: Janitorial/Custodial, U.S. Army Reserve Center, OMS, RD 8 Box 282 A, Kittanning, PA.
NPA: Rehabilitation Center and Workshop, Inc., Greensburg, PA.
Contracting Activity: Dept of the Army, XR W6BA ACA Army Reserve Cont Ctr, Ft Dix, NJ.
Service Type/Location: Janitorial/Custodial, Internal Revenue Service, 11631 Caroline Road, Philadelphia, PA.
NPA: A.C.E. Industries, Inc., Exton, PA.
Contracting Activity: Dept of Treas, Internal Revenue Service, OFC of Procurement Operations, Oxon Hill, MD.
Service Type/Location: Janitorial/Custodial, Willow Grove Naval Air Station, Willow Grove, PA.
NPA: A.C.E. Industries, Inc., Exton, PA.
Contracting Activity: Dept of the Navy, U.S. Fleet Forces Command, Norfolk, VA.

Patricia Briscoe,

Deputy Director, Business Operations.

[FR Doc. 2010–158 Filed 1–8–10; 8:45 am]

BILLING CODE 6353–01–P

CONSUMER PRODUCT SAFETY COMMISSION

[CPSC Docket No. 10–C0002]

RC2 Corporation, Provisional Acceptance of a Settlement Agreement and Order

AGENCY: Consumer Product Safety Commission

ACTION: Notice

SUMMARY: It is the policy of the Commission to publish settlements which it provisionally accepts under the Consumer Product Safety Act in the **Federal Register** in accordance with the terms of 16 CFR 1118.20(e). Published below is a provisionally-accepted Settlement Agreement with RC2 Corporation, containing a civil penalty of $1,250,000.00.

DATES: Any interested person may ask the Commission not to accept this agreement or otherwise comment on its contents by filing a written request with the Office of the Secretary by January 26, 2010.

ADDRESSES: Persons wishing to comment on this Settlement Agreement should send written comments to the Comment 10–C0002, Office of the Secretary, Consumer Product Safety Commission, 4330 East West Highway, Room 502, Bethesda, Maryland 20814–4408.

FOR FURTHER INFORMATION CONTACT: M. Reza Malihi, Trial Attorney, Division of Compliance, Office of the General Counsel, Consumer Product Safety Commission, 4330 East West Highway, Bethesda, Maryland 20814–4408; telephone (301) 504–7733.

SUPPLEMENTARY INFORMATION: The text of the Agreement and Order appears below.

Dated: January 6, 2010.

Todd A. Stevenson,

Secretary.

Settlement Agreement

1. In accordance with 16 CFR 1118.20, RC2 Corporation and the staff ("Staff") of the United States Consumer Product Safety Commission ("CPSC" or the "Commission") enter into this Settlement Agreement ("Agreement"). The Agreement and the incorporated attached Order ("Order") settle the Staff's allegations set forth below.

Parties

2. The Commission is an independent federal regulatory agency established pursuant to, and responsible for the enforcement of, the Consumer Product Safety Act, 15 U.S.C. 2051—2089 ("CPSA").

3. RC2 Corporation is a corporation organized and existing under the laws of the state of Delaware, with principal offices located in Oak Brook, Illinois. At all times relevant hereto, RC2 Corporation designed, imported and sold toys and children's products. "RC2" as used in this Agreement means RC2 Corporation and its wholly owned subsidiary Learning Curve Brands, Inc. and their officers, directors, shareholders and employees.

Staff Allegations

4. Between January 2005 and April 2007, RC2 commissioned one of its dedicated contract manufacturers, Overseas Winner Limited ("OW"), to manufacture in China approximately 1,506,900 units of various Thomas & Friends™ Wooden Railway toys for sale in the United States. The toys consisted

of wooden vehicles, buildings and other train set components for young children, comprising 26 distinct component styles packaged in 23 retail SKU's (collectively, the "TWR Toys"). Between January 2005 and May 2007, RC2 imported into the United States approximately 1,506,900 units of the TWR Toys, and in turn, shipped them to its retail and other customers. The TWR Toys were sold or offered for sale to consumers primarily at toy stores and various retailers nationwide, and secondarily through RC2's e-commerce websites or as 'sub-components' of retail items distributed independently of RC2, from January 2005 through June 2007, for between $10 and $70 per unit. The TWR Toys represented approximately 4% of total wooden railway toy units sold by RC2 within the U.S. market.

5. Between March 2003 and April 2007, RC2 commissioned OW and another of its dedicated contract manufacturers, 3i Corporation, Ltd., to manufacture in China certain of 5 other component styles from Thomas & Friends™ Wooden Railway toys product line, comprising approximately an additional 200,000 units, for sale in the United States (collectively, the "Additional TWR Toys"). Between March 2003 and September 2007, RC2 imported into the United States approximately 200,000 units of the Additional TWR Toys, and in turn, shipped them to its retail and other customers. The Additional TWR Toys were sold or offered for sale to consumers primarily at toy stores and various retailers nationwide, and secondarily through RC2's e-commerce Web sites or as 'sub-components' of retail items distributed independently of RC2, from March 2003 to September 2007, for between $10 and $40 per unit.

6. The TWR Toys and Additional TWR Toys (collectively, "Subject Products") are "consumer product(s)," and, at all times relevant hereto, RC2 was a "manufacturer" and a "retailer" of those consumer products, which were "distributed in commerce," as those terms are defined in CPSA sections 3(a)(3), (5), (8), (11) and (13), 15 U.S.C. § 2052(a)(3), (5), (8), (11) and (13).

7. The Subject Products are articles intended to be entrusted to or for use by children, and, therefore, are subject to the requirements of the Commission's Ban of Lead-Containing Paint and Certain Consumer Products Bearing Lead-Containing Paint, 16 CFR Part 1303 (the "Lead Paint Ban"). Under the Lead Paint Ban, toys and other children's articles must not bear "lead-containing paint," defined as paint or other surface coating materials whose lead content is more than 0.06 percent of the weight of the total nonvolatile content of the paint or the weight of the dried paint film. 16 CFR 1303.2(b)(1)

8. On March 29, 2007, RC2 was notified by one of its U.S. retail customers that a TWR Toy supplied by RC2, specifically the Thomas & Friends Oval Set (Product # LC99561), had failed testing that demonstrated its paint or other surface coatings contained levels of lead in excess of the permissible 0.06 percent limit set forth in the Lead Paint Ban. The Oval Set (Product # LC99561) was produced at OW, which was at the time one of two contract manufacturers of the Thomas & Friends™ Wooden Railway toys product line, both based in China. On the same day, RC2 inventory of the Oval Set (Product # LC99561) was placed on hold and an inventory audit was conducted to identify quantities per production-date code on hand. An internal investigation by RC2, in consultation with its contract manufacturers and pertinent customers, then ensued. It involved extensive testing of the *Thomas & Friends*™ Wooden Railway toys product line for the presence of lead, including tests conducted by independent certified labs in China and the U.S. on finished toys as well as liquid paints and solvents used the manufacturing process.

9. The internal investigation yielded multiple failing test results demonstrating that dozens of TWR Toy samples bore or contained paint or other surface coatings with lead levels in excess of the permissible 0.06 percent (600 ppm) limit set forth in the Lead Paint Ban. Based upon information that primarily emerged during this investigation period, RC2 determined that five PMS (Pantone Matching System®) surface paint colors applied to certain finished product components had failed at least one test for the presence of lead in excess of the permissible 0.06 percent limit set forth in the Lead Paint Ban; a sixth color, yellow, had failed testing prior to the investigation period and then passed a subsequent test, but ultimately was included among the non-compliant paint colors as a precautionary measure. RC2 also determined that all the affected units composing the TWR Toys had been manufactured by OW rather than by RC2's other Chinese contract manufacturer. RC2 cross-referenced each of the failing colors with the colors of paint used on each toy component, thereby identifying 26 distinct component styles which used at least one of these six colors, and thus ascertained the scope of affected models and product units comprising the TWR Toys for recall purposes.

10. After RC2 reported this information to CPSC, on June 13, 2007, the Commission and RC2 announced a recall of about 1,500,000 units of the TWR Toys because "Surface paints on the recalled products contain lead. Lead is toxic if ingested by young children and can cause adverse health effects."

11. Throughout the summer of 2007, RC2 and other entities with which it does business continued with additional testing of items from the Thomas & Friends™ Wooden Railway toys product line. By supplemental reports submitted to CPSC between August 17 and September 20, 2007, RC2 reported that it had obtained information which reasonably supports the conclusion that five additional toys from this product line have certain specific colors of paint applied to them that "may contain" levels of lead in excess of the permissible 0.06 percent limit set forth in the Lead Paint Ban. The continued investigation yielded further failing test reports demonstrating that additional samples bore or contained paint or other surface coatings with lead levels in excess of the permissible 0.06 percent (600 ppm) limit set forth in the Lead Paint Ban. In this way, RC2 determined the scope of affected models and product units comprising the Additional TWR Toys for recall purposes.

12. On September 26, 2007, the Commission and RC2 announced that the original TWR Toys recall was being expanded in order to include about 200,000 units of the Additional TWR Toys because "Surface paints on the toys can contain excessive levels of lead, violating the federal lead paint standard."

13. RC2 reportedly severed its business relationship with OW completely in June 2007, soon after the original TWR Toys recall announcement. RC2 reportedly already had ceased manufacturing any of the Thomas & Friends™ Wooden Railway toys at 3i in November 2006.

14. Although at the time of each of the aforementioned recalls RC2 reported no incidents or injuries associated with the presence of excessive lead in the paint or other surface coatings of the Subject Products, it subsequently learned of a number of allegations of such incidents and injuries, some of which became the subject of claims and lawsuits against it. RC2 failed to take adequate action to ensure that the Subject Products complied with the Lead Paint Ban. This failure created a risk of lead poisoning and adverse health effects to children. Lead is toxic if ingested by young children and can cause adverse health effects.

15. The Subject Products constitute "banned hazardous products" under CPSA section 8 and the Lead Paint Ban, 15 U.S.C. 2057 and 16 CFR 1303.1(a)(1), 1303.4(b), in that they bear or contain paint or other surface coating materials whose lead content exceeds the permissible limit of 0.06 percent of the weight of the total nonvolatile content of the paint or the weight of the dried paint film.

16. Between March 2003 and September 2007, RC2 sold, manufactured for sale, offered for sale, distributed in commerce, or imported into the United States, or caused one or more of such acts, with respect to the Subject Products, in violation of section 19(a)(1) of the CPSA, 15 U.S.C. 2068(a)(1). RC2 committed these prohibited acts "knowingly," as that term is defined in section 20(d) of the CPSA, 15 U.S.C. 2069(d).

17. Pursuant to section 20 of the CPSA, 15 U.S.C. 2069, RC2 is subject to civil penalties for the aforementioned violations.

Responsive Allegations of RC2

18. RC2 denies that it violated section 19(a)(1) of the CPSA, 15 U.S.C. 2068(a)(1), and further denies that it did so "knowingly" (as defined in section 20(d) of the CPSA, 15 U.S.C. 2069(d)).

Agreement of the Parties

19. Under the CPSA, the Commission has jurisdiction over this matter and over RC2.

20. The parties enter into the Agreement for settlement purposes only. The Agreement does not constitute an admission by RC2, or a determination by the Commission, that RC2 knowingly violated the CPSA.

21. In settlement of the Staff's allegations, RC2 Corporation shall pay a civil penalty in the total amount of One Million Two Hundred Fifty Thousand ($1,250,000.00) dollars within twenty (20) calendar days of service of the Commission's final Order accepting the Agreement. This payment shall be made by check payable to the order of the United States Treasury.

22. The Commission will not seek or initiate any enforcement action against RC2 for civil penalties, based upon information known to CPSC through the date of final acceptance of this Agreement, for possible violations of (i) section 19(a)(4) of the CPSA, 15 U.S.C. 2068(a)(4), regarding CPSC File No. RP070347, associated with Releases #07–212 and #07–308; (ii) sections 19(a)(1) and 19(a)(4) of the CPSA, 15 U.S.C. § 2068(a)(1) and (a)(4), regarding CPSC File No. RP070524, associated with Release #07–310, and CPSC File No. RP070572, associated with Release #08–119; and (iii) section 19(a)(4) of the CPSA, 15 U.S.C. 068(a)(4), regarding CPSC File No. RP080126, associated with Release #08–120. The Commission's agreement not to seek penalties, as stated herein, will not relieve RC2 from the continuing duty to report to CPSC any new, additional or different information as required by CPSA section 15(b), 15 U.S.C. 2064(b) and the regulations at 16 CFR Part 1115, regarding these matters.

23. Upon the Commission's provisional acceptance of the Agreement, the Agreement shall be placed on the public record and published in the **Federal Register** in accordance with the procedures set forth in 16 CFR 1118.20(e). In accordance with 16 CFR 1118.20(f), if the Commission does not receive any written request not to accept the Agreement within fifteen (15) days, the Agreement shall be deemed finally accepted on the sixteenth (16th) day after the date it is published in the **Federal Register.**

24. Upon the Commission's final acceptance of the Agreement and issuance of the final Order, RC2 knowingly, voluntarily, and completely waives any rights it may have in this matter to the following: (1) An administrative or judicial hearing; (2) judicial review or other challenge or contest of the validity of the Commission's Order or actions; (3) a determination by the Commission of whether RC2 failed to comply with the CPSA and its underlying regulations; (4) a statement of findings of fact and conclusions of law; and (5) any claims under the Equal Access to Justice Act.

25. The Commission may publicize the terms of the Agreement and Order.

26. The Agreement and Order shall apply to, and be binding upon, RC2 and each of its successors and assigns.

27. The Commission issues the Order under the provisions of the CPSA, and violation of the Order may subject those referenced in paragraph 26 to appropriate legal action.

28. The Agreement may be used in interpreting the Order. Understandings, agreements, representations, or interpretations apart from those contained in the Agreement and Order may not be used to vary or contradict its terms. The Agreement shall not be waived, amended, modified, or otherwise altered, except in a writing that is executed by the party against whom such waiver, amendment, modification, or alteration is sought to be enforced.

29. If any provision of the Agreement and Order is held to be illegal, invalid, or unenforceable under present or future laws effective during the terms of the Agreement and Order, such provision shall be fully severable. The balance of the Agreement and Order shall remain in full force and effect, unless the Commission and RC2 agree that severing the provision materially affects the purpose of the Agreement and Order.

RC2 Corporation

Dated: September 18, 2009

Curt Stoelting,

Chief Executive Officer, RC2 Corporation.

Dated: *September 17, 2009.*

Michael J. Gidding, Esq.,

Brown & Gidding, P.C., 3201 New Mexico Avenue, NW., Suite 242, Washington, DC 20016, Counsel for RC2 Corporation.

U.S. Consumer Product Safety Commission Staff.

Cheryl A. Falvey,

General Counsel, Office of the General Counsel.

Ronald G. Yelenik,

Assistant General Counsel, Office of the General Counsel.

Dated: *November 2, 2009.*

M. Reza Malihi,

Trial Attorney, Division of Compliance, Office of the General Counsel.

Order

Upon consideration of the Settlement Agreement entered into between RC2 Corporation ("RC2"), and the U.S. Consumer Product Safety Commission ("Commission") staff, and the Commission having jurisdiction over the subject matter and over RC2, and it appearing that the Settlement Agreement and Order are in the public interest, it is

Ordered, that the Settlement Agreement be, and hereby is, accepted; and it is

Further ordered, that RC2 shall pay a civil penalty in the amount of One Million Two Hundred Fifty Thousand ($1,250,000.00) dollars within twenty (20) calendar days of service of the Commission's final Order accepting the Agreement. The payment shall be made by check payable to the order of the United States Treasury. Upon the failure of RC2 to make the foregoing payment when due, interest on the unpaid amount shall accrue and be paid by RC2 at the federal legal rate of interest set forth at 28 U.S.C. 1961(a) and (b).

Provisionally accepted and provisional Order issued on the 5th day of January 2010.

By order of the commission.

Todd A. Stevenson,

Secretary, U.S. Consumer Product Safety Commission.

[FR Doc. 2010–282 Filed 1–8–10; 8:45 am]

BILLING CODE 6355–01–P

CORPORATION FOR NATIONAL AND COMMUNITY SERVICE

Information Collection; Submission for OMB Review, Comment Request

AGENCY: Corporation for National and Community Service.

ACTION: Notice.

SUMMARY: The Corporation for National and Community Service (hereinafter the "Corporation"), has submitted a public information collection request (ICR) entitled the Longitudinal Evaluation of AmeriCorps Members: Respondent Tracking to the Office of Management and Budget (OMB) for review and approval in accordance with the Paperwork Reduction Act of 1995, Public Law 104–13 (44 U.S.C. Chapter 35). Copies of this ICR, with applicable supporting documentation, may be obtained by calling the Corporation for National and Community Service, Lillian Dote at (215) 597–2861. Individuals who use a telecommunications device for the deaf (TTY–TDD) may call (202) 606–3472 between 8:30 a.m. and 5 p.m. eastern time, Monday through Friday.

ADDRESSES: Comments may be submitted, identified by the title of the information collection activity, to the Office of Information and Regulatory Affairs, Attn: Ms. Sharon Mar, OMB Desk Officer for the Corporation for National and Community Service, by any of the following two methods within 30 days from the date of publication in this **Federal Register**

(1) *By fax to:* (202) 395–6974, Attention: Ms. Sharon Mar, OMB Desk Officer for the Corporation for National and Community Service; and

(2) *Electronically by e-mail to: smar@omb.eop.gov.*

SUPPLEMENTARY INFORMATION: The OMB is particularly interested in comments which:

- Evaluate whether the proposed collection of information is necessary for the proper performance of the functions of the Corporation, including whether the information will have practical utility;
- Evaluate the accuracy of the agency's estimate of the burden of the proposed collection of information, including the validity of the methodology and assumptions used;
- Propose ways to enhance the quality, utility, and clarity of the information to be collected; and
- Propose ways to minimize the burden of the collection of information on those who are to respond, including through the use of appropriate automated, electronic, mechanical, or other technological collection techniques or other forms of information technology, e.g., permitting electronic submissions of responses.

Comments

A 60-day public comment Notice was published in the **Federal Register** on October 16, 2009. This comment period ended December 16, 2009. No public comments were received from this Notice.

Description: The Corporation is seeking approval of the Longitudinal Evaluation of AmeriCorps Members: Respondent Tracking. The proposed locating effort will be completed by longitudinal sample members only, including former AmeriCorps members and their counterparts in the comparison group. The study includes participants from AmeriCorps State and National and the AmeriCorps National Civilian Community Corps (NCCC).

Type of Review: Renewal.

Agency: Corporation for National and Community Service.

Title: Longitudinal Evaluation of AmeriCorps Members: Respondent Tracking.

OMB Number: 3045–0070.

Agency Number: None.

Affected Public: Participants in the Longitudinal Evaluation of AmeriCorps Members.

Total Respondents:

Treatment Group: 1,781 former AmeriCorps members.

Comparison Group: 1,539 individuals.

Total: 3,320 respondents.

Frequency: Once every six months.

Average Time per Response: 3 minutes.

Estimated Total Burden Hours: 332 hours.

Total Burden Cost (capital/startup): None.

Total Burden Cost (operating/maintenance): None.

Dated: December 28, 2009.

Susannah Washburn,

Senior Advisor, Office of Research and Policy Development.

[FR Doc. 2010–169 Filed 1–8–10; 8:45 am]

BILLING CODE 6050–$$–P

DEPARTMENT OF DEFENSE

Department of the Army; Corps of Engineers

Notice of Availability of Final Environmental Impact Statement for the Proposed Construction of the Western Wake Regional Wastewater Management Facilities; Which Includes Regional Wastewater Pumping, Conveyance, Treatment, and Discharge Facilities To Serve the Towns of Apex, Cary, Holly Springs and Morrisville, as Well as the Wake County Portion of Research Triangle Park (RTP South) in North Carolina

AGENCY: Department of the Army, U.S. Army Corps of Engineers, DoD.

ACTION: Notice; extension of comment period.

SUMMARY: The comment period for the Final Environmental Impact Statement for the proposed construction of the Western Wake Regional Wastewater Management Facilities, in Wake and Chatham Counties, NC published in the **Federal Register** on Friday, December 18, 2009 (74 FR 67180), required comments be submitted 33 days (January 19, 2010) following publication in the **Federal Register**. The comment period has been extended to 54 days (February 9, 2010). This is because the initial Web version of the Final Environmental Impact Statement had problems with the Web links. The web version was corrected on December 28, 2009.

FOR FURTHER INFORMATION CONTACT: Henry Wicker, Telephone (910) 251–4930.

Brenda S. Bowen,

Army Federal Register Liaison Officer.

[FR Doc. 2010–237 Filed 1–8–10; 8:45 am]

BILLING CODE 3720–58–P

DEPARTMENT OF EDUCATION

Submission for OMB Review; Comment Request

AGENCY: Department of Education.

SUMMARY: The Acting Director, Information Collection Clearance Division, Regulatory Information Management Services, Office of Management invites comments on the submission for OMB review as required by the Paperwork Reduction Act of 1995.

DATES: Interested persons are invited to submit comments on or before February 10, 2010.

ADDRESSES: Written comments should be addressed to the Office of Information and Regulatory Affairs, Attention: Education Desk Officer, Office of Management and Budget, 725 17th Street, NW., Room 10222, New Executive Office Building, Washington, DC 20503, be faxed to (202) 395–5806 or send e-mail to *oira_submission@omb.eop.gov.*

SUPPLEMENTARY INFORMATION: Section 3506 of the Paperwork Reduction Act of 1995 (44 U.S.C. Chapter 35) requires that the Office of Management and Budget (OMB) provide interested Federal agencies and the public an early opportunity to comment on information collection requests. OMB may amend or waive the requirement for public consultation to the extent that public participation in the approval process would defeat the purpose of the information collection, violate State or Federal law, or substantially interfere with any agency's ability to perform its statutory obligations. The Acting Director, Information Collection Clearance Division, Regulatory Information Management Services, Office of Management, publishes that notice containing proposed information collection requests prior to submission of these requests to OMB. Each proposed information collection, grouped by office, contains the following: (1) Type of review requested, e.g. new, revision, extension, existing or reinstatement; (2) Title; (3) Summary of the collection; (4) Description of the need for, and proposed use of, the information; (5) Respondents and frequency of collection; and (6) Reporting and/or Recordkeeping burden. OMB invites public comment.

Dated: January 6, 2010.

James Hyler,

Acting Director, Information Collection Clearance Division, Regulatory Information Management Services, Office of Management.

Institute of Education Sciences

Type of Review: Revision.

Title: National Assessment of Education Progress (NAEP) 2011–13 System Clearance.

Frequency: One time.

Affected Public: Individuals or households.

Reporting and Recordkeeping Hour Burden:

Responses: 1,206,567.

Burden Hours: 325,583.

Abstract: NCES is requesting a 3 year generic system clearance for the NAEP assessments (OMB #1850–0790) to be administered in the 2011–2013 timeframe. The primary reason for the system clearance request is that it enables NAEP to meet its large and complex assessment reporting schedules and deliverables through a more efficient clearance process. NAEP is a federally authorized survey of student achievement at grades 4, 8, and 12 in various subject areas, such as mathematics, reading, writing, science, U.S. history, civics, geography, economics, and the arts. The No Child Left Behind Act of 2001 (NCLB) requires the assessment to collect data on specified student groups and to provide representative sample data on student achievement for the nation, the states, and subpopulations of students as well as to monitor progress over time. The nature of NAEP is that burden alternates from a relatively low burden in national-level administration years to a substantial burden increase in state-level administration years when the sample has to allow for estimates for states and some large urban districts. The 2011–2013 NAEP cycle will include increased participation of students with disabilities and English Language Learners. For 2011, there is a slight decrease in the number of burden hours from the previous system clearance, national-level administration will be conducted in 2012 involving a large reduction in burden, and a state-level administration will be conducted in 2013 involving a large increase in burden hours.

Requests for copies of the information collection submission for OMB review may be accessed from *http://edicsweb.ed.gov,* by selecting the "Browse Pending Collections" link and by clicking on link number 4168. When you access the information collection, click on "Download Attachments " to view. Written requests for information should be addressed to U.S. Department of Education, 400 Maryland Avenue, SW., LBJ, Washington, DC 20202–4537. Requests may also be electronically mailed to the Internet address *ICDocketMgr@ed.gov* or faxed to 202–401–0920. Please specify the complete title of the information collection when making your request.

Comments regarding burden and/or the collection activity requirements should be electronically mailed to *ICDocketMgr@ed.gov.* Individuals who use a telecommunications device for the deaf (TDD) may call the Federal Information Relay Service (FIRS) at 1–800–877–8339.

[FR Doc. 2010–255 Filed 1–8–10; 8:45 am]

BILLING CODE 4000–01–P

DEPARTMENT OF EDUCATION

Submission for OMB Review; Comment Request

AGENCY: Department of Education.

SUMMARY: The Acting Director, Information Collection Clearance Division, Regulatory Information Management Services, Office of Management invites comments on the submission for OMB review as required by the Paperwork Reduction Act of 1995.

DATES: Interested persons are invited to submit comments on or before February 10, 2010.

ADDRESSES: Written comments should be addressed to the Office of Information and Regulatory Affairs, Attention: Education Desk Officer, Office of Management and Budget, 725 17th Street, NW., Room 10222, New Executive Office Building, Washington, DC 20503, be faxed to (202) 395–5806 or send e-mail to *oira_submission@omb.eop.gov.*

SUPPLEMENTARY INFORMATION: Section 3506 of the Paperwork Reduction Act of 1995 (44 U.S.C. Chapter 35) requires that the Office of Management and Budget (OMB) provide interested Federal agencies and the public an early opportunity to comment on information collection requests. OMB may amend or waive the requirement for public consultation to the extent that public participation in the approval process would defeat the purpose of the information collection, violate State or Federal law, or substantially interfere with any agency's ability to perform its statutory obligations. The Acting Director, Information Collection Clearance Division, Regulatory Information Management Services, Office of Management, publishes that notice containing proposed information collection requests prior to submission of these requests to OMB. Each proposed information collection, grouped by office, contains the following: (1) Type of review requested, *e.g.* new, revision, extension, existing or reinstatement; (2) Title; (3) Summary of the collection; (4) Description of the need for, and proposed use of, the information; (5) Respondents and frequency of collection; and (6) Reporting and/or Recordkeeping burden. OMB invites public comment.

Dated: January 6, 2010.

James Hyler,

Acting Director, Information Collection Clearance Division, Regulatory Information Management Services, Office of Management.

Office of Special Education and Rehabilitative Services

Type of Review: Extension.

Title: Application for Client Assistance Program (CAP).

Frequency: When state has redesignated its CAP or when there is a statutory change affecting content of assurances.

Affected Public: State, Local, or Tribal Gov't, SEAs or LEAs.

Reporting and Recordkeeping Hour Burden:

Responses: 56.

Burden Hours: 9.

Abstract: This form is used by states to request funds to establish and carry out the Client Assistance Program (CAP). The CAP is mandated by the Rehabilitation Act of 1973, as amended (the Act), to advise individuals with disabilities of the benefits and services available under the Act and of the rights afforded them pursuant to the Americans with Disabilities Act of 1990, and to assist individuals applying for or receiving services in their relationships with projects, programs, and services provided under the Act. Section 112 of the Act requires a state to have in effect a CAP in order to receive Section 110 and other allotments under the Act.

Requests for copies of the information collection submission for OMB review may be accessed from *http://edicsweb.ed.gov,* by selecting the "Browse Pending Collections" link and by clicking on link number 4169. When you access the information collection, click on "Download Attachments" to view. Written requests for information should be addressed to U.S. Department of Education, 400 Maryland Avenue, SW., LBJ, Washington, DC 20202–4537. Requests may also be electronically mailed to the Internet address *ICDocketMgr@ed.gov* or faxed to 202–401–0920. Please specify the complete title of the information collection when making your request.

Comments regarding burden and/or the collection activity requirements should be electronically mailed to *ICDocketMgr@ed.gov.* Individuals who use a telecommunications device for the deaf (TDD) may call the Federal Information Relay Service (FIRS) at 1–800–877–8339.

[FR Doc. 2010–257 Filed 1–8–10; 8:45 am]

BILLING CODE 4000–01–P

DEPARTMENT OF ENERGY

Environmental Management Site-Specific Advisory Board, Northern New Mexico

AGENCY: Department of Energy.

ACTION: Notice of open meeting.

SUMMARY: This notice announces a combined meeting of the Environmental Monitoring, Surveillance and Remediation Committee and Waste Management Committee of the Environmental Management Site-Specific Advisory Board (EM SSAB), Northern New Mexico (known locally as the Northern New Mexico Citizens' Advisory Board (NNMCAB). The Federal Advisory Committee Act (Pub. L. No. 92–463, 86 Stat. 770) requires that public notice of this meeting be announced in the **Federal Register**.

DATES: Wednesday, January 13, 2010, 1 p.m.–2:30 p.m.

ADDRESSES: Bradbury Museum, 15th and Central, Los Alamos, New Mexico 85744.

FOR FURTHER INFORMATION CONTACT: Menice Santistevan, Northern New Mexico Citizens' Advisory Board (NNMCAB), 1660 Old Pecos Trail, Suite B, Santa Fe, NM 87505. Phone (505) 995–0393; Fax (505) 989–1752 or E-mail: *msantistevan@doeal.gov.*

SUPPLEMENTARY INFORMATION:

Purpose of the Board: The purpose of the Board is to make recommendations to DOE–EM and site management in the areas of environmental restoration, waste management, and related activities.

Purpose of the Environmental Monitoring, Surveillance and Remediation Committee (EMS&R): The EMS&R Committee provides a citizens' perspective to NNMCAB on current and future environmental remediation activities resulting from historical Los Alamos National Laboratory (LANL) operations and, in particular, issues pertaining to groundwater, surface water and work required under the New Mexico Environment Department Order on Consent. The EMS&R Committee will keep abreast of DOE–EM and site programs and plans. The committee will work with the NNMCAB to provide assistance in determining priorities and the best use of limited funds and time. Formal recommendations will be proposed when needed and, after consideration and approval by the full NNMCAB, may be sent to DOE–EM for action.

Purpose of the Waste Management Committee: The Waste Management Committee reviews policies, practices and procedures, existing and proposed, so as to provide recommendations, advice, suggestions and opinions to the NNMCAB regarding the Waste Management Operations at the Los Alamos site.

Tentative Agenda:

1 p.m. Combined EMS&R and Waste Management Committee Meeting.

2:30 p.m. Adjourn.

Public Participation: The NNMCAB's Environmental Monitoring, Surveillance and Remediation and Waste Management Committees welcome the attendance of the public at their combined committee meeting and will make every effort to accommodate persons with physical disabilities or special needs. If you require special accommodations due to a disability, please contact Menice Santistevan at least seven days in advance of the meeting at the telephone number listed above. Written statements may be filed with the Committees either before or after the meeting. Individuals who wish to make oral statements pertaining to agenda items should contact Menice Santistevan at the address or telephone number listed above. Requests must be received five days prior to the meeting and reasonable provision will be made to include the presentation in the agenda. The Deputy Designated Federal Officer is empowered to conduct the meeting in a fashion that will facilitate the orderly conduct of business. Individuals wishing to make public comments will be provided a maximum of five minutes to present their comments. This notice is being published less than 15 days prior to the meeting date due to programmatic issues that had to be resolved prior to the meeting date.

Minutes: Minutes will be available by writing or calling Menice Santistevan at the address or phone number listed above. Minutes and other Board documents are on the Internet at: *http://www.nnmcab.org/.*

Issued at Washington, DC, on January 6, 2010.

Rachel Samuel,

Deputy Committee Management Officer.

[FR Doc. 2010–248 Filed 1–8–10; 8:45 am]

BILLING CODE 6405–01–P

DEPARTMENT OF ENERGY

Federal Energy Regulatory Commission

[Docket No. QF10–229–000]

Medical Area Total Energy Plant, Inc., New MATEP Inc.; Notice of Application for Commission Certification of Qualifying Status of a Cogeneration Facility

January 4, 2010.

Take notice that on December 29, 2009, Medical Area Total Energy Plant, Inc. and New MATEP Inc., 474 Brookline Avenue, Boston, MA 02215, filed with the Federal Energy Regulatory Commission an application for recertification of a facility as a qualifying cogeneration facility pursuant to 18 CFR 292.207(b) of the Commission's regulations. No determination has been made that the submittal constitutes a complete filing.

The facility is a central district energy plant located in the Longwood Medical and Academic Area of Boston, MA that operates in both cogeneration and combined cycle modes, currently comprised of combustion turbine, diesel and steam turbine generators, heat recovery steam generators, conventional boilers, and large industrial chillers. Annual consumption by MATEP's commercial and institutional customers totals over 1.7 billion pounds of steam, 91 ton-hours of refrigeration and 316 million kilowatt-hours of electricity. Its primary energy sources are natural gas and oil based fuels.

The facility is interconnected with NSTAR Electric Company, and sells excess electric power output that is not consumed by the facility's institutional and commercial customers to ISO New England Inc. The facility purchases supplementary, standby, back-up and maintenance power from either NSTAR Electric Company or Constellation New Energy, Inc.

Any person desiring to intervene or to protest this filing must file in accordance with Rules 211 and 214 of the Commission's Rules of Practice and Procedure (18 CFR 385.211 and 385.214). Protests will be considered by the Commission in determining the appropriate action to be taken, but will not serve to make protestants parties to the proceeding. Any person wishing to become a party must file a notice of intervention or motion to intervene, as appropriate. Such notices, motions, or protests must be filed on or before the comment date. Anyone filing a motion to intervene or protest must serve a copy of that document on the Applicant. On or before the comment date, it is not necessary to serve motions to intervene or protests on persons other than the Applicant.

The Commission encourages electronic submission of protests and interventions in lieu of paper using the "eFiling" link at *http://www.ferc.gov*. Persons unable to file electronically should submit an original and 14 copies of the protest or intervention to the Federal Energy Regulatory Commission, 888 First Street, NE., Washington, DC 20426.

This filing is accessible online at *http://www.ferc.gov*, using the "eLibrary" link and is available for review in the Commission's Public Reference Room in Washington, DC. There is an "eSubscription" link on the Web site that enables subscribers to receive e-mail notification when a document is added to a subscribed docket(s). For assistance with any FERC Online service, please e-mail *FERCOnlineSupport@ferc.gov*, or call (866) 208–3676 (toll free). For TTY, call (202) 502–8659.

Comment Date: 5 p.m. Eastern Time on January 19, 2010.

Kimberly D. Bose,

Secretary.

[FR Doc. 2010–185 Filed 1–8–10; 8:45 am]

BILLING CODE 6717–01–P

DEPARTMENT OF ENERGY

Federal Energy Regulatory Commission

[Docket Nos. EL10–32–000, QF08–622–002]

WM Renewable Energy, L.L.C.; Notice of Filing

January 4, 2010.

Take notice that on December 31, 2009, WM Renewable Energy, L.L.C. filed a petition for a declaratory order, pursuant to Rule 207(a)(2) of the Rules of Practice and Procedure of the Commission, requesting a limited waiver from the filing requirement of section 292.203(a)(3), of the Commission's regulations, 18 CFR 292.203(a)(3), for a qualifying small power production facility for the period from September 24, 2007 to June 30, 2008.

Any person desiring to intervene or to protest this filing must file in accordance with Rules 211 and 214 of the Commission's Rules of Practice and Procedure (18 CFR 385.211, 385.214). Protests will be considered by the Commission in determining the appropriate action to be taken, but will not serve to make protestants parties to the proceeding. Any person wishing to become a party must file a notice of intervention or motion to intervene, as appropriate. Such notices, motions, or protests must be filed on or before the comment date. On or before the comment date, it is not necessary to serve motions to intervene or protests on persons other than the Applicant.

The Commission encourages electronic submission of protests and interventions in lieu of paper using the "eFiling" link at *http://www.ferc.gov*. Persons unable to file electronically should submit an original and 14 copies of the protest or intervention to the Federal Energy Regulatory Commission, 888 First Street, NE., Washington, DC 20426.

This filing is accessible on-line at *http://www.ferc.gov*, using the "eLibrary" link and is available for review in the Commission's Public Reference Room in Washington, DC. There is an "eSubscription" link on the Web site that enables subscribers to receive e-mail notification when a document is added to a subscribed docket(s). For assistance with any FERC Online service, please e-mail *FERCOnlineSupport@ferc.gov*, or call (866) 208–3676 (toll free). For TTY, call (202) 502–8659.

Comment Date: 5 p.m. Eastern Time on February 1, 2010.

Kimberly D. Bose,

Secretary.

[FR Doc. 2010–183 Filed 1–8–10; 8:45 am]

BILLING CODE 6717–01–P

DEPARTMENT OF ENERGY

Federal Energy Regulatory Commission

[Docket No. EL10–25–000]

City of Anaheim, CA, California Independent System Operator Corporation; Notice of Filing

January 4, 2010.

Take notice that on December 22, 2009, City of Anaheim, California and the California Independent System Operator Corporation filed is seventh annual revision to its Transmission Revenue Balancing Account Adjustment, to become effective January 1, 2010.

Any person desiring to intervene or to protest this filing must file in accordance with Rules 211 and 214 of the Commission's Rules of Practice and Procedure (18 CFR 385.211, 385.214). Protests will be considered by the Commission in determining the appropriate action to be taken, but will not serve to make protestants parties to

the proceeding. Any person wishing to become a party must file a notice of intervention or motion to intervene, as appropriate. Such notices, motions, or protests must be filed on or before the comment date. On or before the comment date, it is not necessary to serve motions to intervene or protests on persons other than the Applicant.

The Commission encourages electronic submission of protests and interventions in lieu of paper using the "eFiling" link at *http://www.ferc.gov*. Persons unable to file electronically should submit an original and 14 copies of the protest or intervention to the Federal Energy Regulatory Commission, 888 First Street, NE., Washington, DC 20426.

This filing is accessible on-line at *http://www.ferc.gov*, using the "eLibrary" link and is available for review in the Commission's Public Reference Room in Washington, DC. There is an "eSubscription" link on the Web site that enables subscribers to receive e-mail notification when a document is added to a subscribed docket(s). For assistance with any FERC Online service, please e-mail *FERCOnlineSupport@ferc.gov*, or call (866) 208–3676 (toll free). For TTY, call (202) 502–8659.

Comment Date: 5 p.m. Eastern Time on January 12, 2010.

Kimberly D. Bose,

Secretary.

[FR Doc. 2010–186 Filed 1–8–10; 8:45 am]

BILLING CODE 6717–01–P

DEPARTMENT OF ENERGY

Federal Energy Regulatory Commission

[Docket No. EL10–26–000]

City of Riverside, CA, California Independent System Operator Corporation; Notice of Filing

January 4, 2010.

Take notice that on December 22, 2009, City of Riverside, California and the California Independent System Operator Corporation filed its seventh annual revision to its Transmission Revenue Balancing Account Adjustment, to become effective January 1, 2010.

Any person desiring to intervene or to protest this filing must file in accordance with Rules 211 and 214 of the Commission's Rules of Practice and Procedure (18 CFR 385.211, 385.214). Protests will be considered by the Commission in determining the appropriate action to be taken, but will not serve to make protestants parties to the proceeding. Any person wishing to become a party must file a notice of intervention or motion to intervene, as appropriate. Such notices, motions, or protests must be filed on or before the comment date. On or before the comment date, it is not necessary to serve motions to intervene or protests on persons other than the Applicant.

The Commission encourages electronic submission of protests and interventions in lieu of paper using the "eFiling" link at *http://www.ferc.gov*. Persons unable to file electronically should submit an original and 14 copies of the protest or intervention to the Federal Energy Regulatory Commission, 888 First Street, NE., Washington, DC 20426.

This filing is accessible on-line at *http://www.ferc.gov*, using the "eLibrary" link and is available for review in the Commission's Public Reference Room in Washington, DC. There is an "eSubscription" link on the Web site that enables subscribers to receive e-mail notification when a document is added to a subscribed docket(s). For assistance with any FERC Online service, please e-mail *FERCOnlineSupport@ferc.gov*, or call (866) 208–3676 (toll free). For TTY, call (202) 502–8659.

Comment Date: 5 p.m. Eastern Time on January 12, 2010.

Kimberly D. Bose,

Secretary.

[FR Doc. 2010–182 Filed 1–8–10; 8:45 am]

BILLING CODE 6717–01–P

DEPARTMENT OF ENERGY

Federal Energy Regulatory Commission

[Docket No. ER10–505–000]

Dynegy Services Plum Point LLC; Supplemental Notice That Initial Market-Based Rate Filing Includes Request for Blanket Section 204 Authorization

January 4, 2010.

This is a supplemental notice in the above-referenced proceeding of Dynegy Services Plum Point LLC's application for market-based rate authority, with an accompanying rate tariff, noting that such application includes a request for blanket authorization, under 18 CFR part 34, of future issuances of securities and assumptions of liability.

Any person desiring to intervene or to protest should file with the Federal Energy Regulatory Commission, 888 First Street, NE., Washington, DC 20426, in accordance with Rules 211 and 214 of the Commission's Rules of Practice and Procedure (18 CFR 385.211 and 385.214). Anyone filing a motion to intervene or protest must serve a copy of that document on the Applicant.

Notice is hereby given that the deadline for filing protests with regard to the applicant's request for blanket authorization, under 18 CFR part 34, of future issuances of securities and assumptions of liability, is January 25, 2010.

The Commission encourages electronic submission of protests and interventions in lieu of paper, using the FERC Online links at *http://www.ferc.gov.* To facilitate electronic service, persons with Internet access who will eFile a document and/or be listed as a contact for an intervenor must create and validate an eRegistration account using the eRegistration link. Select the eFiling link to log on and submit the intervention or protests.

Persons unable to file electronically should submit an original and 14 copies of the intervention or protest to the Federal Energy Regulatory Commission, 888 First Street, NE., Washington, DC 20426.

The filings in the above-referenced proceeding are accessible in the Commission's eLibrary system by clicking on the appropriate link in the above list. They are also available for review in the Commission's Public Reference Room in Washington, DC. There is an eSubscription link on the Web site that enables subscribers to receive e-mail notification when a document is added to a subscribed docket(s). For assistance with any FERC Online service, please e-mail *FERCOnlineSupport@ferc.gov* or call (866) 208–3676 (toll free). For TTY, call (202) 502–8659.

Kimberly D. Bose,

Secretary.

[FR Doc. 2010–184 Filed 1–8–10; 8:45 am]

BILLING CODE 6717–01–P

DEPARTMENT OF ENERGY

Southwestern Power Administration

Integrated System Power Rates

AGENCY: Southwestern Power Administration, DOE.

ACTION: Notice of Rate Order.

SUMMARY: Pursuant to Delegation Order Nos. 00–037.00, effective December 6, 2001, and 00–001.00C, effective January 31, 2007, the Deputy Secretary has approved and placed into effect on an

interim basis Rate Order No. SWPA–62, which increases the power rates for the *Integrated System pursuant to the following Integrated System Rate Schedules:*

Rate Schedule P–09, Wholesale Rates for Hydro Peaking Power
Rate Schedule NFTS–09, Wholesale Rates for Non-Federal Transmission/ Interconnection Facilities Service
Rate Schedule EE–09, Wholesale Rate for Excess Energy

The rate schedules supersede the existing rate schedules shown below:

Rate Schedule P–06A, Wholesale Rates for Hydro Peaking Power (superseded by P–09)
Rate Schedule NFTS–06A, Wholesale Rates for Non-Federal Transmission/ Interconnection Facilities Service (superseded by NFTS–09)
Rate Schedule EE–06, Wholesale Rate for Excess Energy (superseded by EE–09)

The effective period for the rate schedules specified in Rate Order No. SWPA–62 is January 1, 2010, through September 30, 2013.

FOR FURTHER INFORMATION CONTACT: Mr. James K. McDonald, Assistant Administrator, Office of Corporate Operations, Southwestern Power Administration, Department of Energy, Williams Center Tower I, One West Third Street, Tulsa, Oklahoma 74103, (918) 595–6690, *jim.mcdonald@swpa.gov*

SUPPLEMENTARY INFORMATION: Southwestern Power Administration's (Southwestern) Administrator has determined based on the 2009 Integrated System Current Power Repayment Study, that existing rates will not satisfy cost recovery criteria specified in Department of Energy Order No. RA 6120.2 and Section 5 of the Flood Control Act of 1944. The finalized 2009 Integrated System Power Repayment Studies (PRSs) indicate that an increase in annual revenue of $17,330,858, or 10.8 percent, beginning January 1, 2010, will satisfy cost recovery criteria for the Integrated System projects. The proposed Integrated System rate schedules would increase annual revenues from $160,255,300 to $177,586,158, to recover increased investments and replacements in the hydroelectric generating and transmission facilities and increased operations and maintenance costs for both Southwestern and the U.S. Army's Corps of Engineers (Corps). Additionally, the PRS analyzes the Purchased Power Deferral Account which indicated no change was needed for the Purchased Power Adder which is used to recover average year purchased energy costs. This proposal also continues the size and frequency of the Administrator's Discretionary Purchased Power Adder Adjustment (Adjustment). This Adjustment allows the Administrator to adjust the Purchased Power Adder twice annually, limited to ±$0.0067 per kilowatthour per year as necessary, at his/her discretion, under a formula-type rate, with notification to the Federal Energy Regulatory Commission, to maintain the balance at a level that will recover average year purchased power costs.

The Administrator has followed Title 10, Part 903 Subpart A, of the Code of Federal Regulations, "Procedures for Public Participation in Power and Transmission Rate Adjustments and Extensions" in connection with the proposed rate schedule. On September 23, 2009, Southwestern published notice in the **Federal Register,** (74 FR 48527), of a 60-day comment period, together with a combined Public Information and Comment Forum, to provide an opportunity for customers and other interested members of the public to review and comment on the proposed rate increase for the Integrated System. The forum was canceled since no one expressed an intention to participate. Written comments were accepted through November 23, 2009. No comments were received.

Information regarding this rate proposal, including studies and other supporting material, is available for public review and comment in the offices of Southwestern Power Administration, Williams Center Tower I, One West Third Street, Tulsa, Oklahoma 74103. Following review of Southwestern's proposal within the Department of Energy, I approved, Rate Order No. SWPA–62, on an interim basis, which increases the existing Integrated System annual revenue requirement to $177,586,158 per year for the period January 1, 2010 through September 30, 2013.

Dated: December 30, 2009.

Daniel Poneman,

Deputy Secretary.

UNITED STATES OF AMERICA
DEPARTMENT OF ENERGY
DEPUTY SECRETARY OF ENERGY

In the matter of: Southwestern Power Administration) Integrated System Rates: Rate Order No. SWPA–62.

ORDER CONFIRMING, APPROVING AND PLACING INCREASED POWER RATE SCHEDULES IN EFFECT ON AN INTERIM BASIS (_____)

Pursuant to Sections 302(a) and 301(b) of the Department of Energy Organization Act, Public Law 95–91, the functions of the Secretary of the Interior and the Federal Power Commission under Section 5 of the Flood Control Act of 1944, 16 U.S.C. 825s, relating to the Southwestern Power Administration (Southwestern) were transferred to and vested in the Secretary of Energy. By Delegation Order No. 00–037.00, the Secretary of Energy delegated to the Administrator of Southwestern the authority to develop power and transmission rates, delegated to the Deputy Secretary of the Department of Energy the authority to confirm, approve, and place in effect such rates on an interim basis and delegated to the Federal Energy Regulatory Commission (FERC) the authority to confirm and approve on a final basis or to disapprove rates developed by the Administrator under the delegation. The Deputy Secretary issued this interim rate order pursuant to that delegation.

BACKGROUND

FERC confirmation and approval of the following Integrated System (System) rate schedules was provided in FERC Docket No. EF09–4011–000 issued on June 24, 2009, (127 FERC ¶ 62,232) effective for the period January 1, 2009, through September 30, 2010:

Rate Schedule P–06A, Wholesale Rates for Hydro Peaking Power
Rate Schedule NFTS–06A, Wholesale Rates for Non-Federal Transmission/ Interconnection Facilities Service.

FERC confirmation and approval of the following System rate schedule was provided in FERC Docket No. EF07–4011–000 issued February 27, 2007, (118 FERC ¶ 62,162) for the period October 1, 2006, through September 30, 2010:
Rate Schedule EE–06, Wholesale Rate for Excess Energy.

Southwestern prepared a 2009 Current Power Repayment Study (PRS) which indicated that the existing rates would not satisfy present financial criteria regarding repayment of investment within a 50-year period due to increased investments, replacements and operations and maintenance expenses in the U.S. Army Corps of Engineers (Corps) hydroelectric generating facilities and Southwestern's transmission facilities. The initial Revised PRS indicated the need for an 11.9 percent revenue increase.

An informal meeting was held in June 2009 with Southwestern's customer representatives to review the repayment and rate design processes and present the basis for the proposed revenue increase. At this informal meeting, suggestions from Southwestern's customers relating to investment service lives were discussed. As a result of the discussion, Southwestern made the determination to revise the proposed PRS. Upon completion of those changes in June 2009, Southwestern prepared a final 2009 Revised PRS for the System

resulting in approximately a one percent decrease in needed revenues from the initial proposal. Another informal meeting was tentatively scheduled for July 2009. However, none of Southwestern's customers requested to convene the meeting and as a result, none was held.

The final 2009 Revised PRS indicates that an increase in annual revenues of $17,330,858 (10.8 percent) is necessary beginning January 1, 2010, to accomplish repayment in the required number of years. Accordingly, Southwestern has prepared proposed rate schedules based on the additional revenue requirement and the 2009 Rate Design Study which allocates the revenue requirement to the various System rate schedules to ensure repayment.

Title 10, Part 903, Subpart A of the Code of Federal Regulations, "Procedures for Public Participation in Power and Transmission Rate Adjustments and Extensions," has been followed in connection with the proposed rate adjustments. More specifically, opportunities for public review and comment on proposed System power rates during a 60-day period were announced by notice published in the **Federal Register**, September 23, 2009, (74 FR 48527). The consultation and comment period was shortened from the 90 days provided for in the regulations by the Administrator in accordance with Sec. 903.14 of 10 CFR part 903, because of the pre-issuance consultations that were held with Southwestern's customers and the need to assure new rates are in place by January 1, 2010. A Public Information and Comment Forum scheduled for October 7, 2009, in Tulsa, Oklahoma, was canceled since no one expressed an intent to attend. Southwestern mailed copies of the proposed June 2009 PRS and Rate Design Studies to customers and interested parties that requested the data, for review and comment during the formal period of public participation. Written comments were due by November 23, 2009.

No comments were received during the public participation process. Following the conclusion of the comment period on November 23, 2009, the 2009 Power Repayment and Rate Design Studies were finalized. The Administrator made the decision to submit the rate proposal for interim approval and implementation.

DISCUSSION

General

The existing rate schedules as developed in the 2006 Integrated System PRS were the basis for the revenue determination in the System Current PRS. The Current PRS indicates that existing rates are insufficient to produce the annual revenues necessary to accomplish repayment of the capital investment as required by Section 5 of the Flood Control Act of 1944 and Department of Energy (DOE) Order No. RA 6120.2.

The Revised PRS indicates it is necessary to increase annual revenues by $17,330,858 or 10.8 percent, which satisfies the cost recovery criteria outlined in DOE Order No. RA 6120.2 and Section 5 of the Flood Control Act of 1944.

In Southwestern's 2009 Rate Design proposal, rates were designed to recover the additional revenue requirements. The monthly demand charge for the sale of Federal hydroelectric power has increased. The base energy and supplemental energy charges also reflect an increase over the current rate. In addition, transmission charges for non-Federal, firm service have increased. Those customers taking transformation service will be affected by an increase in that rate component. The increases to the transmission charges are due to including projected additions and replacements to Southwestern's aging transmission facilities since the last rate change.

Consistent with FERC's Order No. 888, Southwestern will continue charging for the six ancillary services under Rate Schedule P–09 and Rate Schedule NTFS–09, and offering network transmission service under Rate Schedule NFTS–09. Southwestern's rate design has separated the six ancillary services for all transmission service. Two ancillary services, Scheduling, System Control and Dispatch Service together with Reactive and Voltage Support Service, are required for every transmission transaction. These charges are also a part of the capacity rate for Federal power. This is consistent with Southwestern's long-standing practice of charging for the sale and delivery of Federal power in its Federal demand charge. The four remaining ancillary services will be made available to any transmission user within Southwestern's balancing area, including Federal power customers. The rate schedules for Peaking Power and Non-Federal Transmission Service reflect these charges. Network transmission service is provided to those who request the service, within Southwestern's balancing area, but only for non-Federal deliveries. The rate for and application of this service are identified in the Non-Federal Transmission/Interconnection Facilities Service Rate Schedule, NFTS–09.

With respect to the Purchased Power Adder (Adder), Southwestern is proposing, as in all previous proposals beginning with the 1983 implementation of the purchased power rate component, that the Adder is set equal to the current average long-term purchased power revenue requirement. As shown in the Rate Design Study, the amount is determined by dividing the estimated total average direct purchased power costs by Southwestern's total annual contractual 1200-hour peaking energy commitments to the customers (exclusive of contract support arrangements). In this rate proposal, the resulting Adder does not change from the current $0.0067 per kWh of peaking energy. The total revenue created through application of this Adder should enable Southwestern to cover its average annual purchased power costs.

COMMENTS AND RESPONSES

Southwestern received no comments or questions during the public participation period.

AVAILABILITY OF INFORMATION

Information regarding this rate proposal, including studies, comments and other supporting material, is available for public review and comment in the offices of Southwestern Power Administration, One West Third Street, Tulsa, OK 74103.

ADMINISTRATION'S CERTIFICATION

The June 2009 Revised PRS indicates that the increased power rates will repay all costs of the Integrated System including amortization of the power investment consistent with the provisions of Department of Energy Order No. RA 6120.2. In accordance with Delegation Order No. 00–037.00, December 6, 2001, and Section 5 of the Flood Control Act of 1944, the Administrator has determined that the proposed System rates are consistent with applicable law and the lowest possible rates consistent with sound business principles.

ENVIRONMENT

The environmental impact of the proposed System rates was evaluated in consideration of DOE's guidelines for implementing the procedural provisions of the National Environmental Policy Act and was determined to fall within the class of actions that are categorically excluded from the requirements of preparing either an Environmental Impact Statement or an Environmental Assessment.

ORDER

In view of the foregoing and pursuant to the authority delegated to me by the Secretary of Energy, I hereby confirm, approve and place in effect on an interim basis, effective January 1, 2010, the following Southwestern Integrated System Rate Schedules which shall remain in effect on an interim basis through September 30, 2013, or until the FERC confirms and approves the rates on a final basis.

Dated: December 30, 2009.

Daniel Poneman
Deputy Secretary.

UNITED STATES DEPARTMENT OF ENERGY SOUTHWESTERN POWER ADMINISTRATION

RATE SCHEDULE P–09[1] WHOLESALE RATES FOR HYDRO PEAKING POWER

Effective: During the period January 1, 2010, through September 30, 2013, in accordance with Rate Order No. SWPA–62 issued by the Deputy Secretary of Energy on *December 30, 2009.*

Available: In the marketing area of Southwestern Power Administration (Southwestern), described generally as the States of Arkansas, Kansas, Louisiana, Missouri, Oklahoma, and Texas.

Applicable: To wholesale Customers which have contractual rights from Southwestern to purchase Hydro Peaking Power and associated energy (Peaking Energy and Supplemental Peaking Energy).

Character and Conditions of Service: Three-phase, alternating current, delivered at approximately 60 Hertz, at the nominal voltage(s), at the points of delivery, and in such quantities as are specified by contract.

Definitions of Terms:

"Customer" is the entity which is utilizing and/or purchasing hydroelectric power and

[1] Supersedes Rate Schedule P–06A

associated energy and services from Southwestern pursuant to this rate schedule.

The "Demand Period" used to determine maximum integrated rates of delivery for the purpose of power accounting is the 60-minute period which begins with the change of hour. The term "peak demand" means the highest rate of delivery, in kilowatts, for any Demand Period during a particular month, at any particular point of delivery.

For the purposes of this Rate Schedule, the term "point of delivery" is used to mean either a single physical point at which electric power and energy are delivered from the System of Southwestern (defined below), or a specified set of delivery points which together form a single, electrically integrated load. "Peak demand" for such set of delivery points is computed as the coincidental highest rate of delivery among the specified points rather than as the sum of peak demands for each individual physical point of delivery.

The term "Peaking Contract Demand" means the maximum rate in kilowatts at which Southwestern is, by contract, obligated to deliver Peaking Energy during any Demand Period. Unless otherwise provided by contract, the "Peaking Billing Demand" for any month shall be equal to the "Peaking Contract Demand."

The term "Uncontrollable Force," as used herein, shall mean any force which is not within the control of the party affected, including, but not limited to failure of water supply, failure of facilities, flood, earthquake, storm, lightning, fire, epidemic, war, riot, civil disturbance, labor disturbance, sabotage, or restraint by court of general jurisdiction, which by exercise of due diligence and foresight such party could not reasonably have been expected to avoid.

The term "System of Southwestern" means the high-voltage transmission lines and related facilities Southwestern owns and operates, and/or has contractual rights to such transmission facilities owned by others.

"Ancillary Services" are those services necessary to support the transmission of capacity and energy from resources to loads while maintaining reliable operation of the System of Southwestern in accordance with good utility practice. Definitions of the Ancillary Services are as follows:

"Scheduling, System Control, and Dispatch Service" is provided by Southwestern as Balancing Authority Area operator and is in regard to interchange and load-match scheduling and related system control and dispatch functions.

"Reactive Supply and Voltage Control from Generation Sources Service" is provided at transmission facilities in the System of Southwestern to produce or absorb reactive power and to maintain transmission voltages within specific limits.

"Regulation and Frequency Response Service" is the continuous balancing of generation and interchange resources accomplished by raising or lowering the output of on-line generation as necessary to follow the moment-by-moment changes in load and to maintain frequency within a Balancing Authority Area.

"Spinning Operating Reserve Service" maintains generating units on-line, but loaded at less than maximum output, which may be used to service load immediately when disturbance conditions are experienced due to a sudden loss of generation or load.

"Supplemental Operating Reserve Service" provides an additional amount of operating reserve sufficient to reduce Area Control Error to zero within 10 minutes following loss of generating capacity which would result from the most severe single contingency.

"Energy Imbalance Service" corrects for differences over a period of time between schedules and actual hourly deliveries of energy to a load. Energy delivered or received within the authorized bandwidth (defined below) for this service is accounted for as an inadvertent flow and is returned to the providing party by the receiving party in accordance with standard utility practice.

Energy Associated with Hydro Peaking Power:

PEAKING ENERGY: 1,200 kilowatthours of Peaking Energy per kilowatt of Peaking Contract Demand will be furnished during each contract year.

SUPPLEMENTAL PEAKING ENERGY: Supplemental Peaking Energy (in addition to Peaking Energy) will be furnished if and when determined by Southwestern to be available, and at rates of delivery which do not exceed the Customer's Peaking Contract Demand.

Monthly Rates for Peaking Contract Demand:

CAPACITY CHARGE FOR HYDRO PEAKING POWER: $4.06 per kilowatt of Peaking Billing Demand.

Services Associated with Capacity Charge for Hydro Peaking Power

The capacity charge for Hydro Peaking Power includes such transmission services as are necessary to integrate Southwestern's resources in order to reliably deliver Hydro Peaking Power and associated energy to Customers. This capacity charge also includes two ancillary services charges, Scheduling, System Control and Dispatch Service and Reactive Supply and Voltage Control from Generation Sources Service.

Secondary Transmission Service under Capacity Associated with Hydro Peaking Power

Customers may utilize the capacity associated with Peaking Contract Demand for the transmission of non-Federal energy, on a non-firm, as-available basis, at no additional charge for such transmission service or associated Ancillary Services, under the following terms and conditions:

(1) The sum of the capacity, for any hour, which is used for Peaking Energy, Supplemental Peaking Energy, and Secondary Transmission Service, may not exceed the Peaking Contract Demand;

(2) The non-Federal energy transmitted under such secondary service is delivered to the Customer's point of delivery for Hydro Peaking Power;

(3) The Customer commits to provide Real Power Losses associated with such deliveries of non-Federal energy; and

(4) Southwestern determines that sufficient transfer capability exists between the point of receipt into the System of Southwestern of such non-Federal energy and the Customer's point of delivery for Hydro Peaking Power for the time period that such secondary transmission service is requested.

Rates for Energy Associated with Hydro Peaking Power:

(a) *PEAKING ENERGY CHARGE:* $0.0086 per kilowatthour of Peaking Energy delivered; plus (c).

SUPPLEMENTAL ENERGY CHARGE: $0.0086 per kilowatthour of Supplemental Peaking Energy delivered

(b) A purchased power adder of $0.0067 per kilowatthour of Peaking Energy delivered, as adjusted by the Administrator, Southwestern, in accordance with the procedure within this rate schedule. This adder does not apply to:

Supplemental Peaking Energy, or

Sales to any Customer which, by contract, has assumed the obligation to supply energy to fulfill the minimum of 1,200 kilowatthours of Peaking Energy per kilowatt of Peaking Contract Demand during a contract year (Contract Support Arrangements).

Monthly Rates for Transformation Service:

CAPACITY CHARGES FOR TRANSFORMATION SERVICE: A charge of $0.42 per kilowatt will be assessed for capacity used to deliver energy at any point of delivery at which Southwestern provides transformation service for deliveries at voltages of 69 kilovolts or less from higher voltage facilities.

Application of Capacity Charges for Transformation Service

For any particular month, charges for transformation service will be assessed on the greater of (1) that month's actual peak demand, or (2) the highest peak demand recorded during the previous 11 months, at any point of delivery. For the purpose of this Rate Schedule, the peak demand will be based on all deliveries, of both Federal and non-Federal energy, from the System of Southwestern, at such point during such month.

Rates for Ancillary Services:

CAPACITY CHARGES FOR ANCILLARY SERVICES:

(a) Regulation and Frequency Response Service: Monthly rate of $0.09 per kilowatt of Peaking Billing Demand.

(b) Spinning Operating Reserve Service:

Monthly rate of $0.0092 per kilowatt of Peaking Billing Demand

Daily rate of $0.00042 per kilowatt for non-Federal generation inside Southwestern's Balancing Authority Area.

(c) Supplemental Operating Reserve Service:

Monthly rate of $0.0092 per kilowatt of Peaking Billing Demand

Daily rate of $0.00042 per kilowatt for non-Federal generation inside Southwestern's Balancing Authority Area.

(d) Energy Imbalance Service: $0.0 per kilowatt for all reservation periods.

Availability of Ancillary Services

Regulation and Frequency Response Service and Energy Imbalance Service are available only for deliveries of power and energy to load within Southwestern's Balancing Authority Area. Spinning and Supplement Operating Reserve Services are

available only for deliveries of non-Federal power and energy generated by resources located within Southwestern's Balancing Authority Area and for deliveries of all Hydro Peaking Power and associated energy from and within Southwestern's Balancing Authority Area. Where available, such Ancillary Services must be taken from Southwestern; unless, arrangements are made in accordance with the "Provision of Ancillary Services by Others" section of this rate schedule.

Application of Ancillary Services Charges

For any month, the charges for Ancillary Services listed above for deliveries of Hydro Peaking Power shall be based on the Peaking Billing Demand.

The daily charge for Spinning and Supplemental Operating Reserve Services for non-Federal generation inside Southwestern's Balancing Authority Area shall be applied to the greater of Southwestern's previous day's estimate of the peak, or the actual peak, in kilowatts, of the internal non-Federal generation.

Provision of Ancillary Services by Others

Customers for which Ancillary Services are made available as specified above, must inform Southwestern by written notice of the Ancillary Services which they do *not* intend to take and purchase from Southwestern, and of their election to provide all or part of such Ancillary Services from their own resources or from a third party.

Subject to Southwestern's approval of the ability of such resources or third parties to meet Southwestern's technical and operational requirements for provision of such Ancillary Services, the Customer may change the Ancillary Services which it takes from Southwestern and/or from other sources at the beginning of any month upon the greater of 60 days notice or upon completion of any necessary equipment modifications necessary to accommodate such change;

Provided; that if the Customer chooses not to take Regulation and Frequency Response Service, which includes the associated Regulation Purchased Adder, the Customer must pursue these services from a different host Balancing Authority; thereby moving all metered loads and resources from Southwestern's Balancing Authority Area to the Balancing Authority Area of the new host Balancing Authority. Until such time as that meter reconfiguration is accomplished, the Customer will be charged for the Regulation and Frequency Response Service and Regulation Purchased Adder then in effect. The Customer must notify Southwestern by July 1 of this choice, to be effective January 1 of the subsequent calendar year. Provided; that such Customers shall be assessed for all costs incurred by Southwestern for the Regulation Purchased Adder for the calendar year in which they give notice. Such assessment will be paid in twelve equal monthly payments during the subsequent calendar year.

Regulation Purchased Adder

From time to time, at Southwestern's sole discretion, Southwestern will make a determination that additional regulation purchases are necessary in order to meet its Balancing Authority Area requirements. With the exception of the initial year of implementation, this Regulation Purchased Adder will be estimated annually before May 1, and Southwestern will provide written notice to Customers of the estimated Regulation Purchased Adder charge to be recovered in the next calendar year. Provided; that should Southwestern incur additional costs beyond the estimate, such cost will be included in the Regulation Purchased Adder for that same calendar year.

The monthly charge will be placed into effect from January 1 through December 31. The cost for such Regulation Purchased Adder shall be recovered by Customers located within Southwestern's Balancing Authority Area on a non-coincident peak load-ratio share (LRS) basis, divided into twelve equal monthly payments. If the Regulation Purchased Adder is determined and applied under rate schedule NFTS–09, then it shall not be applied here.

The Regulation Purchased Adder is based on the following formula rate, calculated to include the costs incurred by Southwestern for regulation purchases for the previous calendar year.

REGULATION PURCHASED ADDER FORMULA:

$RPA = (LRS_{customer} \times RP) \div 12$

Where:

$LRS_{customer}$ = (Net Load + Generation for the Customer Peak Hour) ÷ Balancing Area Authority Non-Coincident Peak Load

RP = (Dollar per MWh of Regulation Purchased − Supplemental Energy Rate) × Total MWh of Regulation Purchased.

With factors defined as follows:

RPA = The Customer's specific monthly dollar amount of Regulation Purchased Adder.

$LRS_{customer}$ = The ratio of net load and generation for the customer peak hour in the previous calendar year, to the sum of the non-coincident net load and generation for each customer in the Balancing Authority Area for the same period.

RP = The dollar amount per megawatthour of regulation purchased, less the supplemental energy rate times the total megawatthour of regulation purchased.

Limitations on Energy Imbalance Service

Energy Imbalance Service primarily applies to deliveries of power and energy which are required to satisfy a Customer's load. As Hydro Peaking Power and associated energy are limited by contract, the Energy Imbalance Service bandwidth specified for Non-Federal Transmission Service does not apply to deliveries of Hydro Peaking Power, and therefore Energy Imbalance Service is not charged on such deliveries. Customers who consume a capacity of Hydro Peaking Power greater than their Peaking Contract Demand may be subject to a Capacity Overrun Penalty.

Application of Capacity Overrun Penalty

Customers which have loads within Southwestern's Balancing Authority Area are obligated by contract to provide resources, over and above the Hydro Peaking Power and associated energy purchased from Southwestern, sufficient to meet their loads. A Capacity Overrun Penalty shall be applied only when the formulas provided in Customers' contracts indicate an overrun on Hydro Peaking Power, *and* investigation determines that all resources, both firm and non-firm, which were available at the time of the apparent overrun were insufficient to meet the Customer's load.

CAPACITY OVERRUN PENALTY

For each hour during which Hydro Peaking Power was provided at a rate greater than that to which the Customer is entitled, the Customer will be charged a capacity overrun penalty at the following rates:

Months associated with charge	Rate per kilowatt
March, April, May, October, November, December	$0.15
January, February, June, July, August, September	$0.30

Application of Energy Overrun Penalty:

By contract, the Customer is subject to limitations on the maximum amounts of Peaking Energy which may be scheduled during any month or during any four consecutive months. When the Customer schedules an amount in excess of such maximum amounts for any month, or schedules more than 1,200 hours of Peaking Energy per kilowatt of Peaking Contract Demand in any contract year, such Customer is subject to the Energy Overrun Penalty.

ENERGY OVERRUN PENALTY: For each kilowatthour of overrun: $0.0946 per kilowatthour.

Real Power Losses

Customers are required to self-provide all Real Power Losses for non-Federal energy transmitted by Southwestern on behalf of such Customers under the provisions detailed below.

Real Power Losses are computed as four (4) percent of the total amount of non-Federal energy transmitted by Southwestern. The Customer's Monthly Real Power Losses are computed each month on a megawatthour basis as follows:

$ML = .04 \times NFE$

with the factors defined as follows:

ML = The total monthly loss energy, rounded to the nearest megawatthour, to be scheduled by a Customer for receipt by Southwestern for Real Power Losses associated with non-Federal energy transmitted on behalf of such Customer; and

NFE = The amount of non-Federal energy that was transmitted by Southwestern on behalf of a Customer during a particular month.

The Customer must schedule or cause to be scheduled to Southwestern, Real Power Losses for which it is responsible subject to the following conditions:

(1) The Customer shall schedule and deliver real power losses back to Southwestern during the second month after they were incurred by Southwestern in the transmission of the Customer's non-Federal power and energy over the System of Southwestern.

(2) On or before the twentieth day of each month, Southwestern shall determine the amount of non-Federal loss energy it

provided on behalf of the Customer during the previous month and provide a written schedule to the Customer setting forth hour-by-hour the quantities of non-Federal energy to be delivered to Southwestern as losses during the next month.

(3) Real Power Losses not delivered to Southwestern by the Customer, according to the schedule provided, during the month in which such losses are due shall be billed by Southwestern to the Customer to adjust the end-of-month loss energy balance to 0 megawatthours and the Customer shall be obliged to purchase such energy at the following rates:

Months associated with charge	Rate per kilowatthour
March, April, May, October, November, December	$0.15
January, February, June, July, August, September	$0.30

(4) Real Power Losses delivered to Southwestern by the Customer in excess of the losses due during the month shall be purchased by Southwestern from the Customer at a rate per megawatthour equal to Southwestern's rate per megawatthour for Supplemental Peaking Energy, as set forth in Southwestern's then-effective Rate Schedule for hydro peaking power to adjust such hourly end-of-month loss energy balance to 0 megawatthours.

Requirements Related to Power Factor: Any Customer served from facilities owned by or available by contract to Southwestern will be required to maintain a power factor of not less than 95 percent and will be subject to the following provisions.

Determination of Power Factor: The power factor will be determined for all Demand Periods and shall be calculated under the formula:

$$PF = (kWh) \div \sqrt{\left(kWh^2 + rkVAh^2\right)},$$

with the factors defined as follows:

PF = the power factor for any Demand Period of the month.

kWh = the total quantity of energy which is delivered during such Demand Period to the point of delivery or interconnection.

rkVAh = the total quantity of reactive kilovolt-ampere-hours (kvars) delivered during such Demand Period to the point of delivery or interconnection.

Power Factor Penalty and Assessment: The Customer shall be assessed a penalty for all Demand Periods of a month where the power factor is less than 95 percent lagging. For any Demand Period during a particular month such penalty shall be in accordance with the following formula:

$$C = D \times (.95 - LPF) \times \$0.10$$

with the factors defined as follows:

C = The charge in dollars to be assessed for any particular Demand Period of such month that the Determination of Power Factor "PF" is calculated to be less than 95 percent lagging.

D = The Customer's demand in kilowatts at the point of delivery for such Demand Period in which a low power factor was calculated.

LPF = The lagging power factor, if any, determined by the formula "PF" for such Demand Period.

If C is negative, then C = zero (0).

Application of Power Factor Penalty: The Power Factor Penalty is applicable to radial interconnections with the System of Southwestern. The total Power Factor Penalty for any month shall be the sum of all charges "C" for all Demand Periods of such month. No penalty is assessed for leading power factor. Southwestern, in its sole judgment and at its sole option, may determine whether power factor calculations should be applied to a single physical point of delivery or to multiple physical points of delivery where a Customer has a single, electrically integrated load served through multiple points or interconnections. The general criteria for such decision shall be that, given the configuration of the Customer's and Southwestern's systems, Southwestern will determine, in its sole judgment and at its sole option, whether the power factor calculation more accurately assesses the detrimental impact on Southwestern's system when the above formula is calculated for a single physical point of delivery or for a combination of physical points or for an interconnection as specified by an Interconnection Agreement.

Southwestern, at its sole option, may reduce or waive power factor penalties when, in Southwestern's sole judgment, low power factor conditions were not detrimental to the System of Southwestern due to particular loading and voltage conditions at the time the power factor dropped below 95 percent lagging.

Adjustment for Reduction in Service: If, during any month, the quantity of Peaking Contract Demand of Southwestern's 1200 hour peaking power sales customers that is scheduled by the customer for delivery is reduced by Southwestern for a period or periods of not less than two consecutive hours by reason of an outage caused by either an Uncontrollable Force or by the installation, maintenance, replacement or malfunction of generation, transmission and/or related facilities on the System of Southwestern, or insufficient pool levels, the Customer's capacity charges for such month will be reduced for each such reduction in service by an amount computed under the formula:

$$R = (C \times K \times H) \div S$$

with the factors defined as follows:

R = the dollar amount of reduction in the monthly total capacity charges for a particular reduction of not less than two consecutive hours during any month, except that the total amount of any such reduction shall not exceed the product of the Customer's capacity charges associated with Hydro Peaking Power times the Peaking Billing Demand.

C = the Customer's capacity charges associated with Hydro Peaking Power for the Peaking Billing Demand for such month.

K = the reduction in kilowatts in Peaking Billing Demand for a particular event.

H = the number of hours duration of such particular reduction.

S = the number of hours that Peaking Energy is scheduled during such month, but not less than 60 hours times the Peaking Contract Demand.

Such reduction in charges shall fulfill Southwestern's obligation to deliver Peaking Power and Peaking Energy.

Procedure for Determining Southwestern's Net Purchased Power Adder Adjustment

Not more than twice annually, the Purchased Power Adder of $.0067 (6.7 mills) per kilowatthour of Peaking Energy, as noted in this Rate Schedule, may be adjusted by the Administrator, Southwestern, by an amount up to a total of ±$.0067 (6.7 mills) per kilowatthour per year, as calculated by the following formula:

$$ADJ = (PURCH - EST + DIF) \div SALES$$

with the factors defined as follows:

ADJ = the dollar amount of the total adjustment, plus or minus, to be applied to the Net Purchased Power Adder, rounded to the nearest $.0001 per kilowatthour, provided that the total ADJ to be applied in any year shall not vary from the then-effective ADJ by more than $.0067 per kilowatthour;

PURCH = the actual total dollar cost of Southwestern's System Direct Purchases as accounted for in the financial records of the Southwestern Federal Power System for the period;

EST = the estimated total dollar cost ($15,064,500 per year) of Southwestern's System Direct Purchases used as the basis for the Purchased Power Adder of $.0067 per kilowatthour of Peaking Energy;

DIF = the accumulated remainder of the difference in the actual and estimated total dollar cost of Southwestern's System Direct Purchases since the effective date of the currently approved Purchased Power Adder set forth in this rate schedule, which remainder is not projected for recovery through the ADJ in any previous periods;

SALES = the annual Total Peaking Energy sales projected to be delivered (2,241,300,000 KWh per year) from the System of Southwestern, which total was used as the basis for the $.0067 per kilowatthour Purchased Power Adder.

UNITED STATES DEPARTMENT OF ENERGY SOUTHWESTERN POWER ADMINISTRATION

RATE SCHEDULE NFTS–09[1] WHOLESALE RATES FOR NON–FEDERAL TRANSMISSION/INTERCONNECTION FACILITIES SERVICE

Effective: During the period January 1, 2010, through September 30, 2013, in accordance with Rate Order No. SWPA–62 issued by the Deputy Secretary of Energy on *December 30, 2009.*

Available: In the region where Southwestern Power Administration (Southwestern) owns and operates high-voltage transmission lines and related facilities, and/or has contractual rights to

[1] Supersedes Rate Schedule NFTS—06A

such transmission facilities owned by others (System of Southwestern).

Applicable: To Customers which have executed Service Agreements with Southwestern for the transmission of non-Federal power and energy over the System of Southwestern or for its use for interconnections. Southwestern will provide services over those portions of the System of Southwestern in which the Administrator, Southwestern, in his or her sole judgment, has determined that uncommitted transmission and transformation capacities in the System of Southwestern are and will be available in excess of the capacities required to market Federal power and energy pursuant to Section 5 of the Flood Control Act of 1944 (58 Stat. 887,890; 16 U.S.C. 825s).

Character and Conditions of Service: Service will be provided as 3-phase, alternating current, at approximately 60 Hertz, and at the voltage level of the point(s) specified by Service Agreement or Transmission Service Transaction.

Definitions of Terms:

A Customer is the entity which is utilizing and/or purchasing services from Southwestern pursuant to this rate schedule.

A "Service Agreement" is a contract executed between a Customer and Southwestern for the transmission of non-Federal power and energy over the System of Southwestern or for interconnections. Service Agreements include:

"Firm Transmission Service Agreements" that provide for reserved transmission capacity on a firm basis, for a particular point-to-point delivery path.

"Non-Firm Transmission Service Agreements" that provide for the Customer to request transmission service on a non-firm basis.

"Network Transmission Service Agreements" that provide for the Customer to request firm transmission service for the delivery of capacity and energy from the Customer's network resources to the Customer's network load, for a period of one year or more.

"Interconnection Agreements" that provide for the use of the System of Southwestern and recognize the exchange of mutual benefits for such use or provide for application of a charge for Interconnection Facilities Service.

A "Service Request" is made under a Transmission Service Agreement through the Southwest Power Pool, Inc. (SPP) Open Access Same-Time Information System (OASIS) for reservation of transmission capacity over a particular point-to-point delivery path for a particular period. When a Service Request is approved by SPP, it becomes a "Transmission Service Transaction." The Customer must submit hourly schedules for actual service in addition to the Service Request.

"Firm Point-to-Point Transmission Service" is transmission service reserved on a firm basis between specific points of receipt and delivery pursuant to either a Firm Transmission Agreement or to a Transmission Service Transaction. "Non-Firm Point-to-Point Transmission Service" is transmission service reserved on a non-firm basis for specific points of receipt and delivery pursuant to a Transmission Service Transaction. "Network Integration Transmission Service" is transmission service provided under Part III of Southwestern's Open Access Transmission Service Tariff which provides the Customer with firm transmission service for the delivery of capacity and energy from the Customer's resources to the Customer's load.

"Secondary Transmission Service" is associated with Firm Point-to-Point Transmission Service and Network Integration Transmission Service. For Firm Point-to-Point Transmission Service, it consists of transmission service provided on an as-available, non-firm basis, scheduled within the limits of a particular capacity reservation for transmission service, and scheduled from points of receipt, or to points of delivery, other than those designated in a Long-Term Firm Transmission Agreement or a Transmission Service Transaction for Firm Point-to-Point Transmission Service. For Network Integration Transmission Service, Secondary Transmission Service consists of transmission service provided on an as-available, non-firm basis, from resources other than the Network Resources designated in a Network Transmission Service Agreement, to meet the Customer's Network Load. The charges for Secondary Transmission Service, other than Ancillary Services, are included in the applicable capacity charges for Firm Point-to-Point Transmission Service and Network Integration Transmission Service.

The "Demand Period" used to determine a maximum integrated rate of delivery for the purposes of power accounting is the 60-minute period which begins with the change of hour. The term "Peak Demand" means the highest rate of delivery, in kilowatts, for any Demand Period during a particular month, at any particular point of delivery or interconnection.

For the purposes of this rate schedule, the term "Point of Delivery" is used to mean either a single physical point to which electric power and energy are delivered from the System of Southwestern, or a specified set of delivery points which together form a single, electrically integrated load. Peak Demand for such set of points is computed as the coincidental highest rate of delivery among the specified points rather than as the sum of peak demands for each individual physical point.

"Ancillary Services" are those services necessary to support the transmission of capacity and energy from resources to loads while maintaining reliable operation of the System of Southwestern in accordance with good utility practice. Ancillary Services include:

"Scheduling, System Control, and Dispatch Service" ("Scheduling") is provided by Southwestern as Balancing Authority Area operator and is in regard to interchange and load-match scheduling and related system control and dispatch functions.

"Reactive Supply and Voltage Control from Generation Sources Service" ("Reactive Supply") is provided at transmission facilities in the System of Southwestern to produce or absorb reactive power and to maintain transmission voltages within specific limits.

"Regulation and Frequency Response Service" is the continuous balancing of generation and interchange resources accomplished by raising or lowering the output of on-line generation as necessary to follow the moment-by-moment changes in load and to maintain frequency within a Balancing Authority Area.

"Spinning Operating Reserve Service" maintains generating units on-line, but loaded at less than maximum output, which may be used to service load immediately when disturbance conditions are experienced due to a sudden loss of generation or load.

"Supplemental Operating Reserve Service" provides an additional amount of operating reserve sufficient to reduce Area Control Error to zero within 10 minutes following loss of generating capacity which would result from the most severe single contingency.

"Energy Imbalance Service" corrects for differences over a period of time between schedules and actual hourly deliveries of energy to a load.

"Interconnection Facilities Service" provides for the use of the System of Southwestern to deliver energy and/or provide system support at an interconnection.

Rates for Firm Point-to-Point Transmission Service:

CAPACITY CHARGES FOR FIRM TRANSMISSION SERVICE:

Monthly: $1.18 per kilowatt of transmission capacity reserved in increments of one month of service or invoiced in accordance with a longer term agreement

Weekly: $0.295 per kilowatt of transmission capacity reserved in increments of one week of service

Daily: $0.0536 per kilowatt of transmission capacity reserved in increments of one day of service

Service Associated with Capacity Charges for Firm Point-to-Point Transmission Service: The capacity charge for firm transmission service includes Secondary Transmission Service, but does not include charges for Ancillary Services associated with actual schedules.

Application of Capacity Charges for Firm Point-to-Point Transmission Service: Capacity charges for firm transmission service are applied to quantities reserved by contract under a Firm Transmission Agreement or in accordance with a Transmission Service Transaction.

Customers, unless otherwise specified by contract, will be charged on the greatest of (1) the Peak Demand at any particular point of delivery during a particular month, rounded up to the nearest whole megawatt, or (2) the highest Peak Demand recorded at such point of delivery during any of the previous 11 months, rounded up to the nearest whole megawatt, or (3) the capacity reserved by contract; which amount shall be considered such Customer's reserved capacity. Secondary Transmission Service for such Customers shall be limited during any month to the most recent Peak Demand on which a particular Customer is billed or to the capacity reserved by contract, whichever is greater.

Rates for Non-Firm Point-to-Point Transmission Service:

CAPACITY CHARGES FOR NON–FIRM TRANSMISSION SERVICE:

Monthly: 80 percent of the firm monthly charge of transmission capacity reserved in increments of one month of service

Weekly: 80 percent of the firm monthly charge divided by 4 of transmission capacity reserved in increments of one week of service

Daily: 80 percent of the firm monthly charge divided by 22 of transmission capacity reserved in increments of one day of service

Hourly: 80 percent of the firm monthly charge divided by 352 of transmission capacity reserved in increments of one hour of service

Application of Charges for Non-Firm Point-to-Point Transmission Service: Capacity charges for Non-Firm Transmission Service are applied to quantities reserved under a Transmission Service Transaction, and do not include charges for Ancillary Services.

Rates for Network Integration Transmission Service:

ANNUAL REVENUE REQUIREMENT FOR NETWORK INTEGRATION SERVICE: $13,107,700

MONTHLY REVENUE REQUIREMENT FOR NETWORK INTEGRATION SERVICE: $1,092,308

NET CAPACITY AVAILABLE FOR NETWORK INTEGRATION SERVICE: 929,000 kW

CAPACITY CHARGE FOR NETWORK INTEGRATION TRANSMISSION SERVICE: $1.18 per kilowatt of Network Load ($1,092,308/929,000 kW)

Application of Charge for Network Integration Transmission Service:

Network Integration Transmission Service is available only for deliveries of non-Federal power and energy, and is applied to the Customer utilizing such service exclusive of any deliveries of Federal power and energy. The capacity on which charges for any particular Customer utilizing this service is determined on the greatest of (1) the Peak Demand at any particular point of delivery during a particular month, rounded up to the nearest whole megawatt, or (2) the highest Peak Demand recorded at such point of delivery during any of the previous 11 months, rounded up to the nearest whole megawatt.

For those Customers taking Network Integration Transmission Service who are also taking delivery of Federal Power and Energy, the Peak Demand shall be determined by subtracting the energy scheduled for delivery of Federal Power and Energy for any hour from the metered demand for such hour.

Secondary transmission Service for such Customers shall be limited during any month to the most recent Peak Demand on which a particular Customer is billed. Charges for Ancillary Services shall also be assessed.

Real Power Losses

Customers are required to self-provide all Real Power Losses for non-Federal energy transmitted by Southwestern on behalf of such Customers under the provisions detailed below.

Real Power Losses are computed as four (4) percent of the total amount of non-Federal energy transmitted by Southwestern. The Customer's Monthly Real Power Losses are computed each month on a megawatthour basis as follows:

$ML = .04 \times NFE$

with the factors defined as follows:

ML = The total monthly loss energy, rounded to the nearest megawatthour, to be scheduled by a Customer for receipt by Southwestern for Real Power Losses associated with non-Federal energy transmitted on behalf of such Customer; and

NFE = The amount of non-Federal energy that was transmitted by Southwestern on behalf of a Customer during a particular month.

The Customer must schedule or cause to be scheduled to Southwestern, Real Power Losses for which it is responsible subject to the following conditions:

(1) The Customer shall schedule and deliver real power losses back to Southwestern during the second month after they were incurred by Southwestern in the transmission of the Customer's non-Federal power and energy over the System of Southwestern.

(2) On or before the twentieth day of each month, Southwestern shall determine the amount of non-Federal loss energy it provided on behalf of the Customer during the previous month and provide a written schedule to the Customer setting forth hour-by-hour the quantities of non-Federal energy to be delivered to Southwestern as losses during the next month.

(3) Real Power Losses not delivered to Southwestern by the Customer, according to the schedule provided, during the month in which such losses are due shall be billed by Southwestern to the Customer to adjust the end-of-month loss energy balance to 0 megawatthours and the Customer shall be obliged to purchase such energy at the following rates:

Months associated with charge	Rate per kilowatt hour
March, April, May, October, November, December	$0.15
January, February, June, July, August, September	$0.30

(4) Real Power Losses delivered to Southwestern by the Customer in excess of the losses due during the month shall be purchased by Southwestern from the Customer at a rate per megawatthour equal to Southwestern's rate per megawatthour for Supplemental Peaking Energy, as set forth in Southwestern's then-effective Rate Schedule for hydro peaking power to adjust such hourly end-of-month loss energy balance to 0 megawatthours.

Monthly Capacity Charges for Transformation Service: A charge of $0.42 per kilowatt will be assessed for capacity used to deliver energy at any point of delivery at which Southwestern provides transformation for deliveries at voltages of 69 kilovolts or less from higher voltage facilities.

Application of Capacity Charges for Transformation Service: For any particular month, charges for transformation service will be assessed on the greater of (1) that month's actual Peak Demand, or (2) the highest Peak Demand recorded during the previous 11 months. For the purpose of this rate schedule, the Peak Demand will be based on all deliveries, of both Federal and non-Federal energy, from the System of Southwestern, at such point during such month.

Rates for Ancillary Services:

CAPACITY CHARGES FOR ANCILLARY SERVICES ASSOCIATED WITH TRANSMISSION SERVICES:

(a) Scheduling, System Control, and Dispatch Service:

Monthly: $0.07 per kilowatt of transmission capacity reserved in increments of one month of service or invoiced in accordance with a Long-Term Firm Transmission Agreement or Network Transmission Service Agreement

Weekly: $0.018 per kilowatt of transmission capacity reserved in increments of one week of service

Daily: $0.0032 per kilowatt of transmission capacity reserved in increments of one day of service

Hourly: $0.00020 per kilowatt of transmission energy delivered as non-firm transmission service.

(b) Reactive Supply and Voltage Control from Generation Sources Service:

Monthly: $0.04 per kilowatt of transmission capacity reserved in increments of one month of service or invoiced in accordance with a Long-Term Firm Transmission Agreement or Network Transmission Service Agreement

Weekly: $0.010 per kilowatt of transmission capacity reserved in increments of one week of service

Daily: $0.0018 per kilowatt of transmission capacity reserved in increments of one day of service

Hourly: $0.00011 per kilowatt of transmission energy delivered as non-firm transmission service.

(c) Regulation and Frequency Response Service:

Monthly: $0.09 per kilowatt of transmission capacity reserved in increments of one month of service or invoiced in accordance with a Long-Term Firm Transmission Agreement or Network Transmission Service Agreement

Weekly: $0.023 per kilowatt of transmission capacity reserved in increments of one week of service

Daily: $0.0041 per kilowatt of transmission capacity reserved in increments of one day of service

Hourly: $0.00026 per kilowatt of transmission energy delivered as non-firm transmission service.

(d) Spinning Operating Reserve Service:

Monthly: $0.0092 per kilowatt of transmission capacity reserved in increments of one month of service or invoiced in accordance with a Long-Term Firm Transmission Agreement or Network Transmission Service Agreement

Weekly: $0.0023 per kilowatt of transmission capacity reserved in increments of one week of service

Daily: $0.00042 per kilowatt of transmission capacity reserved in increments of one day of service

Hourly: $0.00003 per kilowatt of transmission energy delivered as non-firm transmission service.

(e) Supplemental Operating Reserve Service:

Monthly: $0.0092 per kilowatt of transmission capacity reserved in increments of one month of service or invoiced in accordance with a Long-Term Firm Transmission Agreement or Network Transmission Service Agreement

Weekly: $0.0023 per kilowatt of transmission capacity reserved in increments of one week of service

Daily: $0.00042 per kilowatt of transmission capacity reserved in increments of one day of service

Hourly: $0.00003 per kilowatt of transmission energy delivered as non-firm transmission service.

(f) Energy Imbalance Service: $0.0 per kilowatt for all periods of reservation.

Availability of Ancillary Services: Scheduling and Reactive Supply Services are available for all transmission services in and from the System of Southwestern and shall be provided by Southwestern. Regulation and Frequency Response Service and Energy Imbalance Service listed above are available only for deliveries of power and energy serving load within Southwestern's Balancing Authority Area and shall be provided by Southwestern, unless, subject to Southwestern's approval, they are provided by others. Spinning and Supplemental Operating Reserve Services are available only for deliveries of power and energy generated by resources located within Southwestern's Balancing Authority Area and shall be provided by Southwestern, unless, subject to Southwestern's approval, they are provided by others.

Application of Ancillary Services Charges: Charges for all Ancillary Services are applied to the reserved or network transmission service taken by the Customer in accordance with the rates listed above when such services are provided by Southwestern.

The charges for Ancillary Services are considered to include Ancillary Services for any Secondary Transmission Service, except in cases where Ancillary Services (c) through (f) are applicable to a Secondary Transmission Service transaction, but are not applicable to the firm capacity reservation under which Secondary Transmission Service is provided. When charges for Ancillary Services are applicable to Secondary Transmission Service, the charge for the Ancillary Service shall be the hourly rate applied to all energy transmitted utilizing the Secondary Transmission Service.

Provision of Ancillary Services by Others: Customers for which Ancillary Services (c) through (f) are made available as specified above must inform Southwestern by written notice of the Ancillary Services which they do *not* intend to take and purchase from Southwestern, and their election to provide all or part of such Ancillary Services from their own resources or a third party. Such notice requirements also apply to requests for Southwestern to provide Ancillary Services when such services are available as specified above.

Subject to Southwestern's approval of the ability of such resources or third parties to meet Southwestern's technical and operational requirements for provision of such Ancillary Services, the customer may change the Ancillary Services which it takes from Southwestern and/or from other sources at the beginning of any month upon the greater of 60 days written notice or upon the completion of any necessary equipment modifications necessary to accommodate such change;

Provided; that if the Customer chooses not to take Regulation and Frequency Response Service, which includes the associated Regulation Purchased Adder, the Customer must pursue these services from a different host Balancing Authority; thereby moving all metered loads and resources from Southwestern's Balancing Authority Area to the Balancing Authority Area of the new host Balancing Authority. Until such time as that meter reconfiguration is accomplished, the Customer will be charged for the Regulation and Frequency Response Service and Adder then in effect. The Customer must notify Southwestern by July 1 of this choice, to be effective January 1 of the subsequent calendar year. Provided; that such Customers shall be assessed for all costs incurred by Southwestern for the Regulation Purchased Adder for the calendar year in which they give notice. Such assessment will be paid in twelve equal monthly payments during the subsequent calendar year.

Regulation Purchased Adder: From time to time, at Southwestern's sole discretion, Southwestern will make a determination that additional regulation purchases are necessary in order to meet its Balancing Authority Area requirements. With the exception of the initial year of implementation, this Regulation Purchased Adder will be estimated annually before May 1, and Southwestern will provide written notice to Customers of the estimated Regulation Purchased Adder charge to be recovered in the next calendar year. Provided; that should Southwestern incur additional costs beyond the estimate, such cost will be included in the Regulation Purchased Adder for that same calendar year.

The monthly charge will be placed into effect from January 1 through December 31. The cost for such Regulation Purchased Adder shall be recovered by Customers located within Southwestern's Balancing Authority Area on a non-coincident peak load-ratio share (LRS) basis, divided into twelve equal monthly payments. If the Regulation Purchased Adder is determined and applied under rate schedule P–09, then it shall not be applied here.

The Regulation Purchased Adder is based on the following formula rate, calculated to include the costs incurred by Southwestern for regulation purchases for the previous calendar year.

REGULATION PURCHASED ADDER FORMULA

$$RPA = (LRS_{customer} \times RP) \div 12$$

Where:

$LRS_{customer}$ = (Net Load + Generation for the Customer Peak Hour) ÷ Balancing Area Authority Non-Coincident Peak Load.

RP = (Dollar per MWh of Regulation Purchased—Supplemental Energy Rate) × Total MWh of Regulation Purchased.

With factors defined as follows:

RPA = The Customer's specific monthly dollar amount of Regulation Purchased Adder.

$LRS_{customer}$ = The ratio of net load and generation for the customer peak hour in the previous calendar year, to the sum of the non-coincident net load and generation for each customer in the Balancing Authority Area for the same period.

RP = The dollar amount per megawatthour of regulation purchased, less the supplemental energy rate times the total megawatthour of regulation purchased.

Limitations on Energy Imbalance Service: Energy Imbalance Service is authorized for use only within a bandwidth of ±1.5 percent of the actual requirements of the load at a particular point of delivery, for any hour, compared to the resources scheduled to meet such load during such hour. Deviations which are greater than ±1.5 percent, but which are less than ±2,000 kilowatts, are considered to be within the authorized bandwidth. Deviations outside the authorized bandwidth are subject to a Capacity Overrun Penalty.

Energy delivered or received within the authorized bandwidth for this service is accounted for as an inadvertent flow and will be netted against flows in the future. The inadvertent flow in any given hour will only be offset with the flows in the corresponding hour of a day in the same category. The two categories of days are weekdays and weekend days/North American Electric Reliability Council holidays. This process will result in a separate inadvertent accumulation for each hour of the two categories of days. The hourly accumulations in the current month will be added to the hourly inadvertent balances from the previous month, resulting in a month-end balance for each hour.

The Customer is required to adjust the scheduling of resources in such a way as to reduce the accumulation towards zero. It is recognized that the inadvertent hourly flows can be both negative and positive, and that offsetting flows should deter a significant accumulation of inadvertent. In the event any hourly month-end balance exceeds 12 MWHs, the excess will be subject to the *Application of Capacity Overrun Penalty* or the *Unauthorized Use of Energy Imbalance Service by Overscheduling of Resources* provisions, depending on the direction of the accumulation.

Application of Capacity Overrun Penalty: Customers, who receive deliveries within Southwestern's Balancing Authority Area, are obligated to provide resources sufficient to meet their loads. Such obligation is not related to the amount of transmission capacity that such Customers may have reserved for transmission service to a particular load. Customers whose resources are scheduled by Southwestern are not

subject to this provision. In the event that a Customer under schedules its resources to meet its load, resulting in a difference between resources and actual metered load (adjusted for transformer losses as applicable) outside the authorized bandwidth for Energy Imbalance Service for any hour, then such Customer is subject to the following penalty:

CAPACITY OVERRUN PENALTY: For each hour during which energy flows outside the authorized bandwidth, the Customer will be obliged to purchase such energy at the following rates:

Months associated with charge	Rate per kilowatt
March, April, May, October, November, December	$0.15
January, February, June, July, August, September	0.30

Unauthorized Use of Energy Imbalance Service by Overscheduling of Resources: In the event that a Customer schedules greater resources than are needed to meet its load, such that energy flows at rates beyond the authorized bandwidth for the use of Energy Imbalance Service, Southwestern retains such energy at no cost to Southwestern and with no obligation to return such energy. Customers whose resources are scheduled by Southwestern are not subject to this provision.

Application of Charge for Interconnection Facilities Service: Any Customer that requests an interconnection from Southwestern which, in Southwestern's sole judgment and at its sole option, does not provide commensurate benefits or compensation to Southwestern for the use of its facilities shall be assessed a capacity charge for Interconnection Facilities Service. For any month, charges for Interconnection Facilities Service shall be assessed on the greater of (1) that month's actual Peak Demand, or (2) the highest Peak Demand recorded during the previous eleven months, as metered at the interconnection. The use of Interconnection Facilities Service will be subject to power factor provisions as specified in this rate schedule. The interconnection customer shall also schedule and deliver Real Power Losses pursuant to the provisions of this Rate Schedule based on metered flow through the interconnection where Interconnection Facilities Services is assessed.

Rate for Interconnection Facilities Service: The monthly capacity charge for Interconnection Facilities Service: $1.18 per kilowatt

Requirements Related to Power Factor: Any Customer served from facilities owned by or available by contract to Southwestern will be required to maintain a power factor of not less than 95 percent and will be subject to the following provisions.

Determination of Power Factor: The power factor will be determined for all Demand Periods and shall be calculated under the formula:

$$PF = kWh \div \sqrt{\left(kWh^2 + rkVAh^2\right)},$$

with the factors defined as follows:

PF = the power factor for any Demand Period of the month.

kWh = the total quantity of energy which is delivered during such Demand Period to the point of delivery or interconnection.

rkVAh = the total quantity of reactive kilovolt-ampere-hours (kvars) delivered during such Demand Period to the point of delivery or interconnection.

Power Factor Penalty and Assessment: The Customer shall be assessed a penalty for all Demand Periods of a month where the power factor is less than 95 percent lagging. For any Demand Period during a particular month such penalty shall be in accordance with the following formula:

$$C = D \times (.95 - LPF) \times \$0.10$$

with the factors defined as follows:

C = The charge in dollars to be assessed for any particular Demand Period of such month that the Determination of Power Factor "PF" is calculated to be less than 95 percent lagging.

D = The Customer's demand in kilowatts at the point of delivery for such Demand Period in which a low power factor was calculated.

LPF = The lagging power factor, if any, determined by the formula "PF" for such Demand Period.

If C is negative, then C = zero (0).

Application of Power Factor Penalty: The Power Factor Penalty is applicable to radial interconnections with the System of Southwestern. The total Power Factor Penalty for any month shall be the sum of all charges "C" for all Demand Periods of such month. No penalty is assessed for leading power factor. Southwestern, in its sole judgment and at its sole option, may determine whether power factor calculations should be applied to a single physical point of delivery or to multiple physical points of delivery where a Customer has a single, electrically integrated load served through multiple points or interconnections. The general criteria for such decision shall be that, given the configuration of the Customer's and Southwestern's systems, Southwestern will determine, in its sole judgment and at its sole option, whether the power factor calculation more accurately assesses the detrimental impact on Southwestern's system when the above formula is calculated for a single physical point of delivery or for a combination of physical points or for an interconnection as specified by an Interconnection Agreement.

Southwestern, at its sole option, may reduce or waive power factor penalties when, in Southwestern's sole judgment, low power factor conditions were not detrimental to the System of Southwestern due to particular loading and voltage conditions at the time the power factor dropped below 95 percent lagging.

UNITED STATES DEPARTMENT OF ENERGY SOUTHWESTERN POWER ADMINISTRATION

RATE SCHEDULE EE–09 [1] *WHOLESALE RATE FOR EXCESS ENERGY*

Effective: During the period January 1, 2010, through September 30, 2013, in accordance with Rate Order No. SWPA–62 issued by the Deputy Secretary of Energy on *December 30, 2009.*

Available: In the marketing area of Southwestern Power Administration (Southwestern), described generally as the States of Arkansas, Kansas, Louisiana, Missouri, Oklahoma, and Texas.

Applicable: To electric utilities which, by contract, may purchase Excess Energy from Southwestern.

Character and Conditions of Service: Three-phase, alternating current, delivered at approximately 60 Hertz, at the nominal voltage and points of delivery specified by contract.

Energy Associated with this Rate Schedule: Excess Energy will be furnished at such times and in such amounts as Southwestern determines to be available.

Transmission and Related Ancillary Services: Transmission service for the delivery of Excess Energy shall be the sole responsibility of such customer purchasing Excess Energy.

Rate for Excess Energy: Energy Charge: $0.0086 per kilowatthour.

[FR Doc. 2010–247 Filed 1–8–10; 8:45 am]

BILLING CODE 6450–01–P

[1] Supersedes Rate Schedule EE–06.

DEPARTMENT OF ENERGY

Federal Energy Regulatory Commission

[Docket No. RM98–1–000]

Records Governing Off-the-Record Communications; Public Notice

January 4, 2010.

This constitutes notice, in accordance with 18 CFR 385.2201(b), of the receipt of prohibited and exempt off-the-record communications.

Order No. 607 (64 FR 51222, September 22, 1999) requires Commission decisional employees, who make or receive a prohibited or exempt off-the-record communication relevant to the merits of a contested proceeding, to deliver to the Secretary of the Commission, a copy of the communication, if written, or a summary of the substance of any oral communication.

Prohibited communications are included in a public, non-decisional file associated with, but not a part of, the decisional record of the proceeding. Unless the Commission determines that the prohibited communication and any responses thereto should become a part

of the decisional record, the prohibited off-the-record communication will not be considered by the Commission in reaching its decision. Parties to a proceeding may seek the opportunity to respond to any facts or contentions made in a prohibited off-the-record communication, and may request that the Commission place the prohibited communication and responses thereto in the decisional record. The Commission will grant such a request only when it determines that fairness so requires. Any person identified below as having made a prohibited off-the-record communication shall serve the document on all parties listed on the official service list for the applicable proceeding in accordance with Rule 2010, 18 CFR 385.2010.

Exempt off-the-record communications are included in the decisional record of the proceeding, unless the communication was with a cooperating agency as described by 40 CFR 1501.6, made under 18 CFR 385.2201(e)(1)(v).

The following is a list of off-the-record communications recently received by the Secretary of the Commission. The communications listed are grouped by docket numbers in ascending order. These filings are available for review at the Commission in the Public Reference Room or may be viewed on the Commission's Web site at *http://www.ferc.gov* using the eLibrary link. Enter the docket number, excluding the last three digits, in the docket number field to access the document. For assistance, please contact FERC, Online Support at *FERCOnlineSupport@ferc.gov* or toll free at (866) 208–3676, or for TTY, contact (202) 502–8659.

Docket No.	File date	Presenter or requestor
Prohibited		
1. IS10–56–000	12–22–09	Nash McMahan.
2. Project 11858–000	12–23–09	Larry Rannals.
3. CP09–6–000, CP09–7–000	12–17–09	John Hempton.
4. CP09–6–000, CP09–7–000	12–17–09	Linda Martin.
5. CP09–6–000, CP09–7–000	12–17–09	Paul Sansone.
Exempt		
1. CP09–6–000, CP09–7–000	12–23–09	Marron Dooney and Jim Miller.
2. CP09–6–000, CP09–7–000	12–23–09	Olivia Schmidt.
3. CP09–6–000, CP09–7–000	12–23–09	Chuck and Cindy Straughan.
4. CP09–6–000	12–14–09	Hon. Ron Wyden.
5. CP09–35–000	12–8–09	John G. Wadsworth.
6. Project No. 3052–000	12–23–09	Mark Aumann.[1]
7. Project No. 3052–000	12–22–09	Hon. Ron Kind.
8. Project No. 13011–000	12–8–09	John Baummer.[2]
9. Project No. 13011–000	12–8–09	John Baummer.[3]

[1] Record of e-mail exchange.
[2] Record of e-mail exchange with Gary Lowe, *et al.*
[3] Record of e-mail exchange with Daniel Heacock.

Kimberly D. Bose,

Secretary.

[FR Doc. 2010–181 Filed 1–8–10; 8:45 am]

BILLING CODE 6717–01–P

ENVIRONMENTAL PROTECTION AGENCY

[OW–FRL–9101–6]

Beaches Environmental Assessment and Coastal Health Act

AGENCY: Environmental Protection Agency (EPA).

ACTION: Notice of Availability of 2010 BEACH Act Grants.

SUMMARY: Section 406(b) of the Clean Water Act (CWA) as amended by the Beaches Environmental Assessment and Coastal Health (BEACH) Act authorizes EPA to award program development and implementation grants to eligible States, territories, Tribes, and local governments to support microbiological monitoring and public notification of the potential for exposure to disease-causing microorganisms in coastal recreation waters, including the Great Lakes. EPA encourages coastal and Great Lakes States and Tribes that have received BEACH Act grants in the past to apply for 2010 BEACH Act grants to implement effective and comprehensive coastal recreation water monitoring and public notification programs ("implementation grants"). EPA also encourages eligible coastal and Great Lakes Tribes to apply for 2010 BEACH Act grants to develop effective and comprehensive coastal recreation water monitoring and public notification programs ("development grants").

DATES: States, Erie County, Pennsylvania, and Tribes that previously received BEACH Act grants must submit applications on or before March 12, 2010. Other eligible Tribes should notify the relevant EPA Regional BEACH Act grant coordinator of their interest in applying for a grant on or before February 25, 2010. Upon receipt of a Tribe's notice of interest, EPA will establish an appropriate application deadline.

ADDRESSES: You must send your application to the appropriate EPA Regional grant coordinator listed in this notice under Section VI, Grant Coordinators.

FOR FURTHER INFORMATION CONTACT: Lars Wilcut, 1200 Pennsylvania Ave., NW., (4305T), Washington, DC 20460. *Telephone:* (202) 566–0447. *E-mail: wilcut.lars@epa.gov.*

SUPPLEMENTARY INFORMATION:

I. Background

What Is the BEACH Act?

The Beaches Environmental Assessment and Coastal Health (BEACH) Act of 2000 amends the Clean Water Act to better protect public health at our nation's beaches through improved water quality standards and beach monitoring and notification programs. The BEACH Act authorizes EPA to award grants to develop and implement monitoring and public notification programs for coastal recreation waters, consistent with EPA's required performance criteria. EPA

published the required performance criteria for grants in its *National Beach Guidance and Required Performance Criteria for Grants* (EPA–823–B–02–004), on July 19, 2002. Currently, all 37 eligible States and Tribes operate beach monitoring and notification programs using BEACH Act grant funds.

What Is the Statutory Authority for BEACH Act Grants?

The general statutory authority for BEACH Act grants is section 406(b) of the Clean Water Act, as amended by the BEACH Act, Public Law 106–284, 114 Stat. 970 (2000). It provides that, "(T)he Administrator may make grants to States and local governments to develop and implement programs for monitoring and notification for coastal recreation waters adjacent to beaches or similar points of access that are used by the public." CWA section 406(b)(2)(A), however, limits EPA's ability to award implementation grants only to those States and Tribes that meet certain requirements (see Section II, Funding and Eligibility, below for information on specific requirements).

What Activities Are Eligible for Funding Under the FY 2010 Grants?

In fiscal year 2010, EPA intends to award grants authorized under CWA section 406(b) to eligible States and Tribes to support the implementation of coastal recreation water monitoring and public notification programs that are consistent with EPA's required performance criteria for implementation grants. Also in fiscal year 2010, EPA intends to award development grants to eligible Tribes to support the development of coastal recreation water monitoring and public notification programs that are consistent with EPA's performance criteria for grants. EPA published the required performance criteria for grants in its *National Beach Guidance and Required Performance Criteria for Grants* (EPA–823–B–02–004), on July 19, 2002. A notice of availability of the document was published in the **Federal Register** (67 FR 47540, July 19, 2002). This document can be found on EPA's Web site at *http://www.epa.gov/waterscience/beaches/grants.* Copies of the document may also be obtained by writing, calling, or *e-mailing:* Office of Water Resource Center, U.S. Environmental Protection Agency, Mail Code RC–4100, 1200 Pennsylvania Avenue, NW., Washington, DC 20460. (*Phone:* 202–566–1731 or *e-mail: center.water-resource@epa.gov.*)

II. Funding and Eligibility

Who Is Eligible To Apply for BEACH Act Grants?

Coastal and Great Lake States that meet the requirements of CWA section 406(b)(2)(A) are eligible for grants in fiscal year 2010 to implement monitoring and notification programs. The definition of the term "State" in CWA section 502 includes the District of Columbia, and current U.S. territories: the Commonwealth of Puerto Rico, the Virgin Islands, Guam, American Samoa, and the Commonwealth of the Northern Mariana Islands. Tribes may also be eligible for BEACH Act grants. In order to be eligible, a Tribe must have coastal recreation waters adjacent to beaches or similar points of access that are used by the public, and the Tribe must demonstrate that it meets the "treatment in the same manner as a State" criteria in CWA section 518(e) for the purposes of receiving a section 406 BEACH Act grant.

Are Local Governments Eligible for Funding?

CWA section 406(b)(2)(B) authorizes EPA to make a grant to a local government for implementation of a monitoring and notification program only if, after July 19, 2003, EPA determines that the State within which the local government has jurisdiction is not implementing a program that meets the requirements of CWA section 406(b), which includes a requirement that the program is consistent with the performance criteria in *National Beach Guidance and Required Performance Criteria for Grants.* EPA has awarded an implementation grant to Erie County, Pennsylvania, the local government implementing the beach monitoring and notification program for all of Pennsylvania's coastal recreation waters. Local governments may contact their EPA Regional Office for further information about BEACH Act grants.

How May Tribes Apply for BEACH Act Development Grants and How Much Funding Is Available for Tribes?

Section 518(e) of the CWA authorizes EPA to treat eligible Indian Tribes in the same manner as States for the purpose of receiving CWA section 406 grant funding. For fiscal year 2010, EPA will make $100,000 available to eligible Tribes. In order to be eligible for a CWA section 406 development grant, a Tribe must have coastal recreation waters adjacent to beaches or similar points of access that are used by the public. The phrase "coastal recreation waters" is defined in CWA section 502(21) to mean the Great Lakes and marine coastal waters (including coastal estuaries) that are designated under CWA section 303(c) for use for swimming, bathing, surfing, or similar water contact activities. The statute explicitly excludes from the definition inland waters and waters upstream of the mouth of a river or stream having an unimpaired natural connection with the open sea. In addition, a Tribe must demonstrate that it meets the "treatment in the same manner as a State" (TAS) criteria contained in CWA section 518(e) for purposes of receiving a CWA section 406 grant. To demonstrate TAS, the Tribe must show that it: (1) Is Federally recognized; (2) has a governing body carrying out substantial governmental duties and powers; (3) will be exercising functions pertaining to waters within the reservation; and (4) is reasonably expected to be capable of carrying out the functions consistent with the CWA and all applicable regulations. EPA encourages those Tribes with coastal recreation waters to contact their EPA Regional BEACH Act grant coordinator for further information regarding the application process as soon as possible.

Are There Any Additional Eligibility Requirements and Grant Conditions Applicable to States and Tribes?

Yes, there are additional eligibility requirements and grant conditions. First, CWA section 406(b)(2)(A) provides that EPA may only award a grant to implement a monitoring and notification program if:

(i) The program is consistent with the performance criteria published by the Administrator under CWA section 406(a);

(ii) The State or local government prioritizes the use of grant funds for particular coastal recreation waters based on the use of the water and the risk to human health presented by pathogens or pathogen indicators;

(iii) The State or local government makes available to the Administrator the factors used to prioritize the use of funds under clause (ii);

(iv) The State or local government provides a list of discrete areas of coastal recreation waters that are subject to the program for monitoring and notification for which the grant is provided that specifies any coastal recreation waters for which fiscal constraints will prevent consistency with the performance criteria under CWA section 406(a); and

(v) The public is provided an opportunity to review the program through a process that provides for

public notice and an opportunity for comment.

Second, CWA section 406(c) requires that as a condition of receipt of a CWA section 406 grant, a State or local government program for monitoring and notification must identify:

(1) Lists of coastal recreation waters in the State, including coastal recreation waters adjacent to beaches or similar points of access that are used by the public;

(2) In the case of a State program for monitoring and notification, the process by which the State may delegate to local governments responsibility for implementing the monitoring and notification program;

(3) The frequency and location of monitoring and assessment of coastal recreation waters based on—

(A) The periods of recreational use of the waters;

(B) The nature and extent of use during certain periods;

(C) The proximity of the waters to known point sources and nonpoint sources of pollution; and

(D) Any effect of storm events on the waters;

(4)(A) The methods to be used for detecting levels of pathogens and pathogen indicators that are harmful to human health; and

(B) The assessment procedures for identifying short-term increases in pathogens and pathogen indicators that are harmful to human health in coastal recreation waters (including increases in relation to storm events);

(5) Measures for prompt communication of the occurrence, nature, location, pollutants involved, and extent of any exceeding of, or likelihood of exceeding, applicable water quality standards for pathogens and pathogen indicators to—

(A) The Administrator, in such form as the Administrator determines to be appropriate; and

(B) A designated official of a local government having jurisdiction over land adjoining the coastal recreation waters for which the failure to meet applicable standards is identified;

(6) Measures for the posting of signs at beaches or similar points of access, or functionally equivalent communication measures that are sufficient to give notice to the public that the coastal recreation waters are not meeting or are not expected to meet applicable water quality standards for pathogens and pathogen indicators; and

(7) Measures that inform the public of the potential risks associated with water contact activities in the coastal recreation waters that do not meet applicable water quality standards.

Third, as required by CWA section 406(b)(3)(A) and the *National Beach Guidance and Required Performance Criteria for Grants,* recipients of a CWA section 406 grant must submit to EPA, in such format and at such intervals as EPA determines to be appropriate, a report that describes:

(1) Data collected as part of the program for monitoring and notification as described in section 406(c), and

(2) Actions taken to notify the public when water quality standards are exceeded. Grant recipients must submit to EPA both the monitoring and notification reports for any beach season by January 31 of the year following the beach season. For the 2010 beach season, the deadline for States to submit complete and correct reports is January 31, 2011. EPA first established this report submission deadline in the **Federal Register** notice for the fiscal year 2003 grants (68 FR 15446, 15449 (March 31, 2003)).

Fourth, grant recipients must report to EPA, latitude, longitude and mileage data on:

(1) The extent of beaches and similar points of public access adjacent to coastal recreation waters, and

(2) The extent of those beaches that are monitored.

EPA first established this requirement in the **Federal Register** notice for the fiscal year 2003 grants (68 FR 15446, 15447 (March 31, 2003)). EPA is continuing this requirement in order to capture any changes States, Tribes or local governments may make to their beach monitoring and notification programs. States, Tribes or local governments must report to EPA any changes to either the extent of their beaches or similar points of access, or to the extent of their beaches that are monitored.

How Much Funding Is Available?

For fiscal year 2010, the total available for BEACH Act grants is expected to be $9,900,000. EPA expects to award all but $100,000 to eligible States for implementation grants. EPA intends to award the remaining $100,000 to eligible Tribes. If EPA does not award any grants to eligible Tribes, EPA will redistribute the money to eligible States using the base allocation formula described below.

How Will the Funding for States Be Allocated?

For fiscal year 2010, EPA expects to award grants to all eligible States who apply for funding based on a new grant allocation formula that combines the formula that the Agency originally developed in 2002 ("base allocation formula") with a new allocation formula (the "supplemental allocation formula"). In an August 13, 2008, **Federal Register** notice, EPA announced that it was considering this change to the allocation formula and that the Agency expected that the change would be effective with the award of the 2010 BEACH Act grants (73 FR 47154). Because EPA developed the supplemental formula with substantial input from more than 25 States over a 12-month period and received very few comments on that notice, the Agency decided not to reconvene the workgroup that discussed changes to the formula. Instead, EPA notified all the States receiving implementation grants of the Agency's intention to proceed with the formula as described in the August 13, 2008, notice, with one change. The agency reviewed State spending from 2001 to 2006, not to 2007 as incorrectly described in the 2008 notice. This gives States and territories a three-year cushion to account for differences in the way they fund their beach-related activities consistent with the intention stated in the notice. The base allocation formula is used for the first $10 million of BEACH Act grants and uses three factors: (1) Beach season length, (2) shoreline miles, and (3) coastal county population. The supplemental allocation formula uses two factors: (1) Beach miles and (2) beach use.

What Is the Base Allocation Formula?

The base allocation formula sums three parts. The first part varies with the length of the beach season. This amount is scaled in $50,000 increments from $150,000 for States with the shortest beach seasons to $300,000 for those with the longest beach seasons. States and territories with long seasons are allotted two times the base amount of grant funds as those with short beach seasons (Table 1). The second part of the formula allocates half of the total remaining funds (*i.e.,* what is left after subtracting the total base amount) on the basis of the ratio of shoreline miles in a State or territory to the total length of shoreline miles across the entire United States. For example, if a State has 4 percent of the total coastal and Great Lakes shoreline, that State would receive 4 percent of 50 percent (or 2 percent of 100 percent) of total funds remaining after the Agency allotted the base amount (*i.e.,* part one of the formula) to all States and territories. The third part of the formula allocates the remaining funds on the basis of the ratio of coastal population in a State or territory to the total coastal population. For example, if a State has 2 percent of the total coastal and Great Lakes

population, that State would receive 2 percent of 50 percent (or 1 percent of 100 percent) of the total funds remaining after the Agency allotted the funds for the first two parts. The following table summarizes the base allocation formula:

TABLE 1—BEACH ACT GRANT BASE ALLOCATION FACTORS

For the factor—	The part of the allocation is—
Beach season length	< 3 months: $150,000 (States and territories with a season < 3 months receive season-based funding only.) 3–4 months: $200,000. 5–6 months: $250,000. > 6 months: $300,000.
Shoreline miles	50% of funds remaining after allocation of season-based funding.
Coastal population	50% of funds remaining after allocation of season-based funding.

How Have the Base Allocation Factors Changed Since the FY 2009 BEACH Act Grants Availability Notice?

In 2009 and earlier years EPA used shoreline miles and coastal county population as surrogates for beach miles and beach use, respectively, in the BEACH Act grant allocation formula. Based on discussions with States through the allocation formula workgroup, beginning with the award of fiscal 2010 grants, the Agency is using shoreline miles and coastal county population as factors in the base allocation formula and not surrogates for beach mileage and beach use. Both factors provide a stable foundation for States in determining the resources available through BEACH Act grant funding for their beach monitoring and public notification programs. EPA is making beach miles and beach use factors in the supplemental allocation formula.

How Are the Factors in the Base Allocation Formula Quantified?

1. Beach Season Length

EPA selected beach season length as a factor because it represents the amount of time in a year when a government would conduct its monitoring and notification program. The longer the beach season, the more resources a government would need to conduct monitoring and notification. The Agency obtained the information on the length of a beach season from information collected through the *National Health Protection Survey of Beaches* (EPA 823–F–00–0003, December 2000) for the States or territories that submitted a completed survey. However, because Alaska was not included in the survey, EPA estimated the beach season length for Alaska on the basis of air and water temperature, available information on recreation activities. EPA then grouped the States and territories into four categories of beach season lengths as shown in Table 2.

TABLE 2—DISTRIBUTION OF STATES BY BEACH SEASON CATEGORY

For beaches in—	The beach season category is—
Alaska	< 3 months.
Connecticut, Delaware, Illinois, Indiana, Maine, Maryland, Massachusetts, Michigan, Minnesota, New Hampshire, New Jersey, New York, Ohio, Oregon, Pennsylvania, Rhode Island, Virginia, Washington, Wisconsin.	3–4 months.
Alabama, Georgia, Louisiana, Mississippi, North Carolina, South Carolina	5–6 months.
American Samoa, California, Florida, Guam, Hawaii, Northern Mariana, Puerto Rico, Texas, U.S. Virgin Islands.	9–12 months.

2. Shoreline Miles

Shoreline miles data represent a reasonable estimate of the geographic extent over which a government would be expected to conduct monitoring. EPA used the National Oceanic and Atmospheric Administration (NOAA) publication, *The Coastline of the United States* (NOAA/PA 71046), to quantify shoreline miles.

3. Coastal County Population

EPA presently uses the coastal population of counties (from the 2000 Census data) to quantify the coastal population that is wholly or partially within the State's or territory's legally-defined coastal zone. EPA intends to use data from the 2010 census when it becomes available.

What Is the Supplemental Allocation Formula?

The supplemental allocation formula is a formula for allocating funds beyond those allocated using the base allocation formula. The supplemental allocation formula will be used only for two purposes: (1) To allocate BEACH Act grant funds (beyond the first $10 million) when the amount of funds appropriated for BEACH Act grants for a given fiscal year exceeds $10 million; and (2) to reallocate BEACH Act grant funds older than three years left unspent by States and territories. To determine the total amount of funds available for reallocation, EPA explained in the August 13, 2008, notice that it would evaluate State and territorial spending and reduce a State's or territory's 2010 grant award by an amount equal to the amount of unexpended funds more than three years old. With today's notice, EPA is implementing the approach the Agency outlined in the August 13, 2008, notice for 2010 and future years.

The supplemental allocation formula sums two parts: beach length and beach use. Each part is weighted equally. The first part of the formula allocates half of the available funds on the basis of the ratio of beach miles in a State or territory to the total length of beach miles across the entire United States. The second part of the formula allocates the other half of the available funds on the basis of the ratio of beach use in a State or territory to the total beach use across the entire United States. For 2010, EPA expects the amount available for the supplemental allocation formula to be $63,674. Table 3 summarizes the supplemental allocation formula:

TABLE 3—BEACH ACT GRANT SUPPLEMENTAL ALLOCATION FACTORS

For the factor—	The part of the allocation is—
Beach miles	50% of funds available for the supplemental allocation formula.
Beach use	50% of funds available for the supplemental allocation formula.

Why Is EPA Adding a Supplemental Formula?

Over the last three years, EPA reviewed the original BEACH Act grant allocation formula and recognized issues and some imbalance in the allocation of grant funds among States and territories. EPA sought input from the States by having them participate in a workgroup formed to review the allocation formula. EPA and the State workgroup subsequently identified and reviewed a range of options for improving the formula. The Agency outlined this process in the **Federal Register** notice published on August 13, 2008 (73 FR 47154).

EPA reviewed the data on the allocation and expenditure of grant funds and available options and concluded that some modest changes to how EPA allocates funds are appropriate. Based on its review, EPA has decided to make changes to the grant allocation formula using an incremental process, starting with modest changes to address outstanding needs. The first step in adjusting the grant formula uses two approaches: (1) Re-allocating older unused grant funds and (2) making changes to the formula elements that would be factored in for any appropriated funds for BEACH Act grants that exceed $10 million per fiscal year.

How Are the Factors in the Supplemental Allocation Formula Quantified?

1. Beach Miles

EPA selected miles of beach as a factor because it determines the geographical extent over which a government would conduct monitoring if it monitored all its beaches. The more miles of beaches, the more resources a government would need to conduct monitoring. EPA has completed quality assurance testing of its beach mileage data on all but six of the 37 BEACH Act States and Tribes. For those States and Tribes for which EPA does not have data assessed for quality, the Agency estimated the length of beach miles based on data submitted by the affected jurisdictions.

2. Beach Use

EPA selected beach use as a factor because it reflects the magnitude of potential human exposure to pathogens at recreational beaches. Greater use of beaches makes it more likely that a government would need to increase monitoring frequency due to the larger number of people potentially exposed to pathogens. EPA used the 2001 NOAA publication, *Current Recreation Patterns in Marine Recreation* (Leeworthy, V.R. and P.C. Wiley, 2001), to obtain data on beach use in marine States. For Great Lakes States and the territories EPA estimated beach use based on the ratio of beach use to coastal county population in marine States in similar latitudes. This approach was first used in *America's North Coast: A benefit-cost analysis of a program to protect and restore the Great Lakes,* published in 2007 by the Great Lakes Coalition. EPA continues to work with NOAA and the United States Forest Service to survey Great Lakes beach use for its next update of the report, *Current Recreation Patterns in Marine Recreation.* When those data are available, EPA will use that instead of its current estimates.

How Does EPA Expect To Allocate 2010 BEACH Act Grant Funds?

For 2010, the total available for BEACH Act grants is expected to be $9,900,000. Two Tribes, the Grand Portage Band of Chippewa (Minnesota) and the Makah Indian Nation, are expected to receive grants of $50,000 each, leaving $9,800,000 for grants to States and territories, $63,674 of which will be allocated using the supplemental allocation formula. Assuming all 35 States with coastal recreation waters apply and meet the statutory eligibility requirements for implementation grants (and have met the statutory grant conditions applicable to previously awarded section 406 grants), the distribution of the funds for year 2010 is expected to be:

For the State or territory of:	The year 2010 allocation is expected to be:	Portion of the total that is the supplemental allocation
Alabama	$264,000	$1,733
Alaska	86,000	0
American Samoa	303,000	1,297
California	520,000	3,035
Connecticut	225,000	1,302
Delaware	212,000	1,733
Florida	531,000	3,465
Georgia	288,000	2,163
Guam	304,000	1,297
Hawaii	326,000	2,599
Illinois	245,000	1,739
Indiana	207,000	866
Louisiana	323,000	866
Maine	256,000	1,733
Maryland	271,000	2,169
Massachusetts	257,000	2,599
Michigan	281,000	3,029
Minnesota	206,000	1,297
Mississippi	259,000	1,297
New Hampshire	206,000	1,302
New Jersey	280,000	2,169
New York	351,000	2,599

For the State or territory of:	The year 2010 allocation is expected to be:	Portion of the total that is the supplemental allocation
North Carolina	305,000	2,599
Northern Marianas	304,000	866
Ohio	225,000	1,302
Oregon	230,000	1,727
Pennsylvania	224,000	1,302
Puerto Rico	330,000	1,739
Rhode Island	215,000	2,163
South Carolina	299,000	2,599
Texas	386,000	2,599
U.S. Virgin Islands	304,000	866
Virginia	278,000	1,733
Washington	272,000	2,157
Wisconsin	227,000	1,733

What if a State Does Not Apply or Does Not Qualify for Funding?

EPA expects that all 35 States and territories will apply for a grant. If fewer than 35 States apply for the allocated amount, or if any applicant fails to meet the statutory eligibility requirements (or the statutory conditions applicable to previously awarded section 406 grants), then EPA will distribute available grant funds to eligible States in the following order:

(1) States that meet the eligibility requirements for implementation grants and that have met the statutory conditions applicable to previously awarded section 406 grants will be awarded the full amount of funds allocated to the State under the formula described above.

(2) EPA may award program implementation grants to local governments in States that the Agency determines have not met the requirements for implementation grants.

(3) Consistent with CWA section 406(h), EPA will use grant funds to conduct a beach monitoring and notification program in the case of a State that has no program for monitoring and notification that is consistent with EPA's grant performance criteria.

What if a State or Tribe Cannot Use All of Its Allocation?

If a State or Tribe cannot use all of its allocation, the Regional Administrator may award the unused funds to any eligible coastal or Great Lake grant recipient in the Region for the continued development or implementation of its coastal recreation water monitoring and notification program. If, after re-allocation, there are still unused funds within the Region, EPA Headquarters will redistribute these funds to any eligible coastal or Great Lake BEACH Act grant recipient according to the supplemental formula described above.

How Will the Funding for Tribes Be Allocated?

EPA expects to apportion the funds set aside for Tribal grants evenly among all eligible Tribes that apply for funding.

What Is the Expected Duration of Funding and Projects?

The expected funding and project periods for implementation grants awarded in fiscal year 2010 is one year.

Does EPA Require Matching Funds?

Recipients do not have to provide matching funds for BEACH Act grants. EPA may establish a match requirement in the future based on a review of State program activity and funding levels.

III. Eligible Activities

Recipients of implementation grants may use funds for activities to support implementing a beach monitoring and notification program that is consistent with the required performance criteria for grants specified in the document, *National Beach Guidance and Required Performance Criteria for Grants* (EPA–823–B–02–004). Recipients of development grants may use the funds to develop a beach monitoring and notification program consistent with the performance criteria.

IV. Selection Process

EPA Regional Offices will award CWA section 406 grants through a non-competitive process. EPA expects to award grants to all eligible State, Tribal, and territorial applicants that meet the applicable requirements described in this notice.

Who Has the Authority To Award BEACH Act Grants?

The Administrator has delegated the authority to award BEACH Act grants to the Regional Administrators.

V. Application Procedure

What Is the Catalog of Federal Domestic Assistance (CFDA) Number for the BEACH Monitoring and Notification Program Implementation Grants?

The number assigned to the BEACH Act grants is 66.472, Program Code CU.

Can BEACH Act Grant Funds Be Included in a Performance Partnership Grant?

For fiscal year 2010, BEACH Act grants cannot be included in a Performance Partnership Grant.

What Is the Application Process?

Your application package should contain completed:

- EPA SF–424 Application for Federal Assistance, and
- Program Summary.

In order for EPA to determine that a State or local government is eligible for an implementation grant, the applicant must submit documentation with its application to demonstrate that its program is consistent with the performance criteria. The Program Summary must contain sufficient technical detail for EPA to confirm that a program meets the statutory eligibility requirements and statutory grant conditions for previously awarded CWA section 406 grants listed in Section II (Funding and Eligibility) of this notice. The Program Summary must also describe how the State or local government used BEACH Act grant funds to develop and implement the beach monitoring and notification program, and how the program is consistent with the nine performance criteria in *National Beach Guidance and Required Performance Criteria for Grants* (EPA–823–B–02–004) which is found at *http://www.epa.gov/waterscience/beaches/grants/guidance/index.html*. The Program Summary should also describe the State or local program's objectives for the grant year.

States, Erie County, and Tribes that have previously been awarded BEACH Act grants must submit application packages to the appropriate EPA Regional Office by March 12, 2010. EPA will make an award after the Agency reviews the documentation and confirms that the program meets the applicable requirements. The Office of Management and Budget has authorized EPA to collect this information (BEACH Act Grant Information Collection Request, OMB control number 2040–0244). Please contact the appropriate EPA Regional Office for a complete application package. See Section VI for a list of EPA Regional Grant Coordinators or visit the EPA Beaches Web site at *http://www.epa.gov/waterscience/beaches/contact.html* on the Internet.

What Should a Tribe's Notice of Interest Contain?

The Notice of Interest should include the Tribe's name and the name and telephone number of a contact person.

Are Quality Assurance and Quality Control (QA/QC) Required for Application?

Yes. Three specific QA/QC requirements must be met to comply with EPA's performance criteria for grants:

(1) Applicants must submit documentation that describes the quality system implemented by the State, territory, Tribe, or local government. Documentation may be in the form of a Quality Management Plan or equivalent documentation.

(2) Applicants must submit a quality assurance project plan (QAPP) or equivalent documentation.

(3) Applicants are responsible for submitting documentation of the quality system and QAPP for review and approval by the EPA Quality Assurance Officer or his designee before they take primary or secondary environmental measurements. More information about the required QA/QC procedures is available in Chapter Four and Appendix H of *National Beach Guidance and Required Performance Criteria for Grants* (EPA–823–B–02–004).

Are There Reporting Requirements?

Recipients must submit annual performance reports and financial reports as required in 40 CFR 31.40 and 31.41. The annual performance report explains changes to the beach monitoring and notification program during the grant year. It also describes how the grant funds were used to implement the program to meet the performance criteria listed in *National Beach Guidance and Required Performance Criteria for Grants* (EPA–823–B–02–004). The annual performance report required under 40 CFR 31.40 is due no later than 90 days after the grant year ends. Recipients must also submit annual monitoring and notification reports required by the *National Beach Guidance and Required Performance Criteria for Grants* (EPA–823–B–02–004). Sections 2.2.3 and 4.3 of the document contain the performance criterion requiring an annual monitoring report, and sections 2.2.8 and 5.4 contain the performance criterion requiring an annual notification report. This document can be found at *http://www.epa.gov/waterscience/beaches/grants/*. These reports, required to be submitted to EPA under CWA section 406(b)(3)(A) and the *National Beach Guidance and Required Performance Criteria for Grants,* include data collected as part of a monitoring and notification program. As a condition of award of an implementation grant, EPA requires that the monitoring report and the notification report for any beach season be submitted not later than January 31 of the year following the beach season. (*See* Section II, Funding and Eligibility, above.)

What Regulations and OMB Cost Circular Apply to the Award and Administration of These Grants?

The regulations at 40 CFR Part 31 govern the award and administration of grants to States, Tribes, local governments, and territories under CWA section 406(b). Allowable costs will be determined according to the cost principles outlined in 2 CFR Part 225.

VI. Grant Coordinators

Headquarters—Washington, DC

Rich Healy, USEPA, 1200 Pennsylvania Ave., NW.—4305, Washington DC 20460; T: 202–566–0405; F: 202–566–0409; *healy.richard@epa.gov*.

Region 1—Connecticut, Maine, Massachusetts, New Hampshire, Rhode Island

Matt Liebman, USEPA Region 1, One Congress St. Suite 1100—COP, Boston, MA 02114–2023; T: 617–918–1626; F: 617–918–1505; *liebman.matt@epa.gov*.

Region 2—New Jersey, New York, Puerto Rico, U.S. Virgin Islands

Helen Grebe, USEPA Region 2, 2890 Woodbridge Ave. MS220, Edison, NJ 08837–3679; T: 732–321–6797; F: 732–321–6616; *grebe.helen@epa.gov*.

Region 3—Delaware, Maryland, Pennsylvania, Virginia

Denise Hakowski, USEPA Region 3, 1650 Arch Street 3WP30, Philadelphia, PA 19103–2029; T: 215–814–5726; F: 215–814–2318; *hakowski.denise@epa.gov*.

Region 4—Alabama, Florida, Georgia, Mississippi, North Carolina, South Carolina

Joel Hansel, USEPA Region 4, 61 Forsyth St. 15th Floor, Atlanta, GA 30303–3415; T: 404–562–9274; F: 404–562–9224; *hansel.joel@epa.gov*.

Region 5—Illinois, Indiana, Michigan, Minnesota, Ohio, Wisconsin

Holly Wirick, USEPA Region 5, 77 West Jackson Blvd. WT–16J, Chicago, IL 60604–3507; T: 312–353–6704; F: 312–886–0168; *wirick.holiday@epa.gov*.

Region 6—Louisiana, Texas

Mike Schaub, USEPA Region 6, 1445 Ross Ave. 6WQ–EW, Dallas, TX 75202–2733; T: 214–665–7314; F: 214–665–6689; *schaub.mike@epa.gov*.

Region 9—American Samoa, Commonwealth of the Northern Mariana Islands, California, Guam, Hawaii

Terry Fleming, USEPA Region 9, 75 Hawthorne St. WTR–2, San Francisco, CA 94105; T: 415–972–3462; F: 415–947–3537; *fleming.terrence@epa.gov*.

Region 10—Alaska, Oregon, Washington

Rob Pedersen, USEPA Region 10, 120 Sixth Ave. OW–134, Seattle, WA 98101; T: 206–553–1646; F: 206–553–0165; *pedersen.rob@epa.gov*.

Dated: January 4, 2010.

Peter S. Silva,

Assistant Administrator for Water.

[FR Doc. 2010–260 Filed 1–8–10; 8:45 am]

BILLING CODE 6650–50–P

ENVIRONMENTAL PROTECTION AGENCY

[FRL–9101–7]

Clean Air Act Advisory Committee (CAAAC): Notice of Meeting

AGENCY: Environmental Protection Agency.

ACTION: Notice of meeting.

SUMMARY: The Environmental Protection Agency (EPA) established the Clean Air Act Advisory Committee (CAAAC) on November 19, 1990, to provide independent advice and counsel to EPA on policy issues associated with

implementation of the Clean Air Act of 1990. The Committee advises on economic, environmental, technical scientific, and enforcement policy issues.

DATES AND ADDRESSES: Open meeting notice; Pursuant to 5 U.S.C. App. 2 Section 10(a)(2), notice is hereby given that the Clean Air Act Advisory Committee will hold their next open meeting on Wednesday February 3, 2010 from 8 a.m. to 4 p.m. at the Double Tree at National Airport, located at 300 Army Navy Drive, Arlington, Virginia. Seating will be available on a first come, first served basis. The Economic Incentives and Regulatory Innovations subcommittee will meet on Tuesday February 2, 2010 from 9:30 a.m. to 12 p.m. The Permits, New Source Reviews and Toxics subcommittee will meet on Tuesday February 2, 2010 from approximately 12:45 p.m. to 5 p.m. The meetings will also be held at the Double Tree at National Airport, located at 300 Army Navy Drive, Arlington, Virginia. The Mobile Sources Technical Review Subcommittee (MSTRS) will not be meeting in February. The agenda for the CAAAC full committee meeting on February 3, 2010 will be posted on the Clean Air Act Advisory Committee Web site at *http://www.epa.gov/oar/caaac/.*

Inspection of Committee Documents: The Committee agenda and any documents prepared for the meeting will be publicly available at the meeting. Thereafter, these documents, together with CAAAC meeting minutes, will be available by contacting the Office of Air and Radiation Docket and requesting information under docket OAR–2004–0075. The Docket office can be reached by e-mail at: *a-and-r-Docket@epa.gov* or FAX: 202–566–9744.

FOR FURTHER INFORMATION CONTACT: Concerning the CAAAC, please contact Pat Childers, Office of Air and Radiation, U.S. EPA (202) 564–1082, FAX (202) 564–1352 or by mail at U.S. EPA, Office of Air and Radiation (Mail code 6102 A), 1200 Pennsylvania Avenue, NW., Washington, DC 20004. For information on the Subcommittees, please contact the following individuals: (1) Permits/NSR/Toxics—Liz Naess, (919) 541–1892; (2) Economic Incentives and Regulatory Innovations—Carey Fitzmaurice, (202) 564–1667 and; (3) Mobile Source Technical Review—John Guy, (202) 343–9276. Additional Information on these meetings, CAAAC, and its Subcommittees can be found on the CAAAC Web site: *http://www.epa.gov/oar/caaac/.*

For information on access or services for individuals with disabilities, please contact Mr. Pat Childers at (202) 564–1082 or *childers.pat@epa.gov.* To request accommodation of a disability, please contact Mr. Childers, preferably at least 10 days prior to the meeting, to give EPA as much time as possible to process your request.

Dated: January 5, 2010.

Pat Childers,

Designated Federal Official, Clean Air Act Advisory Committee, Office of Air and Radiation.

[FR Doc. 2010–259 Filed 1–8–10; 8:45 am]

BILLING CODE 6560–50–P

ENVIRONMENTAL PROTECTION AGENCY

[FRL–9101–9]

National Drinking Water Advisory Council's Climate Ready Water Utilities Working Group Meeting Announcement

AGENCY: Environmental Protection Agency.

ACTION: Notice.

SUMMARY: The Environmental Protection Agency (EPA or Agency) is announcing the second in-person meeting of the Climate Ready Water Utilities (CRWU) Working Group of the National Drinking Water Advisory Council (NDWAC). The purpose of this meeting is for the Working Group to discuss the attributes and enabling environment of climate ready water utilities and to identify climate-related tools, training, and products.

DATES: The second in-person CRWU Working Group meeting will take place on February 3, 2010, from 8:30 a.m. to 5:30 p.m., Pacific Standard Time (PST) and on February 4, 2010, from 9 a.m. to 3 p.m., PST.

ADDRESSES: The meeting will take place at the Springs Preserve, which is located at 333 S. Valley View Blvd. between U.S. 95 and Alta Drive in Las Vegas, Nevada.

FOR FURTHER INFORMATION CONTACT: Interested participants from the public should contact Lauren Wisniewski, Designated Federal Officer, U.S. Environmental Protection Agency, Office of Ground Water and Drinking Water, Water Security Division (Mail Code 4608T), 1200 Pennsylvania Avenue, NW., Washington, DC, 20460. Please contact Lauren Wisniewski at *wisniewski.lauren@epa.gov* or call 202–564–2918. For more information about the CRWU Working Group including meeting summaries and agendas, please visit EPA's contractor's Web site at: *http://client-ross.com/crwuwg/.*

SUPPLEMENTARY INFORMATION:

Public Participation: There will be an opportunity for public comment during the CRWU Working Group meeting. Oral statements will be limited to five minutes, and it is preferred that only one person present the statement on behalf of a group or organization. Any person who wishes to file a written statement can do so before or after the CRWU Working Group meeting. Written statements received prior to the meeting will be distributed to all members of the Working Group before any final discussion or vote is completed. Any statements received after the meeting will become part of the permanent meeting file and will be forwarded to the CRWU Working Group members for their information. For information on access or services for individuals with disabilities, please contact Lauren Wisniewski at 202–564–2918 or by e-mail at *wisniewski.lauren@epa.gov.* To request accommodation of a disability, please contact Lauren Wisniewski, preferably, at least 10 days prior to the meeting to give EPA as much time as possible to process your request.

Background: The Agency's National Water Program Strategy: Response to Climate Change (2008) identified the need to provide drinking water and wastewater utilities with easy-to-use resources to assess the risk associated with climate change and to identify potential adaptation strategies. The NDWAC, established under the Safe Drinking Water Act, as amended (42 U.S.C. 300f *et seq.*), provides practical and independent advice, consultation and recommendations to the Agency on the activities, functions and policies related to the implementation of the Safe Drinking Water Act. On May 28, 2009, the NDWAC voted on and approved the formation of the CRWU Working Group. EPA anticipates that the Working Group will have five face-to-face meetings between December 2009 and September 2010 in addition to conference calls and/or video conferencing on an as needed basis. After the Working Group completes its charge, it will make recommendations to the full NDWAC. The full NDWAC will, in turn, make appropriate recommendations to the EPA.

Working Group Charge: The charge for the CRWU Working Group is to evaluate the concept of "Climate Ready Water Utilities" and provide recommendations to the full NDWAC on the development of an effective program for drinking water and wastewater utilities, including recommendations to: (1) Define and develop a baseline understanding of how to use available information to develop climate change

adaptation and mitigation strategies, including ways to integrate this information into existing complementary programs such as the Effective Utility Management and Climate Ready Estuaries Program; (2) Identify climate change-related tools, training, and products that address short-term and long-term needs of water and wastewater utility managers, decision makers, and engineers, including ways to integrate these tools and training into existing programs; and (3) Incorporate mechanisms to provide recognition or incentives that facilitate broad adoption of climate change adaptation and mitigation strategies by the water sector into existing EPA Office of Water recognition and awards programs or new recognition programs.

Dated: January 6, 2010.

Cynthia C. Dougherty,

Director, Office of Ground Water and Drinking Water.

[FR Doc. 2010–264 Filed 1–8–10; 8:45 am]

BILLING CODE 6560–50–P

ENVIRONMENTAL PROTECTION AGENCY

[FRL–9101–8]

Science Advisory Board Staff Office; Notification of a Public Teleconference of the Clean Air Scientific Advisory Committee (CASAC) Ozone Review Panel for the Reconsideration of the 2008 NAAQS

AGENCY: Environmental Protection Agency (EPA).

ACTION: Notice.

SUMMARY: The Environmental Protection Agency (EPA) Science Advisory Board (SAB) Staff Office announces a public teleconference of the Clean Air Scientific Advisory Committee (CASAC) Ozone Review Panel for the Reconsideration of the 2008 National Ambient Air Quality Standards (NAAQS) to conduct a review of EPA's proposed rule that reconsiders the National Ambient Air Quality Standards (NAAQS) for Ozone set in March 2008.

DATES: The public teleconference will be held on Monday, January 25, 2010 from 10 a.m. to 1 p.m. (Eastern Time).

ADDRESSES: The public teleconference will be conducted by telephone only.

FOR FURTHER INFORMATION CONTACT: Any member of the public who wants further information concerning the teleconference may contact Dr. Holly Stallworth, Designated Federal Officer (DFO), EPA Science Advisory Board (1400F), U.S. Environmental Protection Agency, 1200 Pennsylvania Avenue, NW., Washington, DC 20460; via telephone/voice mail (202) 343–9867; fax (202) 233–0643; or e-mail at *stallworth.holly@epa.gov*. General information concerning the CASAC can be found on the EPA Web site at *http://www.epa.gov/casac*.

SUPPLEMENTARY INFORMATION:

Background: The Clean Air Scientific Advisory Committee (CASAC) was established under section 109(d)(2) of the Clean Air Act (CAA or Act) (42 U.S.C. 7409) as an independent scientific advisory committee. CASAC provides advice, information and recommendations on the scientific and technical aspects of air quality criteria and national ambient air quality standards (NAAQS) under sections 108 and 109 of the Act. The CASAC is a Federal Advisory Committee chartered under the Federal Advisory Committee Act (FACA), as amended, 5 U.S.C., App. The CASAC Panel on the Ozone NAAQS Reconsideration will comply with the provisions of FACA and all appropriate SAB Staff Office procedural policies.

Section 109(d)(1) of the CAA requires that the Agency periodically review and revise, as appropriate, the air quality criteria and the National Ambient Air Quality Standards (NAAQS) for the six "criteria" air pollutants, including ozone.

From 2005 to 2008, the CASAC Ozone Review Panel conducted scientific reviews of EPA's scientific assessments of the health and welfare effects of Ozone and other Photochemical Oxidants. This panel last met on March 28, 2008 to provide comments on EPA's Final Rule for the National Ambient Air Quality Standards (NAAQS) for ozone (73 FR 16436). CASAC advisory reports on this subject are available on the CASAC Web site at *http://yosemite.epa.gov/sab/sabproduct.nsf/WebProjectsbyTopicCASAC!OpenView* under completed topics, specifically Ozone 2005–2008.

On September 16, 2009, EPA Administrator Lisa Jackson announced her decision to reconsider the March 12, 2008 primary and secondary Ozone NAAQS to ensure they are scientifically sound and protective of public health and the environment. Pursuant to this decision, EPA has proposed on January 6, 2009 to set different primary and secondary standards than those set in 2008 to provide requisite protection of public health and welfare, respectively (*see http://www.epa.gov/ttn/naaqs/standards/ozone/s_o3_cr_fr.html*). Since the proposed standards are based on the scientific record from the 2008 rulemaking, including public comments and CASAC advice, EPA's Office of Air and Radiation requested the former Ozone Review Panel to provide comments and advice on the proposed Ozone standards. Accordingly, the SAB Staff Office is reconvening the former Ozone Review Panel to provide advice on the proposed Ozone NAAQS. This panel is renamed "Ozone Review Panel for the Reconsideration of the 2008 NAAQS." The roster for this panel can be viewed at *http://yosemite.epa.gov/sab/sabproduct.nsf/WebCASAC/CommitteesandMembership?OpenDocument*. The purpose of the January 25, 2010 teleconference is for this Panel for the Reconsideration of the 2008 NAAQS to review EPA's proposed rule.

Technical Contacts: Any questions concerning EPA's proposed rule for the NAAQS for Ozone should be directed to Ms. Susan Stone, Office of Air and Radiation (OAR) or by e-mail at (919) 541–1146 or *stone.susan@epa.gov*.

Availability of Meeting Materials: A meeting agenda and other materials for the meeting will be placed on the CASAC Web site on the page reserved for the January 25, 2010 teleconference, accessible through the calendar link on the blue navigation bar. The proposed rule is available at *http://www.epa.gov/ttn/naaqs/standards/ozone/s_o3_cr_fr.html.*

Procedures for Providing Public Input: Interested members of the public may submit relevant written or oral information on the group conducting the review and the topics included in this advisory activity. *Oral Statements:* To be placed on the public speaker list for the January 25, 2010 teleconference, interested parties should notify Dr. Holly Stallworth, DFO, by e-mail no later than January 20, 2010. Individuals making oral statements will be limited to three minutes per speaker. *Written Statements:* Written statements for the January 25, 2010 teleconference should be received in the SAB Staff Office by January 20, 2010 so that the information may be made available to the CASAC Panel for its consideration prior to this meeting. Written statements should be supplied to the DFO in the following formats: one hard copy with original signature and one electronic copy via e-mail (acceptable file format: Adobe Acrobat PDF, MS Word, WordPerfect, MS PowerPoint, or Rich Text files in IBM–PC/Windows 98/2000/XP format). Submitters are asked to provide versions of each document submitted with and without signatures, because the SAB Staff Office does not publish documents with signatures on its Web sites.

Accessibility: For information on access or services for individuals with

disabilities, please contact Dr. Stallworth at the phone number or e-mail address noted above, preferably at least ten days prior to the teleconference, to give EPA as much time as possible to process your request.

Dated: January 5, 2010.

Anthony F. Maciorowski,

Deputy Director, EPA Science Advisory Board Staff Office.

[FR Doc. 2010–261 Filed 1–8–10; 8:45 am]

BILLING CODE 6560–50–P

FEDERAL COMMUNICATIONS COMMISSION

Notice of Public Information Collection, Comments Requested

01/05/2010.

SUMMARY: The Federal Communications Commission, as part of its continuing effort to reduce paperwork burden invites the general public and other Federal agencies to take this opportunity to comment on the following information collection(s), as required by the Paperwork Reduction Act of 1995, 44 U.S.C. 3501–3520. An agency may not conduct or sponsor a collection of information unless it displays a currently valid control number. No person shall be subject to any penalty for failing to comply with a collection of information subject to the Paperwork Reduction Act (PRA) that does not display a valid control number. Comments are requested concerning (a) whether the proposed collection of information is necessary for the proper performance of the functions of the Commission, including whether the information shall have practical utility; (b) the accuracy of the Commission's burden estimate; (c) ways to enhance the quality, utility, and clarity of the information collected; (d) ways to minimize the burden of the collection of information on the respondents, including the use of automated collection techniques or other forms of information technology and (e) ways to further reduce the information burden for small business concerns with fewer than 25 employees.

The FCC may not conduct or sponsor a collection of information unless it displays a currently valid control number. No person shall be subject to any penalty for failing to comply with a collection of information subject to the Paperwork Reduction Act (PRA) that does not display a valid control number.

DATES: Persons wishing to comment on this information collection should submit comments by March 12, 2010. If you anticipate that you will be submitting comments, but find it difficult to do so within the period of time allowed by this notice, you should advise the contact listed below as soon as possible.

ADDRESSES: Direct all PRA comments to Nicholas A. Fraser, Office of Management and Budget (OMB), via fax at (202) 395–5167, or via the Internet at Nicholas_A._Fraser@omb.eop.gov and to Cathy Williams, Federal Communications Commission (FCC), 445 12th Street, SW, Washington, DC 20554. To submit your comments by e-mail send then to: PRA@fcc.gov and to Cathy.Williams@fcc.gov.

FOR FURTHER INFORMATION CONTACT: For additional information about the information collection send an e-mail to PRA@fcc.gov or contact Cathy Williams on (202) 418–2918.

SUPPLEMENTARY INFORMATION:

OMB Control Number: 3060–0849.

Title: Commercial Availability of Navigation Devices, CS Docket 97–80.

Form Number: Not applicable.

Type of Review: Extension of a currently approved collection.

Respondents: Business or other for–profit entities.

Number of Respondents and Responses: 958 respondents; 529,510 responses.

Estimated Time per Response: 0.00278 hours – 40 hours per response.

Frequency of Response: Recordkeeping and third party disclosure requirements; On occasion, quarterly, and semi–annual reporting requirements.

Obligation to Respond: Required to obtain or retain benefits. The statutory authority for this information collection is contained in Sections 4(i), 303(r) and 629 of the Communications Act of 1934, as amended.

Total Annual Burden: 44,173 hours.

Total Annual Cost: $137,550.

Privacy Act Impact Assessment: No impact(s).

Nature and Extent of Confidentiality: There is no need for confidentiality with this collection of information.

Needs and Uses: On March 17, 2005 the FCC released a Second Report, In the Matter of Implementation of Section 304 of the Telecommunications Act of 1996, Commercial Availability of Navigation Devices, CS Docket No. 97–80, FCC 05–76. In the Second Report and Order and Further Notice of Proposed Rulemaking, the Commission extended by twelve months the existing 2006 deadline in Section 76.1204(a)(1) prohibiting the deployment of integrated navigation devices by multichannel video programming distributors in order to promote the retail sale of non–integrated navigation devices. This extension was intended to afford cable operators additional time to investigate and develop a downloadable security solution that will allow common reliance by cable operators and consumer electronics manufacturers on an identical security function without the additional costs of physical separation inherent in the point–of–deployment module, or CableCARD, solution. The rules adopted in this proceeding added information collection requirements to this collection and also were intended to implement Section 629 of the Communications Act of 1934, as amended, 47 U.S.C. § 549.

Federal Communications Commission.

Marlene H. Dortch,

Secretary, Office of the Secretary, Office of Managing Director.

[FR Doc. 2010–230 Filed 1–8–10; 8:45 am]

BILLING CODE: 6712–01–S

FEDERAL COMMUNICATIONS COMMISSION

[WT Docket No. 08–165; DA 09–2629]

Wireless Telecommunications Bureau Seeks Comment on Petition for Reconsideration or Clarification of the Commission's Declaratory Ruling Clarifying Provisions in Section 332(c)(7) of the Communications Act

AGENCY: Federal Communications Commission.

ACTION: Notice.

SUMMARY: In this document, comment is sought on a December 17, 2009 petition for reconsideration or clarification (Petition) filed by the National Association of Telecommunications Officers and Advisors, the United States Conference of Mayors, the National League of Cities, the National Association of Counties, and the American Planning Association (Petitioner). The Petitioner asks the Federal Communications Commission (Commission) to reconsider or clarify its interpretation of provisions in Section 332(c)(7) of the Communications Act, as amended.

DATES: Interested parties may file oppositions on or before January 22, 2010, and replies on or before February 8, 2010.

ADDRESSES: You may submit comments, identified by WT Docket No. 08–165, by any of the following methods: (1) The Commission's Electronic Comment Filing System (ECFS), (2) the Federal Government's eRulemaking Portal, or (3) by filing paper copies. For detailed

instructions for submitting comments and additional information on the rulemaking process, *see* the **SUPPLEMENTARY INFORMATION** section of this document.

FOR FURTHER INFORMATION CONTACT: Michael Rowan, Spectrum & Competition Policy Division, Wireless Telecommunications Bureau, Federal Communications Commission, 445 12th Street, SW., Washington, DC 20554.

SUPPLEMENTARY INFORMATION: This is a summary of the Commission's public notice in WT Docket No. 08–165 released December 23, 2009. The complete text of the public notice is available for public inspection and copying from 8 a.m. to 4:30 p.m. Monday through Thursday or from 8 a.m. to 11:30 a.m. on Friday at the FCC Reference Information Center, Portals II, 445 12th Street, SW., Room CY–A257, Washington, DC 20554. The public notice may also be purchased from the Commission's duplicating contractor, Best Copy and Printing, Inc. (BCPI), Portals II, 445 12th Street, SW., Room CY–B402, Washington, DC 20554, telephone (800) 378–3160, facsimile (301) 816–0169, e-mail *FCC@BCPIWEB.com,* or you may contact BCPI at its Web site: *http://www.BCPIWEB.com.* When ordering documents from BCPI please provide the appropriate FCC document number, DA 09–2629. The public notice is also available on the Internet at the Commission's Web site through its Electronic Document Management System (EDOCS): *http://hraunfoss.fcc.gov/edocs_public/SilverStream/Pages/edocs.html.*

Synopsis

On December 17, 2009, the National Association of Telecommunications Officers and Advisors, the United States Conference of Mayors, the National League of Cities, the National Association of Counties, and the American Planning Association filed a petition[1] requesting that the Commission reconsider or clarify its decision[2] interpreting provisions in Section 332(c)(7) of the Communications Act, as amended.[3] Petitioners argue in their Petition that the Commission's adoption of a 30-day review period for local authorities to determine the completeness of a wireless facilities siting request exceeds its authority under its own interpretation, does not allow local authorities to toll the adopted time limits for other reasons, and will result in significant unintended consequences. The Petition also argues that the Commission did not provide affected parties the opportunity for input before adopting the 30-day review period.

Procedural Matters

All filings should reference the docket number of this proceeding, WT Docket No. 08–165.

This matter shall be treated as a "permit-but-disclose" proceeding in accordance with the Commission's *ex parte* rules.[4] Persons making oral *ex parte* presentations are reminded that memoranda summarizing the presentations must contain summaries of the substance of the presentations and not merely a listing of the subjects discussed. More than a one- or two-sentence description of the views and arguments presented generally is required.[5] Other rules pertaining to oral and written *ex parte* presentations in permit-but-disclose proceedings are set forth in § 1.1206(b) of the Commission's rules.[6]

Comments may be filed using (1) the Commission's ECFS, (2) the Federal Government's eRulemaking Portal, or (3) by filing paper copies.[7] Comments can be filed through the Commission's ECFS filing interface located at the following Internet address: *http://www.fcc.gov/cgb/ecfs/.* Comments can also be filed via the Federal eRulemaking Portal: *http://www.regulations.gov.*[8] In completing the transmittal screen, commenters should include their full name, U.S. Postal Service mailing address, and the applicable docket or rulemaking number. Parties who choose to file by paper must file an original and four copies of each filing. If more than one docket or rulemaking number appears in the caption of this proceeding, filers must submit two additional copies for each additional docket or rulemaking number.

Filings can be sent by hand or messenger delivery, by commercial overnight courier, or by first-class or overnight U.S. Postal Service mail. All filings must be addressed to the Commission's Secretary, Office of the Secretary, Federal Communications Commission.

- Effective December 28, 2009, all hand-delivered or messenger-delivered paper filings for the Commission's Secretary must be delivered to FCC Headquarters at 445 12th St., SW., Room TW–A325, Washington, DC 20554. All hand deliveries must be held together with rubber bands or fasteners. Any envelopes must be disposed of before entering the building. **Please Note**: Through December 24, 2009, the Commission's contractor will receive hand-delivered or messenger-delivered paper filings for the Commission's Secretary at 236 Massachusetts Avenue, NE., Suite 110, Washington, DC 20002. This filing location will be permanently closed after December 24, 2009. The filing hours at both locations are 8 a.m. to 7 p.m.
- Commercial overnight mail (other than U.S. Postal Service Express Mail and Priority Mail) must be sent to 9300 East Hampton Drive, Capitol Heights, MD 20743.
- U.S. Postal Service first-class, Express, and Priority mail must be addressed to 445 12th Street, SW., Washington, DC 20554.

Comments filed in response to this public notice will be available for public inspection and copying during business hours in the FCC Reference Information Center, Portals II, 445 12th Street, SW., Room CY–A257, Washington, DC 20554, and via the Commission's ECFS by entering the docket number, WT Docket No. 08–165. The comments may also be purchased from Best Copy and Printing, Inc., telephone (800) 378–3160, facsimile (301) 816–0169, e-mail *FCC@BCPIWEB.com.*

People with Disabilities: To request materials in accessible formats for people with disabilities (Braille, large print, electronic files, audio format), send an e-mail to *fcc504@fcc.gov* or call the Consumer and Governmental Affairs Bureau at (202) 418–0530, (202) 418–0432 (TTY).

Federal Communications Commission.

Jane Jackson,

Associate Bureau Chief, Wireless Telecommunications Bureau.

[FR Doc. 2010–55 Filed 1–8–10; 8:45 am]

BILLING CODE 6712–01–P

[1] In the Matter of Petition for Declaratory Ruling to Clarify Provisions of Section 332(c)(7)(B) to Ensure Timely Siting Review and to Preempt under Section 253 State and Local Ordinances that Classify All Wireless Siting Proposals as Requiring a Variance, Petition for Reconsideration or Clarification, WT Docket No. 08–165, filed Dec. 17, 2009 (Petition).

[2] In the Matter of Petition for Declaratory Ruling to Clarify Provisions of Section 332(c)(7)(B) to Ensure Timely Siting Review and to Preempt under Section 253 State and Local Ordinances that Classify All Wireless Siting Proposals as Requiring a Variance, Declaratory Ruling, WT Docket No. 08–165, FCC 09–99 (Nov. 18, 2009).

[3] 47 U.S.C. 332(c)(7).

[4] *See* 47 CFR 1.1200, 1.1206.

[5] *See* 47 CFR 1.1206(b).

[6] 47 CFR 1.1206(b).

[7] *See* Electronic Filing of Documents in Rulemaking Proceedings, 63 FR 24121 (1998).

[8] Filers should follow the instructions provided on the Federal eRulemaking Portal Web site for submitting comments.

FEDERAL RESERVE SYSTEM

Formations of, Acquisitions by, and Mergers of Bank Holding Companies

The companies listed in this notice have applied to the Board for approval, pursuant to the Bank Holding Company Act of 1956 (12 U.S.C. 1841 *et seq.*) (BHC Act), Regulation Y (12 CFR Part 225), and all other applicable statutes and regulations to become a bank holding company and/or to acquire the assets or the ownership of, control of, or the power to vote shares of a bank or bank holding company and all of the banks and nonbanking companies owned by the bank holding company, including the companies listed below.

The applications listed below, as well as other related filings required by the Board, are available for immediate inspection at the Federal Reserve Bank indicated. The applications also will be available for inspection at the offices of the Board of Governors. Interested persons may express their views in writing on the standards enumerated in the BHC Act (12 U.S.C. 1842(c)). If the proposal also involves the acquisition of a nonbanking company, the review also includes whether the acquisition of the nonbanking company complies with the standards in section 4 of the BHC Act (12 U.S.C. 1843). Unless otherwise noted, nonbanking activities will be conducted throughout the United States. Additional information on all bank holding companies may be obtained from the National Information Center website at *www.ffiec.gov/nic/*.

Unless otherwise noted, comments regarding each of these applications must be received at the Reserve Bank indicated or the offices of the Board of Governors not later than February 5, 2010.

A. Federal Reserve Bank of Chicago (Colette A. Fried, Assistant Vice President) 230 South LaSalle Street, Chicago, Illinois 60690–1414:

1. United Community Bancorp, Inc., Chatham, Illinois; to acquire 100 percent of the voting shares of Marine Bank & Trust, Carthage, Illinois, and Brown County State Bank, Mount Sterling, Illinois. Comments regarding this application must be received not later than January 26, 2010.

B. Federal Reserve Bank of Kansas City (Todd Offenbacker, Assistant Vice President) 1 Memorial Drive, Kansas City, Missouri 64198–0001:

1. First National Management Group, LLC, Greenwood Village, Colorado; to become a bank holding company by acquiring at least 93 percent of the voting shares of Amoret Bancshares, Inc., and thereby indirectly acquire voting shares of BC National Banks, both in Butler, Missouri.

Board of Governors of the Federal Reserve System, January 6, 2010.

Robert deV. Frierson,

Deputy Secretary of the Board.

[FR Doc. 2010–219 Filed 1–8–10; 8:45 am]

BILLING CODE 6210–01–S

FEDERAL RESERVE SYSTEM

Notice of Proposals to Engage in Permissible Nonbanking Activities or to Acquire Companies that are Engaged in Permissible Nonbanking Activities

The companies listed in this notice have given notice under section 4 of the Bank Holding Company Act (12 U.S.C. 1843) (BHC Act) and Regulation Y (12 CFR Part 225) to engage *de novo*, or to acquire or control voting securities or assets of a company, including the companies listed below, that engages either directly or through a subsidiary or other company, in a nonbanking activity that is listed in § 225.28 of Regulation Y (12 CFR 225.28) or that the Board has determined by Order to be closely related to banking and permissible for bank holding companies. Unless otherwise noted, these activities will be conducted throughout the United States.

Each notice is available for inspection at the Federal Reserve Bank indicated. The notice also will be available for inspection at the offices of the Board of Governors. Interested persons may express their views in writing on the question whether the proposal complies with the standards of section 4 of the BHC Act. Additional information on all bank holding companies may be obtained from the National Information Center website at *www.ffiec.gov/nic/*.

Unless otherwise noted, comments regarding the applications must be received at the Reserve Bank indicated or the offices of the Board of Governors not later than January 26, 2010.

A. Federal Reserve Bank of San Francisco (Kenneth Binning, Vice President, Applications and Enforcement) 101 Market Street, San Francisco, California 94105–1579:

1. Zions Bancorporation, Salt Lake City, Utah; to acquire indirectly through NetDeposit, LLC, Salt Lake City, Utah, all of the assets of Creative Cash Flow Solutions, Ltd., Lindenhurst, New York, and thereby engage data processing services under section 225.28(b)(14) of Regulation Y.

Board of Governors of the Federal Reserve System, January 6, 2010.

Robert deV. Frierson,

Deputy Secretary of the Board.

[FR Doc. 2010–221 Filed 1–8–10; 8:45 am]

BILLING CODE 6210–01–S

DEPARTMENT OF HEALTH AND HUMAN SERVICES

Indian Health Service

Indian Health Professions Preparatory, Indian Health Professions Pregraduate and Indian Health Professions Scholarship Programs

Announcement Type: Initial.

CFDA Numbers: 93.971, 93.123, and 93.972.

Key Dates:

Application Deadline: February 28, 2010, for Continuing students.

Application Deadline: March 28, 2010, for New students.

Application Review: May 17–21, 2010.

Application Notification: First week of July, 2010.

Award Start Date: August 1, 2010.

I. Funding Opportunity Description

The Indian Health Service (IHS) is committed to encouraging American Indians and Alaska Natives to enter the health professions and to assuring the availability of Indian health professionals to service Indians. The IHS is committed to the recruitment of students for the following programs:

- *The Indian Health Professions Preparatory Scholarship* authorized by section 103 of the Indian Health Care Improvement Act (IHCIA), as amended.
- *The Indian Health Professions Pregraduate Scholarship* authorized by section 103 of the IHCIA, as amended.
- *The Indian Health Professions Scholarship* authorized by section 104 of the IHCIA, as amended.

Full-time and part-time scholarships will be funded for each of the three scholarship programs.

II. Award Information

Awards under this initiative will be administered using the grant mechanism of the IHS.

Estimated Funds Available: An estimated $14.0 million will be available for FY 2010 awards. The IHS program anticipates, but cannot guarantee, due to possible funding changes, student scholarship selections from any or all of the following disciplines in the 103, 103P and 104 Programs for the Scholarship Period 2010–2011. Anticipated Number of Awards: Approximately 70 awards will

be made under the Health Professions Preparatory and Pregraduate Scholarship Programs for Indians. The awards are for ten months in duration and the average award to a full-time student is approximately $30,328. An estimated 250 awards will be made under the Indian Health Professions Scholarship Program. The awards are for 12 months in duration and the average award to a full-time student is approximately $47,200. In FY 2010, an estimated $9,000,000 is available for continuation awards, and an estimated $5,000,000 is available for new awards.

Project Period—The project period for the Health Professions Preparatory Scholarship support is limited to two years for full-time students and the part-time equivalent of two years, not to exceed four years for part-time students. The project period for the Health Professions Pregraduate Scholarship support is limited to four years for full-time students and the part-time equivalent of four years, not to exceed eight years for part-time students. The Indian Health Professions Scholarship support is limited to four years for full-time students and the part-time equivalent of four years, not to exceed eight years for part-time students.

III. Eligibility Information

This announcement is a limited competition for awards made to American Indians (Federally recognized Tribal members, state recognized Tribal members, and first and second degree descendants of Federal or state recognized Tribal members), or Alaska Natives only. *Continuation awards are non-competitive.*

1. Eligible Applicants

The Health Professions Preparatory Scholarship awards are made to American Indians (Federally recognized Tribal members, first and second degree descendants of Tribal members, and state recognized Tribal members, first and second degree descendants of Tribal members), or Alaska Natives who:

- Have successfully completed high school education or high school equivalency;
- Have been accepted for enrollment in a compensatory, pre-professional general education course or curriculum; and

The Health Pregraduate Scholarship awards are made to American Indians (Federally recognized Tribal members, first and second degree descendants of Tribal members, and state recognized Tribal members, first and second degree descendants of Tribal members), or Alaska Natives who:

- Have successfully completed high school education or high school equivalency; and
- Have been accepted for enrollment or are enrolled in an accredited pregraduate program leading to a baccalaureate degree in pre-medicine, pre-dentistry, pre-podiatry or pre-optometry.

The Indian Health Professions Scholarship may be awarded only to an individual who is a member of a Federally recognized Indian Tribe or Alaska Native as provided by section 4(c), and 4(d) of the IHCIA. Membership in a Tribe recognized only by a state does not meet this statutory requirement. To receive an Indian Health Professions Scholarship, an otherwise eligible individual must be enrolled in an appropriately accredited school and pursuing a course of study in a health profession as defined by section 4(n) of the IHCIA.

2. Cost Sharing/Matching

The Scholarship Program does not require matching funds or cost sharing to participate in the competitive grant process.

3. Benefits From State, Local and Other Federal Sources

All other sources of outside scholarship/grant funding would be applied to the student's accounts at the college or university and universities before the Indian Health Service Scholarship Program would pay any of the remaining balance.

IV. Application Submission Information

1. Address To Request Application Package

New applicants are responsible for contacting and requesting an application packet from their IHS Area Scholarship Coordinator. They are listed on the IHS Web site at *http://www.scholarship.ihs.gov/area_coordinators.cfm*. This information is listed below. Please review the following list to identify the appropriate IHS Area Scholarship Coordinator for your State. Application packets may be obtained by calling or writing to the following individuals listed below:

IHS Area Office and Scholarship Coordinator

States/locality served	Address
Aberdeen Area IHS, Iowa, Nebraska, North Dakota, South Dakota	Ms. Kim Annis, IHS Area Scholarship Coordinator, Aberdeen Area IHS, 115 4th Avenue, SE, Aberdeen, SD 57401, *Tele:* (605) 226–7466.
Alaska Native Tribal Health Consortium, Alaska	Ms. Brianne Island, Alternate: Mr. Joe Mupkip, IHS Area Scholarship Coordinator, 4000 Ambassador Drive, Anchorage, AK 99508, *Tele:* (907) 729–1913, 1–800–684–8361 (toll free).
Albuquerque Area IHS, Colorado, New Mexico	Ms. Cora Boone, IHS Area Scholarship Coordinator, Albuquerque Area IHS, 5300 Homestead Road, NE, Albuquerque, NM 87110, *Tele:* (505) 248–4418, 1–800–382–3027 (toll free).
Bemidji Area IHS, Illinois, Indiana, Michigan, Minnesota, Wisconsin	Mr. Tony Buckanaga, IHS Area Scholarship Coordinator, Bemidji Area IHS, 522 Minnesota Avenue, NW, Room 209, Bemidji, MN 56601, *Tele:* (218) 444–0486, 1–800–892–3079 (toll free).
Billings Area IHS, Montana, Wyoming	Mr. Delon Rock Above, Alternate: Ms. Bernice Hugs, IHS Area Scholarship Coordinator, Billings Area IHS, Area Personnel Office, P.O. Box 36600, 2900 4th Avenue, North, Suite 400, Billings, MT 59103, *Tele:* (406) 247–7215.
California Area IHS, California, Hawaii	Ms. Mona Celli, IHS Area Scholarship Coordinator, California Area IHS, 650 Capitol Mall, Suite 7–100, Sacramento, CA 95814, *Tele:* (916) 930–3981, ext. 311.
Nashville Area IHS, Alabama, Arkansas, Connecticut, Delaware, Florida, Georgia, Kentucky, Louisiana, Maine, Maryland, Massachusetts, Mississippi, New Hampshire, New Jersey, New York, North Carolina, Ohio, Pennsylvania, Rhode Island, South Carolina, Tennessee, Vermont, Virginia, West Virginia, District of Columbia.	Ms. Gina Blackfox, Alternate: Ms. Lori Rowton, IHS Area Scholarship Coordinator, Nashville Area IHS, 711 Stewarts Ferry Pike, Nashville, TN 37214, *Tele:* (615) 467–1575.

IHS AREA OFFICE AND SCHOLARSHIP COORDINATOR—Continued

States/locality served	Address
Navajo Area IHS, Arizona, New Mexico, Utah	Ms. Roselinda Allison, Alternate: Ms. Aletha John, IHS Area Scholarship Coordinator, Navajo Area IHS, P.O. Box 9020, Window Rock, AZ 86515, *Tele:* (928) 871–1358 or 1360.
Oklahoma City Area IHS, Kansas, Missouri, Oklahoma	Ms. Larissa Walker, IHS Area Scholarship Coordinator, Oklahoma City Area IHS, 701 Market Drive, Oklahoma City, OK 73114, *Tele:* (405) 951–3970, 1–800–722–3357 (toll free).
Phoenix Area IHS, Arizona, Nevada, Utah	Ms. Bonnie Lang, IHS Area Scholarship Coordinator, Phoenix Area IHS, 1616 Indian School Road, #360E, Phoenix, AZ 85016, *Tele:* (602) 248–1480 ext. 4127.
Portland Area IHS, Idaho, Idaho, Oregon, Washington	Ms. Laurie Veitenheimer, Alternate: Mr. Don Hornback, IHS Area Scholarship Coordinator, Portland Area IHS, 1220 S.W. Third Avenue, Room 440, Portland, OR 97204–2892, *Tele:* (503) 326–6983 or 2021.
Tucson Area IHS, Arizona, Texas	Ms. Bonnie Lang, (*See* Phoenix Area).

1. Content and Form Submission

Each applicant will be responsible for submitting a completed application (Forms IHS–856–1 through 856–8) and one copy to their IHS Area Scholarship Coordinator. Electronic applications are being accepted for this cycle. Go to *www.scholarship.ihs.gov* for more information on how to apply electronically. The application will be considered complete if the following documents (original and one copy) are included;

- Completed and signed application Checklist.
- Original signed complete application form IHS–856 (for continuation students-Data Sheet in place of IHS–856).
- Current Letter of Acceptance from College/Proof of application to Health Professions Program.
- Official transcripts for all colleges (or high school transcripts for applicants who have not taken college courses).
- Cumulative GPA: Applicant's calculations.
- Applicant's Documents for Indian Eligibility.

A. If you are a member of a Federally recognized Tribe or Alaska Native (recognized by the Secretary of the Interior), provide evidence of membership such as:

(1) Certification of Tribal enrollment by the Secretary of the Interior, acting through the Bureau of Indian Affairs (BIA Certification: Form 4432–Category A or D, whichever is applicable); or

(2) In the absence of BIA certification, documentation that you meet requirements of Tribal membership as prescribed by the charter, articles of incorporation or other legal instrument of the Tribe and have been officially designated as a Tribal member as evidenced by an accompanying document signed by an authorized Tribal official, or

(3) Other evidence of Tribal membership satisfactory to the Secretary of the Interior.

B. If you are a member of a Tribe terminated since 1940 or a State recognized Tribe and first or second degree descendant, provide official documentation that you meet the requirements of Tribal membership as prescribed by the charter, articles of incorporation or other legal instrument of the Tribe and have been officially designated as a Tribal member as evidenced by an accompanying document signed by an authorized Tribal official; or other evidence, satisfactory to the Secretary of the Interior, that you are a member of the Tribe. In addition, if the terminated or state recognized Tribe of which you are a member is not on a list of such Tribes published by the Secretary of the Interior in the **Federal Register,** you must submit an official signed document that the Tribe has been terminated since 1940 or is recognized by the state in which the Tribe is located in accordance with the law of that state.

C. If you are not a Tribal member but are a natural child or grandchild of a Tribal member you must submit: (1) Evidence of that fact, e.g., your birth certificate and/or your parent's birth certificate showing the name of the Tribal member; and (2) evidence of your parent's or grandparent's Tribal membership in accordance with paragraphs A and B. The relationship to the Tribal member must be clearly documented. Failure to submit the required documentation will result in the application not being accepted for review.

Note: If you meet the criteria of B or C you are eligible only for the Preparatory or Pregraduate Scholarships.

- Two Faculty/Employee Evaluations with original signature.
- Reasons for Requesting the Scholarship.
- Delinquent Debt Form.
- 2010 W–4 Form with original signature.
- Course Curriculum Verification with original signature.
- Acknowledgement Card.
- Curriculum for Major.

Health Professions Applicants Only:

- Health Related Experience (MPH only)—Optional Form.

3. Submission Dates and Times

Application Receipt Date: The application deadline for *new* applicants is Sunday, March 28, 2010.

Applications (original and one copy) shall be considered as meeting the deadline if they are received by the appropriate IHS Area Scholarship Coordinator on the deadline date or postmarked on or before the deadline date. Applicants should request a legibly dated U.S. Postal Service postmark or obtain a legibly dated receipt from a commercial carrier or U.S. Postal Service. Private metered postmarks will not be acceptable as proof of timely mailing and will not be considered for funding. Once the application is received, the applicant will receive an "Acknowledgement of Receipt of Application" (IHS–815) card that is included in the application packet. Applications received after the announced closing date will be returned to the applicant and will not be considered for funding.

4. Intergovernmental Review

Executive Order 12372 requiring intergovernmental review is not applicable to this program.

5. Funding Restrictions

No more than 5% of available funds will be used for part-time scholarships this fiscal year. Students are considered part-time if they are enrolled for a

minimum of six hours of instruction and are not considered in full-time status by their college/university. Documentation must be received from part-time applicants that their school and course curriculum allows less than full-time status. Both part-time and full-time scholarship awards will be made in accordance with 42 CFR Parts 136.320, 136.330 and 136.370 incorporated in the application materials; and for Health Professions Scholarship Program for Indians.

6. Other Submissions Requirements

New applicants are responsible for using the online application or contacting and requesting an application packet from their IHS Area Scholarship Coordinator. Continuation students are also encouraged to use the online application process; however, the Division of Grant Operations will also mail continuation students an application packet. If you do not receive this information please contact your IHS Area Scholarship Coordinator to request a continuation application.

Continuing students must submit a complete application (original plus one copy) and meet the deadline of Sunday, February 28, 2010; *there will be no exceptions.*

V. Application Review Information

1. Criteria

Applications will be reviewed and scored with the following criteria:

• Needs of the IHS (health personnel needs in Indian Country) (30 points):

Applicants are considered for scholarship awards based on their desired career goals and how these goals relate to current Indian health personnel needs. Applications for each health career category are reviewed and ranked separately.

• Academic Performance (40 points):

Applicants are rated according to their academic performance as evidenced by transcripts and faculty evaluations. In cases where a particular applicant's school has a policy not to rank students academically, faculty members are asked to provide a personal judgment of the applicant's achievement. Health Professions applicants with a cumulative GPA below 2.0 are not eligible for award.

• Faculty/Employer Recommendations (30 points):

Applicants are rated according to evaluations by faculty members, current and/or former employers and Tribal officials regarding the applicant's potential in the chosen health related professions.

• Stated Reasons for Asking for the Scholarship and Stated Career Goals (30 points):

Applicants must provide a brief written explanation of reasons for asking for the scholarship and of their career goals. The applicant's narrative will be judged on how well it is written and its content.

• Applicants who are closest to graduation or completion of training are awarded first. For example, senior and junior applicants under the Health Professions Pregraduate Scholarship receives funding before freshmen and sophomores.

• Priority Categories

The following is a list of health professions that will be considered for funding in each scholarship program in FY 2010.

• Indian Health Professions Preparatory Scholarships:

A. Pre-Clinical Psychology (Jr. and Sr. undergraduate years).

B. Pre-Dietetics (Jr. and Sr. undergraduate years).

C. Pre-Medical Technology (Jr. and Sr. undergraduate years).

D. Pre-Nursing.

E. Pre-Occupational Therapy.

F. Pre-Pharmacy.

G. Pre-Physical Therapy (Jr. and Sr. undergraduate years).

H. Pre-Social Work (Jr. and Sr. undergraduate years).

• Indian Health Professions Pregraduate Scholarships:

A. Pre-Dentistry.

B. Pre-Medicine.

C. Pre-Podiatry.

D. Pre-Optometry.

• Indian Health Professions Scholarship:

A. Chemical Dependency Counseling: Baccalaureate and Master's Level.

B. Clinical Psychology: PhD Program.

C. Dental Hygiene: B.S.

D. Dentistry: D.D.S. and D.M.D.

E. Diagnostic Radiology Technology: Certificate, Associates and B.S.

F. Dietitian: B.S.

G. Environmental Health & Engineering: B.S.

H. Health Records: R.H.I.T. and R.H.I.A.

I. Medical Technology: B.S.

J. Medicine: Allopathic and Osteopathic.

K. Nurse: Associate and Bachelor Degrees and advanced degrees in Psychiatry, Geriatric, Women's Health, Pediatric Nursing, Nurse Anesthetist, and Nurse Practitioner.

(Priority consideration will be given to Registered Nurses employed by the IHS; in a program conducted under a contract or compact entered into under the Indian Self-Determination Act and Education Assistance Act (Pub. L. 93–638) and its amendments; or in a program assisted under Title V of the IHCIA.)

L. Occupational Therapy: B.S. or Masters.

M. Optometry: O.D.

N. Pharmacy: Pharm.D.

O. Physician Assistant: PA–C.

P. Physical Therapy: M.S. and D.P.T.

Q. Podiatry: D.P.M.

R. Respiratory Therapy: BS Degree.

S. Social Work: Masters Level only (Direct Practice and Clinical concentrations).

T. Ultrasonography (Prerequisite: Diagnostic Radiology Technology).

2. Review and Selection Process

The applications will be reviewed and scored by the IHS Scholarship Program's Application Review Committee appointed by the IHS. Each reviewer will not be allowed to review an application from his/her area or his/her own Tribe. Each application will be reviewed by three reviewers. The average score of the three reviews provides the final Ranking Score for each applicant. To determine the ranking of each applicant, these scores are sorted from the highest to the lowest within each scholarship, health discipline, date of graduation, and score. If several students have the same date of graduation and score within the same discipline, computer ranking list will randomly sort and will not be sorted by alphabetical name. Selections for recommendations to the Director, IHS, are then made from the top of each ranking list to the extent that funds allocated by the IHS among the three scholarships are available for obligation.

VI. Award Administration Information

1. Award Notices

It is anticipated that continuing applicants will be notified in writing during the first week of June and new applicants will be notified in writing during the first week of July 2010. An Award Letter will be issued to successful applicants. Unsuccessful applicants will be notified in writing, which will include a brief explanation of the reasons the application was not successful and provide the name of the IHS official to contact if more information is desired.

2. Administrative and National Policy Requirements

Regulations at 42 CFR Part 136.304 provide that the IHS shall, from time to time, publish a list of health professions eligible for consideration for the award of Indian Health Professions Preparatory

and Pregraduate Scholarships and Indian Health Professions Scholarship. Section 104(b)(1) of the IHCIA, as amended by the Indian Health Care Amendment of 1988, Public Law 100–713, authorizes the IHS to determine specific health professions for which Indian Health Scholarships will be awarded.

Awards for the Indian Health Professions Scholarships will be made in accordance with 42 CFR 136.330.

Recipients shall incur a service obligation prescribed under section 338A of the Public Health Service Act (42 U.S.C. 2541) which shall be met by service:

(1) In the IHS;

(2) in a program conducted under a contract or compact entered into under the Indian Self-Determination Act and Education Assistance Act (Pub. L. 93–638) and its amendments;

(3) in a program assisted under Title V of the Indian Health Care Improvement Act (Pub. L. 94–437) and its amendments; or

(4) in a private practice option of his or her profession, if the practice (a) is situated in a health professional shortage area, designated in regulations promulgated by the Secretary of Health and Human Services (Secretary) and (b) addresses the health care needs of a substantial number (51%) of Indians as determined by the Secretary in accordance with guidelines of the Service.

Pursuant to the Indian Health Amendments of 1992, (Pub. L. 102–573), a recipient of an Indian Health Professions Scholarship may, at the election of the recipient, meet his/her active duty service obligation prescribed under section 338A of the Public Health Service Act (42 U.S.C. 2541) by a program specified in options (1)–(4) above that:

(i) Is located on the reservation of the Tribe in which the recipient is enrolled; or

(ii) Serves the Tribe in which the recipient is enrolled.

In summary, all recipients of the Indian Health Professions Scholarship are reminded that recipients of this scholarship incur a service obligation. Moreover, this obligation shall be served at a facility determined by the Director, IHS, consistent with IHCIA, Public Law 94–437, as amended by Public L. 100–713, and Pub. L. 102–573.

3. Reporting Scholarship Program Minimum Academic Requirements

It is the policy of the IHS that a scholarship recipient awarded under the Health Professions Scholarship Program of the Indian Health Care Improvement Act maintain a 2.0 cumulative grade point average (GPA) each semester/quarter and maintain full-time student status (minimum of 12 credit hours considered by your school as full-time). A recipient of a scholarship under the Health Professions Pre-Graduate and Health Professions Preparatory Scholarship authority must maintain good academic standing each semester/quarter and be a full time student (minimum of 12 credit hours or the number of credit hours considered by your school as full-time). In addition to the two requirements stated above, a Health Professions Scholarship program grantee must be enrolled in an approved/accredited school for a health professions degree. Part-time students for the three scholarship programs must also maintain a 2.0 cumulative GPA and must take at least six credit hours each semester/quarter but less than the number of hours considered full-time by your school. Scholarship grantees must be approved for part-time status at the time of scholarship award. Scholarship grantees may not change from part-time status to full-time status or vice versa in the same academic year.

The following reports must be sent to the IHS Scholarship Program at the identified time frame. Each scholarship grantee will be provided with an IHS Scholarship Handbook where the needed reports are located. If a scholarship grantee fails to submit these reports as required, they will be ineligible for continuation of scholarship support and scholarship award payments will be discontinued.

A. Recipient's Enrollment and Initial Progress Report

Within thirty (30) days from the beginning of each semester or quarter, scholarship grantees must submit a Recipient's Enrollment and Initial Progress Report (Form IHS–856–10, page 63 of the student handbook).

B. Transcripts

Within thirty (30) days from the end of each academic period, *i.e.,* semester, quarter, or summer session, scholarship grantees must submit an Official Transcript showing the results of the classes taken during that period.

C. Notification of Academic Problem/Change

If at any time during the semester/quarter, scholarship grantees are advised to reduce the number of credit hours for which they are enrolled below the minimum of the 12 (or the number of hours considered by their school as full-time) for a full-time student or at least six hours for part-time students; or if they experience academic problems, they must submit this report (Form IHS–856–11, page 65 of the student handbook).

D. Change of Status

- Change of Academic Status

Scholarship Grantees must immediately notify the IHS Area Scholarship Coordinator and their Scholarship Program Analyst if they are placed on academic probation, dismissed from school, or voluntarily withdraw for any reason (personal or medical).

- Change of Health Discipline

Scholarship Grantees may not change from the approved IHS Scholarship Program health discipline during the school year. If an unapproved change is made, scholarship payments will be discontinued.

- Change in Graduation Date

Any time that a change occurs in a scholarship grantee's expected graduation date, they must notify their IHS Area Scholarship Coordinator immediately in writing. Justification must be attached from the school advisor.

VII. Agency Contacts

Please address application inquiries to the appropriate IHS Area Scholarship Coordinator. Other programmatic inquiries may be addressed to Dr. Dawn Kelly, Chief, Scholarship Program, 801 Thompson Avenue, Suite 120, Rockville, Maryland 20852; Telephone (301) 443–6622. (This is not a toll-free number). For grants information, contact the Grants Scholarship Coordinator, Division of Grants Operations, Indian Health Service, 801 Thompson Avenue, Suite 120, Rockville, Maryland 20852; Telephone (301) 443–0243. (This is not a toll-free number.)

VIII. Other Information

The Public Health Service (PHS) is committed to achieving the health promotion and disease prevention objectives of *Health People 2010,* a PHS-led activity for setting priority areas. This program announcement is related to the priority area of Education and Community-Based Programs. Potential applicants may obtain a copy of *Healthy People 2010,* (Full Report; Stock No. 017–001–00474–0) or *Healthy People 2010* (Summary Report, Stock No. 017–001–00473–1) through the Superintendent of Documents, Government Printing Office, Washington, DC 20402–9325 [Telephone (202) 783–3238].

Interested individuals are reminded that the list of eligible health and allied professions is effective for applicants for

the 2010–2011 academic year. These priorities will remain in effect until superseded. Applicants for health and allied health professions not on the above priority list will be considered pending the availability of funds and dependent upon the availability of qualified applicants in the priority areas.

Dated: December 29, 2009.

Yvette Roubideaux,

Director, Indian Health Service.

[FR Doc. E9–31374 Filed 1–8–10; 8:45 am]

BILLING CODE 4165–16–P

DEPARTMENT OF HEALTH AND HUMAN SERVICES

Indian Health Service

FY 2010 Special Diabetes Program for Indians Community-Directed Grant Program

Announcement Type: New/Competing Continuation.

Funding Opportunity Number: HHS–2010–IHS–SDPI–0003.

Catalog of Federal Domestic Assistance Number: 93.237.

Key Dates

Application Deadline: February 19, 2010.

Review Date: March 17–19, 2010.

Earliest Anticipated Start Date: April 1, 2010.

Other information: This announcement will be open throughout Fiscal Year (FY) 2010 based on existing budget cycles. Refer to application instructions for additional details. This current announcement targets grantees that currently operate under a budget cycle that begins on April 1.

I. Funding Opportunity Description

Statutory Authority

The Indian Health Service (IHS) is accepting grant applications for the FY 2010 Special Diabetes Program for Indians (SDPI) Community-Directed grant program. This competitive grant announcement is open to all existing SDPI grantees that have an active grant in place and are in compliance with the previous terms and conditions of the grant. This program is authorized under H.R. 6331 "Medicare Improvement for Patients and Providers Act of 2008" (Section 303 of Pub. L. 110–275) and the Snyder Act, 25 U.S.C. 13. The program is described in the Catalog of Federal Domestic Assistance (CDFA) under 93.237.

Overview

The SDPI seeks to support diabetes treatment and prevention activities for American Indian/Alaska Native (AI/AN) communities. Grantees will implement programs based on identified diabetes-related community needs. Activities will be targeted to reduce the risk of diabetes in at-risk individuals, provide services that target those with new onset diabetes, provide high quality care to those with diagnosed diabetes, and/or reduce the complications of diabetes.

The purpose of the FY 2010 SDPI Community-Directed grant program is to support diabetes treatment and prevention programs that have a program plan which integrates at least one IHS Diabetes Best Practice and that have a program evaluation plan in place which includes tracking outcome measures.

This is not an application for continued funding as was previously available for Community-Directed grant programs.

Background

Diabetes Among American Indian/Alaska Native Communities

During the past 50 years, type 2 diabetes has become a major public health issue in many AI/AN communities, and it is increasingly recognized that AI/AN populations have a disproportionate burden of diabetes (Ghodes, 1995). In 2006, 16.1% of AI/ANs aged 20 years or older had diagnosed diabetes (unpublished IHS Diabetes Program Statistics, 2006) compared to 7.8% for the non-Hispanic white population (CDC, 2007). In addition, AI/AN people have higher rates of diabetes-related morbidity and mortality than in the general U.S. population (Carter, 1996; Harris, 1995; Gilliland, 1997). Strategies to address the prevention and treatment of diabetes in AI/AN communities are urgently needed.

Under the Balanced Budget Act of 1997, Congress authorized the IHS to administer the SDPI grant program. SDPI grants are programmatically directed by the IHS Division of Diabetes Treatment and Prevention (DDTP).

Special Diabetes Program for Indians

The SDPI is a $150 million per year grant program. Over 330 programs have received SDPI Community-Directed grants annually since 1998. In addition, 66 demonstration projects have been funded annually since 2004 to address prevention of type 2 diabetes or cardiovascular disease risk reduction. A Congressional re-authorization in 2008 extended the SDPI through FY 2011.

II. Award Information

Type of Awards

Grants.

Estimated Funds Available

The total amount of funding identified for FY 2010 SDPI Community-Directed grant program is $104.8 million. Funds available to each IHS Area and to urban Indian health programs have been determined through Tribal consultation. Within each area, local Tribal consultation guided IHS decision-making on how much funding is available per eligible applicant. FY 2010 SDPI funding remains unchanged from FY 2009, per Tribal consultation. All awards issued under this announcement are subject to the availability of funds. In the absence of funding, the agency is under no obligation to make awards funded under this announcement.

Anticipated Number of Awards

Approximately 50 awards will be issued for Budget Cycle III. Applications will be accepted from grantees whose current SDPI FY 2009 grants end on March 31, 2009. Additionally, Budget Cycle II grantees that were deemed ineligible due to incomplete applications or that possessed delinquent OMB A–133 financial audits can resubmit applications under the timelines for Budget Cycle III.

Project Period

The project period for grants made under this announcement is 24 months, subject to the availability of funds.

III. Eligibility Information

1. Eligible Applicants

Eligible applicants include the following:

- *Federally-recognized Tribes operating an Indian health program* operated pursuant to a contract, grant, cooperative agreement, or compact with the IHS pursuant to the Indian Self-Determination and Education Assistance Act (ISDEAA), (Pub. L. 93–638).
- *Tribal organizations operating an Indian health program* operated pursuant to a contract, grant, cooperative agreement, or compact with the IHS pursuant to the ISDEAA, (Pub. L. 93–638).
- *Urban Indian health programs* that operate a Title V Urban Indian Health Program: This includes programs currently under a grant or contract with the IHS under Title V of the Indian Health Care Improvement Act, (Pub. L. 93–437).

• *Indian Health Service facilities* (refer to paragraph 3 below in this Section).

Current SDPI grantees are eligible to apply for competing continuation funding under this announcement and must demonstrate that they have complied with previous terms and conditions of the SDPI grant in order to receive funding under this announcement.

Non-profit Tribal organizations and national or regional health boards are not eligible, consistent with past Tribal consultation. Applicants that do not meet these eligibility requirements will have their applications returned without further consideration.

Under this announcement, only one SDPI Community-Directed diabetes grant will be awarded per entity. If a Tribe submits an application, their local IHS facility cannot apply; if the Tribe does not submit an application, the IHS facility can apply. Tribes that are awarded grant funds may sub-contract with local IHS facilities to provide specific clinical services. In this case, the Tribe would be the primary SDPI grantee and the Federal entity would have a sub-contract within the Tribe's SDPI grant.

Collaborative Arrangements

Tribes are encouraged to collaborate with any appropriate local entities including IHS facilities. If a Tribe seeks to provide specific clinical or support services, it may implement a sub-contract with these entities in order to transfer funds. The amount of SDPI funding that the Tribe receives remains the same. The Tribe, as the primary grantee, arranges with the entity to provide specified services that support the program's plan. The entity may request direct costs only.

When a Tribe sub-contracts with the local IHS facility, application requirements for collaborative arrangements include:

• A signed Memorandum of Agreement (MOA) must be submitted with the SDPI application. The MOA must include the scope of work assigned to the sub-contracting IHS facility.

• The IHS Area Director and the Tribal Chairperson must give signed approval of the MOA.

• The Tribe's application must include additional SF–424 and SF–424A forms that are completed by the IHS facility which includes a budget narrative and a face page that is signed by the Chief Executive Officer (CEO).

Applications With Sub-Grants

Programs that submit one application on behalf of multiple organizations (sub-grantees) must submit copies of selected application forms and documents for each of their sub-grantees. (See Section IV, Subsection 2 for specifics.) All sub-grantees must meet the eligibility requirements noted in Subsection 1 above.

2. Cost Sharing or Matching

The FY 2010 Special Diabetes Program for Indians (SDPI) Community-Directed grant program does not require matching funds or cost sharing.

3. Other Requirements

A. Program Coordinator

Provide information about the SDPI Program Coordinator on the "Key Contacts Form" which is included in the application package. The Program Coordinator must meet the following requirements:

• Have relevant health care education and/or experience.

• Have experience with program management and grants program management, including skills in program coordination, budgeting, reporting and supervision of staff.

• Have a working knowledge of diabetes.

B. Documentation of Support

Tribal Organizations

Existing SDPI grantees must submit a current, signed and dated Tribal resolution or Tribal letter of support from all Indian Tribe(s) served by the project. Applications from each Tribal organization must include specific resolutions or letters of support from all Tribes affected by the proposed project activities.

If the Tribal resolution or Tribal letter of support is not submitted with the application, it must be received in the Division of Grants Operations (DGO) prior to the objective review date, March 17, 2010.

Title V Urban Indian Health Programs

Urban Indian health programs must submit a letter of support from the organization's board of directors. Urban Indian health programs are non-profit organizations and must also submit a copy of the 501(c)(3) Certificate. All letters of support must be included in the application or submitted to the DGO prior to the objective review date, March 17, 2010.

IHS Hospitals or Clinics

IHS facilities must submit a letter of support from the CEO.

The documentation must be received in the DGO prior to the objective review date, March 17, 2010.

IV. Application and Submission Information

1. Obtaining Application Materials

The application package and instructions may be found at *http://www.Grants.gov.*

2. Content and Form of Application Submission

Mandatory documents for all applicants include:

• Application forms:
  ○ SF–424.
  ○ SF–424A.
  ○ SF–424B.
  ○ Key Contacts Form.
• Budget Narrative.
• Project Narrative.
• Tribal Resolution or Tribal Letter of Support (Tribal Organizations only).
• Letter of Support from Organization's Board of Directors (Title V Urban Indian Health Programs only).
• 501(c)(3) Certificate (Title V Urban Indian Health Programs only).
• CEO Letters of Support (IHS facilities only).
• 2008 and 2009 IHS Diabetes Care and Outcomes Audit Report.
• Biographical sketches for all Key Personnel.
• Disclosure of Lobbying Activities (SF–LLL) (if applicable).
• Documentation of OMB A–133 required Financial Audit for FY 2007 and FY 2008. Acceptable forms of documentation include:
  ○ E-mail confirmation from Federal Audit Clearinghouse (FAC) that audits were submitted; or
  ○ Face sheets from audit reports. These can be found on the FAC Web site: *http://harvester.census.gov/fac/dissem/accessoptions.html?submit=Retrieve+Records*.

Mandatory Documents for Programs That Proposed Sub-Grantees

The primary grantee for applications that propose sub-grantees must submit all of the mandatory documents listed above. In addition, they must submit the following documents for each sub-grantee:

• SF–424, SF–424A, SF–424B and Key Contacts Form.
• Project Narrative.
• Budget Narrative.
• 2008 and 2009 IHS Diabetes Care and Outcomes Audit Reports.

A separate budget is required for each sub-grantee, but the primary grantee's application must reflect the total budget for the entire cost of the project.

Mandatory Documents for Programs That Propose Sub-Contracts With Local IHS Facilities

Programs that propose sub-contracts with IHS facilities to provide clinical

services must submit the documents noted below for the sub-contractor:

- MOA that is signed by the primary grantee, the sub-contractor, the IHS Area Director and the Tribal Chairperson.
- SF–424 and SF–424A forms completed by the IHS facility (in addition to the primary applicant's SF–424 forms).

A separate budget is required for the sub-contract, but the primary grantee's application must reflect the total budget for the entire cost of the project.

Public Policy Requirements: All Federal-wide public policies apply to IHS grants with the exception of the Discrimination Policy.

Requirements for Project and Budget Narratives

A. *Project Narrative:* This narrative should be a separate Word document that is no longer than 13–17 pages (see page limitations for each Part noted below) with consecutively numbered pages. Be sure to place all responses and required information in the correct section or they will not be considered or scored. If the narrative exceeds the page limit, only the first 13–17 pages will be reviewed. There are three parts to the narrative: Part A—Program Information; Part B—Program Planning and Evaluation; and Part C—Program Report. A sample project narrative and template are available in the application instructions. See below for additional details about what must be included in the narrative.

Part A: Program Information (no more than 4 pages)

Section 1: Community Needs Assessment

A1.1 Describe the burden of diabetes in your community. Include estimates of the number of people diagnosed with diabetes and the total number of people. Describe how you calculated these estimates.

A1.2 Briefly describe the top diabetes-related health issues in your community.

A1.3 Briefly describe the unique challenges your program experiences related to prevention and treatment of diabetes.

Section 2: Leadership Support

A2.1 Question: Has at least one organization administrator or Tribal leader agreed to be actively involved in your program's work? (Yes or No).

A2.2 Provide the name and role or position that this leader holds.

A2.3 Describe how this leader will be involved with your program.

Section 3: Personnel

Using the table format that is in the application instructions, provide the following information for each person who will be paid with SDPI funds:

A3.1 Name.

A3.2 Title.

A3.3 Brief description of tasks/activities.

A3.4 Is this person already on staff with your SDPI or diabetes program?

A3.5 What percent FTE of this person's salary will be paid using SDPI funds?

Section 4: Diabetes Audit Review

Obtain copies of your local IHS Diabetes Care and Outcomes Audit Reports for 2008 and 2009. Review and compare the results for these two years. Work with your local audit coordinator or Area Diabetes Consultant (ADC) if you need help.

A4.1 Provide a list of results for three to five items/elements (e.g., A1c, eye exam, education, *etc.*) that improved from 2008 to 2009.

A4.2 Provide a list of three to five items/elements that need to be improved.

A4.3 Describe how your program will address these three to five items/elements that need to be improved or describe how your program will work with your local health care facility to address these areas.

Section 5: Collaboration

A5.1 Describe existing partnerships and collaborations that your program has in place.

A5.2 Describe new partnerships and collaboration that your program is planning to implement.

Part B: Program Planning and Evaluation (no more than 3 pages, with 2 pages for each additional Best Practice)

Section 1: Overview

Each 2009 IHS Diabetes Best Practice includes two specific measures that are called "key measures." Programs may track additional measures based on local priorities. A list of all Best Practices is located in the application instructions. This list provides a short description of the contents and key measures for each Best Practice.

B1.1 List which IHS Diabetes Best Practice(s) your program will implement in order to address the needs that were identified in your community assessment.

Section 2: Program Planning

Provide the information requested below separately for each Best Practice that will be implemented:

B2.1 Target Population: What population will you target?

B2.2 Goal: Describe the goal that your program wants to achieve as a result of implementing the selected Best Practice.

B2.3 Objectives/Measures: List the objective(s) your program will work to accomplish, with at least one measure identified for each objective. Be sure to include the two key measures for your selected Best Practice and use the SMART format (see application instructions for additional information). Also, indicate how frequently your program will review data for each measure. (Choose from the following options: weekly, twice a month, monthly, every other month, or quarterly).

B2.4 Activities: List the activities that your program will do to meet the selected Best Practice objectives. These could be events you will organize, services you will offer, materials you will develop and implement, or other activities.

Section 3: Evaluation

B3.1 Describe how your program will track activities for the selected Best Practice(s).

B3.2 Describe how your program will collect and track data on all measures (listed in Section 2 above) for the selected Best Practice(s).

B3.3 Describe how your program will collect stories about individual participants, community events, program staff, and other aspects of your program.

Part C: Program Report (no more than 4 pages)

Section 1: Major Accomplishments and Activities

C1.1 Describe three major accomplishments that your SDPI program achieved in the past 12 months.

C1.2 Describe three to five major accomplishments that your SDPI program has achieved since it began.

C1.3 Describe one story that exemplifies a major program accomplishment from the past year.

C1.4 Describe your SDPI program's primary activities during the past 12 months.

C1.5 Describe your SDPI program's primary activities since it began.

Section 2: Challenges

C2.1 Describe the two or three biggest challenges that your SDPI program encountered in the past 12 months.

C2.2 Describe how your SDPI program addressed these challenges.

C2.3 Indicate if you successfully addressed these challenges. (If so, why; if not, why not.)

Section 3: Dissemination

C3.1 Describe three to five major lessons that your SDPI program has learned since it began.

C3.2 Describe how your SDPI program has shared the lessons that you have learned with other diabetes programs.

C3.3 Describe materials or products your SDPI program has developed.

Section 4: Other Information

C4.1 Provide any additional information about your SDPI program.

B. Budget Narrative (no more than 4 pages)

The budget narrative should explain why each budget item on the SF–424A is necessary and relevant to the proposed project.

3. Submission Dates and Times

Applications are to be submitted electronically through Grants.gov by February 19, 2010 at 12 midnight Eastern Standard Time (EST). Any application received after the application deadline will not be accepted for processing, and it will be returned to the applicant(s) without further consideration for funding.

If technical challenges arise and the applicants need help with the electronic application process, contact Grants.gov Customer Support via e-mail to *support@grants.gov* or at (800) 518–4726. Customer Support is available to address questions 24 hours a day, 7 days a week (except on Federal holidays). If problems persist, contact Tammy Bagley, Senior Grants Policy Analyst, IHS Division of Grants Policy (DGP) (*tammy.bagley@ihs.gov*) at (301) 443–5204 to describe the difficulties being experienced. Be sure to contact Ms. Bagley at least *ten days prior* to the application deadline.

Please do not contact the DGP until you have received a Grants.gov tracking number. In the event you are not able to obtain a tracking number, call the DGP as soon as possible.

If an applicant needs to submit a paper application instead of submitting electronically via Grants.gov, prior approval must be requested and obtained (see page 16 for additional information). The waiver must be documented in writing (e-mails are acceptable), *before* submitting a paper application. After a waiver is received, the application package must be downloaded by the applicant from Grants.gov. Once completed and printed, the original application and two copies must be sent to Denise E. Clark, Division of Grants Operations (DGO) (denise.clark@ihs.gov), 801 Thompson Avenue, TMP, Suite 360, Rockville, MD 20852. Paper applications that are submitted without a waiver will be returned to the applicant without review or further consideration.

4. Intergovernmental Review

Executive Order 12372 requiring intergovernmental review is not applicable to this program.

5. Funding Restrictions

A. Pre-award costs are allowable pending prior approval from the awarding agency. However, in accordance with 45 CFR Part 74 and 92, pre-award costs are incurred at the applicant's risk. The awarding office is under no obligation to reimburse such costs if for any reason the applicant does not receive an award or if the award is less than anticipated.

B. The available funds are inclusive of direct and appropriate indirect costs (*see* Section VI, Subsection 3).

C. Only one grant will be awarded per applicant.

6. Electronic Submission Requirements

Use the *http://www.Grants.gov* Web site to submit an application electronically; select the "Apply for Grants" link on the homepage. Download a copy of the application package, complete it offline, and then upload and submit the application via the Grants.gov Web site. Electronic copies of the application may not be submitted as attachments to e-mail messages addressed to IHS employees or offices.

Applicants that receive a waiver to submit paper application documents must follow the rules and timelines that are noted below. The applicant must seek assistance at least ten days prior to the application deadline.

Applicants that do not adhere to the timelines for Central Contractor Registry (CCR) and/or Grants.gov registration and/or request timely assistance with technical issues will not be considered for a waiver to submit a paper application.

Please be aware of the following:

- Paper applications are not the preferred method for submitting applications.
- If you have problems electronically submitting your application on-line, contact Grants.gov Customer Support via e-mail to *support@grants.gov* or at (800) 518–4726. Customer Support is available to address questions 24 hours a day, 7 days a week (except on Federal holidays). If problems persist, contact Tammy Bagley, Senior Grants Policy Analyst, DGP, at (301) 443–5204.
- Upon contacting Grants.gov, obtain a tracking number as proof of contact. The tracking number is helpful if there are technical issues that cannot be resolved and a waiver to submit a paper application must be obtained.
- If it is determined that a waiver is needed, the applicant must submit a request in writing (e-mails are acceptable) to *michelle.bulls@ihs.gov* that includes a justification for the need to deviate from the standard electronic submission process. If the waiver is approved, the application package must be downloaded by the applicant from Grants.gov. Once completed and printed, it should be sent directly to the DGO by the deadline date of February 19, 2010 (*see* Section IV, Subsection 3 for details).
- Upon entering the Grants.gov site, there is information that outlines the requirements to the applicant regarding electronic submission of an application through Grants.gov, as well as the hours of operation.
- Applicants are strongly encouraged not to wait until the deadline date to begin the application process through Grants.gov as the registration process for CCR and Grants.gov could take up to fifteen working days.
- In order to use Grants.gov, the applicant must have a Dun and Bradstreet (DUNS) Number and register in the Central Contractor Registration (CCR). A minimum of ten working days should be allowed to complete CCR registration. See Subsection 8 below for more information.
- All documents must be submitted electronically, including all information typically included on the SF–424 and all necessary assurances and certifications.
- Please use the optional attachment feature in Grants.gov to attach additional documentation that may be requested by IHS.
- The application must comply with any page limitation requirements described in the Funding Announcement.
- After you electronically submit your application, you will receive an automatic acknowledgment from Grants.gov that contains a Grants.gov tracking number. The DGO will download your application from Grants.gov and provide necessary copies to the DDTP. Neither the DGO nor the DDTP will notify applicants that the application has been received.
- You may access the electronic application package and instructions for this Funding Opportunity Announcement on *http://www.Grants.gov*.
- You may search for the application package on Grants.gov either with the CFDA number or the Funding Opportunity Number. Both numbers are identified in the heading of this announcement.
- The applicant must provide the Funding Opportunity Number: HHS–2010–IHS–SDPI–0002.

DUNS Number

Applicants are required to have a DUNS number to apply for a grant or cooperative agreement from the Federal Government. The DUNS number is a nine-digit identification number, which uniquely identifies business entities. Many organizations may already have a DUNS number. Obtaining a DUNS number is easy and there is no charge. To obtain a DUNS number or to find out if your organization already has a DUNS number, access *http://fedgov.dnb.com/webform*.

Applicants must also be registered with the CCR. A DUNS number is required before an applicant can complete their CCR registration. Registration with the CCR is free of charge. Applicants may register online at *http://www.ccr.gov.* More detailed information regarding the DUNS, CCR, and Grants.gov processes can be found at: *http://www.Grants.gov.*

V. Application Review Information

1. Criteria

Criteria that will be used to evaluate the application are divided into three categories. They include:

- Project Narrative.

The project narrative is divided into three parts: Part A—Program Information; Part B—Program Planning/Evaluation; and Part C—Project Report. Required information includes topics such as: community needs assessment, leadership support, use of Diabetes Audit results, selected Best Practice(s), overall evaluation plan and project accomplishments. For each Best Practice that will be implemented, address: target population, goal, objectives/measures, review of key measures, and activities (*see* Section IV, Part B, Section 2).

- Budget Narrative.

The budget narrative provides additional explanation to support the information provided on the SF–424A form. Budget categories to address include: personnel, fringe benefits, travel, equipment and supplies, contractual/consultant and constructions/alterations/renovations. In addition to a line item budget, provide a brief justification of each budget item and how they support project objectives.

- Key Contacts Form.

This form seeks to obtain contact information about only one person: the project's SDPI Program Coordinator.

Scoring of Applications

Points will be assigned in each category adding up to a total of 100. A minimum score of 60 points is required for funding. Points will be assigned as follows:

- *Project Narrative:* A total of 90 possible points are available for this information. It is divided into two parts: Program Information (20 possible points); Program Planning/Evaluation (60 possible points); and Program Report (10 possible points).
- *Budget Narrative:* A total of 10 possible points are available for this information.

2. Review and Selection Process

Each application will be prescreened by DGO staff for eligibility and completeness as outlined in this Funding Opportunity Announcement. Applications from entities that do not meet eligibility criteria or that are incomplete will not be reviewed. Applicants will be notified by the DGO that their application did not meet minimum requirements.

After being prescreened by the DGO, applications will be reviewed by an Objective Review Committee (ORC) and assigned a score. The ORC is an objective review group that will be convened by the DDTP in consultation with the DGP as required by Department of Health and Human Services (HHS) Grants Policy.

To obtain a minimum score for funding, applicants must address all program requirements and provide all required documentation. Applicants that receive less than a minimum score will be informed via e-mail of their application's deficiencies. (see Section 6 below for application revision guidance). A summary statement outlining the weaknesses of the application will be provided to these applicants. The summary statement will be sent to the Authorized Organizational Representative (AOR) that is identified on the face page of the application.

Review of Applications With Sub-Grants

When an application is submitted on behalf of multiple organizations (sub-grantees), the review score will be a combined score that is based on information provided by all of these organizations.

Programmatic Requirements

Funded applicants (grantees) must meet the following programmatic requirements:

A. Implement an IHS Diabetes Best Practice

Grantees must implement recommended services and activities from at least one 2009 IHS Diabetes Best Practice. They should implement recommendations based on program need, strengths, and resources. Program activities, services and key measures from the selected Best Practice(s) must be documented in the project narrative (see Section IV, Part B, Section 2).

B. Implement Program and Evaluation Plans

Grantees must follow the plans submitted with their application when implementing each selected Best Practice and their evaluation processes. A minimum evaluation requirement is to monitor the key measures over time. Programs may track additional measures based on local priorities.

C. Participate in Training and Peer-to-Peer Learning Sessions

Grantees must participate in SDPI training sessions and peer-to-peer learning activities. Training sessions will be primarily conference calls or combined WebEx/conference calls. Grantees will be expected to:

- Participate in interactive discussion during conference calls.
- Share activities, tools and results.
- Share problems encountered and how barriers are broken down.
- Share materials presented at conferences and meetings.
- Participate and share in other relevant activities.

Sessions, which will be led by DDTP, DGO, or their agents, will address clinical and other topics. Topics will include: program planning and evaluation, enhancing accountability through data management, and improvement of principles and processes. Grantees will integrate information and ideas in order to enhance effectiveness. Anticipated outcomes from participating in the learning sessions are improved communication and sharing among grantees, increased use of data for improvement, and enhanced accountability.

Application Revisions

If an application does not receive a minimum score for funding from the ORC, the applicant will be informed via a summary statement that will be sent to the AOR via e-mail. The applicant then has two opportunities to submit revisions to their application. Before application revisions can be submitted, the AOR must have received a summary statement from the previous review that outlines the weaknesses of the initial application.

A. Revision to Initial Application

Applicants will have five business days from the date that the summary statement is sent via e-mail to submit hard copies of their application revisions. Along with the revised application documents, applicants must

prepare and submit an Introduction of not more than three pages that summarizes the substantial additions, deletions, and changes. The Introduction must also include responses to the criticism and issues raised in the summary statement.

The Introduction and revised application documents must be mailed directly to the DGO to the attention of Denise Clark, Lead Grants Management Specialist (*denise.clark@ihs.gov*) at: Division of Grants Operations, 801 Thompson Avenue, TMP, Suite 360, Rockville, MD 20852.

Technical assistance will be available to applicants as they prepare resubmission documentation.

An Ad Hoc Review Committee will be convened specifically to review the initial application revisions. If the revised application receives the minimum score for funding or above, the applicant will be informed via a Notice of Award (NoA). If the Review Committee determines that the application with revisions still does not receive a fundable score, the applicant will be informed of their application's deficiencies via a second summary statement that will be e-mailed to the AOR.

B. Second Application Revision

Applicants will have five business days from the date that the second summary statement is sent via e-mail to submit hard copies of their application revisions. Along with the revised application documents, applicants must prepare and submit an Introduction of not more than three pages that summarizes the substantial additions, deletions, and changes. The Introduction must also include responses to the criticism and issues raised in the summary statement.

The Introduction and revised application documents must, again, be mailed directly to the DGO to the attention of Denise Clark, Lead Grants Management Specialist (*denise.clark@ihs.gov*) at: Division of Grants Operations, 801 Thompson Avenue, TMP, Suite 360, Rockville, MD 20852.

A second Ad Hoc Review Committee will be convened to review the second application revisions. If the application with revisions receives the minimum score for funding or above, the applicant will be informed via a Notice of Award (NoA).

If the Review Committee determines that the application with revisions still does not receive a fundable score, applicants will be informed in writing of their application's deficiencies. No further resubmissions will be allowed.

7. Anticipated Announcement and Award Dates

Grantees that receive a fundable score will be notified of their approval for funding via the NoA. (See application instructions for key dates for other budget cycles.)

VI. Award Administration Information

1. Award Notices

The NoA will be prepared by DGO and sent via postal mail to each applicant that is approved for funding under this announcement. This document will be sent to the person who is listed on the SF–424 as the AOR. The NoA will be signed by the Grants Management Officer. The NoA is the authorizing document for which funds are dispersed to the approved entities. The NoA serves as the official notification of the grant award and reflects the amount of Federal funds awarded, the purpose of the grant, the terms and conditions of the award, the effective date of the award, and the budget/project period. The NoA is the legally binding document. Applicants who are disapproved based on the ORC score will receive a copy of the summary statement which identifies the weaknesses and strengths of the application submitted. The AOR serves as the business point of contact for all business aspects of the award.

The anticipated NoA date for all applicants that score well in the ORC review for Cycle III is April 1, 2010.

2. Administrative Requirements

Grants are administered in accordance with the following regulations, policies, and Office of Management and Budget (OMB) cost principles:

A. The criteria as outlined in this Funding Opportunity Announcement.

B. Administrative Regulations for Grants:

- 45 CFR Part 92—Uniform Administrative Requirements for Grants and Cooperative Agreements to State, Local and Tribal Governments.
- 45 CFR Part 74—Uniform Administrative Requirements for Awards and Subawards to Institutions of Higher Education, Hospitals, Other Non-Profit Organizations, and Commercial Organizations.

C. Grants Policy:

- HHS Grants Policy Statement, Revised 01/2007.

D. Cost Principles:

- OMB Circular A–87—State, Local, and Indian Tribal Governments (Title 2 Part 225).
- OMB Circular A–122—Non-Profit Organizations (Title 2 Part 230).

E. Audit Requirements

- OMB Circular A–133—Audits of States, Local Governments, and Non-Profit Organizations.

3. Indirect Costs

This section applies to all grant recipients that request reimbursement of indirect costs in their grant application. In accordance with HHS Grants Policy Statement, Part II–27, IHS requires applicants to obtain a current indirect cost rate agreement prior to award. The rate agreement must be prepared in accordance with the applicable cost principles and guidance as provided by the cognizant agency or office. A current rate covers the applicable grant activities under the current award's budget period. If the current rate is not on file with the DGO at the time of award, the indirect cost portion of the budget will be restricted. The restrictions remain in place until the current rate is provided to the DGO.

Generally, indirect costs rates for IHS grantees are negotiated with the HHS Division of Cost Allocation *http://rates.psc.gov/and* the Department of the Interior (National Business Center) at *http://www.aqd.nbc.gov/indirect/indirect.asp.* If your organization has questions regarding the indirect cost policy, please contact the DGO at (301) 443–5204.

4. Reporting Requirements

The DDTP and the DGO have requirements for progress reports and financial reports based on the terms and conditions of this grant as noted below.

A. Progress Reports

Program progress reports are required semi-annually. These reports must include at a minimum: reporting of Best Practice measures; and a brief comparison of actual accomplishments to the goals established for the budget period or provide sound justification for the lack of progress.

B. Financial Status Reports

Annual financial status reports are required until the end of the project period. Reports must be submitted annually no later than 30 days after the end of each specified reporting period. The final financial status report is due within 90 days after the end of the 24 month project period. Standard Form 269 (long form for those reporting program income; short form for all others) will be used for financial reporting.

Grantees are responsible and accountable for accurate reporting of the Progress Reports and Financial Status Reports (FSR). According to SF–269 instructions, the final SF–269 must be

verified from the grantee records to support the information outlined in the FSR.

Failure to submit required reports within the time allowed may result in suspension or termination of an active grant, withholding of additional awards for the project, or other enforcement actions such as withholding of payments or converting to the reimbursement method of payment. Continued failure to submit required reports may result in one or both of the following: (1) The imposition of special award provisions; and (2) the non-funding or non-award of other eligible projects or activities. This applies whether the delinquency is attributable to the failure of the grantee organization or the individual responsible for preparation of the reports.

C. FY 2007 and FY 2008 Single Audit Reports (OMB A–133)

Applicants who have an active SDPI grant are required to be up-to-date in the submission of required audit reports. These are the annual financial audit reports required by OMB A–133, audits of State, local governments, and non-profit organizations that are submitted. Documentation of (or proof of submission) of current FY 2007 and FY 2008 Financial Audit Reports is mandatory. Acceptable forms of documentation include: e-mail confirmation from FAC that audits were submitted; or face sheets from audit reports. Face sheets can be found on the FAC Web site: *http://harvester.census.gov/fac/dissem/accessoptions.html?submit=Retrieve+Records.*

Telecommunication for the hearing impaired is available at: TTY (301) 443–6394.

VII. Agency Contacts

- For Grants Budget Management, contact:
- Denise Clark, Lead Grants Management Specialist, DGO (*denise.clark@ihs.gov*), Division of Grants Operations, 801 Thompson Avenue, TMP, Suite 360, Rockville, MD 20852. (301) 443–5204.
- For Grants.gov electronic application process, contact:
- Tammy Bagley, Grants Policy, DGP (*tammy.bagley@ihs.gov*), (301) 443–5204. Grants Policy Web site: *http://www.ihs.gov/NonMedicalPrograms/gogp/index.cfm?module=gogp_funding.*
- For programmatic questions, contact:
- Merle Mike, Program Assistant, DDTP (*merle.mike@ihs.gov*), (505) 248–4182.
- Lorraine Valdez, Deputy Director, DDTP (*s.lorraine.valdez@ihs.gov*), (505) 248–4182.
- Area Diabetes Consultants Web site: *http://www.ihs.gov/MedicalPrograms/diabetes/index.cfm?module=peopleADCDirectory.*

Dated: December 22, 2009.

Yvette Roubideaux,

Director, Indian Health Service.

[FR Doc. 2010–149 Filed 1–8–10; 8:45 am]

BILLING CODE 4165–16–P

DEPARTMENT OF HEALTH AND HUMAN SERVICES

Food and Drug Administration

[Docket No. FDA–2009–N–0606]

General and Plastic Surgery Devices Panel of the Medical Devices Advisory Committee; Amendment of Notice

AGENCY: Food and Drug Administration, HHS.

ACTION: Notice.

SUMMARY: The Food and Drug Administration (FDA) is announcing an amendment to the notice of a meeting of the General and Plastic Surgery Devices Panel of the Medical Devices Advisory Committee. This meeting was announced in the **Federal Register** of November 17, 2009 (74 FR 59194). The amendment is being made to reflect a change in the *Contact Person* and *Procedure* portions of the document, and to provide notice of the availability of a docket for public comment. There are no other changes.

FOR FURTHER INFORMATION CONTACT: Margaret McCabe-Janicki, Center for Devices and Radiological Health, Food and Drug Administration, 10903 New Hampshire Ave., White Oak 66, rm. 1535, Silver Spring, MD 20993, 301–796–7029, or FDA Advisory Committee Information Line, 1–800–741–8138 (301–443–0572 in the Washington, DC area), code 3014512519. Please call the Information Line for up-to-date information on this meeting.

SUPPLEMENTARY INFORMATION: In FR Doc. E9–27491, appearing on page 59194, in the **Federal Register** of Tuesday, November 17, 2009, the following corrections are made:

1. On page 59194, in the second column, under *Contact Person*, the first six lines "Peter L. Hudson, Center for Devices and Radiological Health, Food and Drug Administration, 10903 New Hampshire Ave., White Oak 66, rm. 3618, Silver Spring, MD 20993, 301–796–6440 or FDA Advisory" are removed and replaced with "Margaret McCabe-Janicki, Center for Devices and Radiological Health, Food and Drug Administration, 10903 New Hampshire Avenue., White Oak 66, rm. 1535, Silver Spring, MD 20993, 301–796–7029, or FDA Advisory".

2. On page 59194, in the third column, a *Comments* portion is added before the *Agenda* portion of the document to read: "*Comments*: FDA is opening a docket for public comment on this document. The docket number is FDA–2009–N–0606. The docket will open for public comment on January 11, 2010. The docket will close on March 19, 2010. Interested persons may submit electronic or written comments regarding this document. Submit electronic comments to *http://www.regulations.gov*. Submit written comments to the Division of Dockets Management, Food and Drug Administration, 5630 Fishers Lane, rm. 1061, Rockville, MD 20852. Submit a single copy of electronic comments or two paper copies of any mailed comments, except that individuals may submit one paper copy. Comments are to be identified with the docket number found in brackets in the heading of this document. Received comments may be seen in the Division of Dockets Management between 9 a.m. and 4 p.m., Monday through Friday."

3. On pages 59194 and 59195, beginning on page 59194 in the third column, under *Procedure*, the year "2009" is changed to read "2010" everywhere that it appears.

This notice is issued under the Federal Advisory Committee Act (5 U.S.C. app. 2) and 21 CFR part 14, relating to the advisory committees.

Dated: January 5, 2010.

David Dorsey,

Acting Deputy Commissioner for Policy, Planning and Budget.

[FR Doc. 2010–172 Filed 1–8–10; 8:45 am]

BILLING CODE 4160–01–S

DEPARTMENT OF HEALTH AND HUMAN SERVICES

Food and Drug Administration

[Docket No. FDA–2009–N–0664]

Cardiovascular and Renal Drugs Advisory Committee; Notice of Meeting

AGENCY: Food and Drug Administration, HHS.

ACTION: Notice.

This notice announces a forthcoming meeting of a public advisory committee of the Food and Drug Administration (FDA). The meeting will be open to the public.

Name of Committee: Cardiovascular and Renal Drugs Advisory Committee.

General Function of the Committee: To provide advice and recommendations to the agency on FDA's regulatory issues.

Date and Time: The meeting will be held on March 1, 2010, from 8 a.m. to 5 p.m.

Location: Hilton Washington DC/ Silver Spring, Maryland Ballroom, 8727 Colesville Road, Silver Spring, MD. The hotel telephone number is 301–589–5200.

Contact Person: Elaine Ferguson, Center for Drug Evaluation and Research (HFD–21), Food and Drug Administration, 5600 Fishers Lane, (for express delivery, 5630 Fishers Lane, rm. 1093), Rockville, MD 20857, 301–827–7001, FAX: 301–827–6776, e-mail: *elaine.ferguson@fda.hhs.gov*, or FDA Advisory Committee Information Line, 1–800–741–8138 (301–443–0572 in the Washington, DC area), code 3014512533. Please call the Information Line for up-to-date information on this meeting. A notice in the **Federal Register** about last minute modifications that impact a previously announced advisory committee meeting cannot always be published quickly enough to provide timely notice. Therefore, you should always check the agency's Web site and call the appropriate advisory committee hot line/phone line to learn about possible modifications before coming to the meeting.

Agenda: On March 1, 2010, the committee will discuss biologics license application (BLA) 125288, for belatacept injectable, by Bristol Myers Squibb, to be used in patients with kidney transplants to prevent rejection of the transplanted kidney.

FDA intends to make background material available to the public no later than 2 business days before the meeting. If FDA is unable to post the background material on its Web site prior to the meeting, the background material will be made publicly available at the location of the advisory committee meeting, and the background material will be posted on FDA's Web site after the meeting. Background material is available at *http://www.fda.gov/AdvisoryCommittees/Calendar/default.htm*. Scroll down to the appropriate advisory committee link.

Procedure: Interested persons may present data, information, or views, orally or in writing, on issues pending before the committee. Written submissions may be made to the contact person on or before February 12, 2010. Oral presentations from the public will be scheduled between approximately 1 p.m. and 2 p.m. Those desiring to make formal oral presentations should notify the contact person and submit a brief statement of the general nature of the evidence or arguments they wish to present, the names and addresses of proposed participants, and an indication of the approximate time requested to make their presentation on or before February 4, 2010. Time allotted for each presentation may be limited. If the number of registrants requesting to speak is greater than can be reasonably accommodated during the scheduled open public hearing session, FDA may conduct a lottery to determine the speakers for the scheduled open public hearing session. The contact person will notify interested persons regarding their request to speak by February 5, 2010.

Persons attending FDA's advisory committee meetings are advised that the agency is not responsible for providing access to electrical outlets.

FDA welcomes the attendance of the public at its advisory committee meetings and will make every effort to accommodate persons with physical disabilities or special needs. If you require special accommodations due to a disability, please contact Elaine Ferguson at least 7 days in advance of the meeting.

FDA is committed to the orderly conduct of its advisory committee meetings. Please visit our Web site at *http://www.fda.gov/AdvisoryCommittees/AboutAdvisoryCommittees/ucm111462.htm* for procedures on public conduct during advisory committee meetings.

Notice of this meeting is given under the Federal Advisory Committee Act (5 U.S.C. app. 2).

Dated: January 5, 2010.

David Dorsey,

Acting Deputy Commissioner for Policy, Planning and Budget.

[FR Doc. 2010–173 Filed 1–8–10; 8:45 am]

BILLING CODE 4160–01–S

DEPARTMENT OF HEALTH AND HUMAN SERVICES

Food and Drug Administration

[Docket No. FDA–2009–N–0664]

The General Hospital and Personal Use Devices Panel of the Medical Devices Advisory Committee; Notice of Meeting

AGENCY: Food and Drug Administration, HHS.

ACTION: Notice.

This notice announces a forthcoming meeting of a public advisory committee of the Food and Drug Administration (FDA). The meeting will be open to the public.

Name of Committee: General Hospital and Personal Use Devices Panel of the Medical Devices Advisory Committee.

General Function of the Committee: To provide advice and recommendations to the agency on FDA's regulatory issues.

Date and Time: The meeting will be held on March 5, 2010, from 8 a.m. to 5 p.m.

Location: Hilton Washington DC North/Gaithersburg, Salons C, D and E, 620 Perry Pkwy., Gaithersburg, MD.

Contact Person: Tracy Phillips, Center for Devices and Radiological Health, Food and Drug Administration, 10903 New Hampshire Ave., Silver Spring, MD 20993, or FDA Advisory Committee Information Line, 1–800–741–8138 (301–443–0572 in the Washington, DC area), code 3014512520. Please call the Information Line for up-to-date information on this meeting. A notice in the **Federal Register** about last minute modifications that impact a previously announced advisory committee meeting cannot always be published quickly enough to provide timely notice. Therefore, you should always check the agency's Web site and call the appropriate advisory committee hot line/phone line to learn about possible modifications before coming to the meeting.

Agenda: On March 5, 2010, the committee will discuss and make recommendations regarding clinical risks and benefits of post-market actions in response to insulin pump failures. Insulin pumps are intended for continuous delivery of insulin at set and variable rates and as an aid in the management of diabetes mellitus in persons requiring insulin.

FDA intends to make background material available to the public no later than 2 business days before the meeting. If FDA is unable to post the background material on its Web site prior to the meeting, the background material will be made publicly available at the location of the advisory committee meeting, and the background material will be posted on FDA's Web site after the meeting. Background material is available at *http://www.fda.gov/AdvisoryCommittees/Calendar/default.htm*. Scroll down to the appropriate advisory committee link.

Procedure: Interested persons may present data, information, or views, orally or in writing, on issues pending before the committee. Written submissions may be made to the contact person on or before February 22, 2010. Oral presentations from the public will be scheduled immediately following

lunch. Those desiring to make formal oral presentations should notify the contact person and submit a brief statement of the general nature of the evidence or arguments they wish to present, the names and addresses of proposed participants, and an indication of the approximate time requested to make their presentation on or before February 11, 2010. Time allotted for each presentation may be limited. If the number of registrants requesting to speak is greater than can be reasonably accommodated during the scheduled open public hearing session, FDA may conduct a lottery to determine the speakers for the scheduled open public hearing session. The contact person will notify interested persons regarding their request to speak by February 12, 2010.

Persons attending FDA's advisory committee meetings are advised that the agency is not responsible for providing access to electrical outlets.

FDA welcomes the attendance of the public at its advisory committee meetings and will make every effort to accommodate persons with physical disabilities or special needs. If you require special accommodations due to a disability, please contact AnnMarie Williams at 301–796–5966 at least 7 days in advance of the meeting.

FDA is committed to the orderly conduct of its advisory committee meetings. Please visit our Web site at *http://www.fda.gov/AdvisoryCommittees/AboutAdvisoryCommittees/ucm111462.htm* for procedures on public conduct during advisory committee meetings.

Notice of this meeting is given under the Federal Advisory Committee Act (5 U.S.C. app. 2).

Dated: January 5, 2010.

David Dorsey,

Acting Deputy Commissioner for Policy, Planning and Budget.

[FR Doc. 2010–174 Filed 1–8–10; 8:45 am]

BILLING CODE 4160–01–S

DEPARTMENT OF HEALTH AND HUMAN SERVICES

Health Resources and Services Administration

National Advisory Council on Migrant Health; Notice of Meeting

In accordance with section 10(a)(2) of the Federal Advisory Committee Act (Pub. L. 92–463), notice is hereby given of the following meeting:

Name: National Advisory Council on Migrant Health.

Dates and Times: February 10, 2010, 8:30 a.m. to 5 p.m., February 11, 2010, 8:30 a.m. to 5 p.m.

Place: Red Lion Hotel on Fifth Avenue, 1415 Fifth Avenue, Seattle, Washington 98101, *Telephone:* 206–971–8000, *Fax:* 206–971–8100.

Status: The meeting will be open to the public.

Purpose: The purpose of the meeting is to discuss services and issues related to the health of migrant and seasonal farmworkers and their families and to formulate recommendations for the Secretary of Health and Human Services.

Agenda: The agenda includes an overview of the Council's general business activities. The Council will also hear presentations from experts on farmworker issues, including the status of farmworker health at the local and national levels.

In addition, the Council will be holding a public hearing at which migrant farmworkers, community leaders, and providers will have the opportunity to testify before the Council regarding matters that affect the health of migrant farmworkers. The hearing is scheduled for Thursday, February 11 from 9 a.m. to 12 p.m., at the Red Lion Hotel on Fifth Avenue.

The Council meeting is being held in conjunction with the Western Migrant Stream Forum sponsored by the Northwest Regional Primary Care Association, which is being held in Seattle, Washington, February 12–14, 2010.

Agenda items are subject to change as priorities indicate.

For Further Information Contact: Gladys Cate, Office of Minority and Special Populations, Bureau of Primary Health Care, Health Resources and Services Administration, 5600 Fishers Lane, Maryland 20857; telephone (301) 594–0367.

Dated: January 5, 2010.

Sahira Rafiullah,

Deputy Director, Division of Policy Review and Coordination.

[FR Doc. 2010–274 Filed 1–8–10; 8:45 am]

BILLING CODE 4165–15–P

DEPARTMENT OF HEALTH AND HUMAN SERVICES

National Institutes of Health

Center for Scientific Review; Notice of Closed Meetings

Pursuant to section 10(d) of the Federal Advisory Committee Act, as amended (5 U.S.C. App.), notice is hereby given of the following meetings.

The meetings will be closed to the public in accordance with the provisions set forth in sections 552b(c)(4) and 552b(c)(6), Title 5 U.S.C., as amended. The grant applications and the discussions could disclose confidential trade secrets or commercial property such as patentable material, and personal information concerning individuals associated with the grant applications, the disclosure of which would constitute a clearly unwarranted invasion of personal privacy.

Name of Committee: Molecular, Cellular and Developmental Neuroscience Integrated Review Group; Molecular Neuropharmacology and Signaling Study Section.

Date: February 4–5, 2010.

Time: 8 a.m. to 5 p.m.

Agenda: To review and evaluate grant applications.

Place: Hotel Monaco, 700 F Street, NW.,Washington, DC 20001.

Contact Person: Deborah L. Lewis, PhD, Scientific Review Officer, Center for Scientific Review, National Institutes of Health, 6701 Rockledge Drive, Room 4183, MSC 7850, Bethesda, MD 20892, 301–408–9129, *lewisdeb@csr.nih.gov*.

Name of Committee: Center for Scientific Review Special Emphasis Panel; Member Conflict: Population Sciences and Epidemiology.

Date: February 10, 2010.

Time: 8 a.m. to 5 p.m.

Agenda: To review and evaluate grant applications.

Place: National Institutes of Health, 6701 Rockledge Drive, Bethesda, MD 20892 (Virtual Meeting).

Contact Person: Fungai Chanetsa, MPH, PhD, Scientific Review Officer, Center for Scientific Review, National Institutes of Health, 6701 Rockledge Drive, Room 3135, MSC 7770, Bethesda, MD 20892, 301–408–9436, *fungai.chanetsa@nih.hhs.gov*.

Name of Committee: Center for Scientific Review Special Emphasis Panel; Muscle Physiology and Diseases.

Date: February 10, 2010.

Time: 11 a.m. to 4 p.m.

Agenda: To review and evaluate grant applications.

Place: National Institutes of Health, 6701 Rockledge Drive, Bethesda, MD 20892 (Telephone Conference Call).

Contact Person: Yi-Hsin Liu, PhD, Scientific Review Officer, Center for Scientific Review, National Institutes of Health, 6701 Rockledge Drive, Room 4214, MSC 7814, Bethesda, MD 20892, 301–451–1327, *liuyh@csr.nih.gov*.

Name of Committee: Center for Scientific Review Special Emphasis Panel; PAR09–224: System Dynamics Methodologies.

Date: February 10, 2010.

Time: 1 p.m. to 4 p.m.

Agenda: To review and evaluate grant applications.

Place: National Institutes of Health, 6701 Rockledge Drive, Bethesda, MD 20892 (Virtual Meeting).

Contact Person: Delia Olufokunbi Sam, PhD, Scientific Review Officer, Center for Scientific Review, National Institutes of Health, 6701 Rockledge Drive, Room 3158, MSC 7770, Bethesda, MD 20892, 301–435–0695, *olufokunbisamd@csr.nih.gov*.

Name of Committee: Surgical Sciences, Biomedical Imaging and Bioengineering Integrated Review Group; Medical Imaging Study Section.

Date: February 10–11, 2010.
Time: 7 p.m. to 5 p.m.
Agenda: To review and evaluate grant applications.
Place: Bahia Resort Hotel, 998 West Mission Bay Drive, San Diego, CA 92109.
Contact Person: Xiang-Ning Li, MD, PhD, Scientific Review Officer, Center for Scientific Review, National Institutes of Health, 6701 Rockledge Drive, Room 5112, MSC 7854, Bethesda, MD 20892, 301–435–1744, *lixiang@csr.nih.gov*.

Name of Committee: Bioengineering Sciences & Technologies Integrated Review Group; Biodata Management and Analysis Study Section.
Date: February 11–12, 2010.
Time: 8 a.m. to 4:30 p.m.
Agenda: To review and evaluate grant applications.
Place: Latham Hotel, 3000 M Street, NW., Washington, DC 20007.
Contact Person: Mark Caprara, PhD, Scientific Review Officer, Center for Scientific Review, National Institutes of Health, 6701 Rockledge Drive, Room 5156, MSC 7844, Bethesda, MD 20892, 301–435–1042, *capraramg@mail.nih.gov*.

Name of Committee: Bioengineering Sciences & Technologies Integrated Review Group; Modeling and Analysis of Biological Systems Study Section.
Date: February 11–12, 2010.
Time: 8 a.m. to 4 p.m.
Agenda: To review and evaluate grant applications.
Place: Churchill Hotel, 1914 Connecticut Avenue, NW., Washington, DC 20009.
Contact Person: Malgorzata Klosek, PhD, Scientific Review Officer, Center for Scientific Review, National Institutes of Health, 6701 Rockledge Drive, Room 4188, MSC 7849, Bethesda, MD 20892, (301) 435 -2211, *klosekm@mail.nih.gov*.

Name of Committee: Digestive, Kidney and Urological Systems Integrated Review Group; Pathobiology of Kidney Disease Study Section.
Date: February 11–12, 2010.
Time: 8 a.m. to 4:30 p.m.
Agenda: To review and evaluate grant applications.
Place: Hyatt Regency Bethesda, One Bethesda Metro Center, 7400 Wisconsin Avenue, Bethesda, MD 20814.
Contact Person: Mushtaq A. Khan, DVM, PhD, Scientific Review Officer, Center for Scientific Review, National Institutes of Health, 6701 Rockledge Drive, Room 2176, MSC 7818, Bethesda, MD 20892, 301–435–1778, *khanm@csr.nih.gov*.

Name of Committee: Risk, Prevention and Health Behavior Integrated Review Group; Risk, Prevention and Intervention for Addictions Study Section.
Date: February 11–12, 2010.
Time: 8 a.m. to 5 p.m.
Agenda: To review and evaluate grant applications.
Place: Renaissance Mayflower Hotel, 1127 Connecticut Avenue, NW., Washington, DC 20036.
Contact Person: Gabriel B. Fosu, PhD, Scientific Review Officer, Center for Scientific Review, National Institutes of Health, 6701 Rocklege Drive, Room 3108 MSC 7808, Bethesda, MD 20892, (301) 435–3562, *fosug@csr.nih.gov*.

Name of Committee: Population Sciences and Epidemiology Integrated Review Group; Cardiovascular and Sleep Epidemiology Study Section.
Date: February 11–12, 2010.
Time: 8 a.m. to 5 p.m.
Agenda: To review and evaluate grant applications.
Place: Bethesda Marriott Pooks Hill, 5151 Pooks Hill Road, Bethesda, MD 20814.
Contact Person: J. Scott Osborne, PhD, MPH, Scientific Review Officer, Center for Scientific Review, National Institutes of Health, 6701 Rockledge Drive, Room 4114, MSC 7816, Bethesda, MD 20892, (301) 435–1782, *osbornes@csr.nih.gov*.

Name of Committee: Genes, Genomes, and Genetics Integrated Review Group; Prokaryotic Cell and Molecular Biology Study Section.
Date: February 11–12, 2010.
Time: 8 a.m. to 5 p.m.
Agenda: To review and evaluate grant applications.
Place: Hilton San Francisco Fisherman's Wharf, 2620 Jones Street, San Francisco, CA 94133.
Contact Person: Diane L. Stassi, PhD, Scientific Review Officer, Center for Scientific Review, National Institutes of Health, 6701 Rockledge Drive, Room 3202, MSC 7808, Bethesda, MD 20892, 301–435–2514, *stassid@csr.nih.gov*.

Name of Committee: Population Sciences and Epidemiology Integrated Review Group; Social Sciences and Population Studies Study Section.
Date: February 11, 2010.
Time: 8 a.m. to 5 p.m.
Agenda: To review and evaluate grant applications.
Place: Pier 5 Hotel, 711 Eastern Avenue, Baltimore, MD 21202.
Contact Person: Bob Weller, PhD, Scientific Review Officer, Center for Scientific Review, National Institutes of Health, 6701 Rockledge Drive, Room 3160, MSC 7770, Bethesda, MD 20892, (301) 435–0694, *wellerr@csr.nih.gov*.

Name of Committee: Cell Biology Integrated Review Group; Intercellular Interactions Study Section.
Date: February 11–12, 2010.
Time: 8 a.m. to 5 p.m.
Agenda: To review and evaluate grant applications.
Place: Sheraton Fisherman's Wharf Hotel, 2500 Mason Street, San Francisco, CA 94133.
Contact Person: David Balasundaram, PhD, Scientific Review Officer, Center for Scientific Review, National Institutes of Health, 6701 Rockledge Drive, Room 5189, MSC 7840, Bethesda, MD 20892, 301–435–1022, *balasundaramd@csr.nih.gov*.

Name of Committee: Immunology Integrated Review Group; Innate Immunity and Inflammation Study Section.
Date: February 11–12, 2010.
Time: 8 a.m. to 5 p.m.
Agenda: To review and evaluate grant applications.
Place: Hilton Alexandria Old Town, 1767 King Street, Alexandria, VA 22314.
Contact Person: Tina McIntyre, PhD, Scientific Review Officer, Center for Scientific Review, National Institutes of Health, 6701 Rockledge Drive, Room 4202, MSC 7812, Bethesda, MD 20892, 301–594–6375, *mcintyrt@csr.nih.gov*.

Name of Committee: Infectious Diseases and Microbiology Integrated Review Group; Vector Biology Study Section.
Date: February 11, 2010.
Time: 8 a.m. to 6 p.m.
Agenda: To review and evaluate grant applications.
Place: The Fairmont Hotel San Francisco, 950 Mason Street, Hunt Room, San Francisco, CA 94108.
Contact Person: Liangbiao Zheng, PhD, Scientific Review Officer, Center for Scientific Review, National Institutes of Health, 6701 Rockledge Drive, Room 3214, MSC 7808, Bethesda, MD 20892, 301–402–5671, *zhengli@csr.nih.gov*.

Name of Committee: Cardiovascular and Respiratory Sciences Integrated Review Group; Clinical and Integrative Cardiovascular Sciences Study Section.
Date: February 11–12, 2010.
Time: 8 a.m. to 5 p.m.
Agenda: To review and evaluate grant applications.
Place: St. Gregory Hotel, 2033 M Street, NW., Washington, DC 20036.
Contact Person: Russell T. Dowell, PhD, Scientific Review Officer, Center for Scientific Review, National Institutes of Health, 6701 Rockledge Drive, Room 4128, MSC 7814, Bethesda, MD 20892, (301) 435–1850, *dowellr@csr.nih.gov*.

Name of Committee: Biology of Development and Aging Integrated Review Group; Cellular Mechanisms in Aging and Development Study Section.
Date: February 11–12, 2010.
Time: 8 a.m. to 5 p.m.
Agenda: To review and evaluate grant applications.
Place: Hyatt Regency Bethesda, One Bethesda Metro Center, 7400 Wisconsin Avenue, Bethesda, MD 20814.
Contact Person: John Burch, PhD, Scientific Review Officer, Center for Scientific Review, National Institute of Health, 6701 Rockledge Drive, Room 3213, MSC 7808, Bethesda, MD 20892, 301–435–1019, *burchjb@csr.nih.gov*.

Name of Committee: Cell Biology Integrated Review Group; Membrane Biology and Protein Processing Study Section.
Date: February 11–12, 2010.
Time: 8 a.m. to 5 p.m.
Agenda: To review and evaluate grant applications.
Place: The Fairmont Hotel Washington, DC, 2401 M Street, NW., Washington, DC 20037.
Contact Person: Janet M. Larkin, PhD, Scientific Review Officer, Center for Scientific Review, National Institutes of Health, 6701 Rockledge Drive, Room 5142, MSC 7840, Bethesda, MD 20892, 301–806–2765, *larkinja@csr.nih.gov*.

Name of Committee: Cell Biology Integrated Review Group; Biology and Diseases of the Posterior Eye Study Section.
Date: February 11–12, 2010.

Time: 8 a.m. to 5:30 p.m.
Agenda: To review and evaluate grant applications.
Place: Hyatt Regency Bethesda, One Bethesda Metro Center, 7400 Wisconsin Avenue, Bethesda, MD 20814.
Contact Person: Michael H. Chaitin, PhD, Scientific Review Officer, Center for Scientific Review, National Institutes of Health, 6701 Rockledge Drive, Room 5202, MSC 7850, Bethesda, MD 20892, (301) 435–0910, *chaitinm@csr.nih.gov*.

Name of Committee: Cardiovascular and Respiratory Sciences Integrated Review Group; Cardiovascular Differentiation and Development Study Section.
Date: February 11–12, 2010.
Time: 8 a.m. to 5 p.m.
Agenda: To review and evaluate grant applications.
Place: Bahia Resort Hotel, 998 West Mission Bay Drive, San Diego, CA 92109.
Contact Person: Maqsood A. Wani, PhD, DVM, Scientific Review Officer, Center for Scientific Review, National Institutes of Health, 6701 Rockledge Drive, Room 4136, MSC 7814, Bethesda, MD 20892, 301–435–2270, *wanimaqs@csr.nih.gov*.

Name of Committee: Biobehavioral and Behavioral Processes Integrated Review Group; Cognition and Perception Study Section.
Date: February 11–12, 2010.
Time: 8:30 AM to 6 p.m.
Agenda: To review and evaluate grant applications.
Place: The Fairmont Hotel San Francisco, 950 Mason Street, San Francisco, CA 94108.
Contact Person: Cheri Wiggs, PhD., Scientific Review Officer, Center for Scientific Review, National Institutes of Health, 6701 Rockledge Drive, Room 3180, MSC 7848, Bethesda, MD 20892, (301) 435–1261, *wiggsc@csr.nih.gov*.

Name of Committee: Infectious Diseases and Microbiology Integrated Review Group; Virology—A Study Section.
Date: February 11–12, 2010.
Time: 8:30 AM to 5 p.m.
Agenda: To review and evaluate grant applications.
Place: Baltimore Marriott Waterfront Hotel, 700 Aliceanna Street, Baltimore, MD 21202.
Contact Person: Joanna M. Pyper, PhD, Scientific Review Officer, Center for Scientific Review, National Institutes of Health, 6701 Rockledge Drive, Room 3198, MSC 7808, Bethesda, MD 20892, (301) 435–1151, *pyperj@csr.nih.gov*.
Name of Committee: Healthcare Delivery and Methodologies Community Influences on Health Behavior.
Date: February 11–12, 2010.
Time: 8:30 a.m. to 6 p.m.
Agenda: To review and evaluate grant applications.
Place: The Fairmont Hotel, 2401 M Street, NW., Washington, DC 20037.
Contact Person: Ellen K. Schwartz, EDD, Scientific Review Officer, Center for Scientific Review, National Institutes of Health, 6701 Rockledge Drive, Room 3168, MSC 7770, Bethesda, MD 20892, 301–435–0681, *schwarte@csr.nih.gov*.

Name of Committee: Biobehavioral and Behavioral Processes Integrated Review Group; Biobehavioral Regulation, Learning and Ethology Study Section.
Date: February 11–12, 2010.
Time: 9 a.m. to 5 p.m.
Agenda: To review and evaluate grant applications.
Place: Hotel Monaco, 501 Geary Street at Taylor, San Francisco, CA 94102.
Contact Person: Melissa Gerald, PhD, Scientific Review Officer, Center for Scientific Review, National Institutes of Health, 6701 Rockledge Drive, Room 3172, MSC 7848, Bethesda, MD 20892, (301) 408–9107, *geraldmel@csr.nih.gov*.

Name of Committee: Genes, Genomes, and Genetics Integrated Review Group; Therapeutic Approaches to Genetic Diseases.
Date: February 11–12, 2010.
Time: 9 a.m. to 6 p.m.
Agenda: To review and evaluate grant applications.
Place: National Institutes of Health, 6701 Rockledge Drive, Bethesda, MD 20892 (Virtual Meeting).
Contact Person: Michael K. Schmidt, PhD, Scientific Review Officer, Center for Scientific Review, National Institutes of Health, 6701 Rockledge Drive, Room 2214, MSC 7890, Bethesda, MD 20892, (301) 435–1147, *mschmidt@mail.nih.gov*.

Name of Committee: Surgical Sciences, Biomedical Imaging and Bioengineering Integrated Review Group; Clinical Molecular Imaging and Probe Development.
Date: February 11–12, 2010.
Time: 7 p.m. to 4 p.m.
Agenda: To review and evaluate grant applications.
Place: Bahia Resort Hotel, 998 West Mission Bay Drive, San Diego, CA 92109.
Contact Person: Eileen W. Bradley, DSC, Scientific Review Officer, Center for Scientific Review, National Institutes of Health, 6701 Rockledge Drive, Room 5100, MSC 7854, Bethesda, MD 20892, (301) 435–1179, *bradleye@csr.nih.gov*.

Name of Committee: Center for Scientific Review Special Emphasis Panel; Review of PAR A–50.
Date: February 12, 2010.
Time: 1 p.m. to 4 p.m.
Agenda: To review and evaluate grant applications.
Place: Bahia Resort Hotel, 998 West Mission Bay Drive, San Diego, CA 92109.
Contact Person: Eileen W. Bradley, DSC, Scientific Review Officer, Center for Scientific Review, National Institutes of Health, 6701 Rockledge Drive, Room 5100, MSC 7854, Bethesda, MD 20892, (301) 435–1179, *bradleye@csr.nih.gov*.

(Catalogue of Federal Domestic Assistance Program Nos. 93.306, Comparative Medicine; 93.333, Clinical Research, 93.306, 93.333, 93.337, 93.393–93.396, 93.837–93.844, 93.846–93.878, 93.892, 93.893, National Institutes of Health, HHS)

Dated: January 4, 2010.

Jennifer Spaeth,

Director, Office of Federal Advisory Committee Policy.

[FR Doc. 2010–266 Filed 1–8–10; 8:45 am]

BILLING CODE 4140–01–P

DEPARTMENT OF HEALTH AND HUMAN SERVICES

National Institutes of Health

Center for Scientific Review; Notice of Closed Meetings

Pursuant to section 10(d) of the Federal Advisory Committee Act, as amended (5 U.S.C. App.), notice is hereby given of the following meetings.

The meetings will be closed to the public in accordance with the provisions set forth in sections 552b(c)(4) and 552b(c)(6), Title 5 U.S.C., as amended. The grant applications and the discussions could disclose confidential trade secrets or commercial property such as patentable material, and personal information concerning individuals associated with the grant applications, the disclosure of which would constitute a clearly unwarranted invasion of personal privacy.

Name of Committee: Biology of Development and Aging Integrated Review Group, Development—1 Study Section.
Date: February 4–5, 2010.
Time: 8 a.m. to 5 p.m.
Agenda: To review and evaluate grant applications.
Place: Hotel George, 15 E Street, NW., Washington, DC 20001.
Contact Person: Cathy Wedeen, PhD, Scientific Review Officer, Center for Scientific Review, National Institutes of Health, 6701 Rockledge Drive, Room 3213, MSC 7808, Bethesda, MD 20892, 301–435–1191, *wedeenc@csr.nih.gov*.

Name of Committee: Vascular and Hematology Integrated Review Group, Vascular Cell and Molecular Biology Study Section.
Date: February 8–9, 2010.
Time: 8 a.m. to 5 p.m.
Agenda: To review and evaluate grant applications.
Place: Hilton Hotel Rockville, 1750 Rockville Pike, Rockville, MD 20852.
Contact Person: Anshumali Chaudhari, PhD, Scientific Review Officer, Center for Scientific Review, National Institutes of Health, 6701 Rockledge Drive, Room 4124, MSC 7802, Bethesda, MD 20892, (301) 435–1210, *chaudhaa@csr.nih.gov*.

Name of Committee: Brain Disorders and Clinical Neuroscience Integrated Review Group, Acute Neural Injury and Epilepsy Study Section.
Date: February 8, 2010.
Time: 8 a.m. to 5 p.m.
Agenda: To review and evaluate grant applications.
Place: Hotel Nikko San Francisco, 222 Mason Street, San Francisco, CA 24102.
Contact Person: Seetha Bhagavan, PhD, Scientific Review Officer, Center for Scientific Review, National Institutes of Health, 6701 Rockledge Drive, Room 5194, MSC 7846, Bethesda, MD 20892, (301) 237–9838, *bhagavas@csr.nih.gov*.

Name of Committee: Oncology 1–Basic Translational Integrated Review Group, Tumor Cell Biology Study Section.
Date: February 8–9, 2010.
Time: 8 a.m. to 5 p.m.
Agenda: To review and evaluate grant applications.
Place: Embassy Suites at the Chevy Chase Pavilion, 4300 Military Road, NW., Washington, DC 20015.
Contact Person: Angela Y. Ng, PhD, MBA, Scientific Review Officer, Center for Scientific Review, National Institutes of Health, 6701 Rockledge Drive, Room 6200, MSC 7804, (For courier delivery, use MD 20817), Bethesda, MD 20892, 301–435–1715, *nga@csr.nih.gov*.

Name of Committee: Oncology 2—Translational Clinical Integrated Review Group, Drug Discovery and Molecular Pharmacology Study Section.
Date: February 8–9, 2010.
Time: 8 a.m. to 6 p.m.
Agenda: To review and evaluate grant applications.
Place: Nikko Hotel, 222 Mason Street, San Francisco, CA 94102.
Contact Person: Hungyi Shau, PhD, Scientific Review Officer, Center for Scientific Review, National Institutes of Health, 6701 Rockledge Drive, Room 6214, MSC 7804, Bethesda, MD 20892, 301–435–1720, *shauhung@csr.nih.gov*.

Name of Committee: Brain Disorders and Clinical Neuroscience Integrated Review Group, Anterior Eye Disease Study Section.
Date: February 8–9, 2010.
Time: 8 a.m. to 5 p.m.
Agenda: To review and evaluate grant applications.
Place: Bahia Resort Hotel, 998 W. Mission Bay Drive, San Diego, CA 92109.
Contact Person: Jerry L Taylor, PhD, Scientific Review Officer, Center for Scientific Review, National Institutes of Health, 6701 Rockledge Drive, Room 5202, MSC 7846, Bethesda, MD 20892, 301–435–1175, *taylorje@csr.nih.gov*.

Name of Committee: Biobehavioral and Behavioral Processes Integrated Review Group, Motor Function, Speech and Rehabilitation Study Section.
Date: February 8, 2010.
Time: 8 a.m. to 6 p.m.
Agenda: To review and evaluate grant applications.
Place: The Fairmont San Francisco, 950 Mason Street, San Francisco, CA 94108.
Contact Person: Biao Tian, PhD, Scientific Review Officer, Center for Scientific Review, National Institutes of Health, 6701 Rockledge Drive, Room 3166, MSC 7848, Bethesda, MD 20892, 301–402–4411, *tianbi@csr.nih.gov*.

Name of Committee: Musculoskeletal, Oral and Skin Sciences Integrated Review Group, Skeletal Biology Structure and Regeneration Study Section.
Date: February 8–9, 2010.
Time: 8 a.m. to 5 p.m.
Agenda: To review and evaluate grant applications.
Place: Sheraton Delfina Santa Monica Hotel, 530 West Pico Boulevard, Santa Monica, CA 90405.
Contact Person: Daniel F. McDonald, PhD, Scientific Review Officer, Center for Scientific Review, National Institutes of Health, 6701 Rockledge Drive, Room 4110, MSC 7814, Bethesda, MD 20892, (301) 435–1215, *mcdonald@csr.nih.gov*.

Name of Committee: Biology of Development and Aging Integrated Review Group, Aging Systems and Geriatrics Study Section.
Date: February 8–9, 2010.
Time: 8 a.m. to 5 p.m.
Agenda: To review and evaluate grant applications.
Place: Sheraton Delfina Hotel, 530 Pico Blvd., Santa Monica, CA 90405.
Contact Person: James P. Harwood, PhD, Scientific Review Officer, Center for Scientific Review, National Institutes of Health, 6701 Rockledge Drive, Room 5168, MSC 7840, Bethesda, MD 20892, 301–435–1256, *harwoodj@csr.nih.gov*.

Name of Committee: Endocrinology, Metabolism, Nutrition and Reproductive Sciences Integrated Review Group, Molecular and Cellular Endocrinology Study Section.
Date: February 8, 2010.
Time: 8 a.m. to 5 p.m.
Agenda: To review and evaluate grant applications.
Place: Ramada Inn Rockville, 1775 Rockville Pike, Rockville, MD 20852.
Contact Person: David Weinberg, PhD, Scientific Review Officer, Center for Scientific Review, National Institutes of Health, 6701 Rockledge Drive, Room 6170, Bethesda, MD 20892, 301–435–1044, *David.Weinberg@nih.gov*.

Name of Committee: Genes, Genomes, and Genetics Integrated Review Group, Genetics of Health and Disease Study Section.
Date: February 8–9, 2010.
Time: 8 a.m. to 5 p.m.
Agenda: To review and evaluate grant applications.
Place: Hyatt Regency Bethesda, One Bethesda Metro Center, 7400 Wisconsin Avenue, Bethesda, MD 20814.
Contact Person: Cheryl M. Corsaro, PhD, Scientific Review Officer, Center for Scientific Review, National Institutes of Health, 6701 Rockledge Drive, Room 2204, MSC 7890, Bethesda, MD 20892, (301) 435–1045, *corsaroc@csr.nih.gov*.

Name of Committee: Endocrinology, Metabolism, Nutrition and Reproductive Sciences Integrated Review Group, Integrative and Clinical Endocrinology and Reproduction Study Section.
Date: February 8–9, 2010.
Time: 8 a.m. to 4:30 p.m.
Agenda: To review and evaluate grant applications.
Place: Hyatt Regency Bethesda, One Bethesda Metro Center, 7400 Wisconsin Avenue, Bethesda, MD 20814.
Contact Person: Syed M. Amir, PhD, Scientific Review Officer, Center for Scientific Review, National Institutes of Health, 6701 Rockledge Drive, Room 6172, MSC 7892, Bethesda, MD 20892, 301–435–1043, *amirs@csr.nih.gov*.

Name of Committee: Genes, Genomes, and Genetics Integrated Review Group, Molecular Genetics A Study Section.
Date: February 8–9, 2010.
Time: 8 a.m. to 5 p.m.
Agenda: To review and evaluate grant applications.
Place: Renaissance M Street Hotel, 1143 New Hampshire Avenue, NW., Washington, DC 20037.
Contact Person: Michael M. Sveda, PhD, Scientific Review Officer, Center for Scientific Review, National Institutes of Health, 6701 Rockledge Drive, Room 1114, MSC 7890, Bethesda, MD 20892, 301–435–3565, *svedam@csr.nih.gov*.

Name of Committee: Brain Disorders and Clinical Neuroscience Integrated Review Group, Brain Injury and Neurovascular Pathologies Study Section.
Date: February 8–9, 2010.
Time: 8 a.m. to 5 p.m.
Agenda: To review and evaluate grant applications.
Place: Bahia Resort Hotel, 998 West Mission Bay Drive, San Diego, CA 92109.
Contact Person: Alexander Yakovlev, PhD, Scientific Review Officer, Center for Scientific Review, National Institutes of Health, 6701 Rockledge Drive, Room 5206, MSC 7846, Bethesda, MD 20892, 301–435–1254, *yakovleva@csr.nih.gov*.

Name of Committee: Vascular and Hematology Integrated Review Group, Atherosclerosis and Inflammation of the Cardiovascular System Study Section.
Date: February 8–9, 2010.
Time: 8 a.m. to 5 p.m.
Agenda: To review and evaluate grant applications.
Place: Bahia Resort Hotel, 998 W. Mission Bay Drive, San Diego, CA 92109.
Contact Person: Larry Pinkus, PhD, Scientific Review Officer, Center for Scientific Review, National Institutes of Health, 6701 Rockledge Drive, Room 4132, MSC 7802, Bethesda, MD 20892, (301) 435–1214, *pinkusl@csr.nih.gov*.

Name of Committee: Population Sciences and Epidemiology Integrated Review Group, Behavioral Genetics and Epidemiology Study Section.
Date: February 9, 2010.
Time: 8 a.m. to 5 p.m.
Agenda: To review and evaluate grant applications.
Place: St. Gregory Hotel, 2033 M Street, NW., Washington, DC 20036.
Contact Person: Elisabeth Koss, PhD, Scientific Review Officer, Center for Scientific Review, National Institutes of Health, 6701 Rockledge Drive, Room 3152, MSC 7770, Bethesda, MD 20892, (301) 435–1721, *kosse@csr.nih.gov*.

Name of Committee: Vascular and Hematology Integrated Review Group, Hematopoiesis Study Section.
Date: February 9–10, 2010.
Time: 8 a.m. to 4 p.m..
Agenda: To review and evaluate grant applications.
Place: Hyatt Regency Bethesda, One Bethesda Metro Center, 7400 Wisconsin Avenue, Bethesda, MD 20814.
Contact Person: Manjit Hanspal, PhD, Scientific Review Officer, Center for Scientific Review, National Institutes of Health, 6701 Rockledge Drive, Room 4138, MSC 7804, Bethesda, MD 20892, 301–435–1195, *hanspalm@csr.nih.gov*.

Name of Committee: Biological Chemistry and Macromolecular Biophysics Integrated Review Group, Synthetic and Biological Chemistry B Study Section.

Date: February 9–10, 2010.

Time: 8:30 a.m. to 5 p.m.

Agenda: To review and evaluate grant applications.

Place: The Dupont Hotel, 1500 New Hampshire Ave. NW., Washington, DC 20036.

Contact Person: Kathryn M. Koeller, PhD, Scientific Review Officer, Center for Scientific Review, National Institutes of Health, 6701 Rockledge Drive, Room 4166, MSC 7806, Bethesda, MD 20892, 301–435–2681, *koellerk@csr.nih.gov*.

Name of Committee: Biology of Development and Aging Integrated Review Group, International and Cooperative Projects—1 Study Section.

Date: February 10–11, 2010.

Time: 8 a.m. to 5 p.m.

Agenda: To review and evaluate grant applications.

Place: Mandarin Oriental Hotel, 1330 Maryland Ave., SW., Washington, DC 20024.

Contact Person: Dan D. Gerendasy, PhD, Scientific Review Officer, Center for Scientific Review, National Institutes of Health, 6701 Rockledge Drive, Room 5132, MSC 7843, Bethesda, MD 20892, 301–594–6830, *gerendad@csr.nih.gov*.

(Catalogue of Federal Domestic Assistance Program Nos. 93.306, Comparative Medicine; 93.333, Clinical Research, 93.306, 93.333, 93.337, 93.393–93.396, 93.837–93.844, 93.846–93.878, 93.892, 93.893, National Institutes of Health, HHS)

Dated: January 5, 2009

Jennifer Spaeth,

Director, Office of Federal Advisory Committee Policy.

[FR Doc. 2010–265 Filed 1–8–10; 8:45 am]

BILLING CODE 4140–01–P

DEPARTMENT OF HOUSING AND URBAN DEVELOPMENT

[Docket No. FR–5374–N–04]

Buy American Exceptions Under the American Recovery and Reinvestment Act of 2009

AGENCY: Office of the Assistant Secretary for Public and Indian Housing, HUD.

ACTION: Notice.

SUMMARY: In accordance with the American Recovery and Reinvestment Act of 2009 (Pub. L. 111–05, approved February 17, 2009) (Recovery Act), and implementing guidance of the Office of Management and Budget (OMB), this notice advises that an individual exception to the Buy American requirement of the Recovery Act have been determined applicable for work using Capital Fund Recovery Formula and Competition (CFRFC) grant funds. Specifically, a waiver was granted to the Wilkes-Barre Housing Authority for the purchase and installation of tank-less water heaters in the Mineral Springs Village and Boulevard Town Homes.

FOR FURTHER INFORMATION CONTACT: Dominique G. Blom, Deputy Assistant Secretary for Public Housing Investments, Office of Public Housing Investments, Office of Public and Indian Housing, Department of Housing and Urban Development, 451 7th Street, SW., Room 4210, Washington, DC 20410–4000, telephone number 202–402–8500 (this is not a toll-free number). Persons with hearing- or speech-impairments may access this number through TTY by calling the toll-free Federal Information Relay Service at 800–877–8339.

SUPPLEMENTARY INFORMATION: Subsection 1605(a) of the Recovery Act imposes a "Buy American" requirement on Recovery Act funds that, unless all of the iron, steel, and manufactured goods used in the project are produced in the United States, the funds may not be used for a project for the construction, alteration, maintenance, or repair of a public building or public work. Subsection 1605(b) provides that the Buy American requirement shall not apply in any case or category in which the head of a Federal department or agency finds that: (1) Applying the Buy American requirement would be inconsistent with the public interest; (2) iron, steel, and the relevant manufactured goods are not produced in the U.S. in sufficient and reasonably available quantities or of satisfactory quality, or (3) inclusion of iron, steel, and manufactured goods will increase the cost of the overall project by more than 25 percent. Subsection 1605(c) provides that if the head of a Federal department or agency makes a determination that it is necessary to waive subsection 1605(a) pursuant to subsection 1605(b), the head of the department or agency shall publish a detailed written justification in the **Federal Register.**

In accordance with subsection 1605(c) of the Recovery Act and OMB's implementing guidance published on April 23, 2009 (74 FR 18449), this notice advises the public that, on December 21, 2009, upon request of the Wilkes-Barre Housing Authority, HUD granted an exception under subsection 1605(b) with respect to work using CFRFC grant funds, based on the fact that the relevant manufactured goods (tank-less water heaters) are not produced in the U.S. in sufficient and reasonably available quantities or of satisfactory quality.

Dated: December 29, 2009.

Sandra B. Henriquez,

Assistant Secretary for Public and Indian Housing.

[FR Doc. 2010–284 Filed 1–8–10; 8:45 am]

BILLING CODE 4210–67–P

DEPARTMENT OF HOUSING AND URBAN DEVELOPMENT

[Docket No. FR–5366–N–01]

Notice of Intent To Prepare a Draft Environmental Impact Statement for the Baldwin Hills Crenshaw Plaza Redevelopment Project

AGENCY: Office of the Assistant Secretary for Community Planning and Development, HUD.

ACTION: Notice.

SUMMARY: The Department of Housing and Urban Development (HUD) gives notice to the public, agencies, and Indian tribes that the Community Redevelopment Agency of the City of Los Angeles and City of Los Angeles, Community Development Department intend to prepare an Environmental Impact Report/Environmental Impact Statement (EIR/EIS) for the Baldwin Hills Crenshaw Plaza Redevelopment Project located in the City of Los Angeles, Los Angeles County, CA. The City of Los Angeles, Community Development Department, and the Community Redevelopment Agency of the City of Los Angeles acting jointly as the lead agencies will prepare the EIR/EIS acting under the authority of the City of Los Angeles as the responsible entity for compliance with the National Environmental Policy Act (NEPA) in accordance with 42 U.S.C. 5304(g) and 42 U.S.C. 12838 and HUD regulations at 24 CFR 58.4, and under their authority as lead agency in accordance with the California Environmental Quality Act (CEQA). The EIR/EIS will be a joint NEPA and CEQA document. The EIR will satisfy requirements of CEQA (Public Resources Code 21000 *et seq.*) and the State CEQA Guidelines (14 California Code of Regulations 15000 *et seq.*), which require that all state and local government agencies consider the environmental consequences of projects over which they have discretionary authority before acting on those projects. The proposed action is subject to compliance with NEPA, because Economic Development Initiative (EDI) and accompanying Section 108 Loans, Community Development Block Grants (CDBG), Urban Development Assistance Grant (UDAG), Neighborhood Stabilization Program, and HOME Funds would be used for the

development. In addition, the developer may also apply for federal Recovery Zone Bonds (Recovery Zone Facility Bonds [RZFD], Recovery Zone Economic Development Bonds [RZEDB]), New Market Tax Credits (NMTC), and Federal Historic Preservation Tax Incentives. This notice is given in accordance with the Council on Environmental Quality regulations at 40 CFR parts 1500–1508. All interested federal, state, and local agencies, Indian tribes, groups, and the public are invited to comment on the scope of the EIS. If you are an agency with jurisdiction by law over natural or other public resources affected by the project, the Community Redevelopment Agency of the City of Los Angeles and City of Los Angeles, Community Development Department needs to know what environmental information germane to your statutory responsibilities should be included in the EIR/EIS.

ADDRESSES: Comments relating to the scope of the EIS are requested and will be accepted by the contact persons listed below until February 10, 2010. Any person or agency interested in receiving a notice and wishing to make comment on the draft EIS should contact the persons listed below.

FOR FURTHER INFORMATION CONTACT: Dr. Robert Manford, Community Redevelopment Agency of the City of Los Angeles, (p) 213–977–1912, (f) 213–687–9546, *rmanford@cra.lacity.org* (CEQA) and Mr. Tony Kochinas, City of Los Angeles, Community Development Department, (p) 213–744–7384, (f) 213–744–9038, *tony.kochinas@lacity.org* (NEPA).

Public Participation: The public will be invited to participate in the review of the Draft EIR/EIS. Release of the Draft EIR/EIS will be announced through public mailings as well as the local news media.

SUPPLEMENTARY INFORMATION:

Project Name and Description

The Community Redevelopment Agency of the City of Los Angeles and City of Los Angeles, Community Development Department will consider a proposal to redevelop the Baldwin Hills Crenshaw Plaza to include a mixed-use retail/commercial/office/hotel and residential project totaling up to approximately 3,435,726 square feet of development. The project site is 42.42-acres in size and is located on the Hollywood 7.5-minute U.S.G.S topographic quadrangle map, at 3650 West Martin Luther King Boulevard in Los Angeles, California. The site is relatively flat and currently developed with an existing retail center. The site is bordered on the north by West 39th Street, on the east by Crenshaw Boulevard, on the southeast by Stocker Street, on the southwest by Santa Rosalita Drive, and on the west by Marlton Avenue. The site is bisected by Martin Luther King Jr. Boulevard.

The project site is surrounded by a mix of urban land uses. Existing commercial uses are located to the north of 39th Street. Land uses along Crenshaw Boulevard between 39th Street and Martin Luther King Jr. Boulevard include two-story multi-family residential units, single-story commercial buildings, and surface parking. Uses along Crenshaw Boulevard between Martin Luther King Jr. Boulevard and Stocker Street include single-story commercial uses and associated surface parking. Land uses along Stocker Street include commercial and multi-family uses. Uses to the west along Marlton Avenue between Santa Rosalita and Martin Luther King Jr. Boulevard include a senior housing complex and the location of the proposed Santa Barbara Plaza (also known as "Marlton Square") Redevelopment Site, while land uses along Marlton Avenue between Martin Luther King Jr. Boulevard and 39th Street consists of four-story multi-family buildings above parking garages.

The project would require the following discretionary approvals:

- Tentative Map to subdivide the Project Site and approve any condominiums.
- Conditional Use Permit (CUP) to approve a hotel within 500 feet of an R-zone.
- CUP to approve floor area averaging for a unified development.
- CUP for new alcoholic beverage uses.
- Zone Variances to address density, floor area, building height, setback, open space, parking, and other design issues.
- Site Plan Review.
- Sign District Permissible Display Area to exceed the normal sign area limits for the Project Site.

This is to be a combined document—EIR (Environmental Impact Report) under the State of California California Environmental Quality Act (Public Resources Code 21000 *et seq.* and 14 California Code of Regulations 15000 *et seq.*) and EIS (Environmental Impact Statement) under NEPA (42 U.S.C. 4321) and implementing regulations of the Council on Environmental Quality (40 CFR parts 1500–1508) and HUD (24 CFR Part 58).

The project proposes the demolition of approximately 257,000 square feet of the existing mall structures. Portions of the enclosed mall would be retained and rehabilitated. New buildings would also be constructed to increase the amount of retail and commercial services at the site and to provide new uses to the area such as an office building, a hotel with meeting rooms, and residential units available for purchase and rent. The pedestrian bridge over Martin Luther King Jr. Boulevard would be retained to allow continued operation as a single connected facility. The project would develop four anchor retail stores including an automotive center (totaling approximately 535,000 square feet), two grocery stores (totaling approximately 85,000 square feet), restaurants (both in mall and as stand-alone restaurants totaling approximately 156,000 square feet), a movie theater (3,100 seats), bowling alley and bars (totaling approximately 40,000 square feet), dance studio and fitness uses (totaling 70,000 square feet), office uses (150,000 square feet), a 400-room hotel with meeting rooms and two restaurants, and 551 condominium units, and 410 apartment units.

Alternatives to the Proposed Action

There are four alternatives to the proposed action to be analyzed in the EIR/EIS: Reduced Density Alternative 1, Reduced Density Alternative 2, Reduced Density Alternative 3, and the No Project Alternative. Except for the No Project Alternative, all the alternatives are reduced density variations of the proposed project.

Reduced Density Alternative 1

The Reduced Density Alternative 1 would develop the same type and range of land uses as proposed for the project including anchor retail, grocery stores, restaurants, entertainment and fitness uses, hotel, and residential uses. However, the Reduced Density Alternative 1 proposes the development of up to 3,071,325 square feet at the project site. The Reduced Density Alternative 1 would provide a net increase of approximately 2,073,717 square feet of development compared to the existing uses. Reduced Density Alternative 1 would develop four anchor retail stores including an automotive center (totaling approximately 387,000 square feet), two grocery stores (totaling approximately 85,000 square feet), restaurants (both in mall and as standalone restaurants totaling approximately 126,000 square feet), a movie theater (2,600 seats), bowling alley and bars (totaling approximately 35,000 square feet), dance studio and fitness uses (totaling 70,000 square feet), office uses (148,000

square feet), a 400-room hotel with meeting rooms and two restaurants, and 551 condominium units, and 410 apartment units.

Reduced Density Alternative 2

The Reduced Density Alternative 2 would develop the same type and range of land uses as proposed for the project including anchor retail, grocery stores, restaurants, entertainment and fitness uses, hotel, and residential uses. However, the Reduced Density Alternative 2 would involve the development of up to 2,980,726 square feet at the project site. The Reduced Density Alternative 2 would provide a net increase of approximately 1,983,117 square feet of development compared to the existing uses. Reduced Density Alternative 2 would develop four anchor retail stores including an automotive center (totaling approximately 387,000 square feet), two grocery stores (totaling approximately 85,000 square feet), restaurants (both in mall and as standalone restaurants totaling approximately 90,000 square feet), a movie theater (2,600 seats), bowling alley and bars (totaling approximately 35,000 square feet), dance studio and fitness uses (totaling 70,000 square feet), office uses (108,000 square feet), a 400-room hotel with meeting rooms and two restaurants, and 551 condominium units, and 410 apartment units.

Reduced Density Alternative 3

The Reduced Density Alternative 3 would develop the same type and range of land uses as proposed for the project including anchor retail, grocery stores, restaurants, entertainment and fitness uses, hotel, and residential uses. However, the Reduced Density Alternative 3 would involve the development of up to 2,897,726 square feet at the project site. The Reduced Density Alternative 3 would provide a net increase of approximately 1,900,117 square feet of development compared to the existing uses. Reduced Density Alternative 3 would develop four anchor retail stores including an automotive center (totaling approximately 387,000 square feet), two grocery stores (totaling approximately 85,000 square feet), restaurants (both in mall and as standalone restaurants totaling approximately 80,000 square feet), a movie theater (2,600 seats), bowling alley and bars (totaling approximately 25,000 square feet), dance studio and fitness uses (totaling 55,000 square feet), office uses (75,000 square feet), a 400-room hotel with meeting rooms and two restaurants, and 551 condominium units, and 410 apartment units.

No Project Alternative

The No Project Alternative would analyze the "no action" alternative, which would be the continuation of uses on the site; therefore, existing buildings and tenants would remain at the project site and no new buildings or uses would be constructed.

Probable Environmental Effects

The following subject areas will be analyzed in the combined EIR/EIS for probable environmental effects: Aesthetics (views/light and glare, and shade/shadow), Air Quality (Construction and Operational), Cultural/Historic Resources, Geology/Soils, Hydrology/Water Quality, Land Use and Planning, Noise (Construction and Operational), Population and Housing, Public Services (Fire, Police, Schools, Parks, Libraries), Transportation and Circulation, Parking, and Public Utilities (Wastewater, Water, Solid Waste, and Energy Conservation).

Lead Agencies

As a lead agency, the City of Los Angeles, through its Community Development Department, is the responsible entity (RE) for this project in accordance with 24 CFR part 58, "Environmental Review Procedures for Entities Assuming HUD Environmental Responsibilities." As a RE, the City of Los Angeles assumes the responsibility for environmental review, decision-making, and action that would otherwise apply to HUD under NEPA. Section 104 (g) of Title I of the Housing and Community Development Act (42 U.S.C. 5304(g)) and Section 288 of the HOME Investment Partnerships Act (42 U.S.C. 12838) allow authorized recipients of HUD assistance to assume NEPA responsibilities in projects involving CDBG and HOME funds.

In addition, the Community Redevelopment Agency of the City of Los Angeles is the California Environmental Quality Act (CEQA) lead agency responsible for preparing an Environmental Impact Report (EIR).

Questions may be directed to the individuals named in this notice under the heading **FOR FURTHER INFORMATION CONTACT**.

Dated: December 18, 2009.

Mercedes Marquez,

Assistant Secretary for Community Planning and Development.

[FR Doc. 2010–283 Filed 1–8–10; 8:45 am]

BILLING CODE 4210–67–P

DEPARTMENT OF THE INTERIOR

Bureau of Land Management

[L63330000–PH0000–LLWO270000; OMB Control Number 1004–0102]

Notice of Proposed Information Collection for 1004–0102

AGENCY: Bureau of Land Management, Interior.

ACTION: 60-day notice and request for comments.

SUMMARY: In compliance with the Paperwork Reduction Act of 1995, the Bureau of Land Management (BLM) is announcing its intention to request reinstatement of an approval to collect information that documents the payment of road use fees for the use of privately owned roads to haul timber sold in accordance with BLM sale contracts. This information collection activity was previously approved by the Office of Management and Budget (OMB), and assigned the control number 1004–0102.

DATES: Comments on the proposed information collection must be received by March 12, 2010, to be assured of consideration.

ADDRESSES: Comments may be mailed to U.S. Department of the Interior, Bureau of Land Management, Mail Stop 401–LS, 1849 C St., NW., Washington, DC 20240. Comments may also be submitted electronically to *Jean_Sonneman@blm.gov*. Please attach "*Attn:* 1004–0102" to either form of comment.

FOR FURTHER INFORMATION CONTACT: To receive a copy of the information collection request, contact Richard Watson, 303–236–0158. Persons who use a telecommunication device for the deaf (TDD) may call the Federal Information Relay Service (FIRS) on 1–800–877–8339, 24 hours a day, seven days a week, to contact Mr. Watson.

SUPPLEMENTARY INFORMATION: OMB regulations at 5 CFR 1320 (which implement provisions of the Paperwork Reduction Act, 44 U.S.C. 3501–352) require that interested members of the public and affected agencies be given an opportunity to comment on information collection and recordkeeping activities (*see* 5 CFR 1320.8 (d) and 1320.12(a)). This notice identifies a collection of information that the BLM will be submitting to OMB for approval.

Comments are invited on: (1) The need for the collection of information for the performance of the functions of the agency; (2) the accuracy of the agency's burden estimates; (3) ways to enhance the quality, utility and clarity

of the information collection; and (4) ways to minimize the information collection burden on respondents, such as use of automated means of collection of the information. A summary of the public comments will accompany the BLM's submission of the information collection requests to OMB.

Before including your address, phone number, email address, or other personal identifying information in your comment, you should be aware that your entire comment–including your personal identifying information–may be made publicly available at any time. While you can ask us in your comment to withhold your personal identifying information from public review, we cannot guarantee that we will be able to do so.

The following information is provided for the information collection:

Title: Road Use Fees Paid Report.

OMB Control Number: 1004–0102.

Summary: Most purchasers of timber from BLM-managed lands use both Federal and private roads to haul the timber. In such instances, the timber sale contract with the BLM requires the purchaser to pay private landowners for the use and/or maintenance of their roads. These fees represent the BLM's share of road construction and maintenance costs under reciprocal right-of-way agreements between the BLM and private landowners. *See* 43 U.S.C. 1762; 43 CFR subpart 2812. This information collection is a report that timber sale purchasers submit to the BLM to show that they have paid the fees required by their timber sale contracts. The BLM uses the report to ensure compliance with the timber sale contract, and to amortize road construction and maintenance costs among several road users.

Frequency of Collection: On occasion.

Description of Respondents: Timber sale purchasers that haul timber purchased from the BLM over privately owned roads that are included in reciprocal right-of-way agreements.

Total Annual Responses: 40.

Response Time: 20 minutes.

Total Annual Burden Hours for Respondents: 13 hours.

Jean Sonneman,

Acting Information Collection Clearance Officer, Bureau of Land Management.

[FR Doc. 2010–253 Filed 1–8–10; 8:45 am]

BILLING CODE 4310–84–P

DEPARTMENT OF THE INTERIOR

National Park Service

Denali National Park and Preserve Aircraft Overflights Advisory Council

AGENCY: National Park Service, Interior.

ACTION: Notice of renewal.

SUMMARY: The Secretary of the Interior is giving notice of the renewal of the Denali National Park and Preserve Aircraft Overflights Advisory Council to offer recommendations, alternatives and possible solutions to management of off-road vehicles at Big Cypress National Preserve.

FOR FURTHER INFORMATION CONTACT: Miriam Valentine, Denali Park and Preserve, 240 W. 5th Avenue, Anchorage, Alaska 99501, 907–644–3611.

SUPPLEMENTARY INFORMATION: The Denali National Park and Preserve Aircraft Overflights Advisory Council has been established in accordance with the Denali National Park and Preserve's *2006 Backcountry Management Plan and EIS.* The plan concluded that air travel is an important means of access for backcountry users, and that scenic air tours are an important means for other park visitors to access and enjoy Mount McKinley and adjoining scenic peaks and glaciers. However, the cumulative impact of these tours, plus the additional aircraft traffic, must be mitigated to protect park resource values and the quality of the visitor experience. The plan calls for an aircraft overflights advisory group that will develop voluntary measures for assuring the safety of passengers, pilots, and mountaineers, and for achieving standards that represent desired future resource conditions at Denali. The National Park Service needs the advice of this group to develop effective mitigation measures that will be acceptable to stakeholders. The Council is composed of individuals that represent a broad range of interests, including air taxi operators, commercial aviation, local landowners, the State of Alaska, the Federal Aviation Administration, climbers and other park users, and the environmental community.

Certification: I hereby certify that the renewal of the Denali National Park and Preserve Aircraft Overflights Advisory Council is necessary and in the public interest in connection with the performance of duties imposed on the Department of the Interior by the Act of August 25, 1916, (39 Stat. 535), as amended, 16 U.S.C. 1 *et seq.,* and other statutes relating to the administration of the National Park System.

Dated: November 25, 2009.

Ken Salazar,

Secretary of the Interior.

[FR Doc. 2010–231 Filed 1–8–10; 8:45 am]

BILLING CODE 4310–PF–P

DEPARTMENT OF THE INTERIOR

Fish and Wildlife Service

[FWS–R7–R–2009–N250; 70133–1265–0000–S3]

Kenai National Wildlife Refuge, Soldotna, AK

AGENCY: U.S. Fish and Wildlife Service, Interior.

ACTION: Notice of availability: record of decision.

SUMMARY: We, the U.S. Fish and Wildlife Service (Service), announce the availability of the record of decision (ROD) for the final environmental impact statement (EIS) for Kenai National Wildlife Refuge (NWR, Refuge). The Refuge is located within the Kenai Peninsula Borough, Alaska. We completed a thorough analysis of the environmental, social, and economic considerations and presented it in our final EIS, which we released to the public on September 18, 2009.

DATES: The Regional Director of the Alaska Region, U.S. Fish and Wildlife Service, signed the ROD on January 4, 2010.

ADDRESSES: You may view or obtain copies of the ROD/final EIS on paper or CD–ROM by any of the following methods:

Agency Web Site: Download a copy of the document(s) at *http://alaska.fws.gov/nwr/planning/kenpol.htm.*

E-mail: fw7_kenai_planning@fws.gov. Include "Kenai ROD" in the subject line of the message.

Mail: Refuge Manager, Kenai National Wildlife Refuge, P.O. Box 2139, Soldotna, AK 99669–2139.

In-Person Viewing or Pickup: Call Peter Wikoff, Planning Team Leader at (907) 786–3357 to make an appointment during regular business hours at U.S. Fish and Wildlife Service, 1011 East Tudor Rd., MS–231, Anchorage, AK 99503; *fax:* (907) 786–3965.

FOR FURTHER INFORMATION, CONTACT: Refuge Manager at the address or phone number above.

SUPPLEMENTARY INFORMATION:

Introduction

With this notice, we finalize the CCP process for Kenai NWR. We released the

draft CCP/draft EIS to the public, announcing and requesting comments in a notice of availability in the **Federal Register** on May 8, 2008 (73 FR 26140). We announced the availability of the final CCP/EIS in the **Federal Register** on August 27, 2009 (74 FR 43718).

In accordance with National Environmental Policy Act (NEPA) (40 CFR 1506.6(b)) requirements, this notice announces the availability of the ROD for the final EIS and CCP for Kenai NWR. We completed a thorough analysis of the environmental, social, and economic considerations, which we included in the final CCP/EIS. The ROD documents our selection of Alternative E, the Preferred Alternative, in the CCP, with modifications. The CCP will guide us in managing and administering Kenai Refuge for the next 15 years. Alternative E, as we described in the final EIS/ROD, is the foundation for the CCP, with modifications.

The Kenai Refuge Comprehensive Conservation Plan provides management guidance that conserves Refuge resources and facilitates compatible fish and wildlife-dependent public use activities during the next 15 years. The following is a summary of the ROD for the Refuge's Final CCP/EIS.

We have selected Alternative E, the Preferred Alterative, with modifications, as the Comprehensive Conservation Plan for Kenai Refuge. Alternative E addresses key issues and concerns identified during the planning process and will best achieve the purposes of the Refuge as well as the mission of the National Wildlife Refuge System. This decision adopts the management goals and objectives (Chapter 2) and the stipulations and mitigation measures identified in Alternative E. Implementation of Alternative E, as modified, will occur over the next 15 years, depending on future staffing levels and funding.

Modifications to Alternative E

With consideration to comments from the State of Alaska, the management direction provided by Alternative E will be modified as follows:

- We will alter the opening date of seasonally closed lakes from September 30 to September 10, to coincide with that of the Alaska Board of Game's Kenai Controlled Use Area in Game Management Unit 15A, when Refuge regulations are updated. These lakes will then remain open for public use until May 1 (approximately when the ice melts) each spring.
- Under current regulations, the operation of aircraft between May 1 and September 30 on any lake where nesting trumpeter swans and/or their broods are present is prohibited. Over the next several years, we will examine swan brood survey data and other information to determine if swan abundance has increased to the point this restriction has created a de facto closure of so many lakes as to significantly impact access to the refuge back-country. We will evaluate our current closure regulations in light of these findings.

Factors We Considered in Decisionmaking

We based our decision on a thorough analysis of the environmental, social, and economic considerations we presented in the Final CCP/EIS. We reviewed and considered the impacts identified in Chapter 4 of the Draft and Final CCP/EIS; relevant issues, concerns, and opportunities; input we received throughout the planning process, including the results of various studies and surveys, advice from technical experts, and public comments on the Draft and Final CCP/EIS; and other factors, including refuge purposes and relevant laws, regulations, and policies. The Final EIS/CCP addresses a variety of needs, including protection of fish and wildlife populations and their habitats and providing opportunities for fish and wildlife-dependent recreation, subsistence, and other public uses. The combination of these components in Alternative E contributes significantly to achieving refuge purposes and goals. Alternative E also strengthens the monitoring of fish, wildlife, habitat, and public uses on the Refuge to provide means to better respond to changing conditions in the surrounding landscape.

The adoption of Alternative E, as modified, is effective immediately.

Dated: January 4, 2010.

Geoffrey L. Haskett,

Regional Director, U.S. Fish & Wildlife Service, Anchorage, Alaska.

[FR Doc. 2010–220 Filed 1–8–10; 8:45 am]

BILLING CODE 4310–55–P

DEPARTMENT OF THE INTERIOR

National Park Service

AGENCY: National Park Service, Interior.

ACTION: Notice of availability of the Record of Decision for the General Management Plan/Environmental Impact Statement for the Jefferson National Expansion Memorial, Missouri.

SUMMARY: Pursuant to Section 102(2)(C) of the National Environmental Policy Act of 1969, 42 U.S.C. 4332(2)(C), the National Park Service (NPS) announces the availability of a Record of Decision (ROD) for the General Management Plan/Environmental Impact Statement (GMP/EIS) for the Jefferson National Expansion Memorial (Memorial), Missouri. On November 23, the NPS Midwest Region regional director approved the ROD for the final GMP/EIS. As soon as practicable, the NPS will begin to implement the preferred alternative.

The NPS will implement the preferred alternative as described in the final GMP/EIS issued on October 23, 2009, with one alteration to the proposed boundary in East St. Louis, Illinois. Alternative 3 (Program Expansion), the preferred alternative, will revitalize the Memorial by expanded programming, facilities, and partnerships. The NPS will capitalize on multiple opportunities to expand visitor experience throughout the Memorial.

In order to gain the widest breadth of ideas for expanding interpretation, education opportunities, and visitor amenities at the Memorial, a design competition, akin to the 1947 competition, will be initiated by the NPS in close coordination with partners. Project funding will not come all at once but rather will most likely be provided by partners, donations, and other non-Federal and Federal sources. Private funding will be required in order to fully implement the winning entry of the design competition.

The NPS will use the design competition to seek opportunities to enhance existing entrances to the Memorial on the north and south, as well as to capitalize on the primary axis between the Old Courthouse and the Gateway Arch with new entrances on the west and east and by establishing a new east portal linking East St. Louis to the Gateway Arch grounds by water taxi. A new external and internal visitor transportation system will be designed as part of the competition. The ultimate configuration and use of the south end of the Memorial will be determined by the results of the design competition. Similarly, the design competition will vet ideas for the configuration and use of that portion of the Memorial in East St. Louis. While the entrants will be asked to respect the recent developments at Malcolm Martin Memorial Park, the NPS and the Metro East Park and Recreation District will entertain designs that integrate the established functions into a cohesive vision for the Memorial.

While the design solutions might include the development of above-ground structures within a portion of the designated Design Competition Overlay, the NPS will not allow the implementation of a project that would

cause impairment to the Memorial, and all enhancements will be required to be located in such a manner as to preserve the integrity of the National Historic Landmark and National Register Historic District.

In addition to considering the "winning" ideas from the competition, the NPS will continue the educational and interpretive programs currently offered at the Memorial and expand opportunities for visitors to participate in more interactive experiences across the Memorial grounds. The grounds surrounding the Gateway Arch will be managed in such a way as to accommodate and promote more visitor activities and special events than are currently provided.

The NPS will actively coordinate with the city and State to enhance the pedestrian environment around the Memorial by developing a unifying streetscape along the Gateway Mall and the other streets adjacent to the Memorial, including Leonor K. Sullivan Boulevard and the riverfront levee.

The ROD includes a statement of the decision made, synopses of other alternatives considered, the basis for the decision, a description of the environmentally preferable alternative, a finding on impairment of park resources and values, a listing of measures to minimize environmental harm, and an overview of public involvement in the decision-making process.

FOR FURTHER INFORMATION CONTACT: Copies of the ROD can be obtained by contacting Superintendent Thomas Bradley, Jefferson National Expansion Memorial, 11 North 4th Street, St. Louis, Missouri 63102. You may also view the document via the Internet through the NPS Planning, Environment, and Public Comment Web site (*http://parkplanning.nps.gov*); simply click on the link to the Memorial.

Dated: November 23, 2009.

Ernest Quintana,

Regional Director, Midwest Region.

[FR Doc. 2010–233 Filed 1–8–10; 8:45 am]

BILLING CODE 4312–AW–P

DEPARTMENT OF THE INTERIOR

National Park Service

National Mall and Memorial Parks, Washington, DC; Notice of Availability of an Environmental Impact Statement

AGENCY: Department of the Interior, National Park Service.

ACTION: Notice of Availability.

SUMMARY: Pursuant to the National Environmental Policy Act of 1969, 42 U.S.C. 4332(2)(c), the National Park Service announces the availability of a Draft Environmental Impact Statement for the National Mall Plan, within the National Mall and Memorial Parks in Washington, DC. The National Mall Plan is a long-range management plan that focuses on the use and preservation of the National Mall. The study area is approximately 650 acres in size and contains some of the earliest designated public land in our nation, dating from 1790. The study area contains a significant concentration of our Nation's memorials, cultural resources, and museums and includes the great public open spaces of the Nation's Capital.

DATES: The NPS will undertake a 90-day public review of the Draft Environmental Impact Statement for the National Mall Plan following publication by the Environmental Protection Agency of the Notice of Availability of the Draft Environmental Impact Statement.

The NPS plans to reach out to a nationwide audience and to schedule public meetings after the publication of the Draft Environmental Impact Statement so that the public has adequate time to read the draft document. Dates, times and locations of meetings and other outreach opportunities will be announced in press releases, e-mail announcements and on the National Mall Plan Web site, *http://www.nps.gov/nationalmallplan.*

ADDRESSES: Copies of the Draft Environmental Impact Statement and National Mall Plan will be available for public review and comment at *htttp://www.nps.gov/nationalmallplan,* at the National Mall and Memorial Parks Headquarters at 900 Ohio Drive, SW., Washington, DC 20024, and at local libraries around Washington, DC.

SUPPLEMENTARY INFORMATION: If you wish to comment, you may submit your comments online by visiting *http://www.nps.gov/nationalmallplan.* A link will be provided to the public comment site where instructions will be provided on how to submit your comments. You may also mail or hand-deliver comments to: National Mall Plan, National Mall & Memorial Parks, 900 Ohio Drive, SW., Washington, DC 20024, Attention: Susan Spain, Project Executive.

Before including your address, phone number, e-mail address, or other personal identifying information in your comment, you should be aware that your entire comment—including your personal identifying information—may be made publicly available at any time. While you can ask us in your comment to withhold your personal identifying information from public review, we cannot guarantee that we will be able to do so. The NPS will respond to substantive comments and make appropriate changes to the National Mall Plan, after which a Final Environmental Impact Statement will be published. An official Record of Decision will be announced in the **Federal Register** 30 days after publication of the Final Environmental Impact Statement.

FOR FURTHER INFORMATION CONTACT: Susan Spain, Project Executive, National Mall Plan at (202) 245–4692.

Dated: December 2, 2009.

Margaret O'Dell,

Regional Director, National Capital Region.

[FR Doc. 2010–223 Filed 1–8–10; 8:45 am]

BILLING CODE 4312–39–P

DEPARTMENT OF THE INTERIOR

Bureau of Land Management

[ID–957–1420–BJ]

Idaho: Filing of Plats of Survey

AGENCY: Bureau of Land Management, Interior.

ACTION: Notice of filing of plats of surveys.

SUMMARY: The Bureau of Land Management (BLM) has officially filed the plats of survey of the lands described below in the BLM Idaho State Office, Boise, Idaho, effective 9 a.m., on the dates specified.

FOR FURTHER INFORMATION CONTACT: Bureau of Land Management, 1387 South Vinnell Way, Boise, Idaho 83709–1657.

SUPPLEMENTARY INFORMATION: These surveys were executed at the request of the Bureau of Land Management to meet their administrative needs. The lands surveyed are:

The plat constituting the entire survey record of the dependent resurvey of a portion of the subdivisional lines, Township 8 South, Range 14 East, of the Boise Meridian, Idaho, Group Number 1269, was accepted October 14, 2009.

The plat representing the dependent resurvey of portions of the subdivisional lines and Mineral Survey Number 3149, Township 11 North, Range 17 East, of the Boise Meridian, Idaho, Group Number 1273, was accepted November 4, 2009.

The plat representing the dependent resurvey of portions of the south boundary, west boundary, and subdivisional lines, and the subdivision

of sections 20 and 30, Township 3 South, Range 19 East, of the Boise Meridian, Idaho, Group Number 1270, was accepted November 13, 2009.

The plat representing the dependent resurvey of portions of the west boundary and subdivisional lines, and the subdivision of sections 29, 30, and 31, Township 7 South, Range 36 East, of the Boise Meridian, Idaho, Group Number 1148, was accepted November 19, 2009.

The supplemental plat prepared to show new lottings in section 23, T. 4 S., R. 4 E., Boise Meridian, Idaho, was accepted December 17, 2009.

The plat representing the dependent resurvey of a portion of the subdivisional lines, Township 3 South, Range 1 East, of the Boise Meridian, Idaho, Group Number 1243, was accepted December 17, 2009.

Dated: January 4, 2010.

Stanley G. French,

Chief Cadastral Surveyor for Idaho.

[FR Doc. 2010–235 Filed 1–8–10; 8:45 am]

BILLING CODE 4310–CG–P

DEPARTMENT OF THE INTERIOR

Bureau of Indian Affairs

Tribal Consultation on Proposed Revisions to 25 CFR Parts 81 & 82

AGENCY: Bureau of Indian Affairs.

ACTION: Notice of an additional tribal consultation meeting.

SUMMARY: Notice is hereby given that the Bureau of Indian Affairs (BIA) will conduct another consultation meeting with Indian tribes reorganized under the Indian Reorganization Act (IRA) and the Oklahoma Indian Welfare Act, and other interested tribal leaders, to obtain oral and written comments concerning the potential revision of regulations at 25 CFR part 81, Tribal Reorganization under a Federal Statute, and 25 CFR part 82, Petitioning Procedures for Tribes Reorganized Under Federal Statute and Other Organized Tribes. In addition to the locations listed in the **Federal Register** of November 12, 2009, in FR Doc. E9–27181, page 58310, the BIA will conduct a consultation meeting with Indian tribes in Albuquerque, New Mexico.

DATE: February 4, 2010 in Albuquerque, New Mexico. See the **SUPPLEMENTARY INFORMATION** section of this notice for more details.

FOR FURTHER INFORMATION CONTACT: Elizabeth Colliflower, Tribal Relations Specialist, Division of Tribal Government Services, 1849 C Street, NW., Mail Stop 4513–MIB, Washington, DC; Telephone (202) 513–7641; Fax (202) 501–0679.

SUPPLEMENTARY INFORMATION:

I. Background

Notice was published in the **Federal Register** on November 12, 2010, that the BIA would conduct five tribal consultation meetings on the BIA draft revisions to 25 CFR part 81 and 25 CFR part 82. The background described in the Notice reads:

In 1992, the BIA drafted revisions to 25 CFR part 81 and 25 CFR part 82 and held four consultation sessions. The BIA received comments and recommendations that are now in the current draft version. The current draft version also:

- Incorporates the amendments made to section 16 of the IRA, 25 U.S.C. 476 (48 Stat. 984), as amended by the Act of November 1, 1988 (Pub. L. 100–581, 102 Stat. 2938), which established time frames within which the Secretary of the Interior must call and conduct Secretarial elections;
- Reflects the amendments made to section 17 of the IRA by the Act of May 24, 1990 (Pub. L. 101–301, 104 Stat. 207) under which additional tribes may petition for charter of incorporation and removes the requirement of a Secretarial election to ratify new charters;
- Reflects the addition of two new subsections to section 16 of the IRA by the Technical Corrections Act of 1994 (Pub. L. 103–363, 108 Stat. 707), which eliminates distinctions between Indians reorganized as historical tribes and those reorganized as communities of adult Indians;
- Includes language clarifying that an IRA tribe may amend its constitution to remove Secretarial approval of future amendments as indicated by the new subsection to Section 16 of the IRA with the enactment of the Native American Technical Corrections Act of 2004 (Pub. L. 106–179, 118 Stat. 453);
- Provides guidelines for the approval or disapproval of charters by the Secretary; and
- Corrects demonstrated weaknesses and clarifies confusing language in the existing regulations.

A consultation booklet containing the current draft version of the rule will be available for the meetings and will be distributed to federally recognized Indian tribes and BIA regional and agency offices.

II. Meeting Details

The additional final Tribal consultation meeting will be held on February 4, 2010 at the Bureau of Indian Affairs national Indian Programs Training Center, 1011 Indian School Rd., NW., Room 271, Albuquerque, New Mexico, from 9 a.m.–4:00 p.m. (local time).

Dated: December 28, 2009.

Larry Echo Hawk,

Assistant Secretary—Indian Affairs.

[FR Doc. 2010–164 Filed 1–8–10; 8:45 am]

BILLING CODE 4310–WP–P

DEPARTMENT OF THE INTERIOR

Bureau of Indian Affairs

Tribal Consultation on Proposed Revisions to 25 CFR Parts 81 & 82

AGENCY: Bureau of Indian Affairs, Interior.

ACTION: Notice of tribal consultation meetings; correction.

SUMMARY: The Bureau of Indian Affairs published a document in the **Federal Register** of November 12, 2009, concerning the notice of tribal consultation meetings. The document included the date of January 14, 2010 for the meeting scheduled at the Pala Casino Resort and Spa in Pala, California. This notice changes the date to February 2, 2010, and the location to the Pala Administration Building in Pala, California.

DATES: *Effective Date:* This correction is effective as of January 11, 2010.

FOR FURTHER INFORMATION CONTACT: Elizabeth Colliflower, Office of Tribal Services, 1849 C Street, NW., Mail Stop 4513–MIB, Washington, DC 20240; Telephone (202) 513–7641; Fax (202) 208–5113.

SUPPLEMENTARY INFORMATION: The Bureau of Indian Affairs published a document in the **Federal Register** of November 12, 2009 (74 FR 58310), concerning the notice of tribal consultation meetings on proposed revisions to 25 CFR parts 81 and 82. The document included the date of January 14, 2010 for the meeting scheduled at the Pala Casino Resort and Spa in Pala, California. This notice changes the date to February 2, 2010, and the location to the Pala Administration Building in Pala, California. In the **Federal Register** of November 12, 2009, in FR Doc. E9–27181, on page 58310, in the third column, correct the date "January 14, 2010," to read: "February 2, 2010". On page 58311, in the table, correct "January 14, 2010. * * * Pala Casino Resort and Spa, 11154 Hwy. 76, Pala, California 92059; Telephone: (877) 946–7252" to read "February 2, 2010. * * * Pala Administration Building, 12196 Pala Mission Rd., Pala, California 92059; *Telephone:* (760) 891–3500." All other

information in the table remains the same.

Dated: December 31, 2009.

Larry Echo Hawk,

Assistant Secretary—Indian Affairs.

[FR Doc. 2010–242 Filed 1–8–10; 8:45 am]

BILLING CODE 4310–4J–P

DEPARTMENT OF THE INTERIOR

Bureau of Reclamation

Pick-Sloan Missouri Basin Program, Eastern and Western Division Proposed Project Use Power Rate

AGENCY: Bureau of Reclamation, Interior.

ACTION: Notice of Proposed Pick-Sloan Missouri Basin Program, Eastern and Western Divisions, Project Use Power Rate Adjustment.

SUMMARY: The Bureau of Reclamation (Reclamation) is proposing a rate adjustment (proposed rate) for Project Use Power for the Pick-Sloan Missouri Basin Program (P–SMBP), Eastern and Western Divisions. The proposed rate for Project Use Power is to recover all annual operating, maintenance, and replacement expenses. The analysis of the proposed Project Use Power Rate is included in a booklet available upon request. The proposed rate for Project Use Power will become effective February 19, 2010.

This notice provides the opportunity for public comment. After review of comments received, Reclamation will consider them, revise the rates if necessary, and recommend a proposed rate for approval to the Secretary of the Interior's Office.

DATES: The comment period will begin with publication of this notice in the **Federal Register**. To be assured consideration, please submit comments on or before February 10, 2010.

ADDRESSES: Please send written comments to Mike Ferguson, GP–2020, Power O&M Administrator, Bureau of Reclamation, P.O. Box 36900, Billings, MT 59107–6900.

All booklets, studies, comments, letters, memoranda, and other documents made or kept by Reclamation for the purpose of developing the proposed rate for Project Use Power will be made available for inspection and copying at the Great Plains Regional Office, located at 316 North 26th Street, Billings, MT 59101.

FOR FURTHER INFORMATION CONTACT: Mike Ferguson, Bureau of Reclamation, Great Plains Regional Office at (406) 247–7705 or by e-mail at *MFerguson@usbr.gov.*

SUPPLEMENTARY INFORMATION:

Proposed Rate Adjustment

Power rates for the P–SMBP are established pursuant to the Reclamation Act of 1902 (43 U.S.C. 371 *et seq.*), as amended and supplemented by subsequent enactments, particularly section 9(c) of the Reclamation Project Act of 1939 (43 U.S.C. 485h (c)) and the Flood Control Act of 1944 (58 Stat. 887).

Beginning February 19, 2010, Reclamation proposes to:

(a) Increase the energy charge from 12.55 mills/kWh to 16.17 mills/kWh.

(b) the monthly demand charge will remain at zero.

The Project Use Power Rate will be reviewed each time Western Area Power Administration (Western) adjusts the P–SMBP Firm Power Rate. Western will conduct the necessary studies and use the methodology identified in this rate proposal to determine a new rate.

The existing rate schedule MRB–P12 placed into effect on January 21, 2006, will be replaced by rate schedule MRB–P13. The new rate schedule will include clarifying language for entities exceeding the contract rate of delivery (CROD). Coincident electrical demand in excess of the CROD will result in a penalty where a share of that month's energy proportional to the excess will be charged at ten (10) times the current project use rate as reflected in rate schedule MRB–13. The penalty will be calculated as follows:

$$P = (((BD/CROD)—1) * BE) * (10 * CR)$$

Where: P = Penalty ($)
BD = Billed Demand (kW)
CROD = Contract Rate of Delivery (kW)
BE = Billed Energy (kWh)
CR = Current Project Use Power Rate (mills/kWh)

The customer will also be billed for any increased capacity and transmission charges incurred by the Government as a result of exceeding the CROD.

In compliance with the National Environmental Policy Act of 1969 (NEPA), 42 U.S.S. 4321 *et seq.;* Council on Environmental Quality Regulations (40 CFR Parts 1500–1508); and Reclamation's Regulations (10 CFR Part 1021), Reclamation has determined that this action is categorically excluded from the preparation of an Environmental Assessment or Environmental Impact Statement.

Before including your name, address, phone number, e-mail address, or other personal identifying information in any correspondence, you should be aware that your entire correspondence, including your personal identifying information, may be made publicly available at any time. While you can request in your correspondence that Reclamation withhold your personal identifying information from public review, we cannot guarantee Reclamation is able to do so. Reclamation will make all submissions from organizations or businesses, and from individuals identifying themselves as representatives or officials of organizations or businesses, available for public disclosure in their entirety.

Dated: November 20, 2009.

Gary W. Campbell,

Deputy Regional Director.

[FR Doc. 2010–213 Filed 1–8–10; 8:45 am]

BILLING CODE 4310–MN–P

DEPARTMENT OF THE INTERIOR

Bureau of Land Management

[LLNVL00000. L51010000.ER0000 .LVRWF09F8510; MO4500008904; N–79734; 9–08807; TAS:14X5017]

Notice of Availability of the Record of Decision for the Lincoln County Land Act Groundwater Development and Utility Right-of-Way Project, Nevada

AGENCY: Bureau of Land Management, Interior.

ACTION: Notice of availability.

SUMMARY: The Bureau of Land Management (BLM) announces the availability of the Record of Decision (ROD) for the Lincoln County Land Act Groundwater Development and Utility Right-of-Way (ROW) Project (the project). The BLM Ely District Manager signed the ROD on January 8, 2010, which constitutes the final decision of the BLM and makes the decision effective immediately.

ADDRESSES: Copies of the ROD are available upon request from the Field Manager, BLM Ely District Office, Bureau of Land Management, or at the following Web site: *http://www.blm.gov/nv/*. A printed copy or electronic copy on compact disc of the ROD is available on request from the BLM Nevada State Office, 1340 Financial Boulevard, P.O. Box 12000, Reno, Nevada 89520, phone (775) 861–6681 or e-mail: *nvgwprojects@blm.gov*. Copies of the ROD will be available for review at the following locations in Nevada:

- BLM Nevada State Office, 1340 Financial Boulevard, Reno, Nevada
- BLM Ely District Office, 702 North Industrial Way, Ely, Nevada
- BLM Caliente Field Office, US Highway 93, Building #1, Caliente, Nevada

FOR FURTHER INFORMATION CONTACT: Penny Woods, BLM Project Manager, P.O. Box 12000, Reno, Nevada 89520,

telephone: (775) 861–6466, or *e-mail: nvgwprojects@blm.gov* with "Lincoln County Land Act Information Request" in the subject line.

SUPPLEMENTARY INFORMATION: After extensive environmental analysis, consideration of public comments, and application of pertinent Federal laws and policies, it is the decision of the BLM to offer to Lincoln County Water District (LCWD) a ROW grant for the construction, operation, maintenance and termination of the mainline water pipeline, main power lines, pump stations, regulating tanks and other ancillary facilities of the project. Pursuant to the Lincoln County Conservation, Recreation and Development Act of 2004, Public Law 108–424, the ROW grant will authorize the use of public lands in perpetuity. The BLM's decision authorizes issuance of a ROW grant to LCWD for the proposed action as analyzed in the Final Environmental Impact Statement (EIS), issued in May 2009. The Environmental Protection Agency published a Notice of Availability of the Final EIS in the **Federal Register** on May 29, 2009.

The decision by BLM to offer the ROW grant to LCWD is appealable subject to 43 CFR 4, subpart E—Special Rules Applicable to Public Land Hearings and Appeals, and 43 CFR 2801.10. Any party adversely affected by this decision may appeal within the 30-day timeframe by filing an appeal with the BLM Ely District Manager at the address listed above. To file a petition for a stay of the effectiveness of this decision during the time that an appeal is being reviewed by the Interior Board of Land Appeals, the petition for a stay must accompany the Notice of Appeal (43 CFR 4.21 or 43 CFR 2801.10). The appeal and petition for a stay (if requested) must be filed with the Ely District Manager, Bureau of Land Management, 702 North Industrial Way, HC33, Box 33500, Ely Nevada 89301, or Fax: (775) 289–1910.

Copies of the appeal should also be filed with:

- Project Manager, Nevada Groundwater Projects Office, Bureau of Land Management, P.O. Box 12000, Reno, Nevada 89520, or *Fax:* (775) 861–6689.
- Office of Hearings and Appeals, U.S. Department of the Interior, 801 North Quincy Street, Suite 300, Arlington, Virginia 22203–1710, or *Fax:* (703) 235–8349.
- Office of the Solicitor, Pacific Southwest Region, U.S. Department of the Interior, 2800 Cottage Way, Suite E–1712, Sacramento, California 95825, or *Fax:* (916) 978–5694.

Persons interested in filing an appeal are encouraged to consult the cited Federal regulations for additional appeal requirements.

(Authority: 43 U.S.C. 1761, Pub. L. 108–424)

Rosemary Thomas,

Ely District Manager.

[FR Doc. 2010–254 Filed 1–8–10; 8:45 am]

BILLING CODE 4310–HC–P

DEPARTMENT OF JUSTICE

Executive Office for United States Attorneys

[OMB Number 1105–0082]

Agency Information Collection Activities: Proposed Collection; Comments Requested

ACTION: 30-Day Notice of Information Collection Under Review: Office of Legal Education Nomination/Confirmation Form.

The Department of Justice (DOJ), Office of Justice Programs (OJP) will be submitting the following information collection request to the Office of Management and Budget (OMB) for review and approval in accordance with the Paperwork Reduction Act of 1995. The proposed information collection is published to obtain comments from the public and affected agencies. This proposed information collection was previously published in the **Federal Register** Volume 74, Number 200, page 53512 on October 19, 2009, allowing for a 60 day comment period.

The purpose of this notice is to allow for an additional 30 days for public comment until February 10, 2010. This process is conducted in accordance with 5 CFR 1320.10.

Written comments and/or suggestions regarding the items contained in this notice, especially the estimated public burden and associated response time, should be directed to the Office of Management and Budget, Office of Information and Regulatory Affairs, Attention Department of Justice Desk Officer, Washington, DC 20503. Additionally, comments may be submitted to OMB via facsimile to (202) 395–5806. Written comments and suggestions from the public and affected agencies concerning the proposed collection of information are encouraged. Your comments should address one or more of the following four points:

—Evaluate whether the proposed collection of information is necessary for the proper performance of the functions of the agency, including whether the information will have practical utility;

—Evaluate the accuracy of the agencies estimate of the burden of the proposed collection of information, including the validity of the methodology and assumptions used;

—Enhance the quality, utility, and clarity of the information to be collected; and

—Minimize the burden of the collection of information on those who are to respond, including through the use of appropriate automated, electronic, mechanical, or other technological collection techniques or other forms of information technology, *e.g.,* permitting electronic submission of responses.

Overview of This Information Collection

(1) *Type of Information Collection:* Existing Collection in use Without an OMB Control Number.

(2) *Title of the Form/Collection:* Office of Legal Education Nomination Form.

(3) *Agency form number, if any, and the applicable component of the Department sponsoring the collection:* DOJ Form Number, none. Ofice of Legal Education, Executive Office for United States Department of Justice (OLE–01 and OLE–02.

(4) *Affected public who will be asked or required to respond, as well as a brief abstract:* Respondents will be current and potential users of agency training services. Respondents may represent Federal agencies, as well as State, local, and tribal governments. The Executive Office for United States Attorneys will use the collected information to select class participants, arrange for transportation and reserve rooms; have an address to contact the participant, and an emergency contact.

(5) *An estimate of the total number of respondents and the amount of time estimated for an average respondent to respond/reply:* It is estimated that there will be 2,140 responses annually. It is estimated that each form will take 5 minutes to complete.

(6) *An estimate of the total public burden (in hours) associated with the collection:* An estimate of the total hour burden to conduct this survey is 1,750 hours.

If additional information is required contact: Lynn Bryant, Department Clearance Officer, United States Department of Justice, Justice Management Division, Policy and Planning Staff, Patrick Henry Building, Suite 1600, 601 D Street, NW., Washington, DC 20530.

Dated: January 4, 2010.

Lynn Bryant,

Department Clearance Officer, PRA, U.S. Department of Justice.

[FR Doc. 2010–171 Filed 1–8–10; 8:45 am]

BILLING CODE 4410–07–P

DEPARTMENT OF JUSTICE

Bureau of Justice Statistics

[OMB Number 1121–0094]

Agency Information Collection Activities: Existing Collection; Comments Requested

ACTION: 60-Day Notice of Information Collection Under Review: Extension of a Currently Approved Collection; Annual Survey of Jails.

The Department of Justice (DOJ), Bureau of Justice Statistics, will be submitting the following information collection request to the Office of Management and Budget (OMB) for review and approval in accordance with the Paperwork Reduction Act of 1995. The proposed information collection is published to obtain comments from the public and affected agencies. Comments are encouraged and will be accepted for "sixty days" until March 12, 2010. This process is conducted in accordance with 5 CFR 1320.10.

If you have comments especially on the estimated public burden or associated response time, suggestions, or need a copy of the proposed information collection instrument with instructions or additional information, please contact Todd D. Minton, Bureau of Justice Statistics, 810 Seventh Street, NW., Washington, DC 20531 (*phone:* 202–305–9630).

Written comments and suggestions from the public and affected agencies concerning the proposed collection of information are encouraged. Your comments should address one or more of the following four points:

—Evaluate whether the proposed collection of information is necessary for the proper performance of the functions of the agency, including whether the information will have practical utility;

—Evaluate the accuracy of the agencies estimate of the burden of the proposed collection of information, including the validity of the methodology and assumptions used;

—Enhance the quality, utility, and clarity of the information to be collected; and

—Minimize the burden of the collection of information on those who are to respond, including through the use of appropriate automated, electronic, mechanical, or other technological collection techniques or other forms of information technology, e.g., permitting electronic submission of responses.

Overview of this information collection:

(1) *Type of Information Collection:* Revisions of a currently approved collection.

(2) *Title of the Form/Collection:* The Annual Survey of Jails (ASJ). The collection includes the forms: Annual Survey of Jails (ASJ)-regular and long form, Survey of Jails in Indian Country (SJIC)-regular form and addendum, and the Survey of Large Jails (SLJ).

(3) *Agency form number, if any, and the applicable component of the Department of Justice sponsoring the collection: Form number(s):* CJ–5 and CJ–5A (ASJ regular form), CJ–5 and CJ–5A (ASJ long form), CJ–5B (SJIC form), CJ–5B Addendum (SJIC), and CJ–5C (SLJ form). Corrections Statistics Unit, Bureau of Justice Statistics, Office of Justice Programs, United States Department of Justice.

(4) *Affected public who will be asked or required to respond, as well as a brief abstract:*

Primary: County, City, and Tribal jail authorities. This collection is the only effort that provides an ability to maintain important jail statistics in years between jail censuses. The ASJ series enables the Bureau; Federal, State, local, and Tribal correctional administrators; legislators; researchers; and planners to track growth in the number of jails and their capacities nationally; as well as, track changes in the demographics and supervision status of jail population and the prevalence of crowding. Information collected in the long form and survey addendums provide critical data on jail population movements and inmate mental and medical health services and other programs available to confined inmates.

For CJ–5 and CJ–5A (ASJ regular form), 561 respondents from county and city jails will be asked to provide information for the following categories:

(a) At midyear (last weekday in the month of June), the number of inmates confined in jail facilities including; male and female adult and juvenile inmates; persons under age 18 held as adults; convicted and unconvicted males and females; race categories; held for Federal authorities, State prison authorities and other local jail jurisdictions;

(b) At midyear, the number of persons under jail supervision who were not U.S. citizens;

(c) Whether the jail facilities has a weekend incarceration program prior to midyear and the number of inmates participating;

(d) The number of new admissions into and final discharges from jail facilities during the last week in June;

(e) The date and count for the greatest number of confined inmates during the 30-day period in June;

(f) The average daily population of jail facilities from July 1 of the previous year to June 30 of the current collection year;

(g) At midyear, the total rated capacity of jail facilities;

(h) At midyear, the number of persons under jail supervision but not confined (e.g., electronic monitoring, day reporting, etc.).

For CJ–5B (SJIC form), respondents from 85 Indian country correctional facilities operated by tribal authorities or the Bureau of Indian Affairs (BIA) will be asked to provide information for the following categories:

(a) At midyear (last weekday in the month of June), the number of inmates confined in jail facilities including; male and female adult and juvenile inmates; persons under age 18 held as adults; convicted and unconvicted males and females; persons held for a felony, misdemeanor; their most serious offense (e.g., domestic violence offense, aggravated or simple assault, driving while intoxicated, etc.).

(b) The average daily population during the 30-day period in June;

(c) The date and count for the greatest number of confined inmates during the 30-day period in June;

(d) The number of new admissions into and final discharges during the month of June;

(e) From July 1 of the previous year to June 30 of the current collection year: the number of inmate deaths while confined and the number of deaths attributed to suicide and the number of confined inmates that attempted suicide;

(f) At midyear, the total rated capacity of jail facilities;

(g) At midyear, the inmate housing characteristics and the number held (e.g., single occupied cells or rooms, multiple occupied units originally designed for single occupancy; multiple occupied units designed for multiple occupancy, temporary holding areas, etc.);

(h) At midyear, whether or not the jail facility was under a Tribal, State, or Federal court order or consent decree to limit the number of persons it can house (and the count), and/or for conditions of confinement;

(i) At midyear, the number of male and female correctional staff employed by the facility and their occupation (e.g., administration, jail operations, educational staff, etc.);

(j) At midyear, how many jail operations employees had received the basic detention officer certification and how many had received 40 hours of in-service training;

(k) From July 1 of the previous year to June 30 of the current collection year: how many jail operation employees did the facility hire for employment; how many jail operation employees were separated from employment in the facility;

(l) At midyear, how many specific jail operation employee positions were vacant.

The ASJ long form (CJ–5 and CJ–5A), the SLJ (CJ–5C), and the SJIC survey addendum (CJ–5B Addendum) provides BJS a vehicle to gather expanded, yet critical information from jails on:

- Flows of inmates going through jails and describing the jail inmate population that reflect jail workload;
- Length of stay in jail and the contribution of length of stay to jail populations;
- Medical, mental health, and substance abuse treatment services issues in jails;
- Suicide prevention, domestic violence counseling, sex offender treatment, educational programs, and inmate work assignments, and other inmate programs;
- Staff characteristics and assaults on staff resulting in death.

For CJ–5 and CJ–5A (ASJ long form), in addition to similar information collected on the regular form, 373 respondents that are included with certainty in the ASJ sample survey will be asked to provide expanded and additional information for the following categories:

(a) Expanded information on: The number of convicted inmates that are unsentenced or sentenced and the number of unconvicted inmates awaiting trial/arraignment, or transfers/holds for other authorities; persons discharged from jails to include the timed served by convicted and unconvicted inmates;

(b) Expanded information on the number of confined inmates held for reasons including detoxification holds only, persons held for protective custody, for contempt, or for the courts as witnesses;

(c) At midyear, the number of correctional officers and other staff employed by jail facilities;

(d) From July 1 of the previous year to June 30 of the current collection year: the number of inmate-inflicted physical assaults (and counts) on correctional officers and other staff and the number of staff deaths as a result.

For the CJ–5B Addendum (SJIC), a one-time collection between 2010 and 2012 will be administered to 85 respondents. Information for the following categories will be requested:

(a) How does the facility provide medical health services to inmates (e.g., on-site staff physicians, IHS, off-site medical services, etc.);

(b) At midyear, whether the jail facilities detoxify confined persons (and count) from drugs or alcohol;

(c) Policy for testing inmates for Tuberculosis, Hepatitis B and C, and the Human Immunodeficiency Virus (HIV) that causes aids (e.g., at admission, at regular intervals, random sample, indication of need, etc.);

(d) How does the facility provide mental health services to inmates (e.g., screen inmates at intake, 24-hour mental health care; counseling by a trained mental health professional, monitor the use of psychotropic medications, assist released inmates to obtain community mental health services, etc.);

(e) Types of specific suicide prevention procedures (e.g., assessment of risk at intake, special inmate counseling or psychiatric services, monitoring of high risk inmates; suicide, etc.);

(f) From July 1 of the previous year to June 30 of the current collection year, whether facility has inmate work assignments and the types of assignments;

(g) From July 1 of the previous year to June 30 of the current collection year, counseling or special programs available to confined persons either on or off facility grounds (e.g., drug/alcohol counseling/awareness, domestic violence counseling, etc.);

(h) From July 1 of the previous year to June 30 of the current collection year, educational programs available to confined persons either on or off facility grounds.

For CJ–5C (SLJ form), a one-time collection between 2010 and 2012 will be administered to 210 respondents from the largest county and city jails. Information on mental and medical health and substance abuse treatment services issues will be requested:

Mental health treatment and services

(a) During the 31-day period in (month), the number of new admissions to the jail facility that are male and female, adult and juvenile inmates;

(b) Whether the jail facility conducts mental health screening at intake, the type(s) of screening instruments, and when does the screening process occur (e.g., within 24 hours of booking, in an emergency or crisis situation, etc.);

(c) Who conducts the mental health screener (e.g., correctional staff, mental health professional, etc.);

(d) During the 31-day period in (month), the number of persons with new admissions to the jail facility that were screened at intake for mental health disorders or emotional problems and the number determined to have a major depressive symptoms, major manic symptoms, major psychotic symptoms;

(e) What services to inmates are provided when the intake screening reveals a mental health disorder (e.g., referral for further testing/assessment, contacted a mental health professional, moved to a special housing facility and under special observation, etc.);

(f) During the 31-day period in (month), the number of inmates who received mental health treatment and the type(s) of treatment;

(g) Designated area with a beds allocated under the authority of a physician with mental health services and 24 hour nursing coverage? How many beds are for inmates and the number of beds occupied;

(h) Jail facility discharge plan for inmates who needed mental health care? Who provides this service linkage? What agencies administer this service? What agency pays for this service.

Substance abuse treatment and services and other programs

(i) Whether the jail facility conducts medical detoxification on confined persons and the number of persons who were being detoxified;

(j) During the 31-day period in (month), the number of persons with new admissions to the jail facility that:

(1) Were tested for the use of drugs at intake and how many tested positive;

(2) Participated in counseling or special programs (e.g., drug/alcohol counseling/awareness, domestic violence counseling, etc.);

(3) Participated in an education program (e.g., basic adult education (ABE), GED program, and college level classes, etc.).

(5) An estimate of the total number of respondents and the amount of time estimated for an average respondent to respond: Six hundred and forty-six respondents each taking an average 75 minutes to respond for collection forms CJ–5 and CJ–5A (regular ASJ form), and CJ–5B (SJIC form). Three hundred and seventy-three respondents each taking 120 minutes to respond for collection forms CJ–5 and CJ–5A (ASJ long form). Eighty-five respondents each taking an average of 30 minutes to respond for collection form CJ–5B Addendum

(SJIC). Two hundred and ten respondents each taking an average of 4 hours to respond for collection form CJ–5C (SLJ form).

(6) An estimate of the total public burden (in hours) associated with the collection: There are an estimated 2,436 total burden hours associated with this collection.

If additional information is required contact: Lynn Bryant, Department Clearance Officer, United States Department of Justice, Justice Management Division, Policy and Planning Staff, Patrick Henry Building, Suite 1600, 601 D Street, NW., Washington, DC 20530.

Dated: January 5, 2010.

Lynn Bryant,

Department Clearance Officer, PRA, U.S. Department of Justice.

[FR Doc. 2010–170 Filed 1–8–10; 8:45 am]

BILLING CODE 4410–18–P

DEPARTMENT OF JUSTICE

Notice of Lodging of Proposed Consent Decree Under the Comprehensive Environmental Response Compensation and Liability Act

Notice is hereby given that on December 23, 2009, a proposed Consent Decree was filed with the United States District Court for the District of Idaho in *United States* v. *Union Pacific Railroad Company,* No. 2:09–00392 (D. Idaho). The proposed Consent Decree entered into by the United States, the State of Idaho, and two railroads (Union Pacific Railroad Company and BNSF Railway Company), resolves the United States' claims against the railroads under Sections 106 and 107 of the Comprehensive Environmental Response, Compensation, and Liability Act, 42 U.S.C. 9606, 9607. Under the terms of the Consent Decree, Union Pacific Railroad Company will pay the United States $655,094 and BNSF Railway Company $427,000 in past costs incurred in addressing the contamination at the Wallace Yard and Spur Lines Site within the larger Bunker Hill Mining Site in the C'ouer d'Alene Basin of Idaho. In addition to payments for past response costs, the Consent Decree requires the railroads to perform certain clean up actions selected by EPA and identified in the Statement of Work attached to the Consent Decree. Further, the settlement requires the railroads to contribute to the Basin-wide cleanup program to address contamination of residential properties.

The Department of Justice will receive comments relating to the proposed Consent Decree for a period of thirty (30) days from the date of this publication. Comments should be addressed to the Assistant Attorney General, Environment and Natural Resources Division, and either e-mailed to *pubcomment-ees.enrd@usdoj.gov* or mailed to P.O. Box 7611, U.S. Department of Justice, Washington, DC 20044–7611, and should refer to *United States et al.* v. *City of West Point, et al.,* DJ Ref. No. 90–5–1–1–09326.

The proposed Agreement may be examined at the Office of the United States Attorney for the District of Idaho, Washington Group Plaza, 800 Park Boulevard, Suite 600, Boise, ID 83712–9903, and at the Environmental Protection Agency, Region 9, 1200 Sixth Avenue, Seattle, Washington 98101. During the public comment period, the proposed Agreement may also be examined on the following Department of Justice Web site, *http://www.usdoj.gov/enrd/Consent_Decrees.html.* A copy of the proposed Agreement may also be obtained by mail from the Consent Decree Library, P.O. Box 7611, U.S. Department of Justice, Washington, DC 20044–7611 or by faxing or e-mailing a request to Tonia Fleetwood (*tonia.fleetwood@usdoj.gov*), fax no. (202) 514–0097, phone confirmation number (202) 514–1547. In requesting a copy from the Consent Decree Library, please enclose a check in the amount of $42.00 (25 cents per page reproduction cost) payable to the U.S. Treasury.

Maureen Katz,

Assistant Section Chief, Environmental Enforcement Section, Environment and Natural Resources Division.

[FR Doc. 2010–159 Filed 1–8–10; 8:45 am]

BILLING CODE 4410–15–P

DEPARTMENT OF JUSTICE

Notice of Lodging of Consent Decree Under the Comprehensive Environmental Response, Compensation and Liability Act

Notice is hereby given that on January 4, 2010, a proposed Consent Decree in *United States* v. *Highview Gardens, Inc.,* Civil Action No. 2:09-cv-02827–PD was lodged with the United States District Court for the Eastern District of Pennsylvania.

In this action the United States sought reimbursement of response costs incurred in connection with property known as the Allied/Recticon Superfund Site (the "Site"), located in Parker Ford, East Coventry Township, Chester County, Pennsylvania. The Consent Decree obligates the Settling Defendant to reimburse $300,000 of the United States' response costs paid in connection with the Site through the date of entry of the Consent Decree.

The Department of Justice will receive for a period of thirty (30) days from the date of this publication comments relating to the Consent Decree. Comments should be addressed to the Assistant Attorney General, Environment and Natural Resources Division, and either e-mailed to *pubcomment-ees.enrd@usdoj.gov* or mailed to P.O. Box 7611, U.S. Department of Justice, Washington, DC 20044–7611, and should refer to *United States* v. *Highview Gardens, Inc.,* Civil Action No. 2:09–cv–02827–PD, D.J. Ref. 90–11–2–902/4.

The Consent Decree may be examined at the Office of the United States Attorney, Eastern District of Pennsylvania, 615 Chestnut Street, Suite 1250, Philadelphia, PA 19106, and at U.S. EPA Region 3. During the public comment period, the Consent Decree may also be examined on the following Department of Justice Web site *http://www.usdoj.gov/enrd/Consent_Decrees.html.* A copy of the Consent Decree may also be obtained by mail from the Consent Decree Library, P.O. Box 7611, U.S. Department of Justice, Washington, DC 20044–7611 or by faxing or e-mailing a request to Tonia Fleetwood (*tonia.fleetwood@usdoj.gov*), fax no. (202) 514–0097, phone confirmation number (202) 514–1547. In requesting a copy from the Consent Decree Library, please enclose a check in the amount of $5.75 (@ 25 cents per page reproduction cost) payable to the U.S. Treasury or, if by e-mail or fax, forward a check in that amount to the Consent Decree Library at the stated address.

Maureen Katz,

Assistant Chief, Environmental Enforcement Section, Environment and Natural Resources Division.

[FR Doc. 2010–175 Filed 1–8–10; 8:45 am]

BILLING CODE 4410–15–P

DEPARTMENT OF JUSTICE

Notice of Lodging of Consent Decree Under Comprehensive Environmental Response, Compensation and Liability Act

Under 28 CFR 50.7, notice is hereby given that on January 4, 2010, a proposed Consent Decree in *United States* v. *Anderson & Sons, Inc.,* No. 3:09–cv–2096, was lodged with the United States District Court for the District of Connecticut.

The proposed Consent Decree resolves claims of the United States, on behalf of the Environmental Protection Agency ("EPA"), under the Comprehensive Environmental Response, Compensation, and Liability Act ("CERCLA"), 42 U.S.C. 9601 *et seq.,* in connection with the Solvents Recovery Service of New England, Inc. Superfund Site ("SRS Site") and the Old Southington Landfill Superfund Site ("OSL Site"), both in Southington, Connecticut, against the defendant.

The proposed Consent Decree requires Anderson & Sons, Inc. to pay $53,290 for the SRS Site and $19,710 for the OSL Site.

The Consent Decree provides that the settlor is entitled to contribution protection as provided by Section 113(f)(2) of CERCLA, 42 U.S.C. 9613(f)(2), for matters addressed by the settlement.

The Department of Justice will receive for a period of 30 days from the date of this publication comments relating to the proposed Consent Decree. Comments should be addressed to the Assistant Attorney General of the Environment and Natural Resources Division, Department of Justice, Washington, DC 20530, and either e-mailed to *pubcomment-ees.enrd@usdoj.gov* or mailed to P.O. Box 7611, U.S. Department of Justice, Washington, DC 20044–7611, and should refer to *United States* v. *Anderson & Sons, Inc.,* No. 3:09–cv–2096, D.J. No. 90–7–1–23/11. Commenters may request an opportunity for a public meeting in the affected area, in accordance with Section 7003(d) of RCRA, 42 U.S.C. 6973(d).

The proposed Consent Decree may be examined at the Office of the United States Attorney, District of Connecticut, 157 Church Street, New Haven, CT 06510. During the public comment period, the proposed Consent Decree may also be examined on the following Department of Justice Web site, *http://www.usdoj.gov/enrd/Consent_Decrees.html.* Copies of the proposed Consent Decree may be obtained by mail from the Consent Decree Library, P.O. Box 7611, U.S. Department of Justice, Washington, DC 20044–7611 or by faxing or e-mailing a request to Tonia Fleetwood (*tonia.fleetwood@usdoj.gov*), fax no. (202) 514–0097, phone confirmation number (202) 514–1547. In requesting a copy of the proposed Consent Decree, please enclose a check in the amount of $9.50 (25 cent per page reproduction cost), payable to the U.S. Treasury.

Maureen Katz,

Assistant Section Chief, Environmental Enforcement Section, Environment and Natural Resources Division.

[FR Doc. 2010–160 Filed 1–8–10; 8:45 am]

BILLING CODE 4410–15–P

DEPARTMENT OF JUSTICE

Notice of Lodging of Consent Decree Pursuant to The Comprehensive Environmental Response Compensation and Liability Act (CERCLA)

Notice is hereby given that on January 5, 2010, a proposed Consent Decree in *United States* v. *Louis Vinagro Jr.,* CIV No. 07–264S (D.R.I.) was lodged with the United States District Court for the District of Rhode Island.

The proposed Consent Decree is between the United States on behalf of the United States Environmental Protection Agency ("EPA") and Louis Vinagro, Jr. ("Defendant") The proposed Consent Decree resolves claims against the Defendant under Section 107 of the Comprehensive Environmental Response, Compensation, and Liability Act, as amended ("CERCLA"), 42 U.S.C. 9607 related to the Green Hill Road Superfund Site in Johnston, Rhode Island. Under the proposed Consent Decree, the Defendant agrees to sell property he owns and pay to the United States from the proceeds $1,975,000.

The Department of Justice will receive for a period of thirty (30) days from the date of this publication comments relating to the Consent Decree. Comments should be addressed to the Assistant Attorney General, Environment and Natural Resources Division, and either e-mailed to *pubcomment-ees.enrd@usdoj.gov* or mailed to P.O. Box 7611, U.S. Department of Justice, Washington, DC 20044–7611, and should refer to *United States* v. *Louis Vinagro Jr.,* CIV No. 07–264S (D.R.I.), D.J. Ref. 90–11–2–407/5.

The proposed Consent Decree may be examined at the Office of the United States Attorney, District of Rhode Island, 50 Kennedy Plaza, 8th Floor, Providence, RI 02903 and at the United States Environmental Protection Agency, Region I, 5 Post Office Square, Suite 100, Boston, MA 02109–3912. During the public comment period, the proposed Consent Decree may also be examined on the following Department of Justice Web site, *http://www.usdoj.gov/enrd/Consent_Decrees.html.* A copy of the proposed Consent Decree may be obtained by mail from the Consent Decree Library, P.O. Box 7611, U.S. Department of Justice, Washington, DC 20044–7611 or by faxing or e-mailing a request to Tonia Fleetwood (*tonia.fleetwood@usdoj.gov*), fax no. (202) 514–0097, phone confirmation number (202) 514–1547. In requesting a copy from the Consent Decree Library, please enclose a check in the amount of $9.75 (25 cents per page reproduction cost) payable to the U.S. Treasury or, if by e-mail or fax, forward a check in that amount to the Consent Decree Library at the stated address.

Maureen Katz,

Assistant Section Chief, Environmental Enforcement Section, Environment and Natural Resources Division.

[FR Doc. 2010–270 Filed 1–8–10; 8:45 am]

BILLING CODE 4410–15–P

DEPARTMENT OF JUSTICE

Notice of Lodging of Consent Decrees Under The Comprehensive Environmental Response, Compensation, and Liability Act (CERCLA)

Notice is hereby given that on December 18, 2009, two proposed Consent Decrees in the case of *U.S.* v. *Mascot Mines, Inc., et al.*, Civil Action No. 08–383–EJL, with Defendants Mascot Mines, Inc. and Nabob Silver-Lead Company and with Defendant United Resource Holdings Group, Inc., were lodged with the United States District Court for the District of Idaho.

The United States filed a complaint in September 2008 alleging that the defendants are liable pursuant to Section 107(a) of CERCLA for response costs incurred and to be incurred by the United States in connection with Operable Unit Three of the Bunker Hill Mining and Metallurgical Complex Superfund Site in northern Idaho. The proposed Consent Decrees grant each settling defendant a covenant not to sue for response costs, as well as natural resource damages, in connection with the Site. The Coeur d'Alene Tribe is a co-trustee of injured natural resources at the Site and a party to the proposed Consent Decrees. The settlements are based on an analysis of each settling defendant's limited ability to pay and require payments totaling $90,000. The settlements also require assignment of interest in insurance policies to a trust, for the benefit of EPA and the natural resource trustees, and payment of two percent of net smelter returns generated from any future mining activities.

For thirty (30) days after the date of this publication, the Department of

Justice will receive comments relating to the Consent Decrees. Comments should be addressed to the Assistant Attorney General, Environment and Natural Resources Division, and either e-mailed to *pubcomment-ees.enrd@usdoj.gov* or mailed to P.O. Box 7611, U.S. Department of Justice, Washington, DC 20044–7611. In either case, the comments should refer to *U.S.* v. *Mascot Mines, Inc., et al.*, D.J. Ref. No. 90–11–3–128/7.

During the comment period, the Consent Decrees may be examined on the following Department of Justice Web site: *http://www.usdoj.gov/enrd/Consent_Decrees.html.* A copy of the Consent Decrees may also be obtained by mail from the Consent Decree Library, P.O. Box 7611, U.S. Department of Justice, Washington, DC 20044–7611, or by faxing or e-mailing a request to Tonia Fleetwood (*tonia.fleetwood@usdoj.gov*), fax no. (202) 514–0097, phone confirmation number (202) 514–1547. In requesting a copy from the Consent Decree Library, please enclose a check in the amount of $32.25 (25 cents per page reproduction cost) payable to the United States Treasury or, if by e-mail or fax, forward a check in that amount to the Consent Decree Library at the stated address.

Maureen Katz,

Assistant Chief, Environmental Enforcement Section, Environment and Natural Resources Division.

[FR Doc. 2010–269 Filed 1–8–10; 8:45 am]

BILLING CODE 4410–15–P

DEPARTMENT OF LABOR

Office of the Secretary

Submission for OMB Emergency Review: Comment Request

January 5, 2010.

The Department of Labor has submitted the following information collection request (ICR), utilizing emergency review procedures, to the Office of Management and Budget (OMB) for review and clearance in accordance with the Paperwork Reduction Act of 1995 (Pub. L. 104–13, 44 U.S.C. Chapter 35) and 5 CFR 1320.13. OMB approval has been requested by January 19, 2010. A copy of this ICR, with applicable supporting documentation; including among other things a description of the likely respondents, proposed frequency of response, and estimated total burden may be obtained from the RegInfo.gov Web site at *http://www.reginfo.gov/public/do/PRAMain* or by contacting Darrin King on 202–693–4129 (this is not a toll-free number)/*e-mail: DOL_PRA_PUBLIC@dol.gov.* Interested parties are encouraged to send comments to the Office of Information and Regulatory Affairs, *Attn:* OMB Desk Officer for the Department of Labor—Employee Benefits Security Administration (EBSA), Office of Management and Budget, Room 10235, Washington, DC 20503, *Telephone:* 202–395–7316/*Fax:* 202–395–6974 (these are not toll-free numbers), *E-mail: OIRA_submission@omb.eop.gov.* Comments and questions about the ICR listed below should be received 5 days prior to the requested OMB approval date. Please note, an additional opportunity to comment will be provided when this ICR is resubmitted to OMB under standard PRA clearance procedures and pursuant to 5 CFR 1320.10.

The OMB is particularly interested in comments which:

- Evaluate whether the proposed collection of information is necessary for the proper performance of the functions of the agency, including whether the information will have practical utility;
- Evaluate the accuracy of the agency's estimate of the burden of the proposed collection of information, including the validity of the methodology and assumptions used;
- Enhance the quality, utility, and clarify of the information to be collected; and
- Minimize the burden of the collection of information on those who are to respond, including through the use of appropriate automated, electronic, mechanical, or other technological collection techniques or other forms of information technology, e.g., permitting electronic submissions of responses.

Agency: Employee Benefits Security Administration.

Title of Collection: Model Employer CHIP Notice.

OMB Control Number: 1210–NEW.

Frequency of Collection: On occasion.

Affected Public: Individuals or households; Business or other for-profit; Not-for-profit institutions.

Total Estimated Number of Respondents: 7,056,000.

Total Estimated Number of Responses: 203,794,701.

Total Estimated Annual Burden Hours: 1,053,000.

Total Net Estimated Annual Costs Burden (other than hourly costs): $25,271,000.

Description: On February 4, 2009, President Obama signed the Children's Health Insurance Program Reauthorization Act of 2009 (CHIPRA, Pub. L. 111–3). Under ERISA section 701(f)(3)(B)(i)(I), PHS Act section 2701(f)(3)(B)(i)(I), and section 9801(f)(3)(B)(i)(I) of the Internal Revenue Code, as added by CHIPRA, an employer that maintains a group health plan in a State that provides medical assistance under a State Medicaid plan under title XIX of the Social Security Act (SSA), or child health assistance under a State child health plan under title XXI of the SSA, in the form of premium assistance for the purchase of coverage under a group health plan, is required to make certain disclosures. Specifically, the employer is required to notify each employee of potential opportunities currently available in the State in which the employee resides for premium assistance under Medicaid and CHIP for health coverage of the employee or the employee's dependents.

ERISA section 701(f)(3)(B)(i)(II) requires the Department of Labor to provide employers with model language for the Employer CHIP Notices to enable them to timely comply with this requirement. The Model Employer CHIP Notice is required to include information on how an employee may contact the State in which the employee resides for additional information regarding potential opportunities for premium assistance, including how to apply for such assistance.

Section 311(b)(1)(D) of CHIPRA provides that the Departments of Labor and Health and Human Services shall develop the initial Model Employer CHIP Notice under ERISA section 701(f)(3)(B)(i)(II), and the Department of Labor shall provide such notices to employers, by February 4, 2010. Moreover, each employer is required to provide the initial annual notices to such employer's employees beginning with the first plan year that begins after the date on which the initial model notices are first issued. The ICR relates to the Model Employer Chip Notice.

Why are we requesting Emergency Processing? If the Department were required to comply with standard PRA clearance procedures, it would not be able to publish the model notices on a timely basis.

Dated: January 5, 2010.

Darrin A. King,

Departmental Clearance Officer.

[FR Doc. 2010–154 Filed 1–8–10; 8:45 am]

BILLING CODE 4510–29–P

DEPARTMENT OF LABOR

Office of the Secretary

Submission for OMB Review: Comment Request

January 5, 2010.

The Department of Labor (DOL) hereby announces the submission of the following public information collection request (ICR) to the Office of Management and Budget (OMB) for review and approval in accordance with the Paperwork Reduction Act of 1995 (Pub. L. 104–13, 44 U.S.C. chapter 35). A copy of this ICR, with applicable supporting documentation; including among other things a description of the likely respondents, proposed frequency of response, and estimated total burden may be obtained from the RegInfo.gov Web site at *http://www.reginfo.gov/public/do/PRAMain* or by contacting Darrin King on 202–693–4129 (this is not a toll-free number)/e-mail: *DOL_PRA_PUBLIC@dol.gov*.

Interested parties are encouraged to send comments to the Office of Information and Regulatory Affairs, Attn: OMB Desk Officer for the Department of Labor—Bureau of Labor Statistics (BLS), Office of Management and Budget, Room 10235, Washington, DC 20503, *Telephone:* 202–395–7316/*Fax:* 202–395–5806 (these are not toll-free numbers), *E-mail:* *OIRA_submission@omb.eop.gov* within 30 days from the date of this publication in the **Federal Register.** In order to ensure the appropriate consideration, comments should reference the OMB Control Number (see below).

The OMB is particularly interested in comments which:

- Evaluate whether the proposed collection of information is necessary for the proper performance of the functions of the agency, including whether the information will have practical utility;
- Evaluate the accuracy of the agency's estimate of the burden of the proposed collection of information, including the validity of the methodology and assumptions used;
- Enhance the quality, utility, and clarity of the information to be collected; and
- Minimize the burden of the collection of information on those who are to respond, including through the use of appropriate automated, electronic, mechanical, or other technological collection techniques or other forms of information technology, *e.g.,* permitting electronic submission of responses.

Agency: Bureau of Labor Statistics.

Type of Review: Revision of a currently approved collection.

Title of Collection: The Consumer Expenditure Surveys: The Quarterly Interview and the Diary.

OMB Control Number: 1220–0050.

Affected Public: Individuals or households.

Total Estimated Number of Respondents: 8,825.

Total Estimated Annual Burden Hours: 72,614.

Total Estimated Annual Costs Burden (does not include hourly wage costs): $0.

Description: The Consumer Expenditure Surveys are used to gather information on expenditures, income, and other related subjects. These data are used to periodically update the national Consumer Price Index. In addition the data are used by a variety of researchers in academia, government agencies, and the private sector. The data are collected from a national probability sample of households designed to represent the total civilian non-institutional population. For additional information, see related notice published in the **Federal Register** on October 1, 2009 (Vol. 74, page 50822).

Darrin A. King,

Departmental Clearance Officer.

[FR Doc. 2010–202 Filed 1–8–10; 8:45 am]

BILLING CODE 4510–24–P

DEPARTMENT OF LABOR

Office of the Secretary

Submission for OMB Review: Comment Request

January 5, 2010.

The Department of Labor (DOL) hereby announces the submission of the following public information collection request (ICR) to the Office of Management and Budget (OMB) for review and approval in accordance with the Paperwork Reduction Act of 1995 (Pub. L. 104–13, 44 U.S.C. chapter 35). A copy of this ICR, with applicable supporting documentation; including among other things a description of the likely respondents, proposed frequency of response, and estimated total burden may be obtained from the RegInfo.gov Web site at *http://www.reginfo.gov/public/do/PRAMain* or by contacting Darrin King on 202–693–4129 (this is not a toll-free number)/e-mail: *DOL_PRA_PUBLIC@dol.gov.*

Interested parties are encouraged to send comments to the Office of Information and Regulatory Affairs, *Attn:* OMB Desk Officer for the Department of Labor—Employment and Training Administration (ETA), Office of Management and Budget, Room 10235, Washington, DC 20503, *Telephone:* 202–395–7316/*Fax:* 202–395–5806 (these are not toll-free numbers), E-mail: *OIRA_submission@omb.eop.gov* within 30 days from the date of this publication in the **Federal Register.** In order to ensure the appropriate consideration, comments should reference the OMB Control Number (*see* below).

The OMB is particularly interested in comments which:

- Evaluate whether the proposed collection of information is necessary for the proper performance of the functions of the agency, including whether the information will have practical utility;
- Evaluate the accuracy of the agency's estimate of the burden of the proposed collection of information, including the validity of the methodology and assumptions used;
- Enhance the quality, utility, and clarity of the information to be collected; and
- Minimize the burden of the collection of information on those who are to respond, including through the use of appropriate automated, electronic, mechanical, or other technological collection techniques or other forms of information technology, *e.g.,* permitting electronic submission of responses.

Agency: Employment and Training Administration.

Type of Review: Extension without change of a currently approved collection.

Title of Collection: Trade Adjustment Assistance/NAFTA Financial Status/Request for Funds Report.

OMB Control Number: 1205–0275.

Agency Form Number: ETA–9117.

Affected Public: State Governments.

Total Estimated Number of Respondents: 25.

Total Estimated Annual Burden Hours: 50.

Total Estimated Annual Costs Burden (does not include hour costs): $0.

Description: The Department of Labor requires financial data for the Trade Adjustment Assistance (TAA) and NAFTA–TAA programs administered by States. The required data are necessary in order to meet statutory requirements prescribed in the Trade Act of 1974 (section 250 (a) Subchapter D, Chapter 2, Title II), as amended by the American Recovery and Reinvestment Act of 2009; the Omnibus Trade and Competitiveness Act of 1988 and the North American Free Trade Act. For additional information, *see* related notice published in the **Federal Register**

on September 29, 2009 (Volume 74, page 49893).

Darrin A. King,

Departmental Clearance Officer.

[FR Doc. 2010–177 Filed 1–8–10; 8:45 am]

BILLING CODE 4510–FN–P

NUCLEAR REGULATORY COMMISSION

[NRC–2010–0007]

Final Memorandum of Understanding Between the U.S. Nuclear Regulatory Commission and the North American Electric Reliability Corporation

AGENCY: Nuclear Regulatory Commission.

ACTION: Notice.

FOR FURTHER INFORMATION CONTACT: Kenneth Miller, Electrical Engineer, Electrical Engineering Branch, Division of Engineering, Office of Nuclear Reactor Regulation, U.S. Nuclear Regulatory Commission, Washington, DC 20555. *Telephone:* (301) 415–3152; *fax number:* (301) 415–3031; *e-mail: kenneth.miller2@nrc.gov.*

SUPPLEMENTARY INFORMATION:

I. Introduction

This notice is to advise the public of the issuance of a Final Memorandum of Understanding (MOU) between the U.S. Nuclear Regulatory Commission (NRC) and the North American Electric Reliability Corporation (NERC). The purpose of this MOU is to set forth and coordinate the roles and responsibilities of each organization as they relate to the application of their respective cyber security requirements for the protection of digital assets at commercial nuclear power plants operating in the USA.

II. Effective Date

This MOU is effective December 30, 2009.

III. Further Information

Documents related to this action are available electronically at the NRC's Electronic Reading Room at *http://www.nrc.gov/reading-rm/adams.html.* From this site, you can access the NRC's Agencywide Documents Access and Management System (ADAMS), which provides text and image files of NRC's public documents. The ADAMS accession number for the document related to this notice is: Memorandum of Understanding between the NRC and NERC ML093510905. If you do not have access to ADAMS or if there are problems in accessing the documents located in ADAMS, contact the NRC Public Document Room (PDR) Reference staff at 1–800–397–4209, 301–415–4737 or by e-mail to *pdr@nrc.gov.*

These documents may also be viewed electronically on the public computers located at the NRC's Public Document Room (PDR), O 1 F21, One White Flint North, 11555 Rockville Pike, Rockville, MD 20852. The PDR reproduction contractor will copy documents for a fee.

Dated at Rockville, Maryland this 5th day of January, 2010.

For the Nuclear Regulatory Commission.

George A Wilson,

Chief, Electrical Engineering Branch, Division of Engineering, Office of Nuclear Reactor Regulation.

Memorandum of Understanding Between the U.S. Nuclear Regulatory Commission and the North American Electric Reliability Corporation

I. Purpose

1. This Memorandum of Understanding (MOU) is entered into by the U.S. Nuclear Regulatory Commission (NRC) and the North American Electric Reliability Corporation (NERC) (hereafter "Party" or "Parties").

2. Consistent with their statutory authority and regulations, the NRC and NERC each have responsibility for establishing and enforcing cyber security requirements at commercial nuclear power plants operating in the United States of America (USA). The NRC's primary focus is on the prevention of radiological sabotage (*i.e.,* significant core damage) that could result in harm to public health and safety or the environment or have an adverse impact upon the common defense and security of the USA. NERC's primary focus is on the reliability of the bulk power system (BPS). It accomplishes this in part by enforcing compliance with applicable NERC Reliability Standards, including, but not limited to, the Critical Infrastructure Protection (CIP) Reliability Standards.

3. The purpose of this MOU is to set forth and coordinate the roles and responsibilities of each organization as they relate to the application of their respective cyber security requirements for the protection of digital assets at commercial nuclear power plants operating in the USA. This cooperation will ensure that the common responsibilities of each organization are achieved in the most efficient and effective manner without diminishing or interfering with their respective responsibilities and authorities. The goal of this cooperation is to maintain the safety and security of commercial nuclear power plants operating in the USA while optimizing the reliability of the BPS to the maximum extent possible.

4. This memorandum supplements an existing Memorandum of Agreement (MOA) between the NRC and NERC dated July 10, 2007.

II. Roles and Responsibilities

1. *NRC:*

a. The NRC has statutory responsibility for licensing and regulating commercial nuclear facilities operating in the USA as well as the civilian use of byproduct, source, and special nuclear materials in order to protect public health and safety, promote the common defense and security, and protect the environment. Public Law 93–438, 88 Stat. 1233 (42 U.S.C. 5801 *et seq.*).

b. The NRC carries out its statutory responsibilities by promulgating regulations and issuing licenses, certificates and orders for commercial nuclear power plants and other nuclear facilities and materials in the USA.

c. The NRC has issued orders and promulgated regulations imposing cyber security requirements on commercial nuclear power plants under its jurisdiction. Portions of these facilities also fall under the concurrent jurisdiction of NERC's CIP reliability standards.

d. The NRC's cyber security regulations set forth at 10 CFR 73.54 govern digital systems and networks that can affect commercial nuclear power reactor safety, security, and emergency preparedness functions. Those regulations do not govern systems within nuclear facilities, such as those related to continuity of power that could not have an adverse impact on safety, security, or emergency preparedness functions.

2. *NERC:*

a. NERC has statutory responsibility for improving the reliability and security of the BPS in the United States. NERC conducts equivalent activities in Canada. NERC's authority and jurisdiction in the USA is set forth in the Federal Power Act pursuant to Title XII of the Energy Policy Act of 2005, FERC's implementing regulations at 18 CFR Part 39, and applicable FERC Orders, including but not limited to, the Electric Reliability Organization (ERO) Certification Order, Order Nos. 672, 693, 706 and 706–B. NERC is a not-for-profit, self-regulatory corporation.

b. NERC develops and enforces reliability standards; monitors the BPS; analyzes BPS events; assesses the adequacy of the BPS annually via a 10-year forecast and winter and summer forecasts; audits owners, operators, and users of the BPS; and educates and trains industry personnel.

III. NRC/NERC Consultations on the FERC Order 706–B Exception Process

1. On January 18, 2008, FERC issued Order No. 706 imposing eight NERC-developed cyber security CIP reliability standards on BPS owners, operators, and users. This Order exempted facilities regulated by the NRC from compliance with NERC's CIP standards.

2. On March 19, 2009, FERC issued Order No. 706–B, significantly narrowing the nuclear facilities exemptions from NERC's CIP standards in order to ensure comprehensive cyber security protection of appropriate digital assets at nuclear power plants. Order No. 706–B allows nuclear facilities to seek exceptions from NERC's CIP standards on a case-by-case basis for those digital assets subject to the NRC's cyber security requirements.

3. The NRC and NERC agree to cooperate regarding NERC's disposition of exception requests received from nuclear facilities subject to NERC's CIP standards. NERC

agrees to consult with the NRC on each request for an exception from NERC's CIP standards that NERC receives from a nuclear facility also regulated by the NRC. This cooperation and consultation will facilitate the proper characterization of digital assets as subject to either the NRC's cyber security requirements or NERC's CIP standards.

IV. Cyber Security Inspection Protocol

1. The NRC has regulatory responsibility for inspecting those digital assets, including digital control and data acquisition systems and networks, which can affect safety, security, and emergency preparedness functions of a nuclear power plant. The NRC will inspect such systems to ensure compliance with the NRC's cyber security requirements.

2. The NRC does not have regulatory responsibility to inspect those digital assets unrelated to the safety, security or emergency preparedness functions of a nuclear power plant, such as those digital control and data acquisition systems related to continuity of power, unless those systems can have an adverse impact on safety, security, or emergency preparedness functions.

3. NERC has regulatory responsibility for inspecting digital assets related to continuity of power for compliance with NERC's CIP standards.

4. The NRC and NERC agree to share any information discovered during the course of their respective inspections that they believe may be relevant to or have an adverse impact on any digital asset governed by the other Party's cyber security requirements.

5. The NRC and NERC agree to consult and coordinate to the maximum extent practicable on the process for conducting inspections to carry out activities contemplated under this MOU.

V. Information Sharing

1. The NRC and NERC recognize that the sharing of relevant information between the Parties may be necessary to implement the provisions of this MOU. Consistent with applicable laws and regulations, the NRC and NERC support the sharing of all information necessary to carry out the intent of this MOU. Accordingly, all relevant information will be shared with the other Party in a timely manner so that each Party can take appropriate action.

2. The NRC and NERC recognize that this MOU may require the sharing of sensitive information up to and including Safeguards Information (SGI) as defined in 10 CFR 73.2. The NRC and NERC agree to protect sensitive information received from the other party in accordance with all applicable laws and requirements, including all requirements governing access to and protection of SGI. NERC further agrees that it will not transmit any SGI received from the NRC to any third party, except for its Regional Entities pursuant to V.4 below, without the written consent of the NRC.

3. NERC agrees to adhere to procedures governing the sharing, possession and handling of SGI under this MOU in accordance with the Appendix to this MOU, entitled, "Procedures Governing Access to and Possession of Safeguards Information." NERC further agrees to develop, implement, and maintain an SGI program in accordance with applicable requirements and the Appendix to this MOU.

4. NRC and NERC recognize that NERC has delegated, by contract, certain authority to eight Regional Entities to assist NERC in carrying out NERC's compliance and enforcement program and that it may be necessary for NERC to share certain sensitive information with those Regional Entities in the process of carrying out the compliance and enforcement program. With respect to access to and protection of SGI, those eight Regional Entities will be considered to be contractors of NERC. NERC agrees that it will adhere to the procedures governing the sharing, possession and handling of SGI in accordance with the Appendix to this MOU entitled, "Procedures Governing Access to and Possession of Safeguards Information" for any SGI to which Regional Entities are given access.

VI. Enforcement Actions

1. Nothing in this MOU is intended to limit the authority of the NRC or NERC to take enforcement action consistent with their statutory authority and regulations.

2. The NRC and NERC agree that the NRC will have sole responsibility for taking enforcement action because of a violation involving a digital asset subject to the NRC's cyber security requirements. The NRC shall inform NERC of any enforcement actions that it plans to take as a result of a violation of NRC cyber security requirements.

3. The NRC and NERC agree that NERC will have sole responsibility for taking enforcement action because of a violation involving a digital asset subject to NERC's CIP standards. NERC shall inform the NRC of any enforcement actions that it plans to take as a result of a violation of NERC's CIP standards.

4. In those situations where a cyber security incident at a nuclear power plant results in violations of both the NRC's and NERC's requirements, the NRC and NERC agree to consult and coordinate on any enforcement actions to be taken.

5. If NERC considers imposing remedial action directives or sanctions on a nuclear power plant, NERC agrees to consult in advance with the NRC to ensure that the proposed action will not adversely affect nuclear safety, security or emergency preparedness.

6. The NRC and NERC agree to coordinate on any public announcements of enforcement actions taken as a result of any violation of their respective cyber security requirements.

VII. Points of Contact

The following are designated points of contact for carrying out the routine administration of matters arising under this MOU:

1. The resolution of policy issues concerning organizational jurisdiction and operational relations will be coordinated by the NRC's Executive Director for Operations and NERC's Chief Executive Officer. Appropriate points of contact will be established.

2. The NRC's Office of Enforcement (OE) and NERC's Compliance Department shall coordinate the resolution of issues involving enforcement actions taken by one or both parties at an NRC-licensed nuclear power plant. Appropriate OE and Compliance Program points of contact will be established.

VIII. Administrative Matters

1. This MOU shall become effective upon signing by all of the Parties and shall remain in effect for five years from the date of signing unless terminated in accordance with the procedures set forth below.

2. This MOU may be modified or amended by written mutual agreement of the Parties.

3. Any Party may terminate this MOU by providing written notice of its intent to terminate the MOU to the other Party at least 180 days in advance of the effective date of termination.

4. This MOU shall not be construed to be or create a private right of action for or by any person or entity.

5. This MOU does not commit or obligate appropriated funds. All activities undertaken to implement any responsibilities carried out pursuant to this MOU shall be subject to the availability of appropriated funds.

6. If any provision(s) of this MOU, or the application of any provision(s) to any person or entity, is held to be invalid, the remainder of this MOU and the application of any remaining provision(s) to any person or entity shall not be affected.

For the Nuclear Regulatory Commission.

Dated: December 30, 2009.

/RA Martin Virgilio for/

R. W. Borchardt,
Executive Director for Operations.

For the North American Electric Reliability Corporation.

Dated: December 30, 2009

Rick Sergel,
Chief Executive Officer and President.

Appendix

Procedures Governing Access to and Possession of Safeguards Information

It is possible that both the NRC and NERC may require access to Safeguards Information (SGI) to carry out their respective responsibilities under this Memorandum of Understanding (MOU). The NRC has promulgated detailed regulations in 10 CFR Part 73 governing access to and the handling of SGI. The definition of SGI is set forth at 10 CFR 73.2. This Appendix sets forth general principles and procedures governing access to and the handling of SGI for purposes of carrying out this MOU. To the extent that any of the principles and procedures set forth in this Appendix conflict with the requirements set forth in 10 CFR Part 73, the NRC and NERC agree that the regulatory requirements set forth in Part 73 shall take precedence over this MOU.

SGI is a special category of sensitive unclassified information protected from unauthorized disclosure under Section 147 of the Atomic Energy Act of 1954 (AEA), as amended. Although SGI is sensitive unclassified information, it is handled and protected more like Classified National

Security Information than like other sensitive unclassified information. Information designated as SGI must be withheld from public disclosure and must be physically controlled and protected to prevent any unauthorized disclosure. The requirements set forth in 10 CFR Part 73 apply to any person, whether or not a licensee of the NRC, who produces, receives or acquires SGI.

All persons who have or have had access to SGI have a continuing obligation to protect SGI in order to prevent its inadvertent release and/or unauthorized disclosure. Violations of SGI handling and protection requirements, including the unauthorized disclosure of SGI, may result in the imposition of applicable civil and criminal penalties.

Information To Be Protected as Safeguards Information

Any documents provided to NERC by NRC that contain SGI will be designated in accordance with 10 CFR 73.22. Documents developed by NERC that contain SGI must also be designated and protected as SGI in accordance with 10 CFR 73.22. The NRC and NERC agree to comply with the requirements for protecting all information designated as SGI as set forth in 10 CFR 73.22(a).

Access to Safeguards Information

Generally, no person may have access to SGI unless the person has an established "need to know" for the information and has been determined to be "trustworthy and reliable." Typically, a determination of trustworthiness and reliability is based upon a background check, including at a minimum, a Federal Bureau of Investigation (FBI) criminal history records check (including verification of identity based on fingerprinting), employment history, education and personal references. The terms "background check," "need to know" and "trustworthy and reliable" are defined in 10 CFR 73.2. The NRC and NERC agree to comply with the requirements for access to SGI set forth in 10 CFR 73.22(b) and 10 CFR 73.57.

Reviewing Official

The determination that a NERC employee, consultant or contractor has a need for access to SGI (established "need to know" and is "trustworthy and reliable") must initially be made by an individual already authorized access to SGI. Accordingly, the NRC and NERC agree to implement the following procedures for granting NERC employees, consultants and contractors access to SGI for the purpose of carrying out this MOU.

NERC shall submit the name and fingerprints of at least one individual to the NRC who NERC has determined to be trustworthy and reliable and has a need to know SGI. NERC's trustworthiness and reliability determination shall be based, at a minimum, on all elements of a background check except for each individual's criminal history record. The NRC will conduct a criminal history record check based on each individual's fingerprints. Based upon the outcome of the criminal history record check, the NRC shall determine if the individual (or individuals if more than one name is submitted and approved) may have access to SGI and can serve as a reviewing official under this MOU. Upon approval by the NRC, this individual (or individuals if more than one name is submitted and approved) may serve as a reviewing official authorized to make SGI access authorization determinations for other NERC employees, consultants and contractors.

Individuals possessing an active Federal security clearance require no additional fingerprinting or background check for access to SGI, as this clearance meets the fingerprinting requirement and other elements of the background check, as prescribed in 10 CFR 73.22(b)(1). Such individuals must still meet the need to know requirement for access to SGI. However, when relying upon an existing active Federal security clearance to meet the SGI access requirements (except for the need to know determination), NERC should obtain and maintain a record of official notification stating that the individual possesses such a clearance.

Only NRC-approved reviewing officials shall be authorized to make SGI access determinations for other individuals who have been identified by NERC as having a need to know SGI. The reviewing official shall be responsible for determining that these individuals have a "need to know" for access to SGI to carry out their official duties under this MOU and for determining that these individuals are trustworthy and reliable. The reviewing official's determination of trustworthiness and reliability shall be based upon an adequate background check, including, at a minimum, an FBI criminal history records checks and fingerprinting. The reviewing official can only make SGI access determinations for other individuals, but cannot approve other individuals to act as reviewing officials.

NERC agrees that the reviewing official shall maintain secure and adequate records of each SGI access authorization determination. Such records shall be available to the NRC for inspection upon request.

Protection of Safeguards Information While in Use or Storage

SGI must be adequately protected while in use or storage to prevent its unauthorized release or disclosure. The NRC and NERC agree to comply with the requirements for protection of SGI while in use or storage set forth in 10 CFR 73.22(c).

Preparation and Marking of Documents or Other Matter

Documents and other matter must be prepared and conspicuously marked as SGI to ensure against unauthorized release or disclosure. The NRC and NERC agree to comply with the requirements for preparation and marking of documents and other material as set forth in 10 CFR 73.22(d).

Reproduction of Matter Containing Safeguards Information

SGI may be reproduced to the minimum extent necessary consistent with need without permission of the originator. The NRC and NERC agree to comply with the requirements for reproduction of documents and other material containing SGI as set forth in 10 CFR 73.22(e).

External Transmission of Documents and Material

Documents or other matter containing SGI when transmitted outside an authorized place of use or storage shall be enclosed in two sealed envelopes or wrappers and must not bear any markings or indication that the document contains SGI. The NRC and NERC agree to comply with the requirements for the external transmission of documents and other material containing SGI as set forth in 10 CFR 73.22(f).

Processing of Safeguards Information on Electronic Systems

SGI may not be transmitted by unprotected telecommunications circuits except under emergency or extraordinary conditions. SGI must be processed or produced on an electronic system that ensures the integrity of the information and prevents the unauthorized release or disclosure of SGI. The NRC and NERC agree to comply with the requirements for the processing of SGI on electronic systems as set forth in 10 CFR 73.22(g).

Removal from Safeguards Information Category

Documents containing SGI shall be removed from the SGI category (decontrolled) only after the NRC determines that the information no longer meets the criteria for designation as SGI. Organizations have the authority to make determinations that specific documents which they created no longer contain SGI and may be decontrolled. The NRC and NERC agree to comply with the requirements for removing information from the SGI category as set forth in 10 CFR 73.22(h).

Destruction of Matter Containing Safeguards Information

Documents containing SGI should be destroyed when no longer needed. The NRC and NERC agree to comply with the requirements for the destruction of documents and other material containing SGI as set forth in 10 CFR 73.22(i).

[FR Doc. 2010–229 Filed 1–8–10; 8:45 am]

BILLING CODE 7590–01–P

NUCLEAR REGULATORY COMMISSION

[NRC–2010–0003]

Implementation of Open Government Directive

AGENCY: Nuclear Regulatory Commission.

ACTION: Solicitation of public comment.

SUMMARY: In response to the Office of Management and Budget's (OMB) December 8, 2009, Open Government Directive, which helps to implement the President's January 21, 2009, Memorandum on Transparency and Open Government, the Nuclear Regulatory Commission (NRC) is requesting public comment to aid the

NRC's determination of what data sets it might be appropriate to publish online and what transparency, public participation, and collaboration improvements it might include as it drafts its Open Government Plan. The December 8, 2009, Directive generally instructs Federal agencies to identify and publish online in an open format at least three high-value data sets by January 22, 2010, and an Open Government Plan by April 7, 2010. While the Open Government Directive, by its terms, does not strictly apply to independent agencies like the NRC, the President has stated that independent agencies should comply with it. Accordingly, the NRC, in line with its longstanding commitment to openness and transparency, will endeavor to comply with the Open Government Directive and meet its deadlines. As part of this effort, the NRC will seek to identify and publish high-value data sets and draft an Open Government Plan, and the NRC is now inviting public comment on these matters. In addition, if a draft Open Government Plan is developed sufficiently prior to the April 7, 2010, deadline to allow time for meaningful public comment on the draft, the draft will be posted on the NRC's forthcoming Open Government Web page. Comments on the draft Plan could then be submitted to the NRC via the Open Government Web page.

DATES: Submit comments regarding publication of high-value data sets as soon as possible to assure consideration for purposes of the Open Government Directive's January 22, 2010, deadline. However, even comments that are received too late for meaningful consideration with respect to the January 22 deadline are nonetheless welcome, because the NRC may decide to publish additional data sets at later dates. Submit comments on the NRC's Open Government Plan by February 10, 2010. Comments on the Open Government Plan that are received after this date will be considered during the initial development of the Open Government Plan if it is practical to do so, but the NRC is able to assure consideration only for comments received on or before this date.

ADDRESSES: Please include Docket ID NRC–2010–0003 in the subject line of your comments. Comments submitted in writing or in electronic form will be posted on the NRC Web site and on the Federal rulemaking Web site *Regulations.gov*. Because your comments will not be edited to remove any identifying or contact information, the NRC cautions you against including any information in your submission that you do not want to be publicly disclosed.

The NRC requests that any party soliciting or aggregating comments received from other persons for submission to the NRC inform those persons that the NRC will not edit their comments to remove any identifying or contact information, and therefore, they should not include any information in their comments that they do not want publicly disclosed.

You may submit comments by any one of the following methods.

Federal Rulemaking Web site: Go to *http://www.regulations.gov* and search for documents filed under Docket ID NRC–2010–0003. Comments may be submitted electronically through this Web site. Address questions about NRC dockets to Carol Gallagher 301–492–3668; e-mail *Carol.Gallagher@nrc.gov*.

Mail comments to: Michael T. Lesar, Chief, Rulemaking and Directives Branch (RDB), Division of Administrative Services, Office of Administration, *Mail Stop:* TWB–05–B01M, U.S. Nuclear Regulatory Commission, Washington, DC 20555–0001, or by fax to RDB at (301) 492–3446.

You can access publicly available documents related to this notice using the following methods:

NRC's Public Document Room (PDR): The public may examine and have copied for a fee publicly available documents at the NRC's PDR, Room O1 F21, One White Flint North, 11555 Rockville Pike, Rockville, Maryland.

NRC's Agencywide Documents Access and Management System (ADAMS): Publicly available documents created or received at the NRC are available electronically at the NRC's Electronic Reading Room at *http://www.nrc.gov/reading-rm/adams.html*. From this page, the public can gain entry into ADAMS, which provides text and image files of the NRC's public documents. If you do not have access to ADAMS or if there are problems in accessing the documents located in ADAMS, contact the NRC's PDR reference staff at 1–800–397–4209, 301–415–4737, or by e-mail to *pdr.resource@nrc.gov*.

Federal Rulemaking Web site: Public comments and supporting materials related to this notice can be found at *http://www.regulations.gov* by searching on *Docket ID:* NRC–2010–0003.

NRC's Open Government Web page: Consistent with the Open Government Directive, the NRC plans to establish its Open Government Web page by February 6, 2010. The NRC's Open Government Web page will be located at *http://www.nrc.gov/open*. The NRC's Open Government Web page will offer opportunities to provide input to the NRC regarding the Open Government Plan, both before and after the plan is published.

FOR FURTHER INFORMATION CONTACT: James B. Schaeffer, Deputy Director, Office of Information Services, (301) 415–7330, *James.Schaeffer@nrc.gov*.

SUPPLEMENTARY INFORMATION: On December 8, 2009, the Director of the Office of Management and Budget issued an Open Government Directive, which helps to implement the President's January 21, 2009, Memorandum on Transparency and Open Government. According to the President's Memorandum, "independent agencies should comply with the Open Government Directive." Therefore, consistent with the NRC's longstanding commitment to openness and transparency, the NRC will endeavor to comply with the Open Government Directive and meet its deadlines. The Open Government Directive is available on the Internet at *http://www.whitehouse.gov/open/documents/open-government-directive,* and the President's January 21, 2009, Memorandum is available at *http://www.whitehouse.gov/the_press_office/Transparency_and_Open_Government.*

The Open Government Directive instructs Federal agencies to "identify and publish online in an open format at least three high-value data sets * * * and register those data sets via *Data.gov*. These must be data sets not previously available online or in a downloadable format." The Open Government Directive further states that "[h]igh-value information is information that can be used to increase agency accountability and responsiveness; improve public knowledge of the agency and its operations; further the core mission of the agency; create economic opportunity; or respond to need and demand as identified through public consultation." The due date for publication of data sets under the Open Government Directive is January 22, 2010. The NRC will seek to meet that deadline and is currently investigating whether it has data sets appropriate for publication that would be of high value to the public but that are not currently publicly available online.

The Open Government Directive also instructs agencies to develop and publish Open Government Plans. An agency's Open Government Plan, according to the Open Government Directive, "is the public roadmap that details how [the] agency will incorporate the principles of the President's January 21, 2009, Memorandum on Transparency and

Open Government into the core mission objectives of [the] agency." Open Government Plans are to set forth how each agency plans to improve transparency, public participation and collaboration. Open Government Plans also are to describe at least one "flagship initiative" the agency is already implementing or will implement to improve transparency, public participation, or collaboration. The Open Government Directive has established April 7, 2010, as the due date for publication of agency Open Government Plans, and the NRC will seek to meet that deadline. The Open Government Directive, available at the Internet address listed above, provides further details on the contents of agency Open Government Plans.

To aid the NRC's efforts to determine what data sets might be appropriate to publish and what transparency, public participation, and collaboration improvements it might include in its Open Government Plan, the NRC is soliciting public comments. Comments regarding publication of data sets are requested as soon as possible in light of the January 22, 2010, target date for publication of data sets. Please note that there is not yet a draft available of the NRC's Open Government Plan, and the NRC is not yet certain when a draft will be available. If a draft is developed sufficiently prior to the April 7, 2010, deadline to allow time for meaningful public comment on the draft, the draft will be posted on the NRC's forthcoming Open Government Web page, which, consistent with the Open Government Directive, the NRC plans to establish by February 6, 2010. The NRC's Open Government Web page will be located at *http://www.nrc.gov/open*. The NRC's Open Government Web page will also itself offer opportunities to provide input to the NRC regarding the Open Government Plan, both before and after the plan is published. Once the Open Government Plan is published, updates would be scheduled to occur every 2 years, and opportunities for public input would be provided in connection with these updates as well. With respect to the Open Government Plan, the NRC is providing a 30-day comment period.

Dated at Rockville, Maryland this 4th day of January, 2010.

For the Nuclear Regulatory Commission.

R. William Borchardt,

Executive Director for Operations.

[FR Doc. 2010–228 Filed 1–8–10; 8:45 am]

BILLING CODE 7590–01–P

SMALL BUSINESS ADMINISTRATION

[Disaster Declaration # 11996 and # 11997]

Florida Disaster # FL–00049

AGENCY: U.S. Small Business Administration.

ACTION: Notice.

Summary: This is a notice of an Administrative declaration of a disaster for the State of Florida dated 12/29/2009.

Incident: Severe Storms and Flooding.

Incident Period: 12/17/2009.

Effective Date: 12/29/2009.

Physical Loan Application Deadline Date: 03/01/2010.

Economic Injury (EIDL) Loan Application Deadline Date: 09/29/2010.

ADDRESSES: Submit completed loan applications to: U.S. Small Business Administration, Processing and Disbursement Center, 14925 Kingsport Road, Fort Worth, TX 76155.

FOR FURTHER INFORMATION CONTACT: A. Escobar, Office of Disaster Assistance, U.S. Small Business Administration, 409 3rd Street, SW., Suite 6050, Washington, DC 20416.

SUPPLEMENTARY INFORMATION: Notice is hereby given that as a result of the Administrator's disaster declaration, applications for disaster loans may be filed at the address listed above or other locally announced locations.

The following areas have been determined to be adversely affected by the disaster:

Primary Counties: Broward.

Contiguous Counties: Florida:

Collier, Hendry, Miami-Dade, Palm Beach.

The Interest Rates are:

	Percent
For Physical Damage:	
Homeowners With Credit Available Elsewhere	5.125
Homeowners Without Credit Available Elsewhere	2.562
Businesses With Credit Available Elsewhere	6.000
Businesses Without Credit Available Elsewhere	4.000
Non-Profit Organizations With Credit Available Elsewhere	3.625
Non-Profit Organizations Without Credit Available Elsewhere	3.000
For Economic Injury:	
Businesses & Small Agricultural Cooperatives Without Credit Available Elsewhere	4.000
Non-Profit Organizations Without Credit Available Elsewhere	3.000

The number assigned to this disaster for physical damage is 11996 6 and for economic injury is 11997 0.

The State which received an EIDL Declaration # is Florida.

(Catalog of Federal Domestic Assistance Numbers 59002 and 59008)

Dated: December 29, 2009.

Karen G. Mills,

Administrator.

[FR Doc. 2010–250 Filed 1–8–10; 8:45 am]

BILLING CODE 8025–01–P

SMALL BUSINESS ADMINISTRATION

[Disaster Declaration # 11986 and # 11987]

Alabama Disaster # AL–00025

AGENCY: U.S. Small Business Administration.

ACTION: Notice.

SUMMARY: This is a notice of an Administrative declaration of a disaster for the State of Alabama dated 12/29/2009.

Incident: Severe Storms and Flooding.

Incident Period: 12/12/2009 through 12/18/2009.

Effective Date: 12/29/2009.

Physical Loan Application Deadline Date: 03/01/2010.

Economic Injury (EIDL) Loan Application Deadline Date: 09/29/2010.

ADDRESSES: Submit completed loan applications to: U.S. Small Business Administration, Processing and Disbursement Center, 14925 Kingsport Road, Fort Worth, TX 76155.

FOR FURTHER INFORMATION CONTACT: A. Escobar, Office of Disaster Assistance, U.S. Small Business Administration, 409 3rd Street, SW., Suite 6050, Washington, DC 20416.

SUPPLEMENTARY INFORMATION: Notice is hereby given that as a result of the Administrator's disaster declaration, applications for disaster loans may be filed at the address listed above or other locally announced locations.

The following areas have been determined to be adversely affected by the disaster:

Primary Counties: Escambia.

Contiguous Counties:

Alabama: Baldwin; Conecuh; Covington; Monroe.

Florida: Escambia; Okaloosa; Santa Rosa.

The Interest Rates are:

	Percent
For Physical Damage:	
Homeowners With Credit Available Elsewhere:	5.125

	Percent
Homeowners Without Credit Available Elsewhere:	2.562
Businesses With Credit Available Elsewhere:	6.000
Businesses Without Credit Available Elsewhere:	4.000
Non-Profit Organizations With Credit Available Elsewhere:	3.625
Non-Profit Organizations Without Credit Available Elsewhere:	3.000
For Economic Injury:	
Businesses & Small Agricultural Cooperatives Without Credit Available Elsewhere:	4.000
Non-Profit Organizations Without Credit Available Elsewhere:	3.000

The number assigned to this disaster for physical damage is 11986 6 and for economic injury is 11987 0.

The States which received an EIDL Declaration # are Alabama, Florida.

(Catalog of Federal Domestic Assistance Numbers 59002 and 59008)

Dated: December 29, 2009.

Karen G. Mills,

Administrator.

[FR Doc. 2010–249 Filed 1–8–10; 8:45 am]

BILLING CODE 8025–01–P

SMALL BUSINESS ADMINISTRATION

[Disaster Declaration #12000 and #12001]

Texas Disaster # TX–00354

AGENCY: U.S. Small Business Administration.

ACTION: Notice.

SUMMARY: This is a notice of an Administrative declaration of a disaster for the State of Texas dated 01/04/2010.

Incident: Severe Storms and Tornado.

Incident Period: 12/23/2009.

Effective Date: 01/04/2010.

Physical Loan Application Deadline Date: 03/05/2010.

Economic Injury (EIDL) Loan Application Deadline Date: 10/04/2010.

ADDRESSES: Submit completed loan applications to: U.S. Small Business Administration, Processing And Disbursement Center, 14925 Kingsport Road, Fort Worth, TX 76155.

FOR FURTHER INFORMATION CONTACT: A Escobar, Office of Disaster Assistance, U.S. Small Business Administration, 409 3rd Street, SW., Suite 6050, Washington, DC 20416.

SUPPLEMENTARY INFORMATION: Notice is hereby given that as a result of the Administrator's disaster declaration, applications for disaster loans may be filed at the address listed above or other locally announced locations.

The following areas have been determined to be adversely affected by the disaster:

Primary Counties: Angelina.

Contiguous Counties:

Texas: Cherokee, Houston, Jasper, Nacogdoches, Polk, San Augustine, Trinity, Tyler.

The Interest Rates are:

	Percent
For Physical Damage:	
Homeowners With Credit Available Elsewhere	5.125
Homeowners Without Credit Available Elsewhere	2.562
Businesses With Credit Available Elsewhere	6.000
Businesses Without Credit Available Elsewhere	4.000
Non-Profit Organizations With Credit Available Elsewhere	3.625
Non-Profit Organizations Without Credit Available Elsewhere	3.000
For Economic Injury:	
Businesses & Small Agricultural Cooperatives Without Credit Available Elsewhere	4.000
Non-Profit Organizations Without Credit Available Elsewhere	3.000

The number assigned to this disaster for physical damage is 12000 B and for economic injury is 12001 0.

The States which received an EIDL Declaration # are Texas.

(Catalog of Federal Domestic Assistance Numbers 59002 and 59008)

Dated: January 4, 2009.

Karen G. Mills,

Administrator.

[FR Doc. 2010–251 Filed 1–8–10; 8:45 am]

BILLING CODE 8025–01–P

SECURITIES AND EXCHANGE COMMISSION

[Release No. IA–2971/803–200]

BlackRock, Inc.; Notice of Application

January 4, 2010.

AGENCY: Securities and Exchange Commission ("SEC" or "Commission").

ACTION: Notice of application for an exemptive order under Section 206A of the Investment Advisers Act of 1940 (the "Advisers Act").

APPLICANT: BlackRock, Inc. ("Applicant" or "BlackRock").

RELEVANT ADVISERS ACT SECTIONS: Exemption requested under section 206A of the Advisers Act from subsections (a)(2)(iii)(A)(*3*) and (a)(2)(iii)(B) of Advisers Act rule 206(4)–3.

SUMMARY OF APPLICATION: Applicant requests that the Commission issue an order under section 206A of the Advisers Act exempting it and its investment advisory subsidiaries from Advisers Act rule 206(4)–3(a)(2)(iii)(A)(*3*), which requires any cash solicitor for an investment adviser to provide a prospective client with a separate solicitor's disclosure document at the time of the solicitation, and from Advisers Act rule 206(4)–3(a)(2)(iii)(B), which requires an investment adviser to receive a prospective client's written acknowledgement of receipt of the separate solicitor's document prior to entering into any advisory contract with that client.

FILING DATES: The application was filed on April 27, 2009, and an amended and restated application was filed on October 30, 2009.

HEARING OR NOTIFICATION OF HEARING: An order granting the application will be issued unless the Commission orders a hearing. Interested persons may request a hearing by writing to the Commission's Secretary and serving Applicant with a copy of the request, personally or by mail. Hearing requests should be received by the SEC by 5:30 p.m. on February 10, 2010 and should be accompanied by proof of service on Applicant, in the form of an affidavit or, for lawyers, a certificate of service. Hearing requests should state the nature of the writer's interest, the reason for the request, and the issues contested. Persons may request notification of a hearing by writing to the Commission's Secretary.

ADDRESSES: Secretary, Securities and Exchange Commission, 100 F Street, NE., Washington, DC 20549–1090. Applicant, BlackRock, Inc., c/o Howard B. Surloff, 40 East 52nd Street, New York, New York 10022.

FOR FURTHER INFORMATION CONTACT: Sarah G. ten Siethoff, Senior Counsel, or Daniel S. Kahl, Branch Chief, at (202) 551–6787 (Office of Investment Adviser Regulation, Division of Investment Management).

SUPPLEMENTARY INFORMATION: The following is a summary of the application. The complete application may be obtained for a fee at the SEC's Public Reference Branch, 100 F Street, NE., Washington, DC 20549–0102 (telephone (202) 551–5850)).

Applicant's Representations

1. Applicant is a publicly traded holding company conducting investment management and ancillary businesses primarily through a variety of directly or indirectly wholly owned registered investment advisory

subsidiaries (the "BlackRock Advisory Subsidiaries"). A substantial portion of the BlackRock Advisory Subsidiaries' business involves advising high net worth clients through a "wrap fee" program ("Private Investors") and advising institutional clients generally through traditional separate account arrangements ("Institutional Separate Accounts" or "ISA"). Broker-dealer subsidiaries controlled by Merrill Lynch & Co., Inc. ("Merrill Lynch") solicit clients for the Private Investors and ISA businesses.

2. On September 29, 2006, BlackRock acquired substantially all of Merrill Lynch's global investment management business (the "MLIM Business") from Merrill Lynch in exchange for issuing a substantial equity interest in itself to Merrill Lynch (the "Transaction"). That equity interest, as of January 1, 2009, represented a 48.2% economic interest in BlackRock and a 44.2% voting interest in BlackRock. A substantial portion of BlackRock's current Private Investors and ISA businesses, including the investment advisory clients serviced by these businesses, were acquired in the Transaction and formerly were important parts of the MLIM Business.

3. On December 26, 2008, BlackRock and Merrill Lynch entered into an Exchange Agreement pursuant to which Merrill Lynch and BlackRock agreed to exchange (i) 49,865,000 shares of BlackRock common stock held by Merrill Lynch for a like number of shares of BlackRock's Series B non-voting convertible participating preferred stock, and (ii) 12,604,918 shares of BlackRock's Series A non-voting convertible participating preferred stock held by Merrill Lynch for a like number of shares of Series B Preferred Stock (the "Exchange"), in effect reducing Merrill Lynch's voting interest in BlackRock to 4.6%, while its economic interest remains largely unchanged at 46.3% on a fully diluted basis.

4. Prior to the Transaction, broker-dealer subsidiaries controlled by Merrill Lynch ("ML Broker-Dealers"), through their registered representatives, solicited clients for the investment adviser subsidiaries controlled by Merrill Lynch that conducted the Private Investors and ISA portions of the MLIM Business, in exchange for a cash fee and in reliance on subsection (a)(2)(ii) of rule 206(4)–3 under the Advisers Act (the "Control-Affiliate Solicitor Provision"). The Control-Affiliate Solicitor Provision allows "partner[s], officer[s], director[s] or employee[s] of a person which controls, is controlled by, or is under common control with [an] investment adviser" to solicit clients for the investment adviser in exchange for a cash fee so long as the solicitor discloses the identity of his employer and the nature of the affiliation between his employer and the recommended adviser at the time of the solicitation or referral. The Control-Affiliate Solicitor Provision does not require solicitors and advisers to follow any other particularized requirements in making these required disclosures. The ML Broker-Dealers never used the independent solicitor disclosure procedures contained in subsection (a)(2)(iii) of rule 206(4)–3 under the Advisers Act (the "Independent Solicitor Provision"), which contains several specific requirements that an independent solicitor must follow, when referring clients to the MLIM Business because Merrill Lynch controlled both the MLIM Business and the ML Broker-Dealers.

5. Notwithstanding Merrill Lynch's significant economic stake in BlackRock, due to the particular and unique facts and circumstances of the BlackRock-Merrill Lynch relationship, BlackRock has concluded that Merrill Lynch does not "control" it for purposes of the Advisers Act. In addition to the absence of voting power indicative of control, BlackRock and Merrill Lynch have entered into a stockholder agreement in connection with the Transaction (the "Stockholder Agreement") that contractually denies Merrill Lynch the right to decide how to vote its BlackRock shares on any matter other than a very limited number of extraordinary proposals (primarily related to issues impacting Merrill Lynch's ownership interest in BlackRock), prohibits Merrill Lynch from otherwise attempting to influence or control BlackRock, and imposes a number of other limitations governing the BlackRock voting securities Merrill Lynch beneficially owns. The Stockholder Agreement's limitations on Merrill Lynch's rights as a holder of BlackRock voting securities, and as an investor in BlackRock generally, deny Merrill Lynch the power and ability to control BlackRock ordinarily associated with the ownership of such a large economic stake in a company.[1]

6. BlackRock represents that the Stockholder Agreement, as well as several other agreements entered into in connection with the Transaction, serve to create a long-standing close affiliation between BlackRock and Merrill Lynch for the purpose of achieving their mutual business and economic objectives, even though they do not result in Merrill Lynch "controlling" BlackRock within the meaning of the Advisers Act. The Stockholder Agreement, as well as these other agreements, are publicly available in BlackRock's filings with the Commission.

7. The nature of the close, ongoing relationship between BlackRock and Merrill Lynch is publicly disclosed, discussed and summarized on BlackRock's internet website, BlackRock's Form ADV Part II, in BlackRock's client documentation, in BlackRock's periodic filings under the Securities Exchange Act of 1934, as amended (the "Exchange Act"), and in other generally available public information. BlackRock represents that this comprehensive disclosure serves to ensure that the exact nature and extent of the close affiliation between BlackRock and Merrill Lynch is readily apparent to the public and the market at large.

8. BlackRock represents that BlackRock and the BlackRock Advisory Subsidiaries will abide by the following solicitation procedures:

a. The referral agreement between BlackRock and Merrill Lynch (the "BLK–MER Referral Agreement") requires that ML Broker-Dealers disclose to potential clients the relationship between Merrill Lynch and BlackRock at the time of a referral to a BlackRock Advisory Subsidiary. ML Broker-Dealers will provide prominent written disclosure to potential clients regarding the relationship between Merrill Lynch and BlackRock at or prior to the time of a referral to a BlackRock Advisory Subsidiary. This prominent written disclosure will also address Merrill Lynch's resulting conflict of interest in recommending BlackRock.

b. When a ML Broker-Dealer solicits any prospective client for a BlackRock Advisory Subsidiary, the prospective client will receive the BlackRock Advisory Subsidiary's written disclosure statement required by Rule 204–3 promulgated under the Advisers Act (the "ADV Part II Disclosure Document"). The BlackRock Advisory Subsidiary's ADV Part II Disclosure Document will be delivered by the BlackRock Advisory Subsidiary (and not by the solicitor) not later than the time that a fully executed investment advisory contract is provided to the client, although not necessarily at the time of the solicitation itself. The BlackRock Advisory Subsidiary's ADV Part II Disclosure Document will contain detailed disclosures about the nature of the affiliation between Merrill Lynch and BlackRock and specifically

[1] BlackRock has not asked the Commission to confirm, and the Commission is not confirming, BlackRock's conclusion that Merrill Lynch does not control it within the meaning of the Advisers Act.

draw potential clients' attention to the inherent bias a ML Broker-Dealer has to recommend a BlackRock Advisory Subsidiary. BlackRock will ensure that these additional disclosures conform, in all material respects, to the disclosures required by the Independent Solicitor Provision.

c. If a BlackRock Advisory Subsidiary accepts a client referred by a ML Broker-Dealer, the prospective client will enter into a written investment management agreement with the BlackRock Advisory Subsidiary. Clients referred through the Private Investors channel will be provided with and will generally execute a form investment management agreement that will contain further disclosures about the nature of the relationship between Merrill Lynch and BlackRock in addition to those that will be provided in the BlackRock Advisory Subsidiary's ADV Part II Disclosure Document and at the time of the referral. Clients referred through the ISA channel will often be provided with a form investment management agreement with similar disclosures, but many prefer to use their own form investment management agreement and consequently these disclosures may not appear in the investment management agreement. BlackRock Advisory Subsidiaries will not separately charge any client any explicit amount, in addition to the advisory fee, for the cost of obtaining that client's account, and no differential with respect to the amount or level of advisory fees charged by a BlackRock Advisory Subsidiary will be attributable to the solicitation arrangements with ML Broker-Dealers described in the Application.

d. BlackRock Advisory Subsidiaries and ML Broker-Dealers will engage in this solicitation arrangement pursuant to the BLK–MER Referral Agreement. BlackRock represents that the BLK–MER Referral Agreement complies with subsections (A)(*1*) and (A)(*2*) of the Independent Solicitor Provision.

Applicant's Legal Analysis

1. Section 206A of the Advisers Act grants the Commission the authority to "conditionally or unconditionally exempt any person or transaction * * * from any provision or provisions of [the Advisers Act] or of any rule or regulation thereunder, if and to the extent that such exemption is necessary or appropriate in the public interest and consistent with the protection of investors and the purposes fairly intended by the policy and provisions of [the Advisers Act]."

2. Section 206 of the Advisers Act is a general anti-fraud provision applicable to investment advisers. Rule 206(4)–3 ("the Cash Solicitation Rule") was adopted under section 206(4) of the Advisers Act because the Commission determined that the nature of the conflict of interest mandated disclosure to clients of cash compensation arrangements between solicitors and recommended investment advisers, which alerts clients to the personal incentive the solicitor has to recommend one particular adviser over another.

3. The Control-Affiliate Solicitor Provision (subsection (a)(2)(ii) of the Cash Solicitation Rule) applies to anyone who is "(A) a partner, officer, director or employee of [the] investment adviser, or (B) a partner, officer, director or employee of a person which controls, is controlled by, or is under common control with [the] investment adviser." All investment advisers and solicitors must meet certain threshold requirements to rely on the Cash Solicitation Rule regardless of any affiliation between the investment adviser and the solicitor. However, where the Control-Affiliate Solicitor Provision applies, the Cash Solicitation Rule requires only that either (1) the solicitor's status as a partner, officer, director or employee of the adviser be disclosed to the prospective client; or (2) the solicitor's status as a partner, officer, director or employee of a company affiliated with the adviser, along with the nature of the affiliation between the solicitor's employer and the investment adviser, be disclosed to the prospective client at the time of the solicitation or referral.

4. The Independent Solicitor Provision (subsection (a)(2)(iii) of the Cash Solicitation Rule) contains several specific requirements: (A) The written solicitation agreement between the adviser and solicitor must contain specific terms; (B) the solicitor must deliver to the prospective client, at the time of solicitation, the adviser's ADV Part II Disclosure Document and a separate written disclosure document described in subsection (b) of the Cash Solicitation Rule (the "Independent Solicitor Disclosure Document" and the required delivery of both the adviser's ADV Part II Disclosure Document and the Independent Solicitor Disclosure Document being the "Part II and Independent Solicitor Disclosure Document Delivery Requirement"); (C) the adviser must receive a signed and dated acknowledgement of the client's receipt of the ADV Part II Disclosure Document and the Independent Solicitor Disclosure Document prior to, or at the time of, entering into any written or oral investment advisory contract (the "Signed Acknowledgement Requirement"); and (D) the adviser must make a bona fide effort to ascertain whether the solicitor has complied with the terms of the written solicitation agreement and must have a reasonable basis for believing that the solicitor has so complied.

5. The Independent Solicitor Disclosure Document must contain the following information: (i) The names of the solicitor and investment adviser; (ii) the nature of the relationship, including any affiliation, between the solicitor and the investment adviser; (iii) a statement that the solicitor will be compensated for his solicitation services by the investment adviser; (iv) the terms of such compensation arrangement, including a description of the compensation paid or to be paid to the solicitor; and (v) the amount, if any, for the cost of obtaining his account the client will be charged in addition to the advisory fee, and the differential, if any, among clients with respect to the amount or level of advisory fees charged by the investment adviser if such differential is attributable to the existence of any arrangement pursuant to which the investment adviser has agreed to compensate the solicitor for soliciting clients for, or referring clients to, the investment adviser.

6. BlackRock asserts that, as articulated in the adopting release for the Cash Solicitation Rule, the key policy rationale underlying the limited disclosure regime of the Control-Affiliate Solicitor Provision is that "[a]s long as a client is aware that the recommended adviser is the solicitor's employer or a close affiliate of the solicitor's employer, there appears to be little need to require the imposition of additional disclosure and recordkeeping requirements." BlackRock further asserts that the Control-Affiliate Solicitor Provision reflects the argument advanced by commenters considering the Cash Solicitation Rule that "there is little basis for assuming that potential clients will be any less aware of the inherent bias when an employee recommends an adviser who is a person associated with his employer than when he recommends the advisory services of his own employer." Thus, BlackRock submits, one rationale for expanding the scope of the Control-Affiliate Solicitor Provision to include persons part of an organization that is closely affiliated with the recommended adviser is that it should be readily apparent to the public that the close affiliation between the solicitor and adviser creates an inherent bias to recommend the affiliated adviser.

7. Pursuant to the Exchange, Merrill Lynch beneficially owns approximately

a 46.3% economic interest in BlackRock on a fully diluted basis; however, its ownership of BlackRock's outstanding voting securities is reduced to approximately 4.9%. Although BlackRock asserts that this relationship is not a "control" relationship as defined under the Advisers Act, the disclosure of Merrill Lynch's ownership of such a large block of BlackRock's capital stock, combined with the economic stake represented thereby, is sufficient to provide the same alert to the investing public and potential clients as to a ML Broker-Dealer's "inherent bias" in recommending a BlackRock Advisory Subsidiary and is, in effect, a "close affiliation" for the purposes of satisfying the concerns underlying the Cash Solicitation Rule and the rationale for the less onerous disclosure elements of the Control-Affiliate Solicitor Provision.

8. The unique affiliation relationship between BlackRock and Merrill Lynch is consistently discussed, summarized and disclosed on BlackRock's Internet Web site, BlackRock's Form ADV Part II, in BlackRock's client documentation, in BlackRock's filings under the Exchange Act, in registration statements for BlackRock's funds registered under the Investment Company Act of 1940 and in other generally available public information. BlackRock submits that these multiple avenues of disclosure serve to ensure that the exact nature and extent of the close affiliation between BlackRock and Merrill Lynch is readily apparent to the public and market at large. In addition, ML Broker-Dealers would provide prominent written disclosure to potential clients regarding the relationship between Merrill Lynch and BlackRock at or prior to the time of a referral to a BlackRock Advisory Subsidiary. This prominent written disclosure would also address Merrill Lynch's resulting conflict of interest in recommending BlackRock.

9. BlackRock seeks only exemptions from subsections (a)(2)(iii)(A)(*3*) and (a)(2)(iii)(B) of the Cash Solicitation Rule—the Part II and Independent Solicitor Disclosure Document Delivery Requirement and the Signed Acknowledgement Requirement. BlackRock submits that the BLK–MER Referral Agreement contains terms that satisfy subsections (a)(2)(iii)(A)(*1*)–(*2*) of the Cash Solicitation Rule. BlackRock proposes to adhere to subsection (a)(2)(iii)(C) of the Cash Solicitation Rule, which requires that the recommended investment adviser make a bona fide effort to ascertain whether the solicitor has complied with the referral agreement, and have a reasonable basis for so believing. BlackRock has represented that BlackRock Advisory Subsidiaries' ADV Part II Disclosure Documents would contain, in all material respects, the disclosures required by the Independent Solicitor Disclosure Document. Subsection (b)(5) of the Cash Solicitation Rule requires that the Independent Solicitor Disclosure Document disclose the terms of the compensation arrangement between the solicitor and the recommended adviser. BlackRock Advisory Subsidiaries' ADV Part II Disclosure Documents would disclose in general terms the fact that ML Broker-Dealers are compensated by the BlackRock Advisory Subsidiaries for their solicitation activities, but the details regarding the amount of compensation and the methods by which such amounts are determined would not be disclosed. BlackRock argues that this information would not be informative in this context because particularized disclosure as to the solicitation fee paid to ML Broker-Dealers would not help draw a potential client's focus to the significant economic benefit that ML Broker-Dealers derive due to Merrill Lynch's approximately 46.3% economic interest in BlackRock.

10. BlackRock submits that the purpose of the detailed requirements of the Independent Solicitor Provision is to ensure that the fact of a solicitor's bias in favor of a recommended adviser is presented in a clear and unmistakable manner that ensures that potential clients become aware of this bias. BlackRock argues that the inherent bias on a ML Broker-Dealer's part to recommend a BlackRock Advisory Subsidiary is clearly disclosed and unmistakable as a result of the close affiliation between Merrill Lynch (the solicitor's parent entity) and BlackRock (the recommended adviser's parent entity) such that, within the policy framework of the Cash Solicitation Rule, these additional disclosures need not be expressly made in a separate Independent Solicitor Disclosure Document.

11. BlackRock asserts that the Commission granting the order requested by its application would be appropriate in the public interest because (i) it would preserve for current and future Merrill Lynch brokerage clients the significant investment experience and resources of BlackRock currently available to such clients, while at the same time ensuring that such clients will continue to receive the protections intended by the Cash Solicitation Rule, (ii) requiring strict compliance with the Independent Solicitor Provision would create risks that client investment options might be reduced as a result of ML Broker-Dealers being discouraged from recommending BlackRock Advisory Subsidiaries, (iii) clients might find a change in procedure and documentation confusing and burdensome, and (iv) additional costs associated with such strict compliance might ultimately result in greater expenses for clients.

Applicant's Conditions

1. The Applicant will rely on the Order only for so long as the Cash Solicitation Rule in effect as of the date of the Order is operative. If the Commission, subsequent to the date of the Order, adopts a new rule governing the payment of cash fees by registered investment advisers to persons soliciting clients on their behalf (a "New Cash Solicitation Rule"), the Applicant agrees to rely on the Order only until the compliance date for such New Cash Solicitation Rule.

2. The Applicant will rely on the Order only for so long as Merrill Lynch beneficially owns 25% or more of the Applicant's outstanding capital stock. If Merrill Lynch ever ceases to beneficially own at least 25% of the Applicant's outstanding capital stock, the Applicant represents that it will not rely on the relief granted by the Order.

3. The Applicant will require that the BlackRock Advisory Subsidiaries and the ML Broker-Dealers provide clear disclosure of the Applicant's relationship with Merrill Lynch to potential clients referred to BlackRock Advisory Subsidiaries by ML Broker-Dealers in exchange for a cash fee. This disclosure will be provided by ML Broker-Dealers' disclosure to potential clients of the relationship between Merrill Lynch and BlackRock at the time of a referral to a BlackRock Advisory Subsidiary pursuant to the BLK–MER Referral Agreement, and via delivery of (i) a BlackRock Advisory Subsidiary's ADV Part II Disclosure Document; and (ii) a form investment management agreement provided to each client referred to a BlackRock Advisory Subsidiary through the Private Investors channel and often provided to clients referred through the ISA channel. The Applicant will require that all such disclosures be substantially similar to the disclosures described in the Application and be provided pursuant to procedures substantially similar to those described in the Application. Additionally, the ML Broker-Dealers will provide prominent written disclosure to potential clients regarding the relationship between Merrill Lynch and BlackRock at or prior to the time of a referral to a BlackRock Advisory Subsidiary. This prominent written

disclosure will also address Merrill Lynch's resulting conflict of interest in recommending BlackRock.

4. The Applicant will require the BlackRock Advisory Subsidiaries to comply with subsection (a)(2)(iii)(C) of the Cash Solicitation Rule. Further, the Applicant represents that it will require the BlackRock Advisory Subsidiaries to continue to comply with subsection (A)(*2*) of the Independent Solicitor Provision. To comply with subsection (a)(2)(iii)(C) of the Cash Solicitation Rule, the Applicant agrees to require the BlackRock Advisory Subsidiaries to make a bona fide effort to ascertain whether ML Broker-Dealers have complied with the terms of the BLK–MER Referral Agreement, any amendment thereof, or any subsequently executed referral agreement with ML Broker-Dealers, and have a reasonable basis for believing that ML Broker-Dealers have so complied.

For the Commission, by the Division of Investment Management, under delegated authority.

Florence E. Harmon,

Deputy Secretary.

[FR Doc. 2010–196 Filed 1–8–10; 8:45 am]

BILLING CODE 8011–11–P

SECURITIES AND EXCHANGE COMMISSION

Sunshine Act Meeting Notice

Notice is hereby given, pursuant to the provisions of the Government in the Sunshine Act, Public Law 94–409, that the Securities and Exchange Commission will hold a Closed Meeting on Thursday, January 14, 2010 at 2 p.m.

Commissioners, Counsel to the Commissioners, the Secretary to the Commission, and recording secretaries will attend the Closed Meeting. Certain staff members who have an interest in the matters also may be present.

The General Counsel of the Commission, or his designee, has certified that, in his opinion, one or more of the exemptions set forth in 5 U.S.C. 552b(c)(3), (5), (7), 9(B) and (10) and 17 CFR 200.402(a)(3), (5), (7), 9(ii) and (10), permit consideration of the scheduled matters at the Closed Meeting.

Commissioner Paredes, as duty officer, voted to consider the items listed for the Closed Meeting in a closed session.

The subject matter of the Closed Meeting scheduled for Thursday, January 14, 2010 will be:

[I]nstitution and settlement of injunctive actions; institution and settlement of administrative proceedings; consideration of amicus participation; and

Other matters relating to enforcement proceedings.

At times, changes in Commission priorities require alterations in the scheduling of meeting items.

For further information and to ascertain what, if any, matters have been added, deleted or postponed, please contact:

The Office of the Secretary at (202) 551–5400.

Dated: January 7, 2010.

Elizabeth M. Murphy,

Secretary.

[FR Doc. 2010–391 Filed 1–7–10; 4:15 pm]

BILLING CODE 8011–01–P

SECURITIES AND EXCHANGE COMMISSION

[Release No. 34–61263; File No. SR–DTC–2009–19]

Self-Regulatory Organizations; the Depository Trust Company; Notice of Filing and Immediate Effectiveness of Proposed Rule Change To Revise Fee Schedule

December 30, 2009.

Pursuant to Section 19(b)(1) of the Securities Exchange Act of 1934 ("Act"),[1] notice is hereby given that on December 24, 2009, the Depository Trust Company ("DTC") filed with the Securities and Exchange Commission ("Commission") the proposed rule change as described in Items I, II, and III below, which Items have been prepared primarily by DTC. DTC filed the proposal pursuant to Section 19(b)(3)(A)(iii) of the Act[2] and Rule 19b–4(f)(4)[3] thereunder so that the proposal was effective upon filing with the Commission. The Commission is publishing this notice to solicit comments on the proposed rule change from interested persons.

I. Self-Regulatory Organization's Statement of the Terms of Substance of the Proposed Rule Change

The purpose of the proposed rule change is to revise fees for certain DTC services.

II. Self-Regulatory Organization's Statement of the Purpose of, and Statutory Basis for, the Proposed Rule Change

In its filing with the Commission, DTC included statements concerning the purpose of and basis for the proposed rule change and discussed any comments it received on the proposed rule change. The text of these statements may be examined at the places specified in Item IV below. DTC has prepared summaries, set forth in sections (A), (B) and (C) below, of the most significant aspects of such statements.[4]

(A) Self-Regulatory Organization's Statement of the Purpose of, and Statutory Basis for, the Proposed Rule Change

DTC proposes increasing certain existing service fees and introducing fees associated with new service capabilities. Increased fees are proposed for existing services related to Deposits, Custody and Asset Servicing, Underwriting and Dividends, Book-Entry Delivery, and Money Market Instruments. These changes are intended to realign the fees with DTC's corresponding service costs, scale the fees to reflect processing complexity, and create fee simplification and transparency.

In addition, DTC will increase and implement certain disincentive fees to discourage activities that increase industry inefficiencies. This includes fee increases for reject processing services and for exception processing related to Deposit and Withdrawal activities and Custody. It also includes a new password reset fee.[5]

New fees are proposed for recently-developed services related to Underwriting, Deposits, and Reorganization. The new fees include an Underwriting fee for Incomplete Eligibility Information and Older Issue Eligibility, a Reorganization fee structure for Survivor Options, and a new Long Position fee for issues with a large number of shares but low market value.

These proposed fee revisions are consistent with DTC's overall pricing philosophy of aligning service fees with underlying costs, discouraging manual and exception processing, and encouraging immobilization and dematerialization of securities. The effective date for these fee adjustments is January 4, 2010. The changes to DTC's Fee Schedule can be found in Exhibit 5 to proposed rule change SR–DTC–2009–19 at *http://www.dtcc.com/downloads/legal/rule_filings/2009/dtc/2009–19.pdf.*

DTC believes that the proposed rule change is consistent with the requirements of Section 17A of the Act[6]

[1] 15 U.S.C. 78s(b)(1).

[2] 15 U.S.C. 78s(b)(3)(A)(iii).

[3] 17 CFR 240.19b–4(f)(4).

[4] The Commission has modified the text of the summaries prepared by DTC.

[5] The password reset fee would apply after an initial allowance of two password resets at no cost.

[6] 15 U.S.C. 78q–1.

and the rules and regulations thereunder applicable to DTC because the proposed rule change updates DTC's fee schedule and provides equitable allocation of fees among its members.

(B) Self-Regulatory Organization's Statement on Burden on Competition

DTC does not believe that the proposed rule change will have any impact or impose any burden on competition.

(C) Self-Regulatory Organization's Statement on Comments on the Proposed Rule Change Received From Members, Participants, or Others

Written comments relating to the proposed rule change have not yet been solicited or received. DTC will notify the Commission of any written comments received by DTC.

III. Date of Effectiveness of the Proposed Rule Change and Timing for Commission Action

The foregoing rule change has become effective pursuant to Section 19(b)(3)(A)(ii) of the Act [7] and Rule 19b–4(f)(2) [8] thereunder because the proposed rule change is establishing or changing a due, fee, or other charge applicable only to a member. At any time within sixty days of the filing of such rule change, the Commission may summarily abrogate such rule change if it appears to the Commission that such action is necessary or appropriate in the public interest, for the protection of investors, or otherwise in furtherance of the purposes of the Act.

IV. Solicitation of Comments

Interested persons are invited to submit written data, views and arguments concerning the foregoing, including whether the proposed rule change is consistent with the Act. Comments may be submitted by any of the following methods:

Electronic Comments

- Electronic comments may be submitted by using the Commission's Internet comment form *(http://www.sec.gov/rules/sro.shtml),* or
- Send an e-mail to *rule-comment@sec.gov.* Please include File No. SR–DTC–2009–19 on the subject line.

Paper Comments

- Send paper comments in triplicate to Elizabeth M. Murphy, Secretary, Securities and Exchange Commission, 100 F Street, NE., Washington DC 20549–1090.

All submissions should refer to File Number SR–DTC–2009–19. This file number should be included on the subject line if e-mail is used. To help the Commission process and review your comments more efficiently, please use only one method. The Commission will post all comments on the Commission's Internet Web site *(http://www.sec.gov/rules/sro.shtml).* Copies of the submission, all subsequent amendments, all written statements with respect to the proposed rule change that are filed with the Commission, and all written communications relating to the proposed rule change between the Commission and any person, other than those that may be withheld from the public in accordance with the provisions of 5 U.S.C 552, will be available for inspection and copying in the Commission's Public Reference Section, 100 F Street, NE., Washington DC 20549, on official business days between the hours of 10 am and 3 pm. Copies of such filings also will be available for inspection and copying at the principal office of DTC and on DTC's Web site at *http://www.dtcc.com/downloads/legal/rule_filings/2009/dtc/2009-19.pdf.* All comments received will be posted without change; the Commission does not edit personal identifying information from submissions. You should submit only information that you wish to make available publicly. All submissions should refer to file number SR–DTC–2009–19 and should be submitted on or before February 1, 2010.

For the Commission, by the Division of Trading and Markets, pursuant to delegated authority.[9]

Florence E. Harmon,

Deputy Secretary.

[FR Doc. 2010–188 Filed 1–8–10; 8:45 am]

BILLING CODE 8011–01–P

[7] 15 U.S.C. 78s(b)(3)(A)(ii).

[8] 17 CFR 240.19b–4(f)(2).

[9] 17 CFR 200.30–3(a)(12).

SECURITIES AND EXCHANGE COMMISSION

[Release No. 34–61280; File No. SR–NFA–2009–01]

National Futures Association; Notice of Filing and Immediate Effectiveness of Proposed Rule Change Relating to Amendments to Compliance Rule 2–29(h) and the Adoption of an Interpretive Notice Regarding the Use of On-Line Social Networking Groups To Communicate With the Public

January 4, 2010.

Pursuant to Section 19b(7) of the Securities Exchange Act of 1934 ("Act"),[1] and Rule 19b–7 under the Act,[2] notice is hereby given that on December 4, 2009, National Futures Association ("NFA") filed with the Securities and Exchange Commission ("SEC" or "Commission") the proposed rule change described in Items I, II, and III below, which Items have been substantially prepared by the self-regulatory organization.[3] The Commission is publishing this notice to solicit comments on the proposed rule change from interested persons. NFA also has filed this proposed rule change concurrently with the Commodity Futures Trading Commission ("CFTC").

On December 4, 2009, the NFA requested that the CFTC make a determination that review of the proposed rule change of NFA is not necessary. On December 24, 2009, the CFTC notified the NFA that the CFTC has determined not to review the proposed rule change.[4]

I. Self-Regulatory Organization's Description and Text of the Proposed Rule Change

The amendments to Compliance Rule 2–29(h) require that certain audio and video advertisements that appear on the Internet—like similar radio and television advertisements—be submitted to NFA in advance for review and approval. The proposed Interpretive Notice reminds Members that on-line communications are subject to the same standards as other types of communications.

The text of the proposed rule change and Interpretive Notice is available on the NFA's Web site *(www.nfa.futures.org),* at the NFA's

[1] 15 U.S.C. 78s(b)(7).

[2] 17 CFR 240.19b–7.

[3] NFA filed a letter from the CFTC notifying the NFA that it had determined not to review the proposed rule change. *See* note 4.

[4] *See* letter from William Penner, Deputy Director, CFTC, to Thomas W. Sexton III, Esq., General Counsel, NFA, dated December 24, 2009.

principal office, and at the Commission's Public Reference Room.

II. Self-Regulatory Organization's Statement of the Purpose of, and Statutory Basis for the Proposed Rule Change

In its filing with the Commission, the self-regulatory organization included statements concerning the purpose of and basis for the proposed rule change and discussed any comments it received on the proposed rule change. The text of these statements may be examined at the places specified in Item IV below. The self-regulatory organization has prepared summaries, set forth in sections A, B, and C below, of the most significant aspects of such statements.

A. Self-Regulatory Organization's Statement of the Purpose of, and Statutory Basis for the Proposed Rule Change

1. Purpose

Section 15A(k) of the Act [5] makes NFA a national securities association for the limited purpose of regulating the activities of NFA Members ("Members") who are registered as brokers or dealers under Section 15(b)(11) of the Act.[6] NFA Compliance Rule 2–29(h) applies to all Members including those registered under Section 15(b)(11).

In December 2008, NFA's FCM, IB, and CPO/CTA Advisory Committees considered the growing use of social networking groups such as blogs, chat rooms, and forums to communicate with and solicit customers. As a result of those discussions, all three committees felt it would be helpful to issue written guidance reminding Members of their responsibilities in connection with these on-line communications.

As part of the process, NFA staff reviewed guidance from the Financial Industry Regulatory Authority ("FINRA") on the same issue. FINRA guidance states that blogs and bulletin boards are considered advertisements and are subject to the same requirements as other advertisements, while participating in a chat room is a public appearance subject to FINRA rules. The guidance also states that "[m]ember firms must supervise the operation of any securities-related blog, bulletin board or chat room hosted by [a registered representative] or by the firm itself to ensure compliance with FINRA Conduct Rules and the Federal securities laws." [7] The FINRA guidance also reminds FINRA members that their supervisory procedures can prohibit employees from using electronic media to discuss securities investments if the firm decides the medium is too hard to supervise.

FINRA has also produced several podcasts discussing on-line communications. In one podcast, FINRA staff suggest limiting posting access to a firm's blog or bulletin board to the firm's registered representatives. If the firm opens it up to a wider audience, however, FINRA staff advise requiring users to register and agree to the firm's terms of use.[8] In another podcast, FINRA staff states that publicly available social networking sites are advertisements and those with restricted access are sales literature, subject to the same content, pre-approval, filing, and recordkeeping requirements applicable to other types of advertisements and sales literature.[9]

The proposed Interpretive Notice provides guidance that is similar to the FINRA guidance. It reminds Members that on-line communications are subject to the same standards as other types of communications.

NFA has also noticed that profit claims that used to appear on radio and television are moving to the Internet and showing up on sites such as YouTube. Therefore, the proposed amendments to Compliance Rule 2–29(h) require that these videos—like similar radio and television advertisements—be submitted to NFA in advance for review and approval. Amendments to Compliance Rule 2–29 were previously filed in SR–NFA–2001–01.

2. Statutory Basis

The rule change is authorized by, and consistent with, Section 15A(k)(2)(B) of the Act.[10] That section requires NFA to have rules that are designed to prevent fraudulent and manipulative acts and practices, to promote just and equitable principles of trade, and, in general, to protect investors and the public interest, including rules governing sales practices and advertising of security futures products. The NFA believes the proposed rule change accomplishes this by requiring that videos showing profit claims that appear on the Internet—like similar radio and television advertisements—be submitted to NFA in advance for review and approval. Additionally, the NFA believes the proposed Interpretive Notice makes clear that communications through on-line social networking groups are subject to the same standards as other types of communications.

This proposal is not designed to regulate, by virtue of any authority conferred by the Act, matters not related to the purposes of the Act or the administration of the association. To the extent that this proposal regulates activities and transactions other than security futures, the authority for regulating those activities and transactions comes from the Commodity Exchange Act rather than the federal securities laws.

B. Self-Regulatory Organization's Statement on Burden on Competition

The proposed rule change will have little or no impact on competition. The proposed Interpretive Notice does not impose new requirements on Members, but rather makes clear that existing requirements regarding communications with the public are the same regardless of the medium used for such communications. Similarly, the proposed amendments to Compliance Rule 2–29(h) require that audio or video advertisements that would have to be submitted to NFA for prior approval if used on the radio or television must also be submitted to NFA if they are distributed through publicly accessible media, *e.g.,* the Internet. Although there may be some burden on members who have avoided this requirement by only using the Internet to distribute such advertisements, it is necessary and appropriate to ensure that communications by NFA Members are not misleading or otherwise inappropriate.

C. Self-Regulatory Organization's Statement on Comments on the Proposed Rule Change Received From Members, Participants, or Others

NFA worked with Member Committees in developing the rule change. NFA did not, however, publish the rule change to the membership for comment. NFA did not receive comment letters concerning the rule change.

III. Date of Effectiveness of the Proposed Rule Change and Timing for Commission Action

On December 24, 2009, the CFTC notified the NFA that it had determined not to review the proposed rule change and, therefore, NFA, is permitted to make the amendments effective as of

[5] 15 U.S.C. 78o–3(k).

[6] 15 U.S.C. 78o(b)(11).

[7] FINRA, "Guide to the Internet for Registered Representatives," *http://www.finra.org/Industry/Issues/Advertising/p006118,* accessed July 20, 2009.

[8] FINRA February 23, 2009 podcast on "Electronic Communications: Blogs, Bulletin Boards and Chat Rooms," *http://www.finra.org/Industry/Education/OnlineLearning/Podcasts/index.htm*, accessed July 20, 2009.

[9] FINRA March 10, 2009 podcast on "Electronic Communications: Social Networking Sites," *http://www.finra.org/Industry/Education/OnlineLearning/Podcasts/index.htm*, accessed July 20, 2009.

[10] 15 U.S.C. 78o–3(k)(2)(B).

this date.[11] At any time within 60 days of the date of effectiveness of the proposed rule change, the Commission, after consultation with the CFTC, may summarily abrogate the proposed rule change and require that the proposed rule change be refiled in accordance with the provisions of Section 19(b)(1) of the Act.

IV. Solicitation of Comments

Interested persons are invited to submit written data, views, and arguments concerning the foregoing, including whether the proposed rule change is consistent with the Act. Comments may be submitted by any of the following methods:

Electronic Comments

- Use the Commission's Internet comment form *(http://www.sec.gov/rules/sro.shtml);* or
- Send an e-mail to *rule-comments@sec.gov.* Please include File Number SR–NFA–2009–01.

Paper Comments

- Send paper comments in triplicate to Elizabeth M. Murphy, Secretary, Securities and Exchange Commission, 100 F Street, NE., Washington, DC 20549–1090.

All submissions should refer to File Number SR–NFA–2009–01. This file number should be included on the subject line if e-mail is used. To help the Commission process and review your comments more efficiently, please use only one method. The Commission will post all comments on the Commission's Internet Web site *(http://www.sec.gov/rules/sro.shtml).* Copies of the submission, all subsequent amendments, all written statements with respect to the proposed rule change that are filed with the Commission, and all written communications relating to the proposed rule change between the Commission and any person, other than those that may be withheld from the public in accordance with the provisions of 5 U.S.C. 552, will be available for inspection and copying in the Commission's Public Reference Room, 100 F Street, NE., Washington, DC 20549, on official business days between the hours of 10 a.m. and 3 p.m. Copies of such filing also will be available for inspection and copying at the principal office of NFA. All comments received will be posted without change; the Commission does not edit personal identifying information from submissions. You should submit only information that you wish to make publicly available.

All submissions should refer to File Number SR–NFA–2009–01 and should be submitted on or before February 1, 2010.

For the Commission, by the Division of Trading and Markets, pursuant to delegated authority.[12]

Florence E. Harmon,

Deputy Secretary.

[FR Doc. 2010–222 Filed 1–8–10; 8:45 am]

BILLING CODE 8011–01–P

[11] *See* note 4.

[12] 17 CFR 200.30–3(a)(73).

SECURITIES AND EXCHANGE COMMISSION

[Release No. 34–61287; File No. SR–ISE–2009–113]

Self-Regulatory Organizations; International Securities Exchange, LLC; Notice of Filing and Immediate Effectiveness of Proposed Rule Change To Make the Exchange's Pilot Program To Expose All-Or-None Orders Permanent

January 5, 2010.

Pursuant to Section 19(b)(1) of the Securities Exchange Act of 1934 (the "Act"),[1] and Rule 19b–4 thereunder,[2] notice is hereby given that on December 24, 2009, the International Securities Exchange, LLC (the "Exchange" or the "ISE") filed with the Securities and Exchange Commission ("Commission") the proposed rule change as described in Items I, II, and III below, which items have been prepared by the Exchange. The Exchange has filed the proposal as a "non-controversial" proposed rule change pursuant to Section 19(b)(3)(A)(iii) of the Act[3] and Rule 19b–4(f)(6) thereunder.[4] The Commission is publishing this notice to solicit comments on the proposed rule change from interested persons.

I. Self-Regulatory Organization's Statement of the Terms of Substance of the Proposed Rule Change

The Exchange is proposing to make permanent its pilot program regarding limitations on orders to include the exposure of all-or-none orders. The text of the proposed rule change is as follows, with deletions in [brackets] and additions *italicized:*

Rule 717. Limitations on Orders

* * * * *

Supplementary Material to Rule 717

.01–.03 No Change.

.04 A non-marketable all-or-none limit order shall be deemed "exposed" for the purposes of paragraphs (d) and (e) one second following a broadcast notifying market participants that such an order to buy or sell a specified number of contracts at a specified price has been received in the options series. [This provision shall be in effect on a pilot basis expiring January 31, 2010.]

* * * * *

II. Self-Regulatory Organization's Statement of the Purpose of, and Statutory Basis for, the Proposed Rule Change

In its filing with the Commission, the Exchange included statements concerning the purpose of, and basis for, the proposed rule change and discussed any comments it received on the proposed rule change. The text of these statements may be examined at the places specified in Item IV below. The self-regulatory organization has prepared summaries, set forth in Sections A, B and C below, of the most significant aspects of such statements.

A. Self-Regulatory Organization's Statement of the Purpose of, and Statutory Basis for, the Proposed Rule Change

(a) *Purpose*—The purpose of the proposed rule change is to make permanent the Exchange's pilot program regarding limitations on orders to include the exposure of all-or-none orders.

Pursuant to ISE Rule 717(d) and (e), Electronic Access Members must expose agency orders on the Exchange for at least one second before entering a contra-side proprietary order or a contra-side order that was solicited from a broker-dealer, or utilize one of the Exchange's execution mechanisms that have one second exposure periods built into the functionality.[5]

The Exchange operates an integrated system that consolidates all market maker quotes and orders, and automatically disseminates the best bid and offer. If a limit order is designated as all-or-none ("AON"), the contingency that the order must be executed in full makes it ineligible for display in the best bid or offer. Nevertheless, such orders are maintained in the system and remain available for execution after all other trading interest at the same price has been exhausted.[6] Upon the receipt

[1] 15 U.S.C. 78s(b)(1).

[2] 17 CFR 240.19b–4.

[3] 15 U.S.C. 78s(b)(3)(A).

[4] 17 CFR 240.19b–4(f)(6).

[5] *See* ISE Rule 716(d) (Facilitation Mechanism), Rule 716(e) (Solicited Order Mechanism) and Rule 723 (Price Improvement Mechanism for Crossing Transactions).

[6] Supplementary Material .02 to ISE Rule 713.

of a non-marketable all-or-none limit order, the system automatically will send a broadcast message to all market participants notifying them that an all-or-none order to buy or to sell a specified number of contracts at a specified price has been placed on the book. The broadcast message, which includes all of the terms of the order, will be made available to any market participant, not just members.[7]

On July 9, 2009, the Exchange adopted a proposed rule change on a three-month pilot basis to specify that a non-marketable all-or-none limit order is deemed "exposed" for the purposes of Rule 717(d) and (e) one second following a broadcast notifying members that such an order to buy or sell a specified number of contracts at a specified price has been received in the options series.[8] The Exchange subsequently extended the pilot for an additional month,[9] and again through December 31, 2009.[10] During the extension through December 31, 2009, the broadcast message was made available to any market participant, not just members. Thus, all of the terms of the order continue to be disclosed to all market participants. The pilot was subsequently extended for an additional month and is set to expire on January 31, 2010. The Exchange now proposes to make the pilot permanent, as of February 1, 2010.

(b) *Basis*—The basis under the Securities Exchange Act of 1934 ("Exchange Act") for this proposed rule change is the requirement under Section 6(b)(5) that an exchange have rules that are designed to promote just and equitable principles of trade, and to remove impediments to and perfect the mechanism for a free and open market and a national market system, and in general, to protect investors and the public interest. In particular, under the proposed rule change all-or-none orders will continue to be exposed to all market participants so that there is a greater opportunity for them to interact with such orders.

B. Self-Regulatory Organization's Statement on Burden on Competition

The proposed rule change does not impose any burden on competition that is not necessary or appropriate in furtherance of the purposes of the Act.

C. Self-Regulatory Organization's Statement on Comments on the Proposed Rule Change Received From Members, Participants or Others

The Exchange has not solicited, and does not intend to solicit, comments on this proposed rule change. The Exchange has not received any unsolicited written comments from members or other interested parties.

III. Date of Effectiveness of the Proposed Rule Change and Timing for Commission Action

This proposed rule change does not significantly affect the protection of investors or the public interest, does not impose any significant burden on competition, and, by its terms, does not become operative for 30 days after the date of the filing, or such shorter time as the Commission may designate if consistent with the protection of investors and the public interest.[11] The Exchange provided the Commission with written notice of its intent to file the proposed rule change, along with a brief description and text of the proposed rule change, at least five business days prior to the date of filing the proposed rule change as required by Rule 19b–4(f)(6).[12] The proposed rule change will permit the exchange to make the current pilot program permanent. For the foregoing reason, this rule filing qualifies for immediate effectiveness as a "non-controversial" rule change under paragraph (f)(6) of Rule 19b–4 of the Act, as it does not raise any new, unique or substantive issues, and is beneficial for competitive purposes and to promote a free and open market for the benefit of investors.

At any time within 60 days of the filing of the proposed rule change, the Commission may summarily abrogate such rule change if it appears to the Commission that such action is necessary or appropriate in the public interest, for the protection of investors, or otherwise in furtherance of the purposes of the Act.

IV. Solicitation of Comments

Interested persons are invited to submit written data, views, and arguments concerning the foregoing, including whether the proposed rule change is consistent with the Act. Comments may be submitted by any of the following methods:

Electronic Comments

- Use the Commission's Internet comment form (*http://www.sec.gov/rules/sro.shtml*); or
- Send an e-mail to *rule-comments@sec.gov.* Please include File No. SR–ISE–2009–113 on the subject line.

Paper Comments

- Send paper comments in triplicate to Elizabeth M. Murphy, Secretary, Securities and Exchange Commission, 100 F Street, NE., Washington, DC 20549–1090.

All submissions should refer to File No. SR–ISE–2009–113. This file number should be included on the subject line if e-mail is used. To help the Commission process and review your comments more efficiently, please use only one method. The Commission will post all comments on the Commission's Internet Web site (*http://www.sec.gov/rules/sro.shtml*). Copies of the submission, all subsequent amendments, all written statements with respect to the proposed rule change that are filed with the Commission, and all written communications relating to the proposed rule change between the Commission and any person, other than those that may be withheld from the public in accordance with the provisions of 5 U.S.C. 552, will be available for inspection and copying in the Commission's Public Reference Room, 100 F Street, NE., Washington, DC 20549, on official business days between the hours of 10 a.m. and 3 p.m. Copies of such filing also will be available for inspection and copying at the principal office of ISE. All comments received will be posted without change; the Commission does not edit personal identifying information from submissions. You should submit only information that you wish to make available publicly. All submissions should refer to File No. SR–ISE–2009–113 and should be submitted on or before February 1, 2010.

For the Commission, by the Division of Trading and Markets, pursuant to delegated authority.[13]

Florence E. Harmon,

Deputy Secretary.

[FR Doc. 2010–240 Filed 1–8–10; 8:45 am]

BILLING CODE 8011–01–P

[7] The AON broadcast message is available through the Exchange's application programming interface ("API"). Any member or non-member connecting to the API can receive the AON broadcast message. The Exchange is not proposing to adopt a fee associated with receiving this message, and any future fee would be filed with the Commission.

[8] *See* Exchange Act Release No. 60311 (July 15, 2009), 74 FR 36290 (July 22, 2009).

[9] *See* Exchange Act Release No. 60866 (October 22, 2009), 74 FR 55879 (October 29, 2009).

[10] *See* Exchange Act Release No. 61016 (November 17, 2009), 74 FR 61393 (November 24, 2009).

[11] The Commission notes that the pilot will become permanent as of February 1, 2010 (*see supra* Section II(A)(a)).

[12] 17 CFR 240.19b–4(f)(6).

[13] 17 CFR 200.30–3(a)(12).

SECURITIES AND EXCHANGE COMMISSION

[Release No. 34–61286; File No. SR–ISE–2009–112]

Self-Regulatory Organizations; International Securities Exchange, LLC; Notice of Filing and Immediate Effectiveness of Proposed Rule Change To Extend the Pilot Program To Expose All-or-None Orders Until January 31, 2010

January 5, 2010.

Pursuant to Section 19(b)(1) of the Securities Exchange Act of 1934 (the "Act"),[1] and Rule 19b–4 thereunder,[2] notice is hereby given that on December 24, 2009, the International Securities Exchange, LLC (the "Exchange" or the "ISE") filed with the Securities and Exchange Commission ("Commission") the proposed rule change as described in Items I and II below, which items have been prepared by the Exchange. The Exchange has filed the proposal as a "non-controversial" proposed rule change pursuant to Section 19(b)(3)(A)(iii) of the Act[3] and Rule 19b–4(f)(6) thereunder.[4] The Commission is publishing this notice to solicit comments on the proposed rule change from interested persons.

I. Self-Regulatory Organization's Statement of the Terms of Substance of the Proposed Rule Change

The Exchange is proposing to amend its rules to implement a broadcast message that will inform market participants when a non-marketable all-or-none limit order is placed on the limit order book. The text of the proposed rule change is as follows, with deletions in [brackets] and additions *italicized:*

Rule 717. Limitations on Orders

* * * * *

Supplementary Material to Rule 717

.01–.03 No Change.

.04 A non-marketable all-or-none limit order shall be deemed "exposed" for the purposes of paragraphs (d) and (e) one second following a broadcast notifying market participants that such an order to buy or sell a specified number of contracts at a specified price has been received in the options series. This provision shall be in effect on a pilot basis expiring [December 31, 2009] *January 31, 2010.*

* * * * *

[1] 15 U.S.C. 78s(b)(1).

[2] 17 CFR 240.19b–4.

[3] 15 U.S.C. 78s(b)(3)(A).

[4] 17 CFR 240.19b–4(f)(6).

II. Self-Regulatory Organization's Statement of the Purpose of, and Statutory Basis for, the Proposed Rule Change

In its filing with the Commission, the self-regulatory organization included statements concerning the purpose of, and basis for, the proposed rule change and discussed any comments it received on the proposed rule change. The text of these statements may be examined at the places specified in Item IV below. The self-regulatory organization has prepared summaries, set forth in sections A, B and C below, of the most significant aspects of such statements.

A. Self-Regulatory Organization's Statement of the Purpose of, and Statutory Basis for, the Proposed Rule Change

(a) *Purpose*—Pursuant to ISE Rule 717(d) and (e), Electronic Access Members must expose agency orders on the Exchange for at least one second before entering a contra-side proprietary order or a contra-side order that was solicited from a broker-dealer, or utilize one of the Exchange's execution mechanisms that have one second exposure periods built into the functionality.[5]

The Exchange operates an integrated system that consolidates all market maker quotes and orders, and automatically disseminates the best bid and offer. If a limit order is designated as all-or-none ("AON"), the contingency that the order must be executed in full makes it ineligible for display in the best bid or offer. Nevertheless, such orders are maintained in the system and remain available for execution after all other trading interest at the same price has been exhausted.[6] Upon the receipt of a non-marketable all-or-none limit order, the system automatically will send a broadcast message to all market participants notifying them that an all-or-none order to buy or to sell a specified number of contracts at a specified price has been placed on the book.

On July 9, 2009, the Exchange adopted a proposed rule change on a three-month pilot basis to specify that a non-marketable all-or-none limit order is deemed "exposed" for the purposes of Rule 717(d) and (e) one second following a broadcast notifying members that such an order to buy or sell a specified number of contracts at a specified price has been received in the options series.[7] The Exchange subsequently extended the pilot for an additional month,[8] and then extended it again through December 31, 2009.[9] During the last extension, the broadcast message was made available to any market participant, not just members.[10] Thus, all of the terms of the order are disclosed to all market participants. The Exchange now proposes to extend the pilot until January 31, 2010.

(b) *Basis*—The basis under the Securities Exchange Act of 1934 ("Exchange Act") for this proposed rule change is the requirement under Section 6(b)(5) that an exchange have rules that are designed to promote just and equitable principles of trade, and to remove impediments to and perfect the mechanism for a free and open market and a national market system, and in general, to protect investors and the public interest. In particular, under the proposed rule change all-or-none orders will continue to be exposed to all market participants so that there is a greater opportunity for them to interact with such orders.

B. Self-Regulatory Organization's Statement on Burden on Competition

The proposed rule change does not impose any burden on competition that is not necessary or appropriate in furtherance of the purposes of the Act.

C. Self-Regulatory Organization's Statement on Comments on the Proposed Rule Change Received From Members, Participants or Others

The Exchange has not solicited, and does not intend to solicit, comments on this proposed rule change. The Exchange has not received any unsolicited written comments from members or other interested parties.

III. Date of Effectiveness of the Proposed Rule Change and Timing for Commission Action

Because the proposed rule change: (i) Does not significantly affect the protection of investors or the public interest; (ii) does not impose any significant burden on competition; and (iii) does not become operative for 30

[5] *See* ISE Rule 716(d) (Facilitation Mechanism), Rule 716(e) (Solicited Order Mechanism) and Rule 723 (Price Improvement Mechanism for Crossing Transactions).

[6] Supplementary Material .02 to ISE Rule 713.

[7] *See* Exchange Act Release No. 60311 (July 15, 2009), 74 FR 36290 (July 22, 2009).

[8] *See* Exchange Act Release No. 60866 (October 22, 2009), 74 FR 55879 (October 29, 2009).

[9] *See* Exchange Act Release No. 61016 (November 17, 2009), 74 FR 61393 (November 24, 2009).

[10] The AON broadcast message is available through the Exchange's application programming interface ("API"). Any member or non-member connecting to the API can receive the AON broadcast message. The Exchange is not proposing to adopt a fee associated with receiving this message, and any future fee would be filed with the Commission.

days after the date of the filing, or such shorter time as the Commission may designate if consistent with the protection of investors and the public interest, the proposed rule change has become effective pursuant to Section 19(b)(3)(A) of the Act[11] and Rule 19b–4(f)(6) thereunder.[12]

A proposed rule change filed under Rule 19b–4(f)(6) normally may not become operative prior to 30 days after the date of filing.[13] However, Rule 19b–4(f)(6)(iii)[14] permits the Commission to designate a shorter time if such action is consistent with the protection of investors and the public interest. ISE has requested that the Commission waive the 30-day operative delay. The Commission notes that waiver of the operative delay will permit the pilot to continue until January 31, 2010 without further delay, and will provide all market participants with the opportunity to receive ISE's broadcast message with information about the terms of new AON orders. The Commission also notes that no comments were received to date on the existing pilot. For these reasons, the Commission believes that waiving the 30-day operative delay is consistent with the protection of investors and the public interest, and designates the proposed rule change to be operative upon filing with the Commission.[15]

At any time within 60 days of the filing of the proposed rule change, the Commission may summarily abrogate such rule change if it appears to the Commission that such action is necessary or appropriate in the public interest, for the protection of investors, or otherwise in furtherance of the purposes of the Act.

IV. Solicitation of Comments

Interested persons are invited to submit written data, views, and arguments concerning the foregoing, including whether the proposed rule change is consistent with the Act. Comments may be submitted by any of the following methods:

Electronic Comments

- Use the Commission's Internet comment form *(http://www.sec.gov/rules/sro.shtml);* or
- Send an e-mail to *rule-comments@sec.gov.* Please include File No. SR–ISE–2009–112 on the subject line.

Paper Comments

- Send paper comments in triplicate to Elizabeth M. Murphy, Secretary, Securities and Exchange Commission, 100 F Street, NE., Washington, DC 20549–1090.

All submissions should refer to File No. SR–ISE–2009–112. This file number should be included on the subject line if e-mail is used. To help the Commission process and review your comments more efficiently, please use only one method. The Commission will post all comments on the Commission's Internet Web site *(http://www.sec.gov/rules/sro.shtml).* Copies of the submission, all subsequent amendments, all written statements with respect to the proposed rule change that are filed with the Commission, and all written communications relating to the proposed rule change between the Commission and any person, other than those that may be withheld from the public in accordance with the provisions of 5 U.S.C. 552, will be available for inspection and copying in the Commission's Public Reference Room, 100 F Street, NE., Washington, DC 20549, on official business days between the hours of 10 a.m. and 3 p.m. Copies of such filing also will be available for inspection and copying at the principal office of ISE. All comments received will be posted without change; the Commission does not edit personal identifying information from submissions. You should submit only information that you wish to make available publicly. All submissions should refer to File No. SR–ISE–2009–112 and should be submitted on or before February 1, 2010.

For the Commission, by the Division of Trading and Markets, pursuant to delegated authority.[16]

Florence E. Harmon,

Deputy Secretary.

[FR Doc. 2010–239 Filed 1–8–10; 8:45 am]

BILLING CODE 8011–01–P

[11] 15 U.S.C. 78s(b)(3)(A).

[12] 17 CFR 240.19b–4(f)(6).

[13] 17 CFR 240.19b–4(f)(6)(iii). In addition, Rule 19b–4(f)(6)(iii) requires that a self-regulatory organization submit to the Commission written notice of its intent to file the proposed rule change, along with a brief description and text of the proposed rule change, at least five business days prior to the date of filing of the proposed rule change, or such shorter time as designated by the Commission. The Exchange satisfied this requirement.

[14] *Id.*

[15] For the purposes only of waiving the 30-day operative delay, the Commission has considered the proposed rule's impact on efficiency, competition, and capital formation. *See* 15 U.S.C. 78c(f).

[16] 17 CFR 200.30–3(a)(12).

SECURITIES AND EXCHANGE COMMISSION

[Release No. 34–61284; File No. SR–NFA–2009–02]

Self-Regulatory Organizations; National Futures Association; Notice of Filing and Immediate Effectiveness of a Proposed Change to the Interpretive Notice Regarding Security Futures Products Proficiency Training

January 4, 2010.

Pursuant to Section 19(b)(7) of the Securities Exchange Act of 1934 ("Act")[1] and Rule 19b–7 under the Act[2] notice is hereby given that on December 11, 2009, National Futures Association ("NFA") filed with the Securities and Exchange Commission ("SEC" or "Commission") the proposed rule change as described in Items I, II, and III below, which Items have been prepared by the self-regulatory organization. The Commission is publishing this notice to solicit comments on the proposed rule change from interested persons. NFA concurrently filed the proposed rule change with the Commodity Futures Trading Commission ("CFTC").[3]

I. Self-Regulatory Organization's Description of the Proposed Rule Change

The amendments to the Interpretive Notice titled "NFA Compliance Rules 2–7 and 2–24 and Registration Rule 401: Proficiency Requirements for Security Futures Products" extend the relief from having to take a proficiency exam to engage in security futures activities from December 31, 2009 to December 31, 2012.

A copy of this filing is available on the Exchange's Web site at *http://www.nfa.futures.org*, on the Commission's Web site at *http://www.sec.gov*, the Exchange's principal office and at the Commission's Public Reference Room.

II. Self-Regulatory Organization's Statement of the Purpose of, and Statutory Basis for, the Proposed Rule Change

In its filing with the Commission, the self-regulatory organization included statements concerning the purpose of, and basis for, the proposed rule change and discussed any comments it received

[1] 15 U.S.C. 78s(b)(7).

[2] 17 CFR 240.19b–7.

[3] On December 31, 2009, NFA filed an update to the proposed rule change to indicate that the CFTC, by letter dated December 28, 2009, advised NFA that the CFTC had determined not to review the proposal and that NFA was permitted to make the proposal effective as of December 28, 2009.

on the proposed rule change. The text of those statements may be examined at the places specified in Item IV below. NFA has prepared summaries, set forth in sections A, B, and C below, of the most significant parts of such statements.

A. Self-Regulatory Organization's Statement of the Purpose of, and Statutory Basis for, the Proposed Rule Change

1. Purpose

Section 15A(k) of the Act[4] makes NFA a national securities association for the limited purpose of regulating the activities of NFA Members ("Members") who are registered as brokers or dealers under Section 15(b)(11) of the Act.[5]

The Commodity Futures Modernization Act of 2000 amended the Securities Exchange Act of 1934 to require NFA to "have rules that ensure that members and natural persons associated with members meet such standards of training, experience, and competence necessary to effect transactions in security futures products ("SFPs") and are tested for their knowledge of securities and securities futures products."[6] In 2001 NFA and FINRA (then NASD) adopted temporary relief allowing registrants to qualify to engage in security futures activities by completing a training program rather than by taking an exam. The relief was extended twice and is currently set to expire on December 31, 2009.

At its November 19, 2009 meeting, the Board approved amendments to the Interpretive Notice regarding proficiency requirements for security futures products. At that meeting, the Board also gave the Executive Committee authority to make any changes requested by the CFTC or the SEC. The CFTC and SEC have asked that the proposal adopted by the Board be modified and the Executive Committee has approved the modified proposal.

NFA and FINRA proposed the two prior extensions, and the CFTC and SEC agreed to them, because of the low trading volume in SFPs and the relatively few registrants engaging in security futures activities. These characteristics continue to make the imposition of a qualifications exam an inefficient option today. Accordingly, the proposal revises the Interpretive Notice to extend the relief from having to take an exam from December 31, 2009 to December 31, 2012.[7]

Amendments to the Interpretive Notice regarding Security Futures Products Proficiency Training were previously filed in SR–NFA–2002–04, SR–NFA–2003–03, SR–NFA–2006–04 and SR–NFA–2007–07.

2. Statutory Basis

The rule change is authorized by, and consistent with, Section 15A(k)(2)(D) of the Act.[8] That Section requires NFA to "have rules that ensure that members and natural persons associated with members meet such standards of training, experience, and competence necessary to effect transactions in SFPs and are tested for their knowledge of securities and securities futures products." Although the proposal extends relief from having to take an exam to engage in security futures activities, it still requires that training be completed before entering into such activities.

B. Self-Regulatory Organization's Statement on Burden on Competition

NFA does not believe that the proposed rule change will have an impact on competition.

C. Self-Regulatory Organization's Statement on Comments on the Proposed Rule Change Received From Members, Participants, or Others

Comments on the NFA proposed rule change have not been solicited and none have been received.

III. Date of Effectiveness of the Proposed Rule Change and Timing for Commission Action

The proposed rule change will become effective on December 28, 2009. At any time within 60 days of the date of effectiveness of the proposed rule change, the Commission, after consultation with the CFTC, may summarily abrogate the proposed rule change and require that the proposed rule change be refilled in accordance with the provisions of Section 19(b)(1) of the Act.[9]

IV. Solicitation of Comments

Interested persons are invited to submit written data, views, and arguments concerning the foregoing, including whether the proposed rule change is consistent with the Act. Comments may be submitted by any of the following methods:

Electronic Comments

- Use the Commission's Internet comment form *(http://www.sec.gov/rules/sro.shtml);* or
- Send an e-mail to *rule-comments@sec.gov.* Please include File Number SR–NFA–2009–02 on the subject line.

Paper Comments

- Send paper comments in triplicate to Elizabeth M. Murphy, Secretary, Securities and Exchange Commission, 100 F Street, NE., Washington, DC 20549–1090.

All submissions should refer to File Number SR–NFA–2009–02. This file number should be included on the subject line if e-mail is used. To help the Commission process and review your comments more efficiently, please use only one method. The Commission will post all comments on the Commission's Internet Web site (*http://www.sec.gov/rules/sro.shtml*). Copies of the submission, all subsequent amendments, all written statements with respect to the proposed rule change that are filed with the Commission, and all written communications relating to the proposed rule change between the Commission and any person, other than those that may be withheld from the public in accordance with the provisions of 5 U.S.C. 552, will be available for inspection and copying in the Commission's Public Reference Room, 100 F Street, NE., Washington, DC 20549, on official business days between the hours of 10 a.m. and 3 p.m. Copies of the filing also will be available for inspection and copying at the principal office of the Exchange. All comments received will be posted without change; the Commission does not edit personal identifying information from submissions. You should submit only information that you wish to make available publicly. All submissions should refer to File Number SR–NFA–2009–02 and should be submitted on or before February 1, 2010.

For the Commission, by the Division of Trading and Markets, pursuant to delegated authority.[10]

Florence E. Harmon,

Deputy Secretary.

[FR Doc. 2010–238 Filed 1–8–10; 8:45 am]

BILLING CODE 8011–01–P

[4] 15 U.S.C. 78o–3(k).

[5] 15 U.S.C. 78o(b)(11).

[6] Section 15A(k)(2)(D) of the Exchange Act.

[7] FINRA recently amended its rules to incorporate the same three-year extension. *See* Securities Exchange Act Release. No. 61231 (December 23, 2009), 74 FR 691731 (December 30, 2009) (SR–FINRA–2009–092).

[8] 15 U.S.C. 78o–3(k)(2)(D).

[9] 15 U.S.C. 78s(b)(1).

[10] 17 CFR 200.30–3(a)(12).

SECURITIES AND EXCHANGE COMMISSION

[Release No. 34–61282; File No. SR–Phlx–2009–110]

Self-Regulatory Organizations; NASDAQ OMX PHLX, Inc.; Notice of Filing and Immediate Effectiveness of a Proposed Rule Change To Allow All SPY and IWM Option Series To Quote in Penny Increments

January 4, 2010.

Pursuant to Section 19(b)(1) of the Securities Exchange Act of 1934 ("Act") [1] and Rule 19b–4 [2] thereunder, notice is hereby given that on December 24, 2009, NASDAQ OMX PHLX, Inc. ("Phlx" or "Exchange") filed with the Securities and Exchange Commission ("SEC" or "Commission") the proposed rule change as described in Items I, II, and III below, which Items have been prepared by the Exchange. The Commission is publishing this notice to solicit comments on the proposed rule change from interested persons.

I. Self-Regulatory Organization's Statement of the Terms of Substance of the Proposed Rule Change

The Exchange is filing with the Commission a proposal to quote all series of options on SPDR S&P 500 Exchange Traded Funds (SPY) and options on iShares Russell 2000 Index Funds (IWM) in penny increments ($0.01) pursuant to the Penny Pilot ("Penny Pilot" or "Pilot"), effective February 1, 2010.[3] This date corresponds with the phase-in date for additional classes for the Penny Pilot.

The Exchange requests that the Commission waive the 30-day operative delay period contained in Exchange Act Rule 19b-4(f)(6)(iii).[4]

The text of the proposed rule change is available on the Exchange's Web site at *http://nasdaqomxphlx.cchwallstreet.com/NASDAQOMXPHLX/Filings/,* at the principal office of the Exchange, and at the Commission's Public Reference Room.

II. Self-Regulatory Organization's Statement of the Purpose of, and Statutory Basis for, the Proposed Rule Change

In its filing with the Commission, the Exchange included statements concerning the purpose of and basis for the proposed rule change and discussed any comments it received on the proposed rule change. The text of these statements may be examined at the places specified in Item IV below. The Exchange has prepared summaries, set forth in Sections A, B, and C below, of the most significant aspects of such statements.

A. Self-Regulatory Organization's Statement of the Purpose of, and the Statutory Basis for, the Proposed Rule Change

1. Purpose

The purpose of this filing is to enable the Exchange to quote all series of options on SPDR S&P 500 Exchange Traded Funds ("SPY") and options on iShares Russell 2000 Index Funds ("IWM") in penny increments pursuant to the Penny Pilot, effective February 1, 2010.

In the Exchange's immediately effective filing to extend and expand the Penny Pilot through December 31, 2010, the Exchange proposed expanding the Pilot four times on a quarterly basis.[5] In addition to sixty-three options classes that were in the Penny Pilot, the Exchange has recently added the next seventy-five most actively traded multiply listed options classes based on the national average daily volume ("ADV") for the six months prior to selection, closing under $200 per share on the Expiration Friday prior to expansion.[6] The minimum quotation variation for all classes included in the Pilot, except for options on PowerShares QQQ ("QQQQ"),[7] is $0.01 for all quotations in option series that are quoted at less than $3.00 per contract, and $0.05 for all quotations in option series that are quoted at $3.00 or greater. Thus, the current minimum quoting increment for bids and offers in SPY and IWM is $0.01 for all options series below $3.00 and $0.05 for all options series $3.00 and above.

The Exchange now proposes to eliminate the $3.00 breakpoint that exists for SPY and IWM and designate all options series of SPY and IWM as eligible to quote in $0.01 increments, regardless of premium value. The Exchange will communicate the proposed change to its membership via an Options Trader Alert ("OTA") posted on the Exchange's web site.

The Exchange notes that although the Pilot has contributed to some increase in quote message traffic, it has been manageable by the Exchange and the Options Price Reporting Authority ("OPRA"), with no significant disruption in the dissemination of pricing information. The Exchange believes that the benefits to public customers and other market participants who are able to express their true prices to buy and sell options have been demonstrated to outweigh the increase in quote traffic. Moreover, the Exchange's rule change proposal is sufficiently limited such that it is unlikely to increase quotation message traffic beyond the capacity of the Exchange's or OPRA's systems, or to disrupt the timely dissemination of information.

The Exchange believes that its proposal to eliminate the breakpoint for penny quoting of all SPY and IWM option series should facilitate the continuing narrowing of spreads, thereby lowering costs to the benefit of investors.

2. Statutory Basis

The Exchange believes that its proposal is consistent with Section 6(b) of the Act [8] in general, and furthers the objectives of Section 6(b)(5) of the Act [9] in particular, in that it is designed to prevent fraudulent and manipulative acts and practices, to promote just and equitable principles of trade, to foster cooperation and coordination with persons engaged in facilitating transactions in securities, and to remove impediments to and perfect the mechanisms of a free and open market and a national market system by allowing all SPY and IWM option series to quote in penny intervals.

B. Self-Regulatory Organization's Statement on Burden on Competition

The Exchange does not believe that the proposed rule change will impose any burden on competition that is not

[1] 15 U.S.C. 78s(b)(1).

[2] 17 CFR 240.19b–4.

[3] The Penny Pilot was established in March 2008 and in October 2009 was expanded and extended through December 31, 2010. *See* Securities Exchange Act Release Nos. 57579 (March 28, 2008), 73 FR 18587 (April 4, 2008) (SR–NASDAQ–2008–026) (notice of filing and immediate effectiveness establishing Penny Pilot); and 60874 (October 23, 2009), 74 FR 56682 (November 2, 2009) (SR–NASDAQ–2009–091) (notice of filing and immediate effectiveness expanding and extending Penny Pilot through December 31, 2010). *See also* Securities Exchange Act Release No. 60965 (November 9, 2009), 74 FR 59292 (November 17, 2009) (SR–NASDAQ–2009–097) (notice of filing and immediate effectiveness adding seventy-five classes to Penny Pilot) [sic].

[4] 17 CFR 240.19b-4(f)(6)(iii).

[5] *See* Securities Exchange Act Release No. 60873 (October 23, 2009), 74 FR 56675 (November 2, 2009) (SR–Phlx–2009–91) (notice of filing and immediate effectiveness).

[6] The month immediately preceding the addition of options to the Penny Pilot was not used for the purpose of the six month analysis, and index option products were included only if the underlying index levels were under 200. *See* Securities Exchange Act Release No. 60966 (November 9, 2009), 74 FR 59331 (November 17, 2009) (SR–Phlx–2009–94) (notice of filing and immediate effectiveness).

[7] Options on QQQQ are quoted in $0.01 increments for all series.

[8] 15 U.S.C. 78f(b).

[9] 15 U.S.C. 78f(b)(5).

necessary or appropriate in furtherance of the purposes of the Act.

C. Self-Regulatory Organization's Statement on Comments on the Proposed Rule Change Received From Members, Participants or Others

No written comments were either solicited or received.

III. Date of Effectiveness of the Proposed Rule Change and Timing for Commission Action

The Exchange believes that the foregoing proposed rule change may take effect upon filing with the Commission pursuant to Section 19(b)(3)(A) [10] of the Act and Rule 19b–4(f)(6)(iii) thereunder [11] because the foregoing proposed rule change does not: (i) Significantly affect the protection of investors or the public interest; (ii) impose any significant burden on competition; and (iii) become operative prior to 30 days from the date on which it was filed, or such shorter time as the Commission may designate.[12]

At any time within 60 days of the filing of the proposed rule change, the Commission may summarily abrogate such rule change if it appears to the Commission that such action is necessary or appropriate in the public interest, for the protection of investors, or otherwise in furtherance of the purposes of the Act.

IV. Solicitation of Comments

Interested persons are invited to submit written data, views, and arguments concerning the foregoing, including whether the proposed rule change is consistent with the Act. Comments may be submitted by any of the following methods:

Electronic Comments

- Use the Commission's Internet comment form *(http://www.sec.gov/rules/sro.shtml);* or
- Send an e-mail to *rule-comments@sec.gov.* Please include File Number SR–Phlx–2009–110 on the subject line.

Paper Comments

- Send paper comments in triplicate to Elizabeth M. Murphy, Secretary, Securities and Exchange Commission, 100 F Street, NE., Washington, DC 20549–1090.

All submissions should refer to File Number SR–Phlx–2009–110. This file number should be included on the subject line if e-mail is used. To help the Commission process and review your comments more efficiently, please use only one method. The Commission will post all comments on the Commission's Internet Web site *(http://www.sec.gov/rules/sro.shtml).* Copies of the submission, all subsequent amendments, all written statements with respect to the proposed rule change that are filed with the Commission, and all written communications relating to the proposed rule change between the Commission and any person, other than those that may be withheld from the public in accordance with the provisions of 5 U.S.C. 552, will be available for inspection and copying in the Commission's Public Reference Room, 100 F Street, NE., Washington, DC 20549, on official business days between the hours of 10 a.m. and 3 p.m. Copies of the filing also will be available for inspection and copying at the principal office of the self-regulatory organization. All comments received will be posted without change; the Commission does not edit personal identifying information from submissions. You should submit only information that you wish to make available publicly. All submissions should refer to File Number SR–Phlx–2009–110 and should be submitted on or before February 1, 2010.

For the Commission, by the Division of Trading and Markets, pursuant to delegated authority.[13]

Florence E. Harmon,

Deputy Secretary.

[FR Doc. 2010–205 Filed 1–8–10; 8:45 am]

BILLING CODE 8011–01–P

[10] 15 U.S.C. 78s(b)(3)(A).

[11] 17 CFR 240.19b–4(f)(6)(iii).

[12] 17 CFR 240.19b–4(f)(6)(iii). In addition, Rule 19b-4(f)(6)(iii) requires the Exchange to give the Commission written notice of the Exchange's intent to file the proposed rule change along with a brief description and the text of the proposed rule change, at least five business days prior to the date of filing of the proposed rule change, or such shorter time as designated by the Commission. The Exchange has satisfied this requirement.

[13] 17 CFR 200.30–3(a)(12).

SECURITIES AND EXCHANGE COMMISSION

[Release No. 34–61281; File No. SR–NASDAQ–2009–115]

Self-Regulatory Organizations; The NASDAQ Stock Market LLC; Notice of Filing and Immediate Effectiveness of a Proposed Rule Change To Allow All SPY and IWM Option Series To Quote in Penny Increments

January 4, 2010.

Pursuant to Section 19(b)(1) of the Securities Exchange Act of 1934 ("Act") [1] and Rule 19b–4 [2] thereunder, notice is hereby given that on December 24, 2009, The NASDAQ Stock Market LLC ("Nasdaq") filed with the Securities and Exchange Commission ("SEC" or "Commission") the proposed rule change as described in Items I, II, and III below, which Items have been prepared by Nasdaq. The Commission is publishing this notice to solicit comments on the proposed rule change from interested persons.

I. Self-Regulatory Organization's Statement of the Terms of Substance of the Proposed Rule Change

Nasdaq is filing with the Securities and Exchange Commission ("SEC" or "Commission") a proposal for the NASDAQ Options Market ("NOM" or "Exchange") to quote all series of options on SPDR S&P 500 Exchange Traded Funds (SPY) and options on iShares Russell 2000 Index Funds (IWM) in penny increments ($0.01) pursuant to the Penny Pilot ("Penny Pilot" or "Pilot"), effective February 1, 2010.[3] This date corresponds with the phase-in date for additional classes for the Penny Pilot.

The Exchange requests that the Commission waive the 30-day operative delay period contained in Exchange Act Rule 19b–4(f)(6)(iii).[4]

The text of the proposed rule change is available from Nasdaq's Web site at *http://nasdaq.cchwallstreet.com/Filings/* at Nasdaq's principal office, and at the Commission's Public Reference Room.

II. Self-Regulatory Organization's Statement of the Purpose of, and Statutory Basis for, the Proposed Rule Change

In its filing with the Commission, Nasdaq included statements concerning the purpose of and basis for the proposed rule change and discussed any comments it received on the proposed rule change. The text of these statements may be examined at the places specified

[1] 15 U.S.C. 78s(b)(1).

[2] 17 CFR 240.19b–4.

[3] The Penny Pilot was established in March 2008 and in October 2009 was expanded and extended through December 31, 2010. *See* Securities Exchange Act Release Nos. 57579 (March 28, 2008), 73 FR 18587 (April 4, 2008) (SR–NASDAQ–2008–026) (notice of filing and immediate effectiveness establishing Penny Pilot); and 60874 (October 23, 2009), 74 FR 56682 (November 2, 2009) (SR–NASDAQ–2009–091) (notice of filing and immediate effectiveness expanding and extending Penny Pilot through December 31, 2010). *See also* Securities Exchange Act Release No. 60965 (November 9, 2009), 74 FR 59292 (November 17, 2009) (SR–NASDAQ–2009–097) (notice of filing and immediate effectiveness adding seventy-five classes to Penny Pilot).

[4] 17 CFR 240.19b–4(f)(6)(iii).

in Item IV below. Nasdaq has prepared summaries, set forth in Sections A, B, and C below, of the most significant aspects of such statements.

A. Self-Regulatory Organization's Statement of the Purpose of, and the Statutory Basis for, the Proposed Rule Change

1. Purpose

The purpose of this filing is to enable the Exchange to quote all series of options on SPDR S&P 500 Exchange Traded Funds ("SPY") and options on iShares Russell 2000 Index Funds ("IWM") in penny increments pursuant to the Penny Pilot, effective February 1, 2010.

In the Exchange's immediately effective filing to extend and expand the Penny Pilot through December 31, 2010, the Exchange proposed expanding the Pilot four times on a quarterly basis.[5] In addition to sixty-three options classes that were in the Penny Pilot, the Exchange has recently added the next seventy-five most actively traded multiply listed options classes based on the national average daily volume ("ADV") for the six months prior to selection, closing under $200 per share on the Expiration Friday prior to expansion.[6] The minimum quotation variation for all classes included in the Pilot, except for options on PowerShares QQQ ("QQQQ"),[7] is $0.01 for all quotations in option series that are quoted at less than $3.00 per contract, and $0.05 for all quotations in option series that are quoted at $3.00 or greater. Thus, the current minimum quoting increment for bids and offers in SPY and IWM is $0.01 for all options series below $3.00 and $0.05 for all options series $3.00 and above.

The Exchange now proposes to eliminate the $3.00 breakpoint that exists for SPY and IWM and designate all options series of SPY and IWM as eligible to quote in $0.01 increments, regardless of premium value. The Exchange will communicate the proposed change to its membership via an Options Trader Alert ("OTA") posted on the Exchange's Web site.

The Exchange notes that although the Pilot has contributed to some increase in quote message traffic, it has been manageable by the Exchange and the Options Price Reporting Authority ("OPRA"), with no significant disruption in the dissemination of pricing information. The Exchange believes that the benefits to public customers and other market participants who are able to express their true prices to buy and sell options have been demonstrated to outweigh the increase in quote traffic. Moreover, the Exchange's rule change proposal is sufficiently limited such that it is unlikely to increase quotation message traffic beyond the capacity of the Exchange's or OPRA's systems, or to disrupt the timely dissemination of information.

The Exchange believes that its proposal to eliminate the breakpoint for penny quoting of all SPY and IWM option series should facilitate the continuing narrowing of spreads, thereby lowering costs to the benefit of investors.

2. Statutory Basis

The Exchange believes that its proposal is consistent with Section 6(b) of the Act[8] in general, and furthers the objectives of Section 6(b)(5) of the Act[9] in particular, in that it is designed to prevent fraudulent and manipulative acts and practices, to promote just and equitable principles of trade, to foster cooperation and coordination with persons engaged in facilitating transactions in securities, and to remove impediments to and perfect the mechanisms of a free and open market and a national market system by allowing all SPY and IWM option series to quote in penny intervals.

B. Self-Regulatory Organization's Statement on Burden on Competition

Nasdaq does not believe that the proposed rule change will result in any burden on competition that is not necessary or appropriate in furtherance of the purposes of the Act.

C. Self-Regulatory Organization's Statement on Comments on the Proposed Rule Change Received From Members, Participants or Others

Written comments were neither solicited nor received.

III. Date of Effectiveness of the Proposed Rule Change and Timing for Commission Action

The Exchange believes that the foregoing proposed rule change may take effect upon filing with the Commission pursuant to Section 19(b)(3)(A)[10] of the Act and Rule 19b–4(f)(6)(iii) thereunder[11] because the foregoing proposed rule change does not: (i) Significantly affect the protection of investors or the public interest; (ii) impose any significant burden on competition; and (iii) become operative prior to 30 days from the date on which it was filed, or such shorter time as the Commission may designate.[12]

At any time within 60 days of the filing of the proposed rule change, the Commission may summarily abrogate such rule change if it appears to the Commission that such action is necessary or appropriate in the public interest, for the protection of investors, or otherwise in furtherance of the purposes of the Act.

IV. Solicitation of Comments

Interested persons are invited to submit written data, views, and arguments concerning the foregoing, including whether the proposed rule change is consistent with the Act. Comments may be submitted by any of the following methods:

Electronic Comments

- Use the Commission's Internet comment form *(http://www.sec.gov/rules/sro.shtml);* or
- Send an e-mail to *rule-comments@sec.gov.* Please include File Number SR–NASDAQ–2009–115 on the subject line.

Paper Comments

- Send paper comments in triplicate to Elizabeth M. Murphy, Secretary, Securities and Exchange Commission, 100 F Street, NE., Washington, DC 20549–1090.

All submissions should refer to File Number SR–NASDAQ–2009–115. This file number should be included on the subject line if e-mail is used. To help the Commission process and review your comments more efficiently, please use only one method. The Commission will post all comments on the Commission's Internet Web site (*http://www.sec.gov/rules/sro.shtml*). Copies of the submission, all subsequent amendments, all written statements

[5] *See* Securities Exchange Act Release No. 60874 (October 23, 2009), 74 FR 56682 (November 2, 2009) (SR–NASDAQ–2009–091) (notice of filing and immediate effectiveness).

[6] The month immediately preceding the addition of options to the Penny Pilot was not used for the purpose of the six month analysis, and index option products were included only if the underlying index levels were under 200. *See* Securities Exchange Act Release No. 60965 (November 9, 2009), 74 FR 59292 (November 17, 2009) (SR–NASDAQ–2009–097) (notice of filing and immediate effectiveness).

[7] Options on QQQQ are quoted in $0.01 increments for all series.

[8] 15 U.S.C. 78f(b).

[9] 15 U.S.C. 78f(b)(5).

[10] 15 U.S.C. 78s(b)(3)(A).

[11] 17 CFR 240.19b–4(f)(6)(iii).

[12] 17 CFR 240.19b–4(f)(6)(iii). In addition, Rule 19b–4(f)(6)(iii) requires the Exchange to give the Commission written notice of the Exchange's intent to file the proposed rule change along with a brief description and the text of the proposed rule change, at least five business days prior to the date of filing of the proposed rule change, or such shorter time as designated by the Commission. The Exchange has satisfied this requirement.

with respect to the proposed rule change that are filed with the Commission, and all written communications relating to the proposed rule change between the Commission and any person, other than those that may be withheld from the public in accordance with the provisions of 5 U.S.C. 552, will be available for inspection and copying in the Commission's Public Reference Room, 100 F Street, NE., Washington, DC 20549, on official business days between the hours of 10 a.m. and 3 p.m. Copies of the filing also will be available for inspection and copying at the principal office of the self-regulatory organization. All comments received will be posted without change; the Commission does not edit personal identifying information from submissions. You should submit only information that you wish to make available publicly. All submissions should refer to File Number SR–NASDAQ–2009–115 and should be submitted on or before February 1, 2010.

For the Commission, by the Division of Trading and Markets, pursuant to delegated authority.[13]

Florence E. Harmon,

Deputy Secretary.

[FR Doc. 2010–204 Filed 1–8–10; 8:45 am]

BILLING CODE 8011–01–P

[13] 17 CFR 200.30–3(a)(12).

SECURITIES AND EXCHANGE COMMISSION

[Release No. 34–61283; File No. SR–BX–2009–082]

Self-Regulatory Organizations; NASDAQ OMX BX; Notice of Filing and Immediate Effectiveness of a Proposed Rule Change To Facilitate Annual Membership Billing Conducted by BX Using the FINRA CRD System

January 4, 2010.

Pursuant to Section 19(b)(1) of the Securities Exchange Act of 1934 ("Act"),[1] and Rule 19b–4 thereunder,[2] notice is hereby given that on December 14, 2009, NASDAQ OMX BX, Inc. (the "Exchange" or "BX") filed with the Securities and Exchange Commission ("Commission") the proposed rule change as described in Items I, II, and III below, which Items have been prepared by BX. BX has designated the proposed rule change as one that is concerned solely with the administration of the self-regulatory organization pursuant to Rule 19b–4(f)(3) under the Act,[3] which renders the proposal effective upon filing with the Commission. The Commission is publishing this notice to solicit comments on the proposed rule change from interested persons.

[1] 15 U.S.C. 78s(b)(1).

[2] 17 CFR 240.19b–4.

[3] 17 CFR 240.19b–4(f)(3).

I. Self-Regulatory Organization's Statement of the Terms of the Substance of the Proposed Rule Change

BX submits this proposed rule change to facilitate annual membership billing conducted by the Financial Industry Regulatory Authority ("FINRA") on behalf of BX.

II. Self-Regulatory Organization's Statement of the Purpose of, and Statutory Basis for, the Proposed Rule Change

In its filing with the Commission, BX included statements concerning the purpose of and basis for the proposed rule change and discussed any comments it received on the proposed rule change. The text of these statements may be examined at the places specified in Item IV below. BX has prepared summaries, set forth in Sections A, B, and C below, of the most significant aspects of such statements.

A. Self-Regulatory Organization's Statement of the Purpose of, and Statutory Basis for, the Proposed Rule Change

1. Purpose

BX is proposing to allow FINRA to deduct an annual $3,000 membership fee from Boston Options Exchange Group, LLC ("BOX") participants' CRD accounts and promptly refund the charge back to the same participants' accounts. Pursuant to a regulatory services agreement, FINRA is providing BX with certain regulatory services, including the collection of annual membership fees from BX members pursuant to BX Rule 7001(a). BOX participants are not subject to the BX annual membership fee. Due to a limitation with FINRA's systems, FINRA is unable to differentiate between BX members and BOX participants. As a consequence, FINRA must deduct the BX fee from both member and participant accounts. BX is proposing to promptly refund the charge to BOX participants after collection by FINRA. Specifically, after receipt of the lump sum payment from FINRA representing the collection of funds from both member and participant accounts, BX will provide to FINRA the BOX participant funds together with a list of each participant to which FINRA must remit pro-rata payment. BOX has provided its participants with notice of the impending charge and rebate.

2. Statutory Basis

The Exchange believes that the proposed rule change is consistent with the provisions of Section 6 of the Act,[4] in general and with Sections 6(b)(5) of the Act,[5] in particular, in that it is designed to prevent fraudulent and manipulative acts and practices, to promote just and equitable principles of trade, to foster cooperation and coordination with persons engaged in regulating, clearing, settling, processing information with respect to, and facilitating transactions in securities, to remove impediments to and perfect the mechanism of a free and open market and a national market system, and, in general, to protect investors and the public interest. The proposed change will facilitate FINRA's operation of the CRD system, while ensuring that BOX participants are not improperly charged a fee.

B. Self-Regulatory Organization's Statement on Burden on Competition

BX does not believe that the proposed rule change will impose any burden on competition not necessary or appropriate in furtherance of the purposes of the Act.

C. Self-Regulatory Organization's Statement on Comments on the Proposed Rule Change Received From Members, Participants, or Others

No written comments were either solicited or received.

III. Date of Effectiveness of the Proposed Rule Change and Timing for Commission Action

Pursuant to Section 19(b)(3)(A)(iii) of the Act[6] and Rule 19b–4(f)(3) thereunder,[7] the Exchange has designated this proposal as one that is concerned solely with the administration of the self-regulatory organization, which renders the proposed rule change effective upon filing.

IV. Solicitation of Comments

Interested persons are invited to submit written data, views, and arguments concerning the foregoing, including whether the proposed rule change is consistent with the Act. Comments may be submitted by any of the following methods:

[4] 15 U.S.C. 78f.

[5] 15 U.S.C. 78f(b)(5).

[6] 15 U.S.C. 78s(b)(3)(A)(iii).

[7] 17 CFR 240.19b–4(f)(3).

Electronic Comments

- Use the Commission's Internet comment form *(http://www.sec.gov/rules/sro.shtml);* or
- Send an e-mail to *rule-comments@sec.gov.* Please include File No. SR–BX–2009–082 on the subject line.

Paper Comments

- Send paper comments in triplicate to Elizabeth M. Murphy, Secretary, Securities and Exchange Commission, 100 F Street, NE., Washington, DC 20549–1090.

All submissions should refer to File No. SR–BX–2009–082. This file number should be included on the subject line if e-mail is used. To help the Commission process and review your comments more efficiently, please use only one method. The Commission will post all comments on the Commission's Internet Web site *(http://www.sec.gov/rules/sro.shtml).* Copies of the submission, all subsequent amendments, all written statements with respect to the proposed rule change that are filed with the Commission, and all written communications relating to the proposed rule change between the Commission and any person, other than those that may be withheld from the public in accordance with the provisions of 5 U.S.C. 552, will be available for inspection and copying in the Commission's Public Reference Room, 100 F Street, NE., Washington, DC 20549, on official business days between the hours of 10 a.m. and 3 p.m. Copies of such filing also will be available for inspection and copying at the principal office of BX. All comments received will be posted without change; the Commission does not edit personal identifying information from submissions. You should submit only information that you wish to make available publicly. All submissions should refer to File No. SR–BX–2009–082 and should be submitted on or before February 1, 2010.

For the Commission, by the Division of Trading and Markets, pursuant to delegated authority.[8]

Florence E. Harmon,

Deputy Secretary.

[FR Doc. 2010–195 Filed 1–8–10; 8:45 am]

BILLING CODE 8011–01–P

[8] 17 CFR 200.30–3(a)(12).

SECURITIES AND EXCHANGE COMMISSION

[Release No. 34–61274; File No. SR–CBOE–2009–089]

Self-Regulatory Organizations; Chicago Board Options Exchange, Incorporated; Order Approving a Proposed Rule Change Related to Stock-Option Orders

January 4, 2010.

I. Introduction

On November 18, 2009, the Chicago Board Options Exchange, Incorporated ("CBOE" or the "Exchange") filed with the Securities and Exchange Commission ("Commission"), pursuant to Section 19(b)(1) of the Securities Exchange Act of 1934 ("Act") [1] and Rule 19b–4 thereunder,[2] a proposed rule change to amend CBOE Rule 6.53C, Commentary .06(d) to modify the handling of market stock-option orders that cannot be filled in whole or in a permissible ratio at the conclusion of a complex order RFR auction ("COA"). The proposed rule change was published for comment in the **Federal Register** on December 4, 2009.[3] The Commission received no comments regarding the proposal. This order approves the proposed rule change.

II. Description of the Proposal

Under the CBOE's rules, eligible complex orders, including stock-option orders, may be subject to an automated COA process where the eligible order is exposed for possible price improvement.[4] Currently, if a complex order cannot be filled in whole or in a permissible ratio at the conclusion of COA, the order, or any remaining balance, will route to the CBOE's Complex Order Book or to PAR for manual handling.[5]

The Exchange proposes to revise CBOE Rule 6.53C, Interpretation and Policy .06(d), to modify the operation of the COA with respect to market stock-option orders, including market stock-option orders with more than one option leg, that cannot be executed in whole or in a permissible ratio at the conclusion of a COA. Specifically, the CBOE proposes to allow the Exchange to determine, on a class-by-class basis, to route the remaining balance of the option leg(s) of such an order to CBOE's Hybrid System for processing as a simple market order(s), consistent with CBOE's order execution rules, and to route the remaining balance of the stock leg of such an order to the CBOE Stock Exchange ("CBSX"), CBOE's stock facility, for processing as a market order, consistent with CBSX's order execution rules.[6] The CBOE will announce to members via Regulatory Circular any determination regarding the routing of market stock-option orders pursuant to the rule.[7]

III. Discussion and Commission Findings

The Commission finds that the proposed rule change is consistent with the requirements of the Act and the rules and regulations thereunder applicable to a national securities exchange.[8] In particular, the Commission finds that the proposal is consistent with Section 6(b)(5) of the Act,[9] which requires, among other things, that the rules of a national securities exchange be designed to promote just and equitable principles of trade, to remove impediments to and perfect the mechanism of a free and open market and a national market system and, in general, to protect investors and the public interest. The Commission believes that the proposal could help facilitate the execution of market stock-option orders, including market stock-option orders with more than one option leg, that are not filled in whole or in a permissible ratio at the conclusion of a COA. The Commission notes that the proposed rule applies solely to market stock-option orders. The Commission notes, further, that if the remaining balance of the option leg(s) and the stock leg of the market stock-option order are routed to the CBOE's Hybrid system and to CBSX, respectively, as provided in the proposed rule, the execution of the option leg(s) of the order on the CBOE's Hybrid system and the execution of the stock leg of the order on CBSX will be consistent with the order execution rules of CBOE and CBSX, respectively.

IV. Conclusion

It is therefore ordered, pursuant to Section 19(b)(2) of the Act,[10] that the proposed rule change (SR–CBOE–2009–089), be, and it hereby is, approved.

[1] 15 U.S.C. 78s(b)(1).

[2] 17 CFR 240.19b–4.

[3] *See* Securities Exchange Act Release No. 61068 (November 27, 2009), 74 FR 63807 ("Notice").

[4] *See* CBOE Rule 6.53C(d).

[5] *See* CBOE Rule 6.53C(d)(vi).

[6] *See* CBOE Rule 6.53C, Interpretation and Policy .06(d), and Notice, *supra* note 3.

[7] *See* Notice, *supra* note 3, at note 4.

[8] In approving this proposed rule change, the Commission has considered the proposed rule's impact on efficiency, competition, and capital formation. *See* 15 U.S.C. 78c(f).

[9] 15 U.S.C. 78f(b)(5).

[10] 15 U.S.C. 78s(b)(2).

[11] 17 CFR 200.30–3(a)(12).

For the Commission, by the Division of Trading and Markets, pursuant to delegated authority.[11]

Florence E. Harmon,

Deputy Secretary.

[FR Doc. 2010–190 Filed 1–8–10; 8:45 am]

BILLING CODE 8011–01–P

SECURITIES AND EXCHANGE COMMISSION

[Release No. 34–61275; File No. SR–NYSE–2009–112]

Self-Regulatory Organizations; New York Stock Exchange LLC; Order Approving a Proposed Rule Change Rescinding Information Memoranda 04–27 and 07–66 and Issuing a New Information Memo Concerning the Exchange's Gap Quote Policy

January 4, 2010.

I. Introduction

On November 9, 2009, the New York Stock Exchange LLC ("NYSE" or the "Exchange") filed with the Securities and Exchange Commission ("Commission"), pursuant to Section 19(b)(1) of the Securities Exchange Act of 1934 ("Act") [1] and Rule 19b–4 thereunder,[2] a proposed rule change to rescind NYSE Information Memoranda 04–27 and 07–66 and issue a new Information Memo that provides updated parameters for, and guidance on the application of, the Exchange's Gap Quote Policy (the "Policy"). In order to ensure an orderly transition to usage of the new parameters, the Exchange has proposed that these changes be made operative ten business days after the date of this order. The proposed rule change was published for comment in the **Federal Register** on December 1, 2009.[3] The Commission received no comment letters on the proposal. This order approves the proposed rule change.

II. Description of the Proposal [4]

The purpose of the Policy is to provide public notice of order imbalances for securities, facilitate price discovery, and minimize short-term price dislocation, by allowing for the entry of offsetting orders or the cancellation of orders on the side of an imbalance.

An order imbalance may occur when the Exchange receives a sudden influx of orders for a particular security on the same side of the market within a short time interval, or when one or more large-size orders for a security are entered, and there is insufficient offsetting interest. When an imbalance exists that the Designated Market Maker ("DMM") determines would cause a significant price dislocation, the Policy provides that the DMM should widen the spread between the bid and offer—a process known as "gapping the quote." The use of a gap quote signals the existence of the imbalance to the market in order to attract contra-side liquidity and mitigate volatility.

The proposed Information Memo includes a summary of the options available to a DMM when publishing a gap quote. In this situation, a DMM may: (1) Trade out of the gap quote by executing contra side interest against the imbalance (allowing for any cancellations); (2) update the gap quote, in consultation with a senior-level Floor Official; or (3) request an order imbalance trading halt in the security at issue, in consultation with a senior-level Floor Official.

Under the proposal, the volume requirement for implementing a gap quote would be reduced from at least 10,000 shares to at least 5,000 shares, and the value requirement for implementing a gap quote would be reduced from $200,000 or more to $100,000 or more. If either requirement is met, the DMM may implement a gap quote if it determines the imbalance would cause a significant price dislocation. In addition, the Exchange has proposed to clarify the factors DMMs consider when setting the price of the gap quote. Finally, the Exchange has proposed to clarify certain aspects of the Policy and make other technical or non-substantive changes.

A. Reduced Minimum Size and Value Requirements

The Exchange has proposed to reduce the minimum size and value requirements for the use of a gap quote under the Policy to at least 5,000 shares or a market value of $100,000 or more. The Exchange believes that these lower thresholds better reflect current market conditions. In addition to reducing the quantitative requirements for implementing a gap quote, the Exchange has proposed to add language clarifying that, notwithstanding meeting the minimum size or value requirement, an imbalance must also be anticipated to cause a significant price dislocation in the stock at issue in order to justify a gap quote. The Exchange believes it is important to emphasize that whether a gap quote is appropriate depends on the characteristics of a security as much as on the Policy's minimum requirements.

B. Setting the Price of the Gap Quote

The current Information Memo instructs DMMs to set the price of a gap quote "at the price at which the DMM believes the stock would trade if no contra side interest developed or no cancellations occurred[.]" The Exchange has instead proposed that the DMM should publish the gap quote at the price where the DMM "reasonably anticipates" the stock would trade if no contra side interest developed or no cancellations occurred, which the Exchange believes helps clarify the guidance.

The Exchange has also proposed to clarify that the Policy still requires a DMM to take into account, "to the extent known," executable orders, e-Quotes and verbal interest in the Crowd (on the side of the market opposite the imbalance) at prices better than the price set by the DMM as the side of the gap quote opposite the imbalance when making his or her pricing determination. If the imbalance is known to be limited as to price, the DMM should not set the gap quote higher than that limit price.

The Exchange also has proposed to add a provision reminding the DMMs that, at the time they publish a gap quote, they should set the price of the gap quote such that it is likely to result in a trade of at least the minimum size of 5,000 shares or $100,000 in value, thus clearing all, or a substantial portion of, the imbalance.

C. Other Clarifications and Technical or Non-Substantive Changes

The Exchange has also proposed several additional changes. A complete list of these changes is set forth in the Notice.[5] Among these changes are the following:

- The Exchange has proposed to add language to the Information Memo clarifying the DMM's responsibilities when implementing a gap quote. DMMs must balance the need for accurate price discovery with the need to attract contra side interest and trade out of the gap quote as soon as possible. In doing so, the DMM should, in consultation with a senior-level Floor Official, consider updating the gap quote after initial publication if doing so is necessary to attract sufficient contra side interest.
- The Exchange has proposed to add language reminding members and member organizations that the gap quote procedures may not be initiated after

[1] 15 U.S.C. 78s(b)(1).

[2] 17 CFR 240.19b–4.

[3] *See* Securities Exchange Act Release No. 61048 (November 23, 2009), 74 FR 62863 ("Notice").

[4] For a full description of the proposal, including an overview of the history of the Policy and a detailed description of the current terms of the Policy, *see id.*

[5] *See id.* at 62865–66.

trading has closed. Instead, where there is a significant imbalance in a security at the close of trading, members and member organizations should use the procedures provided under Exchange Rule 123C(8) when attempting to mitigate the imbalance.

• The Information Memo currently includes an example illustrating implementation of a gap quote following an influx of orders from the Floor. The Exchange has proposed to add an example to the Information Memo which illustrates how the Policy works when the imbalance results in a liquidity replenishment point being reached.[6]

• Finally, because DMMs no longer act as agent for orders on the Display Book under the rules of NYSE's New Market Model,[7] the proposed Information Memo would clarify that a DMM who fails to follow the Policy would not be in violation the Order Display rule [8] and/or the Firm Quote rule [9] under Regulation NMS, but could be liable under NYSE Rules for a failure to maintain a fair and orderly market or a failure to observe high standards of commercial honor and just and equitable principles of trade.[10]

III. Discussion and Commission Findings

The Commission finds that the proposed rule change is consistent with the requirements of the Act and the rules and regulations thereunder applicable to a national securities exchange.[11] In particular, it is consistent with Section 6(b)(5) of the Act,[12] which requires, among other things, that the rules of a national securities exchange be designed to promote just and equitable principles of trade, to remove impediments to and perfect the mechanism of a free and open market and a national market system and, in general, to protect investors and the public interest. The proposed rule change also supports the principles of Section 11A(a)(1) [13] of the Act in that it seeks to ensure the economically efficient execution of securities transactions and fair competition among brokers and dealers and among exchange markets.

The Exchange stated in the proposal that it believes the current volume and value requirements are too high in light of current market conditions. Recent trends in market activity have driven down both average trade sizes and average stock prices. As a result, the current volume and value requirements are met less frequently than they once were, and there are fewer occasions on which a DMM may use gap quotes to facilitate price discovery and minimize short-term price dislocation. The Exchange stated in its proposal that, based on its analysis of historical market conditions, the proposal to lower the gap quote volume and value requirements will permit an increased use of gap quotes, which it believed would be appropriate for current market conditions. In addition, the Exchange did not believe that lowering the requirements would cause an increase in the use of gap quotes to such a degree that would negatively impact the quality of the Exchange's market. The revised volume and value requirements should provide greater transparency and efficiency and additional reductions in volatility, consistent with the purpose of the Policy.

The Commission believes that the remaining aspects of the proposed rule change set forth in the Notice are either technical or non-substantive in nature, or are clarifications of the existing gap quote policy, and therefore are consistent with the Act.

The Commission notes that the Exchange represented in the Notice that it has reasonable policies and procedures to surveil DMMs' use of gap quotes and to detect the potential misuse of gap quotes in violation of Exchange rules and Federal securities laws. Such surveillance should provide the Exchange with information that will be helpful in assessing the effects of an increased number of gap quotes on the Exchange's market.

In light of the foregoing, the Commission finds that the proposed rule change is consistent with the Act and the rules and regulations thereunder.

IV. Conclusion

It is therefore ordered, pursuant to Section 19(b)(2) of the Act,[14] that the proposed rule change (SR–NYSE–2009–112) be, and it hereby is, approved.

For the Commission, by the Division of Trading and Markets, pursuant to delegated authority.[15]

Florence E. Harmon,

Deputy Secretary.

[FR Doc. 2010–191 Filed 1–8–10; 8:45 am]

BILLING CODE 8011–01–P

[6] *See* NYSE Rule 1000(a)(iv).

[7] In October 2008, the Commission approved NYSE's proposal to eliminate specialists and introduce DMMs. *See* Securities Exchange Act Release No. 58845 (October 24, 2008), 73 FR 64379 (October 29, 2008) (SR–NYSE–2008–46).

[8] *See* 17 CFR 242.604.

[9] *See* 17 CFR 242.602.

[10] *See* NYSE Rules 104(a), 104(f) and 2010.

[11] In approving this proposed rule change, the Commission has considered the proposed rule's impact on efficiency, competition, and capital formation. *See* 15 U.S.C. 78c(f).

[12] 15 U.S.C. 78f(b)(5).

[13] 15 U.S.C. 78k–1(a)(1).

[14] 15 U.S.C. 78s(b)(2).

[15] 17 CFR 200.30–3(a)(12).

SECURITIES AND EXCHANGE COMMISSION

[Release No. 34–61276; File No. SR–NYSEAmex–2009–82]

Self-Regulatory Organizations; NYSE Amex LLC; Order Approving a Proposed Rule Change Rescinding NYSE Information Memoranda 04–27 and 07–66 and Issuing a New Information Memo Concerning the Exchange's Gap Quote Policy

January 4, 2010.

I. Introduction

On November 9, 2009, the NYSE Amex LLC ("NYSEAmex" or the "Exchange") filed with the Securities and Exchange Commission ("Commission"), pursuant to Section 19(b)(1) of the Securities Exchange Act of 1934 ("Act") [1] and Rule 19b–4 thereunder,[2] a proposed rule change to rescind NYSE Information Memoranda 04–27 and 07–66 and issue a new Information Memo that provides updated parameters for, and guidance on the application of, the Exchange's Gap Quote Policy (the "Policy"). In order to ensure an orderly transition to usage of the new parameters, the Exchange has proposed that these changes be made operative ten business days after the date of this order. The proposed rule change was published for comment in the **Federal Register** on December 1, 2009.[3] The Commission received no comment letters on the proposal. This order approves the proposed rule change.

II. Description of the Proposal [4]

The purpose of the Policy is to provide public notice of order imbalances for securities, facilitate price discovery, and minimize short-term price dislocation, by allowing for the entry of offsetting orders or the cancellation of orders on the side of an imbalance.

[1] 15 U.S.C. 78s(b)(1).

[2] 17 CFR 240.19b–4.

[3] *See* Securities Exchange Act Release No. 61049 (November 23, 2009), 74 FR 62851 ("Notice").

[4] For a full description of the proposal, including an overview of the history of the Policy and a detailed description of the current terms of the Policy, *see id.*

An order imbalance may occur when the Exchange receives a sudden influx of orders for a particular security on the same side of the market within a short time interval, or when one or more large-size orders for a security are entered, and there is insufficient offsetting interest. When an imbalance exists that the Designated Market Maker ("DMM") determines would cause a significant price dislocation, the Policy provides that the DMM should widen the spread between the bid and offer—a process known as "gapping the quote." The use of a gap quote signals the existence of the imbalance to the market in order to attract contra-side liquidity and mitigate volatility.

The proposed Information Memo includes a summary of the options available to a DMM when publishing a gap quote. In this situation, a DMM may: (1) Trade out of the gap quote by executing contra side interest against the imbalance (allowing for any cancellations); (2) update the gap quote, in consultation with a senior-level Floor Official; or (3) request an order imbalance trading halt in the security at issue, in consultation with a senior-level Floor Official.

Under the proposal, the volume requirement for implementing a gap quote would be reduced from at least 10,000 shares to at least 5,000 shares, and the value requirement for implementing a gap quote would be reduced from $200,000 or more to $100,000 or more. If either requirement is met, the DMM may implement a gap quote if it determines the imbalance would cause a significant price dislocation. In addition, the Exchange has proposed to clarify the factors DMMs consider when setting the price of the gap quote. Finally, the Exchange has proposed to clarify certain aspects of the Policy and make other technical or non-substantive changes.

A. Reduced Minimum Size and Value Requirements

The Exchange has proposed to reduce the minimum size and value requirements for the use of a gap quote under the Policy to at least 5,000 shares or a market value of $100,000 or more. The Exchange believes that these lower thresholds better reflect current market conditions. In addition to reducing the quantitative requirements for implementing a gap quote, the Exchange has proposed to add language clarifying that, notwithstanding meeting the minimum size or value requirement, an imbalance must also be anticipated to cause a significant price dislocation in the stock at issue in order to justify a gap quote. The Exchange believes it is important to emphasize that whether a gap quote is appropriate depends on the characteristics of a security as much as on the Policy's minimum requirements.

B. Setting the Price of the Gap Quote

The current Information Memo instructs DMMs to set the price of a gap quote "at the price at which the DMM believes the stock would trade if no contra side interest developed or no cancellations occurred[.]" The Exchange has instead proposed that the DMM should publish the gap quote at the price where the DMM "reasonably anticipates" the stock would trade if no contra side interest developed or no cancellations occurred, which the Exchange believes helps clarify the guidance.

The Exchange has also proposed to clarify that the Policy still requires a DMM to take into account, "to the extent known," executable orders, e-Quotes and verbal interest in the Crowd (on the side of the market opposite the imbalance) at prices better than the price set by the DMM as the side of the gap quote opposite the imbalance when making his or her pricing determination. If the imbalance is known to be limited as to price, the DMM should not set the gap quote higher than that limit price.

The Exchange also has proposed to add a provision reminding the DMMs that, at the time they publish a gap quote, they should set the price of the gap quote such that it is likely to result in a trade of at least the minimum size of 5,000 shares or $100,000 in value, thus clearing all, or a substantial portion of, the imbalance.

C. Other Clarifications and Technical or Non-Substantive Changes

The Exchange has also proposed several additional changes. A complete list of these changes is set forth in the Notice.[5] Among these changes are the following:

- The Exchange has proposed to add language to the Information Memo clarifying the DMM's responsibilities when implementing a gap quote. DMMs must balance the need for accurate price discovery with the need to attract contra side interest and trade out of the gap quote as soon as possible. In doing so, the DMM should, in consultation with a senior-level Floor Official, consider updating the gap quote after initial publication if doing so is necessary to attract sufficient contra side interest.
- The Exchange has proposed to add language reminding members and member organizations that the gap quote procedures may not be initiated after trading has closed. Instead, where there is a significant imbalance in a security at the close of trading, members and member organizations should use the procedures provided under NYSE Amex Equities Rule 123C(8) when attempting to mitigate the imbalance.
- The Information Memo currently includes an example illustrating implementation of a gap quote following an influx of orders from the Floor. The Exchange has proposed to add an example to the Information Memo which illustrates how the Policy works when the imbalance results in a liquidity replenishment point being reached.[6]
- Finally, because DMMs no longer act as agent for orders on the Display Book under the rules of the Exchange's New Market Model,[7] the proposed Information Memo would clarify that a DMM who fails to follow the Policy would not be in violation the Order Display rule[8] and/or the Firm Quote rule[9] under Regulation NMS, but could be liable under NYSE Amex Equities Rules for a failure to maintain a fair and orderly market or a failure to observe high standards of commercial honor and just and equitable principles of trade.[10]

III. Discussion and Commission Findings

The Commission finds that the proposed rule change is consistent with the requirements of the Act and the rules and regulations thereunder applicable to a national securities exchange.[11] In particular, it is consistent with Section 6(b)(5) of the Act,[12] which requires, among other things, that the rules of a national securities exchange be designed to promote just and equitable principles of trade, to remove impediments to and perfect the mechanism of a free and open market and a national market system and, in general, to protect investors and the public interest. The proposed rule

[5] *See id.* at 62853–54.

[6] *See* NYSE Amex Equities Rule 1000(a)(iv).

[7] In October 2008, the Commission approved The New York Stock Exchange's proposal to eliminate specialists and introduce DMMs. *See* Securities Exchange Act Release No. 58845 (October 24, 2008), 73 FR 64379 (October 29, 2008) (SR–NYSE–2008–46). NYSE Amex adopted NYSE's trading rules, including the rules regarding DMMs and the New Market Model, in November 2008. *See* Securities Exchange Act Release No. 59022 (November 26, 2008), 73 FR 73683 (December 3, 2008) (SR–NYSEALTR–2008–10).

[8] *See* 17 CFR 242.604.

[9] *See* 17 CFR 242.602.

[10] *See* NYSE Amex Equities Rules 104(a), 104(f) and 2010.

[11] In approving this proposed rule change, the Commission has considered the proposed rule's impact on efficiency, competition, and capital formation. *See* 15 U.S.C. 78c(f).

[12] 15 U.S.C. 78f(b)(5).

change also supports the principles of Section 11A(a)(1)[13] of the Act in that it seeks to ensure the economically efficient execution of securities transactions and fair competition among brokers and dealers and among exchange markets.

The Exchange stated in the proposal that it believes the current volume and value requirements are too high in light of current market conditions. Recent trends in market activity have driven down both average trade sizes and average stock prices. As a result, the current volume and value requirements are met less frequently than they once were, and there are fewer occasions on which a DMM may use gap quotes to facilitate price discovery and minimize short-term price dislocation. The Exchange stated in its proposal that, based on its analysis of historical market conditions, the proposal to lower the gap quote volume and value requirements will permit an increased use of gap quotes, which it believed would be appropriate for current market conditions. In addition, the Exchange did not believe that lowering the requirements would cause an increase in the use of gap quotes to such a degree that would negatively impact the quality of the Exchange's market. The revised volume and value requirements should provide greater transparency and efficiency and additional reductions in volatility, consistent with the purpose of the Policy.

The Commission believes that the remaining aspects of the proposed rule change set forth in the Notice are either technical or non-substantive in nature, or are clarifications of the existing gap quote policy, and therefore are consistent with the Act.

The Commission notes that the Exchange represented in the Notice that it has reasonable policies and procedures to surveil DMMs' use of gap quotes and to detect the potential misuse of gap quotes in violation of Exchange rules and Federal securities laws. Such surveillance should provide the Exchange with information that will be helpful in assessing the effects of an increased number of gap quotes on the Exchange's market.

In light of the foregoing, the Commission finds that the proposed rule change is consistent with the Act and the rules and regulations thereunder.

IV. Conclusion

It is therefore ordered, pursuant to Section 19(b)(2) of the Act,[14] that the proposed rule change (SR–NYSEAmex–2009–82) be, and it hereby is, approved.

For the Commission, by the Division of Trading and Markets, pursuant to delegated authority.[15]

Florence E. Harmon,

Deputy Secretary.

[FR Doc. 2010–192 Filed 1–8–10; 8:45 am]

BILLING CODE 8011–01–P

[13] 15 U.S.C. 78k–1(a)(1).

[14] 15 U.S.C. 78s(b)(2).

[15] 17 CFR 200.30–3(a)(12).

SECURITIES AND EXCHANGE COMMISSION

[Release No. 34–61279; File No. SR–ISE–2009–110]

Self-Regulatory Organizations; International Securities Exchange, LLC; Notice of Filing and Immediate Effectiveness of Proposed Rule Change Relating to Options on the Brazilian Real

January 4, 2010.

Pursuant to Section 19(b)(1) of the Securities Exchange Act of 1934 (the "Act"),[1] and Rule 19b–4 thereunder,[2] notice is hereby given that on December 22, 2009, the International Securities Exchange, LLC (the "Exchange" or the "ISE") filed with the Securities and Exchange Commission the proposed rule change as described in Items I, II, and III below, which items have been prepared by the Exchange. The Commission is publishing this notice to solicit comments on the proposed rule change from interested persons.

I. Self-Regulatory Organization's Statement of the Terms of Substance of the Proposed Rule Change

The ISE proposes to change the modifier for the Brazilian real.

II. Self-Regulatory Organization's Statement of the Purpose of, and Statutory Basis for, the Proposed Rule Change

In its filing with the Commission, the self-regulatory organization included statements concerning the purpose of, and basis for, the proposed rule change and discussed any comments it received on the proposed rule change. The text of these statements may be examined at the places specified in Item IV below. The self-regulatory organization has prepared summaries, set forth in sections A, B and C below, of the most significant aspects of such statements.

[1] 15 U.S.C. 78s(b)(1).

[2] 17 CFR 240.19b–4.

A. Self-Regulatory Organization's Statement of the Purpose of, and Statutory Basis for, the Proposed Rule Change

1. Purpose

Pursuant to Commission approval, ISE began trading options on foreign currency pairs on April 17, 2007.[3] The Brazilian real is one of the 19 underlying currencies that have been approved by the SEC for trading.[4] The purpose of this proposed rule change is to allow the Exchange to use a different modifier for calculating the underlying value of the Brazilian real than the one that was originally assigned. In the FX Options Filing, the Exchange had assigned modifiers of 1, 10 or 100 to calculate the underlying values for each of the 19 underlying currencies,[5] with the Brazilian real being assigned a modifier of 10 based on the exchange rate at that time. Since then, however, the U.S. dollar has declined considerably relative to the Brazilian real. As a result, the Exchange believes a modifier of 100 would be more appropriate. ISE does not currently list options on the Brazilian real but expects to do so shortly.

2. Statutory Basis

The Exchange believes the proposed rule change is consistent with the Securities Exchange Act of 1934 (the "Act") and the rules and regulations under the Act applicable to a national securities exchange and, in particular, the requirements of Section 6(b) of the Act.[6] Specifically, the Exchange believes the proposed rule change is consistent with Section 6(b)(5) of the Act's[7] requirements that the rules of a national securities exchange be designed to promote just and equitable principles of trade, to prevent fraudulent and manipulative acts and, in general, to protect investors and the public interest.

B. Self-Regulatory Organization's Statement on Burden on Competition

The proposed rule change does not impose any burden on competition that is not necessary or appropriate in furtherance of the purposes of the Act.

[3] *See* Securities Exchange Act Release No. 55575 (April 3, 2007), 72 FR 17963 (April 10, 2007) (SR–ISE–2006–59) (the "FX Options Filing").

[4] *Id.*

[5] *See* Exhibit 3 of the FX Options Filing. Modifiers used for creating underlying values are also posted on the Exchange's Web site.

[6] 15 U.S.C. 78f(b).

[7] 15 U.S.C. 78f(b)(5).

C. Self-Regulatory Organization's Statement on Comments on the Proposed Rule Change Received From Members, Participants or Others

The Exchange has not solicited, and does not intend to solicit, comments on this proposed rule change. The Exchange has not received any written comments from members or other interested parties.

III. Date of Effectiveness of the Proposed Rule Change and Timing for Commission Action

Because the foregoing proposed rule change does not significantly affect the protection of investors or the public interest, does not impose any significant burden on competition, and, by its terms, does not become operative for 30 days from the date on which it was filed, or such shorter time as the Commission may designate, it has become effective pursuant to Section 19(b)(3)(A) [8] of the Act and Rule 19b–4(f)(6) [9] thereunder. The Exchange provided the Commission with written notice of its intent to file the proposed rule change, along with a brief description of the proposed rule change, at least five business days prior to the date of filing the proposed rule change.

At any time within 60 days of the filing of the proposed rule change, the Commission may summarily abrogate such rule change if it appears to the Commission that such action is necessary or appropriate in the public interest, for the protection of investors, or otherwise in furtherance of the purposes of the Act.

IV. Solicitation of Comments

Interested persons are invited to submit written data, views, and arguments concerning the foregoing, including whether the proposed rule change is consistent with the Act. Comments may be submitted by any of the following methods:

Electronic Comments

- Use the Commission's Internet comment form *(http://www.sec.gov/rules/sro.shtml);* or
- Send an e-mail to *rule-comments@sec.gov.* Please include File No. SR–ISE–2009–110 on the subject line.

Paper Comments

- Send paper comments in triplicate to Elizabeth Murphy, Secretary, Securities and Exchange Commission, 100 F Street, NE., Washington, DC 20549–1090.

All submissions should refer to File Number SR–ISE–2009–110. This file number should be included on the subject line if e-mail is used. To help the Commission process and review your comments more efficiently, please use only one method. The Commission will post all comments on the Commission's Internet Web site *(http://www.sec.gov/rules/sro.shtml).* Copies of the submission, all subsequent amendments, all written statements with respect to the proposed rule change that are filed with the Commission, and all written communications relating to the proposed rule change between the Commission and any person, other than those that may be withheld from the public in accordance with the provisions of 5 U.S.C. 552, will be available for inspection and copying in the Commission's Public Reference Section, 100 F Street, NE., Washington, DC 20549, on official business days between the hours of 10 a.m. and 3 p.m. Copies of the filing will also be available for inspection and copying at the principal office of the Exchange. All comments received will be posted without change; the Commission does not edit personal identifying information from submissions. You should submit only information that you wish to make available publicly. All submissions should refer to File Number SR–ISE–2009–110 and should be submitted on or before February 1, 2010.

For the Commission, by the Division of Trading and Markets, pursuant to delegated authority.[10]

Florence E. Harmon,

Deputy Secretary.

[FR Doc. 2010–194 Filed 1–8–10; 8:45 am]

BILLING CODE 8011–01–P

[8] 15 U.S.C. 78s(b)(3)(A).

[9] 17 CFR 240.19b–4(f)(6).

[10] 17 CFR 200.30–3(a)(12).

SECURITIES AND EXCHANGE COMMISSION

[Release No. 34–61277; File No. SR–Phlx–2009–108]

Self-Regulatory Organizations; Notice of Filing and Immediate Effectiveness of a Proposed Rule Change by NASDAQ OMX PHLX, Inc. To Amend the $1 Strike Program To Allow Low-Strike LEAPS

January 4, 2010.

Pursuant to Section 19(b)(1) of the Securities Exchange Act of 1934 ("Act") [1] and Rule 19b–4 thereunder,[2] notice is hereby given that on December 18, 2009, NASDAQ OMX PHLX, Inc. ("Phlx" or "Exchange") filed with the Securities and Exchange Commission ("SEC" or "Commission") the proposed rule change as described in Items I and II below, which Items have been prepared by the Exchange. The Commission is publishing this notice to solicit comments on the proposed rule change from interested persons.

I. Self-Regulatory Organization's Statement of the Terms of Substance of the Proposed Rule Change

The Exchange is filing with the Commission a proposal to amend its Rule 1012 (Series of Options Open for Trading) to expand the Exchange's $1 Strike Price Program ("Program" or "$1 Strike Program") [3] to allow listing long-term option series ("LEAPS") [4] in $1 strike price intervals up to $5 in up to 200 option classes in individual stocks.

The text of the proposed rule change is available on the Exchange's Web site at *http://nasdaqomxphlx.cchwallstreet.com/NASDAQOMXPHLX/Filings/,* at the principal office of the Exchange, and at the Commission's Public Reference Room.

II. Self-Regulatory Organization's Statement of the Purpose of, and Statutory Basis for, the Proposed Rule Change

In its filing with the Commission, the Exchange included statements concerning the purpose of and basis for the proposed rule change and discussed any comments it received on the proposed rule change. The text of these statements may be examined at the places specified in Item IV below. The

[1] 15 U.S.C. 78s(b)(1).

[2] 17 CFR 240.19b–4.

[3] The $1 Strike Program was initially approved on June 11, 2003, and thereafter extended several times until June 5, 2008. *See* Securities Exchange Act Release Nos. 48013 (June 11, 2003), 68 FR 35933 (June 17, 2003) (SR–Phlx–2002–55) (notice of filing and order approving); 49801 (June 3, 2004), 69 FR 32652 (June 10, 2004) (SR–Phlx–2004–38) (notice of filing and immediate effectiveness); 51768 (May 31, 2005), 70 FR 33250 (June 7, 2005) (SR–Phlx–2005–35) (notice of filing and immediate effectiveness); 53938 (June 5, 2006), 71 FR 34178 (June 13, 2006) (SR–Phlx–2006–36) (notice of filing and immediate effectiveness); and 55666 (April 25, 2007), 72 FR 23879 (May 1, 2007) (SR–Phlx–2007–29) (notice of filing and immediate effectiveness). The program was subsequently made permanent and expanded. *See* Securities Exchange Act Release Nos. 57111 (January 8, 2008), 73 FR 2297 (January 14, 2008) (SR–Phlx–2008–01) (notice of filing and immediate effectiveness); and 59590 (March 17, 2009), 74 FR 12412 (March 24, 2009) (SR–Phlx–2009–21) (notice of filing and immediate effectiveness).

[4] Long-Term Equity Anticipation Securities (LEAPS) are long-term options that generally have up to thirty-nine months from the time they are listed until expiration. Commentary .03 to Rule 1012. Long-term FLEX options and index options are considered separately in Rules 1079(a)(6) and 1101A(b)(iii), respectively.

Exchange has prepared summaries, set forth in sections A, B, and C below, of the most significant aspects of such statements.

A. Self-Regulatory Organization's Statement of the Purpose of, and Statutory Basis for, the Proposed Rule Change

1. Purpose

This proposed rule change is based on a filing previously submitted by Chicago Board Options Exchange, Incorporated ("CBOE") that was recently approved by the Commission.[5]

The purpose of the proposal is to expand the $1 Strike Program in a limited fashion to allow Phlx to list new series in $1 strike price intervals up to $5 in LEAPS in up to 200 option classes on individual stocks.

Currently, under the $1 Strike Program, the Exchange may not list LEAPS at $1 strike price intervals for any class selected for the Program. The Exchange also is restricted from listing any series that would result in strike prices being $0.50 apart, unless the series are part of the $.50 Strike Program.[6]

Phlx believes that its proposal to allow limited listing of LEAPS in the Program is appropriate and will allow investors to establish option positions that are better tailored to meet their investment objectives, vis-à-vis credit risk, using deep out-of-the-money, long-term put options. These types of options are viewed as a viable, liquid alternative to over the counter-traded ("OTC") credit default swaps ("CDS"), because such options do not possess the negative characteristics associated with CDS, namely, lack of transparency, insufficient collateral requirements, and inefficient trade processing.

The Exchange notes that its proposal is limited in scope, as $1 strikes in LEAPS may only be listed up to $5 and in only up to 200 option classes. As is currently the case in the $1 Strike Program, the Exchange would not list series with $1.00 intervals within $0.50 of an existing $2.50 strike price in the same series.[7] As a result, the Exchange does not believe that this proposal will cause a significant increase in quote traffic.

Moreover, as the Commission is aware, the Exchange has adopted various quote mitigation strategies in an effort to lessen the growth rate of quotations. When it expanded the $1 Strike Price Program several months ago the Exchange included a delisting policy that would be applicable with regard to this proposed expansion; the Exchange has likewise established a number of other delisting policies.[8] The Exchange and other options exchanges amended the Options Listing Procedures Plan ("OLPP") in 2008 to impose a minimum volume threshold of 1,000 contracts national average daily volume ("ADV") per underlying class to qualify for an additional year of LEAP series.[9] Most recently, the Exchange, along with the other options exchanges, amended the OLPP to adopt objective, exercise price range limitations applicable to equity option classes, options on Exchange Traded Funds ("ETFs") and options on trust issued receipts ("TIRs") (the "range limitation strategy").[10] The Exchange has filed a rule change proposal to codify the range limitation strategy in its own rules.[11] The Exchange believes that these price range limitations, in conjunction with the delisting policies in place at the Exchange,[12] will have a meaningful quote mitigation impact.

The margin requirements set forth in Rules 721 through 723 and the position and exercise requirements set forth in Rules 1001 and 1002, respectively, will continue to apply to these new series, and no changes are being proposed to those requirements by this rule change.

With regard to the impact on system capacity, the Exchange has analyzed its capacity and represents that it and the Options Price Reporting Authority ("OPRA") have the necessary systems capacity to handle the additional traffic that may be associated with the listing and trading of LEAPS in the $1 Strike Program as proposed by this filing.

2. Statutory Basis

The Exchange believes that its proposal is consistent with Section 6(b) of the Act [13] in general, and furthers the objectives of Section 6(b)(5) of the Act [14] in particular, in that it is designed to prevent fraudulent and manipulative acts and practices, to promote just and equitable principles of trade, to foster cooperation and coordination with persons engaged in facilitating transactions in securities, and to remove impediments to and perfect the mechanisms of a free and open market and a national market system. The Exchange believes that the ability to list and trade LEAPS at $1 strike price intervals will benefit investors by giving them more flexibility to more closely tailor their investment and hedging decisions.

B. Self-Regulatory Organization's Statement on Burden on Competition

The Exchange does not believe that the proposed rule change will impose any burden on competition not necessary or appropriate in furtherance of the purposes of the Act.

[5] *See* Securities Exchange Act Release No. 60978 (November 10, 2009), 74 FR 59296 (November 17, 2009) (SR–CBOE–2009–068) (order approving proposed rule change to allow listing LEAPS in $1 Strike Program).

[6] Regarding the $0.50 Strike Program, *see* Commentary .05(a)(ii) to Rule 1012 and Securities Exchange Act Release No. 60694 (September 18, 2009), 74 FR 49048 (September 25, 2009) (SR–Phlx–2009–65) (notice of filing and order approving). The $.50 Strike Program establishes strike price intervals of $0.50 for options on stocks trading at or below $3.00.

[7] However, strike prices of $2 and $3 are permitted within $0.50 of a $2.50 strike price for classes also selected for the $0.50 Strike Program. *See* proposed Commentary .05(a)(i)(C) to Rule 1012, which is similar in this respect to the current Commentary .05(a)(i)(B).

[8] For the $1 Strike Program delisting policy, *see* Securities Exchange Act Release No. 59590 (March 17, 2009), 74 FR 12412 (March 24, 2009) (SR–Phlx–2009–21) (notice of filing and immediate effectiveness). The $1 Strike Program delisting policy includes a provision stating that the Exchange may grant member requests and add strikes and/or maintain strikes in series of options classes traded pursuant to the Program that are eligible for delisting. For other delisting policies proposed and implemented by the Exchange, *see* Securities Exchange Act Release Nos. 60249 (July 6, 2009), 74 FR 33506 (July 13, 2009) (SR–Phlx–2009–50) (notice of filing and immediate effectiveness regarding Quarterly Options Series program); 60156 (June 22, 2009), 74 FR 31077 (June 29, 2009, 2009) (SR–Phlx–2009–46) (notice of filing and immediate effectiveness regarding options on reduced value NASDAQ–100 index); 60840 (October 20, 2009), 74 FR 55593 (October 28, 2009) (SR–Phlx–2009–77) (order approving listing certain options at $1 strike price intervals below $200); and Commentary.11 to rule 1010 (low ADV delisting policy) and Securities Exchange Act Release No. 56881 (December 3, 2007), 72 FR 69276 (December 7, 2007) (SR–Phlx–2007–72) (notice of filing and immediate effectiveness regarding delisting securities underlying low ADV options).

[9] *See* Securities Exchange Act Release No. 58630 (September 24, 2008), 73 FR 57166 (October 1, 2008) (File No. 4–443) (order approving Amendment No. 2 to OLPP).

[10] *See* Securities Exchange Act Release No. 60531 (August 19, 2009), 74 FR 43173 (August 26, 2009) (File No 4–443) (order approving Amendment No. 3 to OLPP). Phlx's proposal to list $1 strikes in LEAPs to $5 would not be subject to the exercise price range limitations contained in new paragraph (3)(g)(ii) of the OLPP.

[11] *See* SR–Phlx–2009–103 (unpublished).

[12] *See, for example,* Securities Exchange Act Release Nos. 60249 (July 6, 2009), 74 FR 33506 (July 13, 2009) (SR–Phlx–2009–50) (notice of filing and immediate effectiveness regarding Quarterly Options Series program); 60156 (June 22, 2009), 74 FR 31077 (June 29, 2009, 2009) (SR–Phlx–2009–46) (notice of filing and immediate effectiveness regarding options on reduced value NASDAQ–100 index); 60840 (October 20, 2009), 74 FR 55593 (October 28, 2009) (SR–Phlx–2009–77) (order approving listing certain options at $1 strike price intervals below $200); and Commentary.11 to rule 1010 (low ADV delisting policy) and Securities Exchange Act Release No. 56881 (December 3, 2007), 72 FR 69276 (December 7, 2007) (SR–Phlx–2007–72) (notice of filing and immediate effectiveness regarding delisting securities underlying low ADV options).

[13] 15 U.S.C. 78f(b).

[14] 15 U.S.C. 78f(b)(5).

C. Self-Regulatory Organization's Statement on Comments on the Proposed Rule Change Received From Members, Participants, or Others

No written comments were either solicited or received.

III. Date of Effectiveness of the Proposed Rule Change and Timing for Commission Action

Because the foregoing proposed rule change does not: (i) Significantly affect the protection of investors or the public interest; (ii) impose any significant burden on competition; or (iii) become operative for 30 days after the date of the filing, or such shorter time as the Commission may designate, if consistent with the protection of investors and the public interest, it has become effective pursuant to Section 19(b)(3)(A) of the Act [15] and Rule 19b–4(f)(6) thereunder.[16]

The Exchange has requested that the Commission waive the 30-day operative delay. The Commission hereby grants that request.[17] The Commission believes that waiver of the operative delay is consistent with the protection of investors and the public interest because it recently approved a proposal from CBOE which is nearly identical to the current proposal and on which no comments were received.[18] Therefore, the proposal is operative upon filing.

At any time within 60 days of the filing of the proposed rule change, the Commission may summarily abrogate such rule change if it appears to the Commission that such action is necessary or appropriate in the public interest, for the protection of investors, or otherwise in furtherance of the purposes of the Act.

IV. Solicitation of Comments

Interested persons are invited to submit written data, views, and arguments concerning the foregoing, including whether the proposed rule change is consistent with the Act. Comments may be submitted by any of the following methods:

Electronic Comments

- Use the Commission's Internet comment form *(http://www.sec.gov/rules/sro.shtml);* or
- Send an e-mail to *rule-comments@sec.gov.* Please include File No. SR–Phlx–2009–108 on the subject line.

Paper Comments

- Send paper comments in triplicate to Elizabeth M. Murphy, Secretary, Securities and Exchange Commission, 100 F Street, NE., Washington, DC 20549–1090.

All submissions should refer to File No. SR–Phlx–2009–108. This file number should be included on the subject line if e-mail is used. To help the Commission process and review your comments more efficiently, please use only one method. The Commission will post all comments on the Commission's Internet Web site *(http://www.sec.gov/rules/sro.shtml).* Copies of the submission, all subsequent amendments, all written statements with respect to the proposed rule change that are filed with the Commission, and all written communications relating to the proposed rule change between the Commission and any person, other than those that may be withheld from the public in accordance with the provisions of 5 U.S.C. 552, will be available for inspection and copying in the Commission's Public Reference Room, 100 F Street, NE., Washington, DC 20549, on official business days between the hours of 10 a.m. and 3 p.m. Copies of such filing also will be available for inspection and copying at the principal office of Phlx. All comments received will be posted without change; the Commission does not edit personal identifying information from submissions. You should submit only information that you wish to make available publicly. All submissions should refer to File No. SR–Phlx–2009–108 and should be submitted on or before February 1, 2010.

For the Commission, by the Division of Trading and Markets, pursuant to delegated authority.[19]

Florence E. Harmon,

Deputy Secretary.

[FR Doc. 2010–193 Filed 1–8–10; 8:45 am]

BILLING CODE 8011–01–P

[15] 15 U.S.C. 78s(b)(3)(A).

[16] 17 CFR 240.19b–4(f)(6). In addition, Rule 19b–4(f)(6) requires a self-regulatory organization to give the Commission written notice of its intent to file the proposed rule change, along with a brief description and text of the proposed rule change, at least five business days prior to the date of filing of the proposed rule change, or such shorter time as designated by the Commission. The Exchange has satisfied this requirement.

[17] For purposes only of waiving the 30-day operative delay, the Commission has considered the proposed rule's impact on efficiency, competition, and capital formation. *See* 15 U.S.C. 78c(f).

[18] *See* Exchange Act Release No. 60978 (November 10, 2009), 74 FR 59296 (November 17, 2009) (approving SR–CBOE–2009–68).

[19] 17 CFR 200.30–3(a)(12).

SECURITIES AND EXCHANGE COMMISSION

[Release No. 34–61270; File No. SR–CBOE–2009–099]

Self-Regulatory Organizations; Chicago Board Options Exchange, Incorporated; Notice of Filing and Immediate Effectiveness of Proposed Rule Change To Permit Concurrent Listing of $2.50 and $1 Strikes on MNX Options

December 31, 2009.

Pursuant to Section 19(b)(1) of the Securities Exchange Act of 1934 (the "Act"),[1] and Rule 19b–4 thereunder,[2] notice is hereby given that on December 23, 2009, the Chicago Board Options Exchange, Incorporated ("Exchange" or "CBOE") filed with the Securities and Exchange Commission (the "Commission") the proposed rule change as described in Items I, II and III below, which Items have been prepared by the Exchange. The Exchange has designated this proposal as one constituting a stated policy, practice, or interpretation with respect to the meaning, administration, or enforcement of an existing rule under Section 19(b)(3)(A)(i) of the Act, and Rule 19b–4(f)(1) thereunder, which renders the proposal effective upon filing with the Commission.[3] The Commission is publishing this notice to solicit comments on the proposed rule change from interested persons.

I. Self-Regulatory Organization's Statement of the Terms of Substance of the Proposed Rule Change

CBOE proposes to clarify that the Exchange may concurrently list $2.50 and $1 strikes on Mini-Nasdaq-100 Index ("MNX") options, and that certain listing parameters only apply to $1 strikes on MNX options. The text of the rule proposal is available on the Exchange's Web site *(http://www.cboe.org/legal)*, at the Exchange's Office of the Secretary, and at the Commission's Public Reference Room.

II. Self-Regulatory Organization's Statement of the Purpose of, and Statutory Basis for, the Proposed Rule Change

In its filing with the Commission, the self-regulatory organization included statements concerning the purpose of and basis for the proposed rule change and discussed any comments it received on the proposed rule change. The text of those statements may be examined at

[1] 15 U.S.C. 78s(b)(1).

[2] 17 CFR 240.19b–4.

[3] 17 CFR 240.19b–4(f)(1).

the places specified in Item IV below. The Exchange has prepared summaries, set forth in sections A, B, and C below, of the most significant parts of such statements.

A. Self-Regulatory Organization's Statement of the Purpose of, and Statutory Basis for, the Proposed Rule Change

1. Purpose

The purpose of the proposed rule change is to clarify that the Exchange may concurrently list $2.50 and $1 strikes on Mini-Nasdaq-100 Index ("MNX") options, and that certain listing parameters only apply to $1 strikes on MNX options. The Exchange believes that the availability of $2.50 and $1 strike price intervals in MNX option series will provide investors with greater flexibility by allowing them to establish positions that are better tailored to meet their investment objectives.

Since November 2008, the Exchange has had the ability to list $1 strikes on MNX options.[4] In connection with the proposal to permit $1 strikes for MNX options, the Exchange established parameters subject to which $1 strikes may be added and delisted. For example, the number of initial series that the Exchange may add is limited to 11 series.[5] Also, the total number of additional series that may be added for $1 strikes is sixty (60) per expiration month for each series in MNX options.[6]

Similar parameters do not exist with regard to the listing of $2.50 strikes, and the Exchange now seeks to clarify that the parameters adopted with the proposal to permit $1 strikes for MNX options do not apply to the listing of $2.50 strikes for MNX options.[7] In addition, the Exchange is proposing to codify a bracketing provision that prohibits the Exchange from listing strike prices with $1 intervals within $0.50 of an existing strike price in the same series. This bracketing provision is identical to an existing provision in effect for the $1 Strike Program, which permits the concurrent listing of $2.50 and $1 strikes.

2. Statutory Basis

The Exchange believes this rule proposal is consistent with the Act and the rules and regulations under the Act applicable to a national securities exchange and, in particular, the requirements of Section 6(b) of the Act.[8] Specifically, the Exchange believes that the proposed rule change is consistent with the Section 6(b)(5) Act[9] requirements that the rules of an exchange be designed to promote just and equitable principles of trade, to prevent fraudulent and manipulative acts and, in general, to protect investors and the public interest by allowing the Exchange to list MNX options at $2.50 and $1 strike price intervals.

B. Self-Regulatory Organization's Statement on Burden on Competition

CBOE does not believe that the proposed rule change will impose any burden on competition not necessary or appropriate in furtherance of the purposes of the Act.

C. Self-Regulatory Organization's Statement on Comments on the Proposed Rule Change Received From Members, Participants, or Others

No written comments were solicited or received with respect to the proposed rule change.

III. Date of Effectiveness of the Proposed Rule Change and Timing for Commission Action

The foregoing proposed rule change will take effect upon filing with the Commission pursuant to Section 19(b)(3)(A)(i) of the Act[10] and Rule 19b–4(f)(1) thereunder,[11] because it constitutes a stated policy, practice, or interpretation with respect to the meaning, administration, or enforcement of an existing rule.

At any time within 60 days of the filing of the proposed rule change, the Commission may summarily abrogate such rule change if it appears to the Commission that such action is necessary or appropriate in the public interest, for the protection of investors, or otherwise in furtherance of the purposes of the Act.

IV. Solicitation of Comments

Interested persons are invited to submit written data, views, and arguments concerning the foregoing, including whether the proposed rule change is consistent with the Act. Comments may be submitted by any of the following methods:

Electronic Comments

- Use the Commission's Internet comment form *(http://www.sec.gov/rules/sro.shtml);* or
- Send an e-mail to *rule-comments@sec.gov.* Please include File Number SR–CBOE–2009–099 on the subject line.

Paper Comments

- Send paper comments in triplicate to Elizabeth M. Murphy, Secretary, Securities and Exchange Commission, 100 F Street, NE., Washington, DC 20549–1090.

All submissions should refer to File Number SR–CBOE–2009–099. This file number should be included on the subject line if e-mail is used. To help the Commission process and review your comments more efficiently, please use only one method. The Commission will post all comments on the Commission's Internet Web site *(http://www.sec.gov/rules/sro.shtml).* Copies of the submission, all subsequent amendments, all written statements with respect to the proposed rule change that are filed with the Commission, and all written communications relating to the proposed rule change between the Commission and any person, other than those that may be withheld from the public in accordance with the provisions of 5 U.S.C. 552, will be available for inspection and copying in the Commission's Public Reference Room, 100 F Street, NE., Washington, DC 20549, on official business days between the hours of 10 a.m. and 3 p.m. Copies of the filing also will be available for inspection and copying at the principal office of the Exchange. All comments received will be posted without change; the Commission does not edit personal identifying information from submissions. You should submit only information that you wish to make available publicly. All submissions should refer to File Number SR–CBOE–2009–099 and should be submitted on or before February 1, 2010.

For the Commission, by the Division of Trading and Markets, pursuant to delegated authority.[12]

Florence E. Harmon,

Deputy Secretary.

[FR Doc. 2010–189 Filed 1–8–10; 8:45 am]

BILLING CODE 8011–01–P

[4] *See* Securities Exchange Act Release No. 58924 (November 10, 2008), 73 FR 68464 (November 18, 2008) (SR–CBOE–2008–96) (order approving rule change to permit $1 strikes for MNX options).

[5] *See* Interpretation and Policy .01(j)(i).

[6] *See* Interpretation and Policy .01(j)(ii) to Rule 24.9.

[7] *See* Interpretation and Policy .01(a) to Rule 24.9.

[8] 15 U.S.C. 78f(b).

[9] 15 U.S.C. 78f(b)(5).

[10] 15 U.S.C. 78s(b)(3)(A)(i).

[11] 17 CFR 240.19b–4(f)(1).

[12] 17 CFR 200.30–3(a)(12).

SOCIAL SECURITY ADMINISTRATION

[Docket No. SSA–2010–0001]

Future Systems Technology Advisory Panel Meeting

AGENCY: Social Security Administration (SSA).

ACTION: Notice of sixth Panel meeting.

DATES: February 3, 2010, 10:30 a.m.–5 p.m. and February 4, 2010, 8:30 a.m.–12 p.m.

Location: The Latham Hotel Georgetown.

ADDRESSES: 3000 M Street, Northwest, Washington, District of Columbia 20007.

SUPPLEMENTARY INFORMATION:

Type of meeting: The meeting is open to the public.

Purpose: The Panel, under the Federal Advisory Committee Act of 1972, as amended, (hereinafter referred to as "the FACA") shall report to and provide the Commissioner of Social Security independent advice and recommendations on the future of systems technology and electronic services at the agency five to ten years into the future. The Panel will recommend a road map to aid SSA in determining what future systems technologies may be developed to assist in carrying out its statutory mission. Advice and recommendations can relate to SSA's systems in the area of internet application, customer service, or any other arena that would improve SSA's ability to serve the American people.

Agenda: The Panel will meet on Wednesday, February 3, 2010, from 10:30 a.m. until 5 p.m. and Thursday, February 4, 2010, from 8:30 a.m. to 12 p.m. The agenda will be available on the Internet at *http://www.ssa.gov/fstap/index.htm* or available by e-mail or fax on request, one week prior to the starting date.

During the sixth meeting, the Panel may have experts address items of interest and other relevant topics to the Panel. This additional information will further the Panel's deliberations and the effort of the Panel subcommittees.

Public comments will be heard on Wednesday, February 3, 2010, from 4:30 p.m. until 5 p.m. Persons interested in providing comments in person should contact the Panel staff as outlined below to schedule a time slot. Members of the public must schedule a time slot in order to comment. In the event public comments do not take the entire scheduled time period, the Panel may use that time to deliberate or conduct other Panel business. Each person providing public comment will be acknowledged by the Chair in the order in which they are scheduled to provide comments and is limited to a maximum five-minute, verbal presentation. In addition to or in lieu of public comments provided in person, written comments may be provided to the panel for their review and consideration. Comments in written or oral form are for informational purposes only for the Panel. Public comments will not be specifically addressed or receive a written response by the Panel.

For hearing impaired persons and those in need of sign language services please contact the Panel staff as outlined below at least 10 business days prior to the meeting so that timely arrangements can be made to provide this service.

Contact Information: Records are kept of all proceedings and will be available for public inspection by appointment at the Panel office. Anyone requiring information regarding the Panel should contact the staff by:

Mail addressed to SSA, Future Systems Technology Advisory Panel, Room 800, Altmeyer Building, 6401 Security Boulevard, Baltimore, MD 21235–0001; Telephone at 410–965–9951; Fax at 410–965–0201; or E-mail to *FSTAP@ssa.gov.*

Dated: January 4, 2010.

Dianne L. Rose,

Designated Federal Officer, Future Systems Technology Advisory Panel.

[FR Doc. 2010–244 Filed 1–8–10; 8:45 am]

BILLING CODE 4191–02–P

SOCIAL SECURITY ADMINISTRATION

[Docket No. SSA–2009–0088]

Rate of Payment for Medical Records Received Through Health Information Technology (IT) Necessary To Make Disability Determinations

AGENCY: Social Security Administration.

ACTION: Notice of a uniform national rate of Federal payment for medical records received through health IT.

SUMMARY: We have set $15 as the reasonable reimbursement to non-Federal medical providers for their costs in supplying medical records through health IT in response to a request. We will pay the uniform national rate to a medical provider that satisfies a medical records request through health IT. We are establishing this uniform national rate under our authority in sections 205(a), 223(d)(5)(A) and 1631(e) of the Social Security Act (Act).

DATES: We are establishing the reasonable rate for medical records received through health IT in response to our requests on or after the date of publication of this notice. We will periodically review this rate and publish updates in the **Federal Register**.

FOR FURTHER INFORMATION CONTACT: Cheryl Elksnis, Office of Disability Programs, Social Security Administration, 6401 Security Boulevard, Baltimore, MD 21235–6401, 410–966–0497, for information about this notice. For information on eligibility or filing for benefits, call our national toll-free number, 1–800–772–1213 or TTY 1–800–325–0778, or visit our Internet site, Social Security Online, at *http://www.socialsecurity.gov.*

SUPPLEMENTARY INFORMATION: We are experiencing a significant increase in the number of initial claims for disability insurance benefits and Supplemental Security Income (SSI) payments on the basis of disability, and we expect this trend to continue. The increasing volume of claims, coupled with the backlog of disability cases in the hearings process, underscores our need to process cases more efficiently by using advanced technologies.

Applicants for disability insurance benefits and SSI payments on the basis of disability must provide medical evidence to support their claims for benefits. We assist these applicants in obtaining medical records. We use these medical records to make disability determinations for more than 2.6 million people who apply each year for benefits. We rely on medical providers such as doctors, hospitals, clinics, and others in the healthcare field to respond to our requests for medical records in a timely manner.

We are now in a position to use health IT to transform the disability process. Health IT is an electronic system that provides for a secure exchange of data between health care consumers and providers. We intend to use health IT in developing medical evidence and requesting, receiving, and managing medical information. By using health IT, we will be able to request and receive medical information within minutes, rather than the days or months it may take to receive medical evidence by traditional methods. With the advent of health IT, we will be able to replace a largely paper-based, labor intensive, manual process with system-to-system data exchange transactions.

We have set $15 as the reasonable reimbursement to non-Federal medical providers for their costs in supplying medical records through health IT in response to a request. The $15 rate is based on our average payment for medical records obtained through non-health IT processes. As increasing numbers of medical providers

incorporate health IT and the market for health IT records exchanges develops, we anticipate that we will develop more detailed information about the reasonable costs for obtaining medical records through health IT. Consequently, we will periodically review the uniform national rate for reimbursing all non-federal medical providers for the reasonable costs of supplying health IT medical records.

When we revise the uniform national rate, we will publish another notice in the **Federal Register**.

Dated: January 4, 2010.

Michael J. Astrue,

Commissioner of Social Security.

[FR Doc. 2010–225 Filed 1–8–10; 8:45 am]

BILLING CODE 4191–02–P

DEPARTMENT OF TRANSPORTATION

Surface Transportation Board

[STB Finance Docket No. 34658]

Alaska Railroad Corporation—Construction and Operation Exemption—Rail Line Between North Pole and Delta Junction, AK

By petition filed on July 6, 2007, Alaska Railroad Corporation (ARRC), a Class III rail carrier incorporated in, and owned by, the State of Alaska, seeks an exemption under 49 U.S.C. 10502 from the prior approval requirements of 49 U.S.C. 10901 for authority to construct and operate approximately 80 miles of new main line track, referred to as the Northern Rail Extension (NRE), in the State of Alaska. The proposed NRE would extend southeasterly from Mile 20 on ARRC's existing Eielson Branch near the community of North Pole (located just south of Fairbanks) to the southern side of the community of Delta Junction.

In a decision served on October 4, 2007, the Board instituted a proceeding under 49 U.S.C. 10502(b). The Board's Section of Environmental Analysis (SEA) has conducted an environmental review of the proposed construction and alternatives. A detailed Draft Environmental Impact Statement (EIS) prepared by SEA together with eight cooperating agencies [1] was issued for public review and comment on February 2, 2009. SEA then prepared a Final EIS that was issued on September 18, 2009. The Final EIS considered all the comments received on the Draft EIS, reflects SEA's further independent analysis, and sets forth SEA's preferred rail alignments and final recommended environmental mitigation measures.

After considering the entire record, including both the transportation aspects of the petition and the potential environmental issues, we granted the requested construction and operation exemption in a decision served on January 6, 2010, permitting ARRC to build any of the preferred rail alignments set out in the decision, subject to compliance with the environmental mitigation measures listed in Appendix 1 of the decision. Vice Chairman Mulvey dissented with a separate expression. Petitions to reopen must be filed by February 5, 2010.

Board decisions and notices are available on our Web site at *www.stb.dot.gov*.

Decided: January 5, 2010.

By the Board, Chairman Elliott, Vice Chairman Mulvey, and Commissioner Nottingham. Vice Chairman Mulvey dissented with a separate expression.

Kulunie L. Cannon,

Clearance Clerk.

[FR Doc. 2010–217 Filed 1–8–10; 8:45 am]

BILLING CODE 4915–01–P

[1] U.S. Department of Defense Alaskan Command, Bureau of Land Management, Federal Transit Administration, Federal Railroad Administration, U.S. Air Force 354th Fighter Wing Command from Eielson Air Force Base, U.S. Army Corps of Engineers, U.S. Coast Guard, and State of Alaska Department of Natural Resources.

DEPARTMENT OF TRANSPORTATION

Federal Aviation Administration

Receipt of Noise Compatibility Program Update and Request for Review for Modesto City-County Airport, Modesto, CA

AGENCY: Federal Aviation Administration, DOT.

ACTION: Notice, correction.

SUMMARY: The Federal Aviation Administration (FAA) published a notice in the **Federal Register** on December 18, 2009. (74 FR 67305). This action corrects an error in a date in that document. The notice announced that the FAA is reviewing a proposed noise compatibility program update that was submitted for Modesto City-County Airport under the provisions of 49 U.S.C. 47501 *et seq.* (the Aviation Safety and Noise Abatement Act) and 14 CFR Part 150 by City of Modesto.

FOR FURTHER INFORMATION CONTACT: Camille Garibaldi, Telephone number: (650) 876–2778, extension 613.

Correction

In Notice document (**Federal Register** Doc. E9–30186) published on December 18, 2009 (74 FR 67305) make the following correction:

On page 67305 in the second column, in the fourth line of the third paragraph under the heading **SUPPLEMENTARY INFORMATION**; the date December 6, 2009, is corrected to read, December 9, 2009.

Issued in Hawthorne, California on December 29, 2009.

Mark A. McClardy,

Manager, Airports Division, AWP–600, Western-Pacific Region.

[FR Doc. 2010–114 Filed 1–8–10; 8:45 am]

BILLING CODE 4910–13–M

DEPARTMENT OF TRANSPORTATION

National Highway Traffic Safety Administration

Petition for Exemption From the Vehicle Theft Prevention Standard; Hyundia-Kia America Technical Center, Inc.

AGENCY: National Highway Traffic Safety Administration (NHTSA), Department of Transportation (DOT).

ACTION: Grant of petition for exemption.

SUMMARY: This document grants in full the petition of Hyundai-Kia Motors Corporation (HATCI) in accordance with § 543.9(c)(2) of 49 CFR part 543, *Exemption from the Theft Prevention Standard,* for the Kia Amanti vehicle line beginning with model year (MY) 2009. This petition is granted because the agency has determined that the antitheft device to be placed on the line as standard equipment is likely to be as effective in reducing and deterring motor vehicle theft as compliance with the parts-marking requirements of the Theft Prevention Standard. HATCI requested confidential treatment for its information and attachments submitted in support of its petition. In a letter dated January 30, 2008, the agency denied HATCI's request for confidential treatment. Subsequently, HATCI requested reconsideration of the determination. In a letter dated September 25, 2008, the agency granted the petitioner's request for reconsideration of confidential treatment of the indicated areas of its petition.

DATES: The exemption granted by this notice is effective beginning with model year (MY) 2009.

FOR FURTHER INFORMATION CONTACT: Ms. Deborah Mazyck, International Policy, Fuel Economy and Consumer Programs, NHTSA, 1200 New Jersey Avenue, SE., Washington, DC 20590. Ms. Mazyck's telephone number is (202) 366–0846. Her fax number is (202) 493–2290.

SUPPLEMENTAL INFORMATION: In a petition dated October 22, 2007, Hyundai-Kia America Technical Center, Inc., on behalf of Kia Motors Corporation (Kia) requested an exemption from the parts-marking requirements of the Theft Prevention Standard (49 CFR part 541) for the Kia Amanti vehicle line beginning with MY 2009. The petition requested an exemption from parts-marking pursuant to 49 CFR part 543, *Exemption from Vehicle Theft Prevention Standard,* based on the installation of an antitheft device as standard equipment for an entire vehicle line.

Under § 543.5(a), a manufacturer may petition NHTSA to grant an exemption for one of its vehicle lines per year. HATCI's submission is considered a complete petition as required by 49 CFR 543.7, in that it meets the general requirements contained in § 543.5 and the specific content requirements of § 543.6.

HATCI's petition provided a detailed description and diagram of the identity, design, and location of the components of the antitheft device for the Amanti vehicle line. Although HATCI has requested confidential treatment of specific details of the system's operation, design, effectiveness and durability, NHTSA is, for the purposes of this petition, disclosing the following general information. HATCI will install its passive antitheft device as standard equipment on its Amanti vehicle line beginning with MY 2009. The antitheft device to be installed on the MY 2009 Kia is a transponder-based immobilizer system. Features of the antitheft device will include a passive immobilizer consisting of an EMS (engine control unit), SMARTRA 3 (immobilizer unit), an antenna coil and transponder. Additionally, the Kia Amanti will have a standard alarm system which will monitor all the doors and the hood of the vehicle. The audible and visual alarms are activated when an unauthorized person attempts to enter or move the vehicle by unauthorized means.

HATCI stated that the device is automatically activated by removing the key from the ignition switch and locking the vehicle door. In order to arm the device, the key must be removed from the ignition switch, all of the doors and hood must be closed and the driver's door must be locked with the ignition key or all doors must be locked with the keyless entry. When the device is armed, the visual (flashing hazard lamps) and audible (horn sound) alarm system will be triggered if unauthorized entry is attempted through the doors, trunk or the hood. The device is disarmed when the driver's door is unlocked with the transponder key or keyless entry.

HATCI stated that the antitheft device has been installed as standard equipment on the Kia Azera which was previously approved for exemption from Part 541. There is currently no available theft rate data for Kia vehicle lines that have been installed with similar devices. However, HATCI submitted data on the effectiveness of various antitheft devices to support its belief that its device will be at least effective as comparable devices installed on other vehicle lines previously granted exemptions by the agency. HATCI further stated that it believes that the General Motors, Ford and Isuzu devices contain components that are functionally and operationally similar to its device. HATCI also stated that the theft data from the National Crime Information Center (NCIC) show a clear reduction in vehicle thefts after the introduction of the GM and Ford devices. Therefore, HATCI believes that its device will be at least as effective as those devices that have been installed on lines previously granted exemptions by the agency. HATCI provided theft rate data for the Chevrolet Camaro and Pontiac Firebird vehicle lines showing a substantial reduction in theft rates comparing the lines between pre- and post-introduction of the Pass-Key device. HATCI also provided "percent reduction" data for theft rates between pre- and post-production years for the Ford Taurus and Mustang, and Oldsmobile Toronado and Riviera vehicle lines normalized to the three-year average of the Camaro and Firebird pre-introduction data. HATCI stated that the data shows a dramatic reduction of theft rates due to the introduction of devices substantially similar to the Kia immobilizer device. Specifically, the Taurus, Mustang, Riviera and Toronado vehicle lines showed a 63, 70, 80 and 58 percent theft rate reduction respectively between pre- and post-introduction of immobilizer devices as standard equipment on these vehicle lines.

In addressing the specific content requirements of 543.6, HATCI provided information on the reliability and durability of its proposed device. In support of the reliability and durability of the device, HATCI stated that the engine control unit of the device carries out a check of the ignition key by special encryption algorithm with the immobilizer unit and the transponder. The engine can only be started if the results of the ignition key check and algorithm are equal. Additionally, Kia conducted tests based on its own specified standards for reliability and durability. HATCI provided a detailed list of the tests conducted, and believes that the device is reliable and durable since the device complied with its specified requirements for each test.

Based on the confidential material submitted by HATCI, the agency believes that the antitheft device for the Amanti vehicle line is likely to be as effective in reducing and deterring motor vehicle theft as compliance with the parts-marking requirements of the Theft Prevention Standard (49 CFR part 541). Based on the information HATCI provided about the device, the agency concludes that the device will provide the five types of performance listed in § 543.6(a)(3): promoting activation; attracting attention to the efforts of unauthorized persons to enter or operate a vehicle by means other than a key; preventing defeat or circumvention of the device by unauthorized persons; preventing operation of the vehicle by unauthorized entrants; and ensuring the reliability and durability of the device.

As required by 49 U.S.C. 33106 and 49 CFR part 543.6(a)(4) and (5), the agency finds that HATCI has provided adequate reasons for its belief that the antitheft device will reduce and deter theft.

For the foregoing reasons, the agency hereby grants in full HATCI's petition for exemption for the Amanti vehicle line from the parts-marking requirements of 49 CFR part 541. The agency notes that 49 CFR part 541, Appendix A–1, identifies those lines that are exempted from the Theft Prevention Standard for a given model year. 49 CFR part 543.7(f) contains publication requirements incident to the disposition of all Part 543 petitions. Advanced listing, including the release of future product nameplates, the beginning model year for which the petition is granted and a general description of the antitheft device is necessary in order to notify law enforcement agencies of new vehicle lines exempted from the parts-marking requirements of the Theft Prevention Standard.

If Kia decides not to use the exemption for this line, it must formally notify the agency. If such a decision is made, the line must be fully marked according to the requirements under 49 CFR parts 541.5 and 541.6 (marking of major component parts and replacement parts).

NHTSA notes that if Kia wishes in the future to modify the device on which this exemption is based, the company may have to submit a petition to modify the exemption. Part 543.7(d) states that a Part 543 exemption applies only to

vehicles that belong to a line exempted under this part and equipped with the anti-theft device on which the line's exemption is based. Further, Part 543.9(c)(2) provides for the submission of petitions "to modify an exemption to permit the use of an antitheft device similar to but differing from the one specified in that exemption."

The agency wishes to minimize the administrative burden that Part 543.9(c)(2) could place on exempted vehicle manufacturers and itself. The agency did not intend in drafting Part 543 to require the submission of a modification petition for every change to the components or design of an antitheft device. The significance of many such changes could be *de minimis.* Therefore, NHTSA suggests that if the manufacturer contemplates making any changes, the effects of which might be characterized as *de minimis*, it should consult the agency before preparing and submitting a petition to modify.

Authority: 49 U.S.C. 33106; delegation of authority at 49 CFR 1.50.

Issued on: January 5, 2010.

Stephen R. Kratzke,

Associate Administrator for Rulemaking.

[FR Doc. 2010–236 Filed 1–8–10; 8:45 am]

BILLING CODE 4910–59–P

DEPARTMENT OF TRANSPORTATION

Federal Motor Carrier Safety Administration

[FMCSA Docket No. FMCSA–2009–0289]

Qualification of Drivers; Exemption Applications; Diabetes

AGENCY: Federal Motor Carrier Safety Administration (FMCSA), DOT

ACTION: Notice of final disposition.

SUMMARY: FMCSA announces its decision to exempt forty-one individuals from its rule prohibiting persons with insulin-treated diabetes mellitus (ITDM) from operating commercial motor vehicles (CMVs) in interstate commerce. The exemptions will enable these individuals to operate CMVs in interstate commerce.

DATES: The exemptions are effective January 11, 2010. The exemptions expire on January 11, 2012.

FOR FURTHER INFORMATION CONTACT: Dr. Mary D. Gunnels, Director, Medical Programs, (202) 366–4001, *fmcsamedical@dot.gov,* FMCSA, Room W64–224, Department of Transportation, 1200 New Jersey Avenue, SE., Washington, DC 20590–0001. Office hours are from 8:30 a.m. to 5 p.m., Monday through Friday, except Federal holidays.

SUPPLEMENTARY INFORMATION:

Electronic Access

You may see all the comments online through the Federal Document Management System (FDMS) at: *http://www.regulations.gov.*

Docket: For access to the docket to read background documents or comments, go to *http://www.regulations.gov* and/or Room W12–140 on the ground level of the West Building, 1200 New Jersey Avenue, SE., Washington, DC, between 9 a.m. and 5 p.m., Monday through Friday, except Federal holidays.

Privacy Act: Anyone may search the electronic form of all comments received into any of DOT's dockets by the name of the individual submitting the comment (or of the person signing the comment, if submitted on behalf of an association, business, labor union, or other entity). You may review DOT's complete Privacy Act Statement in the **Federal Register** (65 FR 19477, Apr. 11, 2000). This statement is also available at *http://Docketinfo.dot.gov.*

Background

On October 29, 2009, FMCSA published a notice of receipt of Federal diabetes exemption applications from forty-one individuals and requested comments from the public (74 FR 55890). The public comment period closed on November 30, 2009, and no comments were received.

FMCSA has evaluated the eligibility of the forty-one applicants and determined that granting the exemptions to these individuals would achieve a level of safety equivalent to, or greater than, the level that would be achieved by complying with the current regulation 49 CFR 391.41(b)(3).

Diabetes Mellitus and Driving Experience of the Applicants

The Agency established the current standard for diabetes in 1970 because several risk studies indicated that diabetic drivers had a higher rate of crash involvement than the general population. The diabetes rule provides that "A person is physically qualified to drive a commercial motor vehicle if that person has no established medical history or clinical diagnosis of diabetes mellitus currently requiring insulin for control" (49 CFR 391.41(b)(3)).

FMCSA established its diabetes exemption program, based on the Agency's July 2000 study entitled "A Report to Congress on the Feasibility of a Program to Qualify Individuals with Insulin-Treated Diabetes Mellitus to Operate in Interstate Commerce as Directed by the Transportation Act for the 21st Century." The report concluded that a safe and practicable protocol to allow some drivers with ITDM to operate CMVs is feasible. The September 3, 2003 (68 FR 52441) **Federal Register** Notice in conjunction with the November 8, 2005 (70 FR 67777) **Federal Register** Notice provides the current protocol for allowing such drivers to operate CMVs in interstate commerce.

These forty-one applicants have had ITDM over a range of 1 to 41 years. These applicants report no hypoglycemic reaction that resulted in loss of consciousness or seizure, that required the assistance of another person, or resulted in impaired cognitive function without warning symptoms in the past 5 years (with one year of stability following any such episode). In each case, an endocrinologist has verified that the driver has demonstrated willingness to properly monitor and manage his/her diabetes, received education related to diabetes management, and is on a stable insulin regimen. These drivers report no other disqualifying conditions, including diabetes-related complications. Each meets the vision standard at 49 CFR 391.41(b)(10).

The qualifications and medical condition of each applicant were stated and discussed in detail in the October 29, 2009, **Federal Register** Notice; therefore, they will not be repeated in this notice.

Basis for Exemption Determination

Under 49 U.S.C. 31136(e) and 31315, FMCSA may grant an exemption from the diabetes standard in 49 CFR 391.41(b)(3) if the exemption is likely to achieve an equivalent or greater level of safety than would be achieved without the exemption. The exemption allows the applicants to operate CMVs in interstate commerce.

To evaluate the effect of these exemptions on safety, FMCSA considered medical reports about the applicants' ITDM and vision, and reviewed the treating endocrinologists' medical opinion related to the ability of the driver to safely operate a CMV while using insulin.

Consequently, FMCSA finds that in each case exempting these applicants from the diabetes standard in 49 CFR 391.41(b)(3) is likely to achieve a level of safety equal to that existing without the exemption.

Conditions and Requirements

The terms and conditions of the exemption will be provided to the

applicants in the exemption document and they include the following: (1) That each individual submit a quarterly monitoring checklist completed by the treating endocrinologist as well as an annual checklist with a comprehensive medical evaluation; (2) that each individual reports within 2 business days of occurrence, all episodes of severe hypoglycemia, significant complications, or inability to manage diabetes; also, any involvement in an accident or any other adverse event in a CMV or personal vehicle, whether or not it is related to an episode of hypoglycemia; (3) that each individual provide a copy of the ophthalmologist's or optometrist's report to the medical examiner at the time of the annual medical examination; and (4) that each individual provide a copy of the annual medical certification to the employer for retention in the driver's qualification file, or keep a copy in his/her driver's qualification file if he/she is self-employed. The driver must also have a copy of the certification when driving, for presentation to a duly authorized Federal, State, or local enforcement official.

Discussion of Comments

FMCSA received no comments in this proceeding.

Conclusion

Based upon its evaluation of the forty-one exemption applications, FMCSA exempts, Richard A. Becker, David M. Bridges, Eric M. Butz, Gerald F. Crowley, Paul J. Dematas, Scott J. Denham, Larry E. Dickerson, Lance W. Essex, Ferral F. Ford, David E. Ginter, William H. Goebel, Joseph L. Gray, III., Ryan R. Harris, Carroll J. Hartsell, James S. Heinen, Rita A. Hopman, Shelton P. Huber, Keith M. Huels, Daniel R. Jackson, Ricky D. Jameson, Michael A. Johnson, Justin D. Jones, Curtis W. Keelin, Jr., Andrew S. Knight, Patrick J. Krueger, Tammy L.F. Manuel, Francisco J. Martinez, Alan J. Maza, Allan C. Moore, Andrew W. Myer, Robert R. Napier, Chad A. Nelson, David W. Olson, Mark Otto, Mark E. Pascoe, Terry L. Riddell, Rodney R. Rupe, Darrell S. Seibold, Roger L. Summerfield, Daren D. White, and Jimmy P. Wright from the ITDM standard in 49 CFR 391.41(b)(3), subject to the conditions listed under "Conditions and Requirements" above.

In accordance with 49 U.S.C. 31136(e) and 31315 each exemption will be valid for two years unless revoked earlier by FMCSA. The exemption will be revoked if: (1) The person fails to comply with the terms and conditions of the exemption; (2) the exemption has resulted in a lower level of safety than was maintained before it was granted; or (3) continuation of the exemption would not be consistent with the goals and objectives of 49 U.S.C. 31136(e) and 31315. If the exemption is still effective at the end of the 2-year period, the person may apply to FMCSA for a renewal under procedures in effect at that time.

Issued on December 22, 2009.

Larry W. Minor,

Associate Administrator for Policy and Program Development.

[FR Doc. 2010–197 Filed 1–8–10; 8:45 am]

BILLING CODE 4910–EX–P

DEPARTMENT OF TRANSPORTATION

Federal Motor Carrier Safety Administration

[Docket No. FMCSA–2001–10578; FMCSA–2005–22194; FMCSA–2005–22727; FMCSA–2007–29019]

Qualification of Drivers; Exemption Applications; Vision

AGENCY: Federal Motor Carrier Safety Administration (FMCSA), DOT.

ACTION: Notice of renewal of exemptions; request for comments.

SUMMARY: FMCSA announces its decision to renew the exemptions from the vision requirement in the Federal Motor Carrier Safety Regulations for 6 individuals. FMCSA has statutory authority to exempt individuals from the vision requirement if the exemptions granted will not compromise safety. The Agency has concluded that granting these exemption renewals will provide a level of safety that is equivalent to, or greater than, the level of safety maintained without the exemptions for these commercial motor vehicle (CMV) drivers.

DATES: This decision is effective February 9, 2010. Comments must be received on or before February 10, 2010.

ADDRESSES: You may submit comments bearing the Federal Docket Management System (FDMS) Docket ID FMCSA–2001–10578; FMCSA–2005–22194; FMCSA–2005–22727; FMCSA–2007–29019, using any of the following methods.

- *Federal eRulemaking Portal:* Go to *http://www.regulations.gov.* Follow the on-line instructions for submitting comments.
- *Mail:* Docket Management Facility; U.S. Department of Transportation, 1200 New Jersey Avenue, SE., West Building Ground Floor, Room W12–140, Washington, DC 20590–0001.
- *Hand Delivery or Courier:* West Building Ground Floor, Room W12–140, 1200 New Jersey Avenue, SE., Washington, DC, between 9 a.m. and 5 p.m., Monday through Friday, except Federal Holidays.
- *Fax:* 1–202–493–2251.

Each submission must include the Agency name and the docket number for this Notice. Note that DOT posts all comments received without change to *http://www.regulations.gov,* including any personal information included in a comment. *Please see* the Privacy Act heading below.

Docket: For access to the docket to read background documents or comments, go to *http://www.regulations.gov* at any time or Room W12–140 on the ground level of the West Building, 1200 New Jersey Avenue, SE., Washington, DC, between 9 a.m. and 5 p.m., Monday through Friday, except Federal holidays. The FDMS is available 24 hours each day, 365 days each year. If you want acknowledgment that we received your comments, please include a self-addressed, stamped envelope or postcard or print the acknowledgement page that appears after submitting comments on-line.

Privacy Act: Anyone may search the electronic form of all comments received into any of our dockets by the name of the individual submitting the comment (or of the person signing the comment, if submitted on behalf of an association, business, labor union, etc.). You may review the DOT's complete Privacy Act Statement in the **Federal Register** published on April 11, 2000 (65 FR 19476). This information is also available at *http://www.regulations.gov.*

FOR FURTHER INFORMATION CONTACT: Dr. Mary D. Gunnels, Director, Medical Programs, (202) 366–4001, *fmcsamedical@dot.gov*, FMCSA, Department of Transportation, 1200 New Jersey Avenue, SE., Room W64–224, Washington, DC 20590–0001. Office hours are from 8:30 a.m. to 5 p.m. Monday through Friday, except Federal holidays.

SUPPLEMENTARY INFORMATION:

Background

Under 49 U.S.C. 31136(e) and 31315, FMCSA may renew an exemption from the vision requirements in 49 CFR 391.41(b)(10), which applies to drivers of CMVs in interstate commerce, for a two-year period if it finds "such exemption would likely achieve a level of safety that is equivalent to, or greater than, the level that would be achieved absent such exemption." The procedures for requesting an exemption (including renewals) are set out in 49 CFR part 381.

Exemption Decision

This notice addresses 6 individuals who have requested renewal of their exemptions in accordance with FMCSA procedures. FMCSA has evaluated these 6 applications for renewal on their merits and decided to extend each exemption for a renewable two-year period. They are:

James S. Ayers
Vernon J. Dohrn
Mark A. Massengill
Douglas J. Mauton
Dennis L. Maxcy
Dean B. Ponte

These exemptions are extended subject to the following conditions: (1) That each individual has a physical examination every year (a) by an ophthalmologist or optometrist who attests that the vision in the better eye continues to meet the standard in 49 CFR 391.41(b)(10), and (b) by a medical examiner who attests that the individual is otherwise physically qualified under 49 CFR 391.41; (2) that each individual provides a copy of the ophthalmologist's or optometrist's report to the medical examiner at the time of the annual medical examination; and (3) that each individual provides a copy of the annual medical certification to the employer for retention in the driver's qualification file and retain a copy of the certification on his/her person while driving for presentation to a duly authorized Federal, State, or local enforcement official. Each exemption will be valid for two years unless rescinded earlier by FMCSA. The exemption will be rescinded if: (1) The person fails to comply with the terms and conditions of the exemption; (2) the exemption has resulted in a lower level of safety than was maintained before it was granted; or (3) continuation of the exemption would not be consistent with the goals and objectives of 49 U.S.C. 31136(e) and 31315.

Basis for Renewing Exemptions

Under 49 U.S.C. 31315(b)(1), an exemption may be granted for no longer than two years from its approval date and may be renewed upon application for additional two year periods. In accordance with 49 U.S.C. 31136(e) and 31315, each of the 6 applicants has satisfied the entry conditions for obtaining an exemption from the vision requirements (66 FR 53826; 66 FR 66966; 68 FR 69434; 71 FR 6825; 73 FR 6246; 70 FR 57353; 70 FR 72689; 70 FR 71884; 71 FR 4632; 72 FR 58362; 72 FR 67344). Each of these 6 applicants has requested renewal of the exemption and has submitted evidence showing that the vision in the better eye continues to meet the standard specified at 49 CFR 391.41(b)(10) and that the vision impairment is stable. In addition, a review of each record of safety while driving with the respective vision deficiencies over the past two years indicates each applicant continues to meet the vision exemption standards. These factors provide an adequate basis for predicting each driver's ability to continue to drive safely in interstate commerce. Therefore, FMCSA concludes that extending the exemption for each renewal applicant for a period of two years is likely to achieve a level of safety equal to that existing without the exemption.

Request for Comments

FMCSA will review comments received at any time concerning a particular driver's safety record and determine if the continuation of the exemption is consistent with the requirements at 49 U.S.C. 31136(e) and 31315. However, FMCSA requests that interested parties with specific data concerning the safety records of these drivers submit comments by February 10, 2010.

FMCSA believes that the requirements for a renewal of an exemption under 49 U.S.C. 31136(e) and 31315 can be satisfied by initially granting the renewal and then requesting and evaluating, if needed, subsequent comments submitted by interested parties. As indicated above, the Agency previously published notices of final disposition announcing its decision to exempt these 6 individuals from the vision requirement in 49 CFR 391.41(b)(10). The final decision to grant an exemption to each of these individuals was based on the merits of each case and only after careful consideration of the comments received to its notices of applications. The notices of applications stated in detail the qualifications, experience, and medical condition of each applicant for an exemption from the vision requirements. That information is available by consulting the above cited **Federal Register** publications.

Interested parties or organizations possessing information that would otherwise show that any, or all of these drivers, are not currently achieving the statutory level of safety should immediately notify FMCSA. The Agency will evaluate any adverse evidence submitted and, if safety is being compromised or if continuation of the exemption would not be consistent with the goals and objectives of 49 U.S.C. 31136(e) and 31315, FMCSA will take immediate steps to revoke the exemption of a driver.

Issued on: December 22, 2009.

Larry W. Minor,

Associate Administrator for Policy and Program Development.

[FR Doc. 2010–203 Filed 1–8–10; 8:45 am]

BILLING CODE 4910–EX–P

DEPARTMENT OF TRANSPORTATION

Federal Motor Carrier Safety Administration

[Docket No. FMCSA–2000–7918; FMCSA–2001–10578; FMCSA–2005–21711; FMCSA–2005–22727; FMCSA–2007–27897]

Qualification of Drivers; Exemption Applications; Vision

AGENCY: Federal Motor Carrier Safety Administration (FMCSA), DOT.

ACTION: Notice of renewal of exemptions; request for comments.

SUMMARY: FMCSA announces its decision to renew the exemptions from the vision requirement in the Federal Motor Carrier Safety Regulations for 13 individuals. FMCSA has statutory authority to exempt individuals from the vision requirement if the exemptions granted will not compromise safety. The Agency has concluded that granting these exemption renewals will provide a level of safety that is equivalent to, or greater than, the level of safety maintained without the exemptions for these commercial motor vehicle (CMV) drivers.

DATES: This decision is effective January 27, 2010. Comments must be received on or before February 10, 2010.

ADDRESSES: You may submit comments bearing the Federal Docket Management System (FDMS) Docket ID FMCSA–2000–7918; FMCSA–2001–10578; FMCSA–2005–21711; FMCSA–2005–22727; FMCSA–2007–27897, using any of the following methods:

- *Federal eRulemaking Portal:* Go to *http://www.regulations.gov.* Follow the on-line instructions for submitting comments.
- *Mail:* Docket Management Facility; U.S. Department of Transportation, 1200 New Jersey Avenue, SE., West Building Ground Floor, Room W12–140, Washington, DC 20590–0001.
- *Hand Delivery or Courier:* West Building Ground Floor, Room W12–140, 1200 New Jersey Avenue, SE., Washington, DC, between 9 a.m. and 5 p.m., Monday through Friday, except Federal Holidays.
- *Fax:* 1–202–493–2251.

Each submission must include the Agency name and the docket number for this Notice. Note that DOT posts all

comments received without change to *http://www.regulations.gov,* including any personal information included in a comment. Please see the Privacy Act heading below.

Docket: For access to the docket to read background documents or comments, go to *http://www.regulations.gov* at any time or Room W12–140 on the ground level of the West Building, 1200 New Jersey Avenue, SE., Washington, DC, between 9 a.m. and 5 p.m., Monday through Friday, except Federal holidays. The FDMS is available 24 hours each day, 365 days each year. If you want acknowledgment that we received your comments, please include a self-addressed, stamped envelope or postcard or print the acknowledgement page that appears after submitting comments on-line.

Privacy Act: Anyone may search the electronic form of all comments received into any of our dockets by the name of the individual submitting the comment (or of the person signing the comment, if submitted on behalf of an association, business, labor union, etc.). You may review the DOT's complete Privacy Act Statement in the **Federal Register** published on April 11, 2000 (65 FR 19476). This information is also available at *http://www.regulations.gov.*

FOR FURTHER INFORMATION CONTACT: Dr. Mary D. Gunnels, Director, Medical Programs, (202) 366–4001, *fmcsamedical@dot.gov,* FMCSA, Department of Transportation, 1200 New Jersey Avenue, SE., Room W64–224, Washington, DC 20590–0001. Office hours are from 8:30 a.m. to 5 p.m. Monday through Friday, except Federal holidays.

SUPPLEMENTARY INFORMATION:

Background

Under 49 U.S.C. 31136(e) and 31315, FMCSA may renew an exemption from the vision requirements in 49 CFR 391.41(b)(10), which applies to drivers of CMVs in interstate commerce, for a two-year period if it finds "such exemption would likely achieve a level of safety that is equivalent to, or greater than, the level that would be achieved absent such exemption." The procedures for requesting an exemption (including renewals) are set out in 49 CFR part 381.

Exemption Decision

This notice addresses 13 individuals who have requested renewal of their exemptions in accordance with FMCSA procedures. FMCSA has evaluated these 13 applications for renewal on their merits and decided to extend each exemption for a renewable two-year period. They are:

Donald J. Bierwirth, Jr., Ronald D. Boeve, Arthur L. Bousema, Matthew W. Daggs, Donald R. Date, Jr., John E. Kimmet, Jr., Robert C. Leathers, Jason L. Light, Robert Mollicone, Kenneth R. Murphy, Robert A. Sherry, Stephen G. Sniffin, John R. Snyder.

These exemptions are extended subject to the following conditions: (1) That each individual has a physical examination every year (a) by an ophthalmologist or optometrist who attests that the vision in the better eye continues to meet the standard in 49 CFR 391.41(b)(10), and (b) by a medical examiner who attests that the individual is otherwise physically qualified under 49 CFR 391.41; (2) that each individual provides a copy of the ophthalmologist's or optometrist's report to the medical examiner at the time of the annual medical examination; and (3) that each individual provides a copy of the annual medical certification to the employer for retention in the driver's qualification file and retain a copy of the certification on his/her person while driving for presentation to a duly authorized Federal, State, or local enforcement official. Each exemption will be valid for two years unless rescinded earlier by FMCSA. The exemption will be rescinded if: (1) The person fails to comply with the terms and conditions of the exemption; (2) the exemption has resulted in a lower level of safety than was maintained before it was granted; or (3) continuation of the exemption would not be consistent with the goals and objectives of 49 U.S.C. 31136(e) and 31315.

Basis for Renewing Exemptions

Under 49 U.S.C. 31315(b)(1), an exemption may be granted for no longer than two years from its approval date and may be renewed upon application for additional two year periods. In accordance with 49 U.S.C. 31136(e) and 31315, each of the 13 applicants has satisfied the entry conditions for obtaining an exemption from the vision requirements (65 FR 66286; 66 FR 13825; 68 FR 10300; 70 FR 41811; 72 FR 52422; 66 FR 53826; 66 FR 66966; 68 FR 69434; 71 FR 646; 72 FR 71995; 70 FR 74102; 73 FR 5259; 70 FR 48797; 70 FR 61493; 70 FR 71884; 71 FR 4632; 72 FR 39879; 72 FR 52419). Each of these 13 applicants has requested renewal of the exemption and has submitted evidence showing that the vision in the better eye continues to meet the standard specified at 49 CFR 391.41(b)(10) and that the vision impairment is stable. In addition, a review of each record of safety while driving with the respective vision deficiencies over the past two years indicates each applicant continues to meet the vision exemption standards. These factors provide an adequate basis for predicting each driver's ability to continue to drive safely in interstate commerce. Therefore, FMCSA concludes that extending the exemption for each renewal applicant for a period of two years is likely to achieve a level of safety equal to that existing without the exemption.

Request for Comments

FMCSA will review comments received at any time concerning a particular driver's safety record and determine if the continuation of the exemption is consistent with the requirements at 49 U.S.C. 31136(e) and 31315. However, FMCSA requests that interested parties with specific data concerning the safety records of these drivers submit comments by February 10, 2010.

FMCSA believes that the requirements for a renewal of an exemption under 49 U.S.C. 31136(e) and 31315 can be satisfied by initially granting the renewal and then requesting and evaluating, if needed, subsequent comments submitted by interested parties. As indicated above, the Agency previously published notices of final disposition announcing its decision to exempt these 13 individuals from the vision requirement in 49 CFR 391.41(b)(10). The final decision to grant an exemption to each of these individuals was based on the merits of each case and only after careful consideration of the comments received to its notices of applications. The notices of applications stated in detail the qualifications, experience, and medical condition of each applicant for an exemption from the vision requirements. That information is available by consulting the above cited **Federal Register** publications.

Interested parties or organizations possessing information that would otherwise show that any, or all of these drivers, are not currently achieving the statutory level of safety should immediately notify FMCSA.

The Agency will evaluate any adverse evidence submitted and, if safety is being compromised or if continuation of the exemption would not be consistent with the goals and objectives of 49 U.S.C. 31136(e) and 31315, FMCSA will take immediate steps to revoke the exemption of a driver.

Issued on: December 22, 2009.

Larry W. Minor,

Associate Administrator for Policy and Program Development.

[FR Doc. 2010–199 Filed 1–8–10; 8:45 am]

BILLING CODE 4910–EX–P

DEPARTMENT OF TRANSPORTATION

Federal Motor Carrier Safety Administration

[Docket No. FMCSA–1999–5578; FMCSA–2005–21711; FMCSA–2007–27897; FMCSA–2007–28695; FMCSA–2007–29019]

Qualification of Drivers; Exemption Renewals; Vision

AGENCY: Federal Motor Carrier Safety Administration (FMCSA), DOT.

ACTION: Notice of final disposition.

SUMMARY: FMCSA previously announced its decision to renew the exemptions from the vision requirement in the Federal Motor Carrier Safety Regulations for 23 individuals. FMCSA has statutory authority to exempt individuals from the vision requirement if the exemptions granted will not compromise safety. The Agency has concluded that granting these exemptions will provide a level of safety that will be equivalent to, or greater than, the level of safety maintained without the exemptions for these commercial motor vehicle (CMV) drivers.

FOR FURTHER INFORMATION CONTACT: Dr. Mary D. Gunnels, Director, Medical Programs, (202) 366–4001, *fmcsamedical@dot.gov*, FMCSA, Department of Transportation, 1200 New Jersey Avenue, SE., Room W64–224, Washington, DC 20590–0001. Office hours are from 8:30 a.m. to 5 p.m. Monday through Friday, except Federal holidays.

SUPPLEMENTARY INFORMATION:

Electronic Access

You may see all the comments online through the Federal Document Management System (FDMS) at *http://www.regulations.gov.*

Background

Under 49 U.S.C. 31136(e) and 31315, FMCSA may grant an exemption for a 2-year period if it finds "such exemption would likely achieve a level of safety that is equivalent to, or greater than, the level that would be achieved absent such exemption." The statute also allows the Agency to renew exemptions at the end of the 2-year period. The comment period ended on December 7, 2009 (74 FR 57553).

Discussion of Comments

FMCSA received no comments in this proceeding.

Conclusion

The Agency has not received any adverse evidence on any of these drivers that indicates that safety is being compromised. Based upon its evaluation of the 23 renewal applications, FMCSA renews the Federal vision exemptions for Robert W. Bequeaith, William R. Braun, Lloyd K. Brown, Kecia D. Clark-Welch, Tommy R. Crouse, Ben W. Davis, Charles A. DeKnikker, Sr., Earl M. Frederick, Loren H. Geiken, John N. Guilford, John E. Halcomb, Rayford R. Harper, Michael A. Hershberger, Patrick J. Hogan, Todd A. McBrain, Richard K. Mell, Amilton T. Monteiro, David G. Oakley, John S. Olsen, Robert G. Owens, Nathan D. Peterson, Thomas J. Prusik and Glen W. Sterling.

In accordance with 49 U.S.C. 31136(e) and 31315, each renewal exemption will be valid for 2 years unless revoked earlier by FMCSA. The exemption will be revoked if: (1) The person fails to comply with the terms and conditions of the exemption; (2) the exemption has resulted in a lower level of safety than was maintained before it was granted; or (3) continuation of the exemption would not be consistent with the goals and objectives of 49 U.S.C. 31136 and 31315.

Issued on: December 22, 2009.

Larry W. Minor,

Associate Administrator for Policy and Program Development.

[FR Doc. 2010–201 Filed 1–8–10; 8:45 am]

BILLING CODE 4910–EX–P

DEPARTMENT OF TRANSPORTATION

Federal Motor Carrier Safety Administration

[Docket No. FMCSA–1998–4334; FMCSA–1999–5578; FMCSA–2000–7363; FMCSA–2001–9561; FMCSA–2001–9258; FMCSA–2003–14504; FMCSA–2003–15268; FMCSA–2005–20027; FMCSA–2005–21254; FMCSA–2007–27897]

Qualification of Drivers; Exemption Renewals; Vision

AGENCY: Federal Motor Carrier Safety Administration (FMCSA), DOT.

ACTION: Notice of final disposition.

SUMMARY: FMCSA previously announced its decision to renew the exemptions from the vision requirement in the Federal Motor Carrier Safety Regulations for 23 individuals. FMCSA has statutory authority to exempt individuals from the vision requirement if the exemptions granted will not compromise safety. The Agency has concluded that granting these exemptions will provide a level of safety that will be equivalent to, or greater than, the level of safety maintained without the exemptions for these commercial motor vehicle (CMV) drivers.

FOR FURTHER INFORMATION CONTACT: Dr. Mary D. Gunnels, Director, Medical Programs, (202) 366–4001, *fmcsamedical@dot.gov,* FMCSA, Department of Transportation, 1200 New Jersey Avenue, SE., Room W64–224, Washington, DC 20590–0001. Office hours are from 8:30 a.m. to 5 p.m. Monday through Friday, except Federal holidays.

SUPPLEMENTARY INFORMATION:

Electronic Access

You may see all the comments online through the Federal Document Management System (FDMS) at *http://www.regulations.gov.*

Background

Under 49 U.S.C. 31136(e) and 31315, FMCSA may grant an exemption for a 2-year period if it finds "such exemption would likely achieve a level of safety that is equivalent to, or greater than, the level that would be achieved absent such exemption." The statute also allows the Agency to renew exemptions at the end of the 2-year period. The comment period ended on September 25, 2009 (FR 74 43221).

Discussion of Comments

FMCSA received no comments in this proceeding.

Conclusion

The Agency has not received any adverse evidence on any of these drivers that indicates that safety is being compromised. Based upon its evaluation of the 23 renewal applications, FMCSA renews the Federal vision exemptions for Linda L. Billings, John A. Chizmar, Weldon R. Evans, Richard L. Gagnebin, Orasio Garcia, Leslie W. Good, Chester L. Gray, James P. Guth, Britt D. Hazelwood, William W. Hodgins, Gregory K. Lilly, Michael S. Maki, Larry T. Morrison, Kenneth A. Reddick, Leonard Rice, Jr., Juan M. Rosas, Francis L. Savell, James T. Sullivan, Steven C. Thomas, Edward A. Vanderhei, Larry J. Waldner, Karl A. Weinert and Kevin L. Wickard.

In accordance with 49 U.S.C. 31136(e) and 31315, each renewal exemption will be valid for 2 years unless revoked earlier by FMCSA. The exemption will be revoked if: (1) The person fails to comply with the terms and conditions of the exemption; (2) the exemption has resulted in a lower level of safety than was maintained before it was granted; or (3) continuation of the exemption would not be consistent with the goals and objectives of 49 U.S.C. 31136 and 31315.

Issued on December 22, 2009.

Larry W. Minor,

Associate Administrator for Policy and Program Development.

[FR Doc. 2010–198 Filed 1–8–10; 8:45 am]

BILLING CODE 4910–EX–P

DEPARTMENT OF VETERANS AFFAIRS

Allowance for Private Purchase of an Outer Burial Receptacle in Lieu of a Government-Furnished Graveliner for a Grave in a VA National Cemetery

AGENCY: Department of Veterans Affairs.

ACTION: Notice.

SUMMARY: Public Law 104–275 was enacted on October 9, 1996. It allows the Department of Veterans Affairs (VA) to provide a monetary allowance towards the private purchase of an outer burial receptacle for use in a VA national cemetery. Under VA regulation (38 CFR 38.629), the allowance is equal to the average cost of Government-furnished graveliners less any administrative costs to VA. The law provides a veteran's survivors with the option of selecting a Government-furnished graveliner for use in a VA national cemetery where such use is authorized.

The purpose of this Notice is to notify interested parties of the average cost of Government-furnished graveliners, administrative costs that relate to processing and paying the allowance, and the amount of the allowance payable for qualifying interments that occur during calendar year 2010.

FOR FURTHER INFORMATION CONTACT: Tamula Jones, Budget Operations and Field Support Division (41B1B), National Cemetery Administration, Department of Veterans Affairs, 810 Vermont Avenue, NW., Washington, DC 20420. *Telephone:* 202–461–6688 (this is not a toll-free number).

SUPPLEMENTARY INFORMATION: Under 38 U.S.C. 2306(e)(3) and (4) and Public Law 104–275, Section 213, VA may provide a monetary allowance for the private purchase of an outer burial receptacle for use in a VA national cemetery where its use is authorized. The allowance for qualified interments that occur during calendar year 2010 is the average cost of Government-furnished graveliners in fiscal year 2009, less the administrative costs incurred by VA in processing and paying the allowance in lieu of the Government-furnished graveliner.

The average cost of Government-furnished graveliners is determined by taking VA's total cost during a fiscal year for single-depth graveliners that were procured for placement at the time of interment and dividing it by the total number of such graveliners procured by VA during that fiscal year. The calculation excludes both graveliners procured and pre-placed in gravesites as part of cemetery gravesite development projects and all double-depth graveliners. Using this method of computation, the average cost was determined to be $264.00 for fiscal year 2009.

The administrative costs incurred by VA consist of those costs that relate to processing and paying an allowance in lieu of the Government-furnished graveliner. These costs have been determined to be $9.00 for calendar year 2010.

The allowance payable for qualifying interments occurring during calendar year 2010, therefore, is $255.00.

Approved: December 23, 2009.

John Gingrich,

Chief of Staff Department of Veteran Affairs.

[FR Doc. 2010–155 Filed 1–8–10; 8:45 am]

BILLING CODE P

Federal Register

Monday,
January 11, 2010

Part II

Securities and Exchange Commission

17 CFR Parts 275, 276 and 279

Custody of Funds or Securities of Clients by Investment Advisers; Commission Guidance Regarding Independent Public Accountant Engagements Performed Pursuant to Rule 206(4)–2 Under the Investment Advisers Act of 1940; Final Rules

SECURITIES AND EXCHANGE COMMISSION

17 CFR Parts 275 and 279

[Release No. IA–2968; File No. S7–09–09]

RIN 3235–AK32

Custody of Funds or Securities of Clients by Investment Advisers

AGENCY: Securities and Exchange Commission.

ACTION: Final rule.

SUMMARY: The Securities and Exchange Commission is adopting amendments to the custody and recordkeeping rules under the Investment Advisers Act of 1940 and related forms. The amendments are designed to provide additional safeguards under the Advisers Act when a registered adviser has custody of client funds or securities by requiring such an adviser, among other things: To undergo an annual surprise examination by an independent public accountant to verify client assets; to have the qualified custodian maintaining client funds and securities send account statements directly to the advisory clients; and unless client assets are maintained by an independent custodian (*i.e.,* a custodian that is not the adviser itself or a related person), to obtain, or receive from a related person, a report of the internal controls relating to the custody of those assets from an independent public accountant that is registered with and subject to regular inspection by the Public Company Accounting Oversight Board. Finally, the amended custody rule and forms will provide the Commission and the public with better information about the custodial practices of registered investment advisers.

DATES: *Effective Date:* March 12, 2010. *Compliance Dates:* An investment adviser required to obtain a surprise examination must enter into a written agreement with an independent public accountant that provides that the first examination will take place by December 31, 2010. An investment adviser also required to obtain or receive an internal control report because it or a related person maintains client assets as a qualified custodian must obtain or receive an internal control report within six months of the effective date. Section III of this Release contains additional information on the effective and compliance dates.

FOR FURTHER INFORMATION CONTACT: Vivien Liu, Senior Counsel, Melissa A. Roverts, Senior Counsel, Daniel S. Kahl, Branch Chief, or Sarah A. Bessin, Assistant Director, at (202) 551–6787 or *IArules@sec.gov,* Office of Investment Adviser Regulation, Division of Investment Management, U.S. Securities and Exchange Commission, 100 F Street, NE., Washington, DC 20549–8549.

SUPPLEMENTARY INFORMATION: The Securities and Exchange Commission ("Commission") is adopting amendments to rule 204–2 [17 CFR 275.204–2], rule 206(4)–2 [17 CFR 275.206(4)–2] under the Investment Advisers Act of 1940 [15 U.S.C. 80b] (the "Advisers Act" or "Act"), to Form ADV [17 CFR 279.1], and to Form ADV–E [17 CFR 279.8].

Table of Contents

I. Background
II. Discussion
III. Effective and Compliance Dates
IV. Paperwork Reduction Act
V. Cost-Benefit Analysis
VI. Final Regulatory Flexibility Analysis
VII. Effects on Competition, Efficiency and Capital Formation
VIII. Statutory Authority
Text of Rule and Form Amendments

I. Background

Earlier this year we began a comprehensive review of our rules regarding the safekeeping of investor assets in connection with our bringing several fraud cases involving investment advisers and broker-dealers.[1] As part of this effort, we proposed amendments to rule 206(4)–2, the rule under the Advisers Act that governs an adviser's custody of client funds and securities ("client assets").[2] Our staff is currently reviewing potential recommendations to enhance the oversight of broker-dealer custody of customer assets. Thus today's adoption represents a first step in the effort to enhance custody protections, with consideration of additional enhancements of the rules governing custody of customer assets by broker-dealers to follow.

The amendments we proposed earlier this year to rule 206(4)–2 were designed to strengthen the existing custodial controls imposed by the rule. Under rule 206(4)–2, advisers, in most cases, must maintain client funds and securities with a "qualified custodian."[3] Qualified custodians under the rule include the types of financial institutions to which clients and advisers customarily turn for custodial services, including banks, registered broker-dealers, and registered futures commission merchants.[4] These institutions' custodial activities are subject to regulation and oversight.[5] In addition, advisers must have a reasonable belief that the qualified custodian sends account statements directly to advisory clients.[6] The rule also permits advisers (rather than custodians) to send account statements if the adviser is subject to an annual surprise verification of client assets by an independent public accountant.[7]

The proposed amendments were designed to eliminate certain exemptions in the rule, thus expanding the protections afforded advisory clients by requiring all registered advisers with custody of client assets to be subject to an annual surprise examination,[8] and requiring that they have a reasonable belief that qualified custodians send account statements directly to the

[1] Since the beginning of this year, the Commission has brought several enforcement actions against investment advisers and broker-dealers alleging fraudulent conduct, including misappropriation or other misuse of investor assets. *See* cases cited in footnote 11 of *Custody of Funds or Securities of Clients by Investment Advisers,* Investment Advisers Act Release No. 2876 (May 20, 2009) [74 FR 25354 (May 27, 2009)] (the "Proposing Release"). In addition to these actions, we have brought several others more recently alleging similar types of misconduct. *See, e.g., In re Stratum Wealth Management, LLC and Charles B. Ganz,* Advisers Act Release No. 2930 (Sept. 29, 2009) (settled action in which Commission alleged a registered investment adviser, through its sole owner and chairman, misappropriated over $400,000 from a client account during the course of nearly a year to pay for his personal expenses and falsified client account statements, among other things); *SEC* v. *Titan Wealth Management, LLC, et al.,* Litigation Release No. 21184 (Aug. 26, 2009) (complaint alleges a registered investment adviser misappropriated 80% of investor funds for personal use, to make Ponzi payments to certain investors or transfers to others); *In the Matter of Paul W. Oliver, Jr.,* Advisers Act Release No. 2903 (Jul. 17, 2009) (settled action in which Commission alleged a registered investment adviser's chairman aided and abetted misappropriations of more than $23 million in client funds by the investment adviser's co-founder and president); *SEC* v. *Weitzman,* Litigation Release No. 21078 (June 10, 2009) (settled action in which Commission's complaint alleged registered investment adviser's co-founder and principal stole more than $6 million in investor funds for his own personal use and falsified client account statements). *See also SEC* v. *Frederick J. Barton, Barton Asset Management, LLC, and TwinSpan Capital Management,* LLC, Litigation Release No. 21016 (Apr. 29, 2009) (default judgment entered against registered investment adviser and its direct and indirect majority owner for diverting approximately $493,100 of offering proceeds for personal use and for misappropriating $685,000 from one advisory client and $970,000 from another); *SEC* v. *Crossroads Financial Planning, Inc., et al.,* Litigation Release No. 20996 (Apr. 10, 2009) (complaint alleges registered investment adviser, through its president, chief operating officer and principal owner, misappropriated at least $2.3 million of client assets).

[2] We use the term "client assets" solely for ease of reference in this Release; it does not modify the scope of client funds or securities subject to the rule.

[3] Rule 206(4)–2(a)(1).

[4] Rule 206(4)–2(c)(3).

[5] *See* Proposing Release, at note 4.

[6] Rule 206(4)–2(a)(3)(i).

[7] Rule 206(4)–2(a)(3)(ii).

[8] Proposed rule 206(4)–2(a)(4).

clients.[9] When the adviser or its related person serves as qualified custodian for client assets, the proposed amendments would require that the adviser undergo an annual surprise examination and obtain, or receive from the related person, an internal control report with respect to custody controls, both of which must be performed or prepared by an independent public accountant that is registered with, and subject to regular inspection by, the Public Company Accounting Oversight Board ("PCAOB").[10] Amendments to Form ADV would require advisers to report current information to us about these custodial arrangements.

We received more than 1,300 comment letters on the proposed amendments. Most were from investment advisers, broker-dealers, banks, and their trade associations that would be affected by the amended rule and which objected to significant parts of our rulemaking initiative.[11] Commenters generally expressed their support for our goal of strengthening protections provided to advisory clients under the custody rule. Most urged us to make changes to our proposal particularly as it applies to advisers that have custody solely because of their authority to deduct advisory fees from client accounts. Many suggested that we update our guidance on the elements of the annual surprise examination performed by an independent public accountant.[12]

II. Discussion

We are today adopting amendments to rule 206(4)–2 to strengthen controls over the custody of client assets by registered investment advisers and to encourage the use of independent custodians. We are also adopting related amendments to rule 204–2, Form ADV, and Form ADV–E that will improve our ability to oversee advisers' custody practices. In response to comments, we made several modifications from the proposal. In addition, we are today publishing a companion release to provide guidance for accountants with respect to the surprise examination and internal control report required under rule 206(4)–2.

We believe these amendments, together with the guidance for accountants, will provide for a more robust set of controls over client assets designed to prevent those assets from being lost, misused, misappropriated or subject to advisers' financial reverses. We acknowledge that no set of regulatory requirements we could adopt will prevent all fraudulent activities by advisers or custodians. We believe, however, that this rule, together with our examination program's increased focus on the safekeeping of client assets, will help deter fraudulent conduct, and increase the likelihood that fraudulent conduct will be detected earlier so that client losses will be minimized.

A. Delivery of Account Statements and Notice to Client

As discussed above, rule 206(4)–2 currently requires advisers that have custody, with certain limited exceptions, to maintain client funds or securities with a "qualified custodian," which the adviser must have a reasonable basis for believing sends an account statement, at least quarterly, to each client for which the qualified custodian maintains funds or securities.[13] The requirement is designed so that advisory clients will receive a statement from the qualified custodian that they can compare with any statements (or other information) they receive from their adviser to determine whether account transactions, including deductions to pay advisory fees, are proper.[14]

We are adopting, as proposed, an amendment to the rule that eliminates an alternative to the requirement under which an adviser can send quarterly account statements to clients if it undergoes a surprise examination by an independent public accountant at least annually. We believe that direct delivery of account statements by qualified custodians will provide greater assurance of the integrity of account statements received by clients.

Most commenters that addressed this aspect of our proposal supported it as reflective of best practices followed by most advisers.[15] A few commenters objected to the proposal, suggesting that a client's desire for privacy may override the Commission's goal of investor protection.[16] In light of recent frauds, we believe generally that the protections provided by direct delivery of account statements by custodians are of substantially greater value than the privacy and confidentiality concerns that led us to permit this alternative.[17] Privacy concerns can be addressed through custodial contracts, or other agreements that restrict the custodian's use of confidential information, as one commenter suggested.[18]

As proposed, the amended rule requires that an adviser's reasonable belief that the qualified custodian sends account statements directly to clients

[9] Proposed rule 206(4)–2(a)(3). The proposed amendments, however, would not eliminate an exception to the direct delivery requirement currently available to advisers to pooled investment vehicles that are subject to an annual audit and distribute the audited financial statements to investors in the pool. *See* proposed rule 206(4)–2(b)(3).

[10] Proposed rule 206(4)–2(a)(6)(ii)(B).

[11] Other commenters included accountants, law firms, consultants, and investors. Of the 1,300 letters, approximately 1,100 were form letters or substantially similar letters submitted by smaller advisory firms.

[12] The comment letters are available for public inspection and photocopying in the Commission's Public Reference Room, 100 F Street, NE., Washington, DC (File No. S7–09–09). They are also available on our Web site at *http://www.sec.gov/comments/s7-09-09/s70909.shtml.*

[13] Rule 206(4)–2(a)(1). If the adviser is a general partner of a limited partnership or holds a similar position with another type of pooled investment vehicle, the account statement must be provided to the limited partners or other investors in the pooled investment vehicle. Rule 206(4)–2(a)(3)(iii). For convenience, we will presume in this Release that all advisers to pooled investment vehicles hold such a position.

[14] Rule 206(4)–2(a)(3)(i). The rule provides an exception to this requirement for an adviser to a pooled investment vehicle if the pooled investment vehicle is audited annually by an independent public accountant and distributes the audited financial statements to the investors in the pool. *See* rule 206(4)–2(b)(3).

[15] Comment letter of Compliance Solution Group (July 24, 2009) ("CAS Letter"); comment letter of CFA Institute Centre for Financial Market Integrity (Dec. 11, 2009) ("CFA Institute Letter"); comment letter from The Cornell Securities Law Clinic (July 28, 2009) ("Cornell Letter"); comment letter from E*Trade Financial Corp. (July 28, 2009) ("E*Trade Letter"); comment letter from Investment Adviser Association (July 24, 2009) ("IAA Letter"); comment letter from North American Securities Administrators Association, Inc. (Aug. 5, 2009) ("NASAA Letter"); comment letter from National Regulatory Services (July 28, 2009) ("NRS Letter"); comment letter from Timothy P. Turner (July 27, 2009) ("Turner Letter").

[16] Comment letter from American Bar Association (Committee on Federal Regulation of Securities) (July 28, 2009) ("ABA Letter"); NRS Letter; comment letter from The Private Equity Council (July 28, 2009) ("PEC Letter").

[17] *See Custody of Funds or Securities of Clients by Investment Advisers,* Investment Advisers Act Release No. 2176 (Sept. 25, 2003) [68 FR 56692 (Oct. 1, 2003)] ("2003 Adopting Release"), at Section II.C. Qualified custodians may use service providers to deliver their account statements. The rule does not prohibit this practice, so long as the statements are sent to the client directly and not through the adviser. *See* 2003 Adopting Release at n.30.

[18] *See* IAA Letter. In support of its assertion that a client's desire for privacy could override the Commission's goal of investor protection, the ABA argued that contractual or other alternative means of protecting confidentiality would be insufficient and potentially very costly, although they did not provide support for these assertions. We note, in addition to contractual protections, other privacy protections are relevant in this context. As discussed in the Proposing Release at n.60, a U.S. qualified custodian would, with respect to individual clients who obtain custodial services for their personal, family or household purposes, be subject to the limitations on information sharing in the privacy rules adopted pursuant to Title V of the Gramm-Leach-Bliley Act. *See, e.g.,* 12 CFR Parts 40, 216, 332, 573 (privacy rules adopted by the Office of the Comptroller of the Currency, the Federal Reserve Board, the Office of Thrift Supervision, and the National Credit Union Administration); 17 CFR Parts 160, 248 (privacy rules adopted by the Commodity Futures Trading Commission and the SEC).

must be formed by the adviser after "due inquiry." [19] We are not prescribing a single method for forming this belief, as was suggested by one commenter,[20] but rather are providing advisers with flexibility to determine how best to meet this requirement. For instance, an adviser could form a reasonable belief after "due inquiry" if the qualified custodian provides the adviser with a copy of the account statement that was delivered to the client.[21]

Rule 206(4)–2 requires investment advisers to notify their clients promptly upon opening a custodial account on their behalf and when there are changes to the information required in that notification.[22] We are amending the rule, as proposed, to require advisers to include a legend in the notice urging clients to compare the account statements they receive from the custodian with those they receive from the adviser.[23] Several commenters asserted that advisers may not (and are not required by rule 206(4)–2 to) send statements separate from the ones the custodian delivers and thus the proposed disclosure could confuse clients.[24] We agree and have, therefore, modified this notice requirement so that the cautionary legend must be included only if the adviser elects to send its own account statements to clients.[25] Finally, we had requested comment on whether to require advisers who choose to send statements to also include in those statements the cautionary legend urging clients to compare the information the adviser sends to clients with the information reflected in the qualified custodian's account statements.[26] We believe providing regular notice will serve to more effectively remind clients to take steps to protect their assets. Accordingly, we are amending the rule to require those investment advisers, in any subsequent statements they deliver to clients after the initial notice, to urge clients to compare the adviser's statements with the account statements they receive from the custodian.[27]

B. Annual Surprise Examination of Client Assets

The Commission is adopting the proposed amendment to rule 206(4)–2 to require registered advisers with custody of client assets to undergo a surprise examination (or an audit, if applicable) of those assets by an independent public accountant, except as discussed below.[28] We are also adopting several amendments to the custody rule and related forms that will strengthen the utility of the surprise examination as a means of deterring misuse of client assets and will improve our ability to identify potential misuse of those assets. We are revising the guidance we provide to accountants that are engaged to perform these examinations in order to modernize the surprise examination and make it more effective. We believe these changes, discussed below, will improve protection of client assets.

1. Applicability of Surprise Examination

We proposed to require that all advisers with custody obtain a surprise examination of client assets by an independent public accountant in order to provide "another set of eyes" on client assets, and thus an additional set of protections against their misappropriation. Because advisers with custody often have authority to access, obtain and, potentially, misuse client funds or securities, we believed the additional review provided by an independent public accountant would help identify problems that clients may not, and thus would provide deterrence against fraudulent conduct by advisers.[29]

Many commenters opposed the surprise examination requirement, arguing that it would provide little additional protection to client assets when assets are held with an independent qualified custodian that sends account statements directly to clients.[30] Almost all advisers that commented raised concerns about the high costs of the surprise examination and many asserted that the costs could drive smaller advisers that typically have custody only because of authority to deduct advisory fees out of business,[31] or, with respect to advisers that serve in capacities such as trustee on a limited basis, would cause them to cease providing such services to their clients.[32]

The focus of most commenters, however, was not on the utility of the surprise examination, but whether the proposed requirement should apply to certain advisers and advisory accounts, which we address below.[33] Some urged

[19] Amended rule 206(4)–2(a)(3).

[20] Comment letter of Fifth Third Asset Management, Inc. (July 28, 2009) ("FTAM Letter").

[21] This practice is followed by many advisers today. Commenters suggested that we permit advisers to satisfy the requirement of forming a reasonable belief after "due inquiry" by accessing qualified custodian account statements through the custodian's Web site. *See* comment letter from Curian Capital LLC, Financial Wealth Management, Inc, LPL Financial Corporation, and SEI Investments Company (July 28, 2009) ("Curian Letter"). We believe that accessing account statements through the Web site merely confirms that they are available. If an adviser does not take additional steps to determine whether account statements were sent to clients, or that clients obtained statements through the Web site, the adviser would have an inadequate basis for forming a reasonable belief, after due inquiry, that the qualified custodian sends account statements to clients.

[22] Rule 206(4)–2(a)(2).

[23] Proposed rule 206(4)–2(a)(2). One commenter suggested not only requiring the legend in the initial notice, as proposed, but also adding a requirement to include the legend as an annual reminder in the annual Form ADV delivery offer or in the annual privacy statement. *See* comment letter of The National Association of Personal Financial Advisors (July 21, 2009) ("NAPFA Letter"). We would not discourage advisers from adopting such a practice. As described above, we are adopting a regular notice requirement today for advisers.

[24] CAS Letter; comment letter from Dechert LLP (July 28, 2009) ("Dechert Letter"); IAA Letter; comment letter from MarketCounsel, LLC (July 28,2009) ("MarketCounsel Letter"); NRS Letter.

[25] Amended rule 206(4)–2(a)(2).

[26] *See* Proposing Release, at Section II.C. We did not receive comment on this particular approach.

[27] Amended rule 206(4)–2(a)(2).

[28] Amended rule 206(4)–2(a)(4).

[29] Some commenters agreed and expressed support of this proposal. *See* comment letter of Ascendant Compliance Management (July 27, 2009) (expressing support with respect to advisers that are registered as broker-dealers ("dual registrants")); CFA Institute Letter; comment letter of CLS Investments, LLC (July 28, 2009) ("CLS Letter") (expressing support with respect to dual registrants); comment letter of The Consortium (July 18, 2009) ("Consortium Letter") (supporting the requirement other than for advisers who have custody solely because of their authority to deduct advisory fees from client accounts); comment letter of First Manhattan Co. (July 28, 2009) ("FMC Letter") (expressing support with respect to dual registrants); NASAA Letter.

[30] *See, e.g.,* ABA Letter; comment letter of Advisor Solution Group (July 28, 2009) ("ASG Letter"); comment letter of Davis Polk & Wardwell LLP (July 28, 2009) ("Davis Polk Letter"); comment letter of Grandfield & Dodd, LLC (July 28, 2009) ("G&D Letter"); Form Letter F; comment letter of Financial Planning Association (July 28, 2009) ("FPA Letter"); IAA Letter; comment letter of Jackson, Grant Investment Advisers, Inc. (July 28, 2009) ("Jackson Letter"); MarketCounsel Letter; NRS Letter; comment letter of Pickard and Djinis LLP (July 28, 2009) ("Pickard Letter"); comment letter of SIFMA Asset Management Group (July 28, 2009) ("SIFMA(AMG) Letter").

[31] *See, e.g.,* comment letter of TD Ameritrade, Inc. (July 24, 2009) ("Ameritrade Letter"); CAS Letter; Cornell Letter; comment letter of Ronald P. Denk (July 3, 2009) ("Denk Letter"); comment letter of Janet Elder (July 1, 2009); Form Letter D; comment letter of Financial Services Institute (July 28, 2009) ("FSI Letter"); G&D Letter; comment letter of Thomas Hamilton (July 23, 2009); IAA letter; comment letter of The International Association of Small Broker Dealers and Advisors (May 27, 2009) ("IASBDA Letter"); comment letter of Carol K. Lampe (July 1, 2009); comment letter of Walter Marbert (July 1, 2009); comment letter of Scott A. McCord (July 1, 2009); NAPFA Letter; comment letter of Don Slabaugh (July 1, 2009); comment letter of Jeff Toadvine (July 1, 2009); comment letter of Anthony W. Welch (July 1, 2009).

[32] *See infra* note 38.

[33] Most commenters urged us to except advisers that have custody solely because of deducting advisory fees from the surprise examination requirement. *See, e.g.,* ASG Letter; comment letter of Certified Financial Planner Board of Standards, Inc. (July 28, 2009) ("CFP Board Letter"); comment letter of Center for Capital Markets Competitiveness, Chamber of Commerce (July 28, 2009) ("Chamber of Commerce Letter"); Curian Letter; Dechert Letter; E*Trade Letter; comment

that if we expand the surprise examination requirement, we should update our guidance to accountants on examination methodology, which dates back to 1966 and requires verification of all client assets, a potentially expensive procedure not required in most audits.[34]

We believe the surprise examination requirement will deter fraudulent conduct by investment advisers, and that it provides important protections to advisory clients, even when their assets are maintained by an independent qualified custodian.[35] If fraud does occur, a surprise examination will increase the likelihood that it is uncovered and thus reduce client losses.[36] Therefore, we are requiring advisers with custody of client assets to obtain a surprise examination (or an audit, if applicable in the case of a pooled investment vehicle) of client assets by an independent public accountant, other than as discussed below.[37]

We acknowledge the concerns raised by commenters with respect to the impact of the surprise examination requirement on smaller advisers whose client assets are maintained by an independent qualified custodian. For this reason, we have directed our staff to evaluate the impact of the surprise examination requirement on smaller advisers that have the authority to obtain possession of client funds or securities and whose client assets are maintained by an independent qualified custodian. We have also asked the staff to evaluate the impact of the surprise exam on these advisers' clients. Following the completion of the first round of surprise examinations of these advisers under the requirements of the amended rule, our staff will conduct a review and provide the Commission with the results of this review, along with any recommendations for amendments necessary to improve the effectiveness of the rule as it applies to these advisers, or address unnecessary burdens on them.

a. Advisers With Limited Custody Due to Fee Deduction

Commenters have persuaded us that the surprise examination will not provide materially greater protection to advisory clients when the adviser has custody of client assets *solely* because of its authority to deduct advisory fees from client accounts.[38] The principal risk associated with this limited form of custody is that a fee will be deducted to which the adviser is not entitled under the advisory contract. The amended rule addresses this risk by enabling the client to monitor the amount of advisory fees deducted by reviewing the account statement which, as discussed above, must be sent directly to the client by the qualified custodian.[39] Further, as several commenters noted the surprise examination may not be an effective tool to identify inappropriate fee deductions as it requires the accountant to verify client assets, not determine the accuracy of fees paid.[40] On balance, we believe that the magnitude of the risks of client losses from overcharging advisory fees does not warrant the costs of a obtaining a surprise examination. However, we do believe that appropriate controls should be in place regarding fee deduction, as discussed below.[41]

b. Pooled Investment Vehicle Audit

We proposed to require all registered investment advisers with custody of client assets to obtain an annual surprise examination, which included pooled investment vehicles subject to an annual financial statement audit. Several commenters asserted that a surprise examination would be duplicative of the annual financial statement audit and would not materially benefit investors.[42]

During the course of a financial statement audit, the accountant performs procedures comparable to those performed as part of a surprise examination, including verifying the existence of the pooled investment vehicle's funds and securities and obtaining confirmation from investors.[43] The financial statement audit also addresses additional matters important to pool investors that are not covered by the surprise examination, such as tests of valuations of pool investments, income, operating expenses, and, if

letter of GE Asset Management (July 24, 2009) ("GE Asset Letter"); G&D Letter; Form Letters B, F, and G; FPA Letter; IAA Letter; Jackson Letter; comment letter of The Money Management Institute (July 28, 2009) ("MMI Letter"); NRS Letter; SIFMA(AMG) Letter; comment letter of SIFMA Private Client Legal Committee (July 28, 2009) ("SIFMA(PCLC) Letter"); comment letter of Warshaw Burstein Cohen Schlesinger & Kuh, LLP (July 24, 2009) ("Warshaw Letter").

[34] Comment letter of The American Institute of Certified Public Accountants (July 28, 2009) ("AICPA Letter); comment letter of Center for Audit Quality (July 28, 2009) ("CAQ Letter"); Chamber of Commerce Letter; comment letter of Cohen Fund Audit Services, Ltd. (July 21, 2009) ("Cohen Letter"); Curian Letter; comment letter of Deloitte & Touche LLP (July 28, 2009) ("Deloitte Letter"); comment letter of Ernst & Young (July 28, 2009) ("E&Y Letter"); FPA Letter; FTAM Letter; comment letter of KPMG LLP (July 28, 2009) ("KPMG Letter"); comment letter of Managed Fund Association (July 28, 2009) ("MFA Letter"); MMI Letter; comment letter of McGladrey & Pullen LLP (July 28, 2009) ("M&P Letter"); comment letter of PricewaterhouseCoopers LLP (July 28, 2009) ("PWC Letter"); comment letter of Charles Schwab (July 28, 2009) ("Schwab Letter"); SIFMA(AMG) Letter; SIFMA(PCLC) Letter.

[35] We have recently brought enforcement cases in which we alleged advisers misappropriated client assets that were maintained by an independent qualified custodian. *See In re Stratum Wealth Management, LLC and Charles B. Ganz,* Advisers Act Release No. 2930 (Sept. 29, 2009); *In the Matter of Paul W. Oliver, Jr.,* Advisers Act Release No. 2903 (Jul. 17, 2009); *SEC* v. *Weitzman,* Litigation Release No. 21078 (June 10, 2009); *SEC* v. *Crossroads Financial Planning, Inc., et al.,* Litigation Release No. 20996 (Apr. 10, 2009).

[36] Under the amended rule, the independent public accountant conducting a surprise examination will verify client funds and securities of which an adviser has custody, including those maintained with a qualified custodian and those that are not required to be maintained with a qualified custodian, such as certain privately offered securities and mutual fund shares.

[37] Amended rule 206(4)–2(a)(4). An investment adviser required to obtain a surprise examination must enter into a written agreement with an independent public accountant that provides that the first examination will take place by December 31, 2010 or, for advisers that become subject to the rule after the effective date, within six months of becoming subject to the requirement. If the adviser itself maintains client assets as qualified custodian, however, the agreement must provide for the first surprise examination to occur no later than six months after obtaining the internal control report. *See infra* Section III.B.1.

[38] Amended rule 206(4)–2(b)(3). This exception would also be available to such an adviser when the adviser can rely on amended rule 206(4)–2(b)(6). *See infra* Section II.C.2. of this Release. The exception would not be available, however, to an adviser that has custody under the rule for other reasons. Several commenters opposed applying the surprise examination requirement to advisers that serve as trustees for their clients. *See* comment letter of Allegheny Investments (July 28, 2009); Consortium Letter; G&D Letter; IAA Letter; NRS Letter; comment letter of Bruce Siegel (July 28, 2009). Some explained that most advisers that serve as trustees do so as a convenience to existing clients and either do not charge a separate fee or charge only a minimal fee for this service, and that requiring surprise examinations for these advisers will discourage advisers from serving as trustees and result in clients paying higher fees for this service. An adviser acting as trustee typically has significant authority over the assets in the trust, which would likely include the ability to access and, potentially, misuse those assets. We believe that the broad access that trustees typically have to trust assets makes the protections of the surprise examination important for these advisory clients to protect against potential abuse.

[39] Many commenters expressed similar views in their letters. *See* ASG Letter; CFP Board Letter; Dechert Letter; E*Trade Letter; FMC Letter; GE Asset Letter; G&D Letter; Form Letters B, F, and G; IAA Letter; Jackson Letter; MMI Letter; NRS Letter; SIFMA(AMG) Letter; SIFMA(PCLC) Letter; Warshaw Letter.

[40] ABA Letter; Dechert Letter; FMC Letter; IAA Letter; MMI Letter; Pickard Letter; comment letter of Seward & Kissel LLP (July 29, 2009) ("S&K Letter").

[41] *See infra* notes 140 and 141 and accompanying text.

[42] *See* comment letter of Adams Street Partners, LLC (July 28, 2009) ("Adams Street Letter"); Davis Polk Letter; Deloitte Letter; IAA Letter; MFA Letter; comment letter of The Bank of New York Mellon (July 28, 2009) ("Mellon Letter"); comment letter of National Society of Compliance Professionals, Inc. (July 28, 2009) ("NSCP Letter"); comment letter of National Venture Capital Association (July 28, 2009) ("NVCA Letter"); PEC Letter; SIFMA(AMG) Letter; S&K Letter; Warshaw Letter.

[43] *See* AICPA, *Audit and Accounting Guide,* Investment Companies, (May 1, 2009).

applicable, incentive fees and allocations that accrue to the adviser.[44]

We believe that these and other procedures performed by the accountant during the course of a financial statement audit provide meaningful protections to investors, and that the surprise examination would not significantly add to these protections. Although the annual audit is not required to be performed at a time of the accountant's choosing (as is a surprise examination), we believe other elements of the audit incorporate an element of uncertainty similar to the surprise element of the surprise examination, with corresponding benefits to investors. Specifically, in the course of an annual audit, the auditor will select transactions to test during the period that the adviser will not be able to anticipate.

We have therefore amended the rule to deem an adviser to a pooled investment vehicle that is subject to an annual financial statement audit by an independent public accountant, and that distributes the audited financial statements prepared in accordance with generally accepted accounting principles to the pool's investors,[45] to have satisfied the annual surprise examination requirement ("annual audit provision").[46]

In addition, at the suggestion of several commenters,[47] we are limiting the rule's recognition of such audits as satisfying the surprise verification requirement to those audits performed by an independent public accountant registered with, and subject to regular inspection by, the PCAOB.[48] We have greater confidence in the quality of such audits.[49]

We note that under rule 206(4)–2, an adviser to a pooled investment vehicle that distributes to its investors audited financial statements is not required to have a reasonable belief that a qualified custodian delivers account statements to investors.[50] As a consequence, investors in pooled investment vehicles do not have the benefit of regularly receiving reports that the assets underlying their investments are properly held. We are therefore concerned that the current protections of the rule may be insufficient, and we have directed our staff to explore ways in which we could remedy this potential shortcoming while respecting the confidential nature of proprietary information.

2. Commission Reporting

We are also adopting a number of rule and form amendments that will result in the Commission and the public receiving greater information about the custody practices of advisers and thus a greater ability to identify potential risks to clients. Under amended rule 206(4)–2, each investment adviser subject to the surprise examination requirement must enter into a written agreement with an independent public accountant to conduct the surprise examination. The agreement must require the accountant, among other things, to notify the Commission within one business day of finding any material discrepancy during the course of the examination, and to submit Form ADV–E to the Commission accompanied by the accountant's certificate within 120 days of the time chosen by the accountant for the surprise examination, stating that the accountant has examined the funds and securities and describing the nature and extent of the examination.[51] The agreement also must provide that, upon resignation or dismissal, the accountant must file within four business days a statement regarding the termination along with Form ADV–E.[52] Accountants will file Form ADV–E with us electronically, through the Investment Adviser Registration Depository ("IARD").[53] We are adopting these amendments as proposed. The information they provide will assist the Commission's examination staff and the public in identifying risks raised by the investment adviser's custodial practices and in determining the frequency and scope of our staff's examination of an investment adviser.

The new requirement that accountants file Form ADV–E within 120 days of the time chosen by the accountant for the surprise examination is designed to require more timely completion of these examinations. Several commenters suggested that we extend the filing deadline to 180 days, asserting that more complex surprise examinations may take more time.[54] We note that these commenters' estimate of the duration of a surprise examination was based on the nature and extent of procedures contemplated under the existing guidance for accountants,[55] which many asserted was unnecessarily time consuming. As discussed more fully below, our revised guidance for accountants should address many of these concerns.[56] As a result, we believe that 120 days will be sufficient for an accountant to complete the examination.

Several commenters suggested we modify the requirement regarding the accountant's filing of a statement upon termination. Some argued that these filings should not be made available to

[44] *Id.*

[45] Amended rule 206(4)2(b)(4)(i) requires that the audited financial statements be distributed within 120 days of the end of the pooled investment vehicle's fiscal year. In 2006, our staff issued a letter indicating that it would not recommend enforcement action to the Commission under section 206(4) of the Act or rule 206(4)–2 against an adviser of a fund of funds relying on the annual audit provision of rule 206(4)–2 if the audited financial statements of the fund of funds are distributed to investors in the fund of funds within 180 days of the end of its fiscal year. *See ABA Committee on Private Investment Entities,* SEC Staff Letter (Aug. 10, 2006). The amendments we are adopting today do not affect the views of the staff expressed in that letter.

[46] Amended rule 206(4)–2(b)(4). We note that an adviser that relies on the annual audit provision must nonetheless undergo an annual surprise examination of non-pooled investment vehicle assets of which it has custody.

[47] ABA Letter; Adams Street Letter; comment letter of Coalition of Private Investment Companies (July 31, 2009) ("CPIC Letter"); MFA Letter.

[48] Amended rule 206(4)–2(b)(4). The independent public accountant must be registered with, and subject to regular inspection by, the PCAOB as of the commencement of the professional engagement period, and as of each calendar year-end. Several commenters suggested other approaches, including enhancing the audit performed on the pool to include verification of securities (SIFMA(AMG) Letter), requiring an internal control report only instead of both the report and a surprise examination (ABA Letter; PEC Letter), and requiring several specific custody controls for advisers to pooled investment vehicles (CPIC Letter). We have considered the alternative approaches, some of which are beyond the scope of the proposal, and we believe, for the reasons discussed above, that our amendment to this aspect of the rule strikes the right balance.

[49] *See infra* note 122 and accompanying text.

[50] Rule 206(4)–2(b)(4).

[51] Amended rule 206(4)–2(a)(4)(i) and (ii). The written agreement will also require, in accordance with the current requirements of rule 206(4)–2, the independent public accountant to perform the surprise examination. Advisers must maintain copies of these written agreements under rule 204–2(a)(10). The obligation to maintain the records will apply for five years from the end of the fiscal year during which the last entry was made, the first two years in an appropriate office of the investment adviser. Rule 204–2(e)(1).

[52] Amended rule 206(4)–2(a)(4)(iii). The written agreement must require that the statement include (i) the date of such termination or removal, and the name, address, and contact information of the accountant, and (ii) an explanation of any problems relating to examination scope or procedure that contributed to such termination. *Id.* One commenter specifically expressed support for these time frames. CFA Institute Letter.

[53] Until the IARD system is upgraded to accept Form ADV–E, accountants performing surprise examinations should continue paper filing of Form ADV–E. Advisers will be notified as soon as the IARD system can accept Form ADV–E.

[54] IAA Letter; M&P Letter; PWC Letter. *See also* Dechert Letter; KPMG Letter; SIFMA(AMG) Letter (advocating for an extension, but not specifying that it be 180 days). One commenter suggested that we shorten it to 45–60 days. CFA Institute Letter.

[55] *Statement of the Commission describing nature of examination required to be made of all funds and securities held by an investment adviser and the content of related accountant's certificate,* Accounting Series Release No. 103, Investment Advisers Act Release No. 201 (May 26, 1966) ("ASR No. 103").

[56] *See* Section II.B.4. of this Release.

the public,[57] that they should not be required if the accountant was terminated for innocuous reasons,[58] and that the adviser should have primary responsibility to report accountant dismissals, so that the accountant would submit a report only if the adviser failed to do so.[59] We have not revised the requirement in response to these comments. We believe it is important that the public have access to the termination statements to permit clients and prospective clients to assess for themselves the reasons for the termination of an accountant's engagement or an accountant's removal from consideration for being reappointed. Disclosure of a termination, even for apparently innocuous reasons, could provide useful information to advisory clients and to our staff. For example, identifying frequent changes in accountants could put clients and prospective clients on notice to inquire about the reasons for these events. Finally, while advisers are responsible for reporting accountant dismissals on Form ADV, the accountant's statement serves as an independent check on the adviser's filing and, as such, is important to increasing the effectiveness of the surprise examination requirement.

3. Privately Offered Securities

We are adopting, as proposed, amendments to rule 206(4)–2 to no longer permit the accountant conducting the annual verification of client assets to forego examining certain privately offered securities, as defined in the rule.[60] As a result, advisers that maintain custody of privately offered securities on behalf of clients will be subject to the surprise examination requirement.[61]

Several commenters supported expanding the rule in this respect.[62] Others, however, asserted that the risk of fraud or misappropriation is low with respect to privately offered securities because they are not easily transferable, while the costs and practical difficulties of including these securities in a surprise exam may be considerable.[63] While privately offered securities may present little risk with respect to transferability, they present significant risks in other regards. First, it is difficult for advisory clients to verify that these assets actually exist because ownership of such securities is recorded only on the issuers' books. Second, clients may have to rely on the information provided by the adviser to confirm their ownership of privately offered securities, as well as the existence of the underlying investment, when the adviser maintains custody of these securities.[64] Because clients are more dependent on the adviser with respect to the safeguarding of these securities, advisory clients may be exposed to additional risks when their advisers acquire these securities on their behalf. To mitigate these risks and to provide assurance that privately offered securities are properly safeguarded, we believe that it is appropriate to require an independent third-party to verify client ownership with the issuers of the securities by requiring that these securities be subject to the surprise examination requirement under the amended rule.[65]

It is our understanding that many accountants today do verify private securities in the course of a surprise examination, and several commenters requested that we provide guidance as to the procedures that an accountant should undertake with respect to the surprise examination of privately offered securities.[66] In our companion release, we provide guidance for accountants regarding conducting a surprise examination of client assets, including privately offered securities.[67]

4. Guidance for Accountants

In the Proposing Release, we requested that commenters address whether, and if so how, we should revise the guidance for accountants that we issued regarding the surprise examination.[68] Commenters that responded all generally agreed that our existing guidance, which we published in 1966, is inadequate because it neither reflects today's custodial practices nor adequately recognizes certain commonly accepted auditing practices.[69] In a companion release, we are providing updated guidance for accountants that addresses the surprise examination, as well as the internal control report required under amended rule 206(4)–2 and the relationship between them.[70] Our guidance discusses the relevant auditing and attestation standards that apply to these engagements, and, among other things, the nature and extent of the accountant's procedures with respect to the surprise examination. The revised guidance for accountants will

[57] E*Trade Letter (arguing more broadly that no Form ADV–E filings should be made public, regardless of the reason for filing); IAA Letter; S&K Letter; Turner Letter.

[58] Davis Polk Letter; E*Trade Letter; IAA Letter.

[59] KPMG Letter.

[60] The amended rule retains the current definition of "privately offered securities" as securities that are (i) acquired from the issuer in a transaction or chain of transactions not involving any public offering, (ii) uncertificated, and ownership thereof is recorded only on the books of the issuer or its transfer agent in the name of the client, and (iii) transferable only with prior consent of the issuer or holders of the outstanding securities of the issuer. *See* amended rule 206(4)–2(b)(2).

[61] We received various suggestions from commenters, some conflicting, regarding our approach to privately offered securities. *See* ABA Letter (suggesting that the Commission only subject privately offered securities held by the adviser or by related persons to surprise examinations, arguing that such a limitation would reduce costs and target the assets at greatest risk of misappropriation); MFA Letter (proposing that the Commission affirmatively state that some assets, such as bank loans and swaps, are not securities for purposes of rule 206(4)–2 and are, therefore, not subject to the rule). Others advocated expanding the annual verification requirement. *See* CPIC Letter (suggesting that the custody rule cover all assets held by private funds, not just securities and funds and proposing that all non-traditional assets should be held in the name of the custodian and all cash flows should be required to go through the custodian). We have considered the comments and, for the reasons discussed above, we believe our amendment to this aspect of the rule strikes the right balance with respect to privately offered securities.

[62] ABA Letter; CFA Institute Letter; CPIC Letter; comment letter of The New York State Society of Certified Public Accountants (July 27, 2009).

[63] Davis Polk Letter; MFA Letter; NVCA Letter; PWC Letter.

[64] Rule 206(4)–2 does not require advisers, with one limited exception, to maintain these assets with a qualified custodian because of the difficulties raised by recording ownership of the securities only on the books of the issuer. Rule 206(4)–2(b)(2). *See also* 2003 Adopting Release, at Section II.B.

[65] Under amended rule 206(4)–2 an adviser may maintain custody of privately offered securities without being subject to the requirements that apply to advisers that maintain custody of client assets as qualified custodians set forth in paragraph (a)(6) of the rule, such as the internal control report, because the adviser need not be a qualified custodian to maintain custody of those securities. Amended rule 206(4)–2(b)(2). If, however, the adviser holding the privately offered securities also has custody of other client funds or securities as qualified custodian, the adviser is subject to the requirements set forth in paragraph (a)(6) of the rule.

[66] MFA Letter; comment letter of The Association of Global Custodians (Aug. 03, 2009) ("AGC Letter"); MarketCounsel Letter; comment letter of Sullivan & Cromwell (July 28, 2009).

[67] *See infra* note 70 and accompanying text. In the Proposing Release we requested comment on whether we should require the accountant performing the surprise examination to perform testing on the valuation of securities, including privately offered securities. One commenter stated that, although valuation is a very important issue closely related to client assets, it covers an area that goes beyond custody. Dechert Letter. We agree and are therefore not requiring accountants to perform testing of valuation as part of the surprise examination.

[68] Proposing Release, at Section II.

[69] AICPA Letter; CAQ Letter; Chamber of Commerce Letter; Cohen Letter; Curian Letter; Deloitte Letter; E&Y Letter; FTAM Letter; KPMG Letter; MFA Letter; MMI Letter; M&P Letter; PWC Letter; Schwab Letter; SIFMA(AMG) Letter; SIFMA(PCLC) Letter.

[70] *See Commission Guidance Regarding Independent Public Accountant Engagements Performed Pursuant to Rule 206(4)–2 Under the Investment Advisers Act of 1940,* Investment Advisers Act Release No. 2969 (Dec. 30, 2009) ("Accounting Release").

modernize the procedures for the surprise examination.

C. Custody by Adviser and Related Person

As amended, rule 206(4)–2 imposes additional requirements when advisory client assets are maintained by the adviser itself or by a related person rather than with an independent qualified custodian. As proposed, the amended rule requires, in addition to the surprise examination discussed above,[71] that when an adviser or its related person serves as a qualified custodian for advisory client funds or securities under the rule, the adviser obtain, or receive from its related person, no less frequently than once each calendar year, a written report, which includes an opinion from an independent public accountant with respect to the adviser's or related person's controls relating to custody of client assets ("internal control report"), such as a Type II SAS 70 report.[72] The amended rule also requires, in these circumstances, that the accountant issuing the internal control report, as well as the accountant performing the surprise examination, be registered with, and subject to regular inspection by, the PCAOB.[73] The adviser must maintain the internal control report in its records and make it available to the Commission staff upon request.[74]

1. Internal Control Report

Related person custody arrangements can present higher risks to advisory clients than maintaining assets with an independent custodian. As we pointed out in the Proposing Release, several of the recent enforcement actions in which we have alleged misappropriation of client assets have involved advisers or related persons that maintained client assets.[75] We requested comment on whether we should prohibit advisers from advising clients whose assets are maintained with the adviser or a related person.

Some commenters supported requiring an "independent" qualified custodian,[76] although many commenters opposed the requirement.[77] Several argued that use of an independent custodian would be an impractical requirement for many types of advisory accounts held by smaller investors with broker-dealers, such as wrap fee accounts, in which a client receives bundled advisory and brokerage services from a single firm (or related firms) regulated as both an investment adviser and a broker-dealer.[78] It is common for institutional clients to maintain assets in a custodial account, often with a bank that is unaffiliated with the client's adviser. We are concerned, however, that requiring an independent custodian could make unavailable many advisory accounts popular with smaller investors, which are today maintained by the adviser or its affiliated brokerage firm or bank. Therefore, we are not amending the rule to require use of an independent custodian, although we encourage the use of custodians independent of the adviser to maintain client assets as a best practice whenever feasible.

To address the custodial risks associated with an affiliated custodial relationship, we proposed requiring, in addition to the surprise examination, an adviser to obtain, or receive from its related person, an annual internal control report, which would include an opinion from an independent public accountant with respect to the adviser's or related person's custody controls. We were concerned that the surprise examination alone would not adequately address custodial risks associated with self or related person custody because the independent public accountant seeking to verify client assets would rely, in part, on custodial reports issued by the adviser or the related person.

Several commenters expressed their support for the proposed internal control report requirement.[79] Two stated that our approach appropriately targets the frauds we are concerned about.[80] One large custodian urged us to require all qualified custodians to obtain an internal control report.[81] Another agreed with our assessment that when the adviser or its related person acts as qualified custodian, there is increased risk to clients because the adviser may "misappropriate assets as a result of collusion with [its] affiliated custodians."[82] Other commenters, including those representing banks and broker-dealers, however, objected to the internal control report requirement, arguing that qualified custodians are already subject to extensive regulatory oversight and that the additional requirement would be duplicative of existing legal and regulatory requirements.[83] They argued that we would be imposing an unnecessary additional regulatory burden on affected custodians.

The internal control report requirement we are adopting today will provide important additional safeguards for client assets maintained with the adviser or a related person. As discussed in more detail below, the adviser must obtain or receive an internal control report that demonstrates that it, or its related person, has established appropriate custodial

[71] *See supra* notes 28–37 and accompanying text. Several commenters asserted that the surprise examination would be duplicative of existing regulatory requirements (*see, e.g.,* comment letter of American Bankers Association (July 28, 2009)("American Bankers Letter"); comment letter of LPL Financial (July 28, 2009) ("LPL Letter"); Mellon Letter; Schwab Letter; and SIFMA(PCLC) Letter). As we discuss later, the surprise examination requirement is important and not duplicative because it works in concert with the internal control report to protect advisory clients and because there are no existing regulatory requirements specifically focused on risks that may arise in the self or affiliated custody context. *See infra* notes 85–87 and accompanying text. Other commenters agreed that the surprise examination and internal control report are independently valuable and not duplicative (*see* E&Y Letter and NASAA Letter).

[72] Amended rule 206(4)–2(a)(6)(ii). As discussed in more detail below, other types of reports could also satisfy the internal control report requirement. *See infra* notes 98–100 and accompanying text.

[73] Amended rule 206(4)–2(a)(6)(i) and (ii)(C). The Commission's standards for the independence of accountants is set forth in Article 2, Rule 2–01 of Regulation S–X [17 CFR 210.2–01]. *See* 2003 Adopting Release at n.32. Article 2–01 does not preclude the accountant performing the surprise examination from also preparing the internal control report. The determination, however, of whether an accountant is independent under Article 2–01 includes consideration of all the relevant facts and circumstances.

[74] Amended rule 204–2(a)(17)(iii).

[75] *See supra* note 1.

[76] *See, e.g.,* NASAA Letter; comment letter of The National Association of Active Investment Managers (July 27, 2009) ("NAAIM Letter"); NVCA Letter; comment letter of Kay Conheady (June 4, 2009); comment letter of Carol Y. Godsave (June 15, 2009); comment letter of Michael A. Pagano (June 26, 2009); comment letter of Robert J. Reed (June 1, 2009); comment letter of Robert N. Veres (June 27, 2009).

[77] *See, e.g.,* ABA Letter; AGC Letter; CLS Letter; Curian Letter; Davis Polk Letter; Dechert Letter; E*Trade Letter; FPA Letter; comment letter of Lincoln Investment (July 28, 2009); LPL Letter; comment letter of National Planning Holdings, Inc. (July 28, 2009) ("NPH Letter"); Pickard Letter; Schwab Letter; SIFMA(PCLC) Letter; comment letter of L.A. Schnase (July 3, 2009) ("Schnase Letter"); comment letter of State Street Corporation (July 28, 2009).

[78] ABA Letter; Curian Letter; Davis Polk Letter; E*Trade Letter; Pickard Letter; Schnase Letter; Schwab Letter; SIFMA(PCLC) Letter.

[79] AICPA Letter; CFP Board Letter; Cornell Letter; comment letter of Diamant Asset Management, Inc. (July 20, 2009); E&Y Letter; FMC Letter; IAA Letter; NASAA Letter; NPH Letter; Pickard Letter; comment letter of T. Rowe Price Associates, Inc. (July 28, 2009) ("T. Rowe Letter").

[80] CFP Board Letter; IAA Letter.

[81] Schwab Letter.

[82] ABA Letter.

[83] LPL Letter; MMI Letter; NSCP Letter; comment letter of Pershing LLC (July 28, 2009) ("Pershing Letter"); SIFMA(PCLC) Letter; American Bankers Letter; comment letter of J.P. Morgan (Aug. 26, 2009).

controls.[84] As we noted in the Proposing Release, the internal control report can significantly strengthen the utility of the surprise examination when the adviser or a related person acts as qualified custodian for client assets because it provides a basis for the independent public accountant performing the surprise examination to obtain additional comfort that the confirmations received from the related custodian are reliable.[85] The requirement to obtain an internal control report therefore serves both to inform the surprise examination process and may itself act as a deterrent to fraud by advisers that may consider misappropriating client assets directly or through a related person.[86]

We have carefully considered commenters' concerns about regulatory duplication in designing the internal control report requirement. We are adopting this requirement because there is no existing regulatory requirement applicable to investment advisers or other entities, such as broker-dealers and banks, that serve as qualified custodians that we believe is specifically focused on internal control risks that may arise in the affiliated custody context. We have, however, developed our guidance for accountants to permit accountants, when preparing an internal control report, to rely on their own relevant audit work performed for other purposes, including audit work performed to meet existing regulatory requirements, which should increase efficiencies in the audit process and help address commenters' concerns about duplication.[87]

We do not believe that the internal control report requirement will be unduly burdensome. A qualified custodian would only have to obtain an internal control report if it maintains the funds or securities of its own advisory clients or those of advisory clients of related persons. As one securities industry commenter noted, custodians often provide Type II SAS 70 reports to clients who demand a rigorous evaluation of internal control as a condition of obtaining their business.[88] A related person custodian therefore may be able to use a Type II SAS 70 report it is already obtaining and providing to other clients to satisfy the rule's requirement, and may also be able to use the same internal control report to satisfy the rule's requirement for several related advisers whose clients use the custodian.

The elements of the required internal control report are set forth in the companion release we are issuing today, which includes guidance for accountants regarding the overall objectives and scope of the internal control examination.[89] The internal control report must include the accountant's opinion as to whether the qualified custodian's internal controls have been placed in operation as of a specific date, and are suitably designed, and are operating effectively to meet control objectives related to custodial services, including the safeguarding of funds and securities of advisory clients during the year.[90] In order for the accountant to be able to form this opinion, the internal control report should address control objectives and associated controls related to the areas of client account setup and maintenance, authorization and processing of client transactions, security maintenance and setup, processing of income and corporate action transactions, reconciliation of funds and security positions to depositories and other unaffiliated custodians, and client reporting.[91]

We have revised the amended rule to state that, for the internal control report to satisfy the rule's requirements, the independent public accountant preparing the report must verify that the client funds and securities are reconciled to a custodian other than the adviser or its related person.[92] Reconciliation of custodial records to depositories is a key control objective of the internal control report, which will report on, among other things, tests of controls designed to meet this specific objective.[93] Internal control reports regarding custody, such as Type II SAS 70 reports, however, may not necessarily include specific procedures performed by the accountant that are designed to verify the reconciliation of funds and securities of unaffiliated custodians. Verification with unaffiliated custodians serves as a critical check on potential collusion when the adviser or its related person acts as custodian. The accountant preparing the internal control report is in the best position to perform this check because the accountant will have access to the information necessary to verify assets when testing controls over the custodian's reconciliation processes. For this reason, we are requiring this verification to be performed in connection with, and reported in, the internal control report.

As described in our guidance for accountants, the accountant's verification that client funds and securities are reconciled to an unaffiliated custodian (*e.g.,* the Depository Trust Corporation) can be accomplished in one of two ways.[94] The accountant may either obtain direct confirmation, on a test basis, with unaffiliated custodians or perform other procedures designed to verify that the data used in reconciliations performed by the qualified custodian is obtained from unaffilated custodians and is unaltered.[95]

We noted several specific control objectives in the Proposing Release that we suggested might be included in the scope of an internal control report prepared under the proposed rule.[96] Some commenters urged that we establish minimum control objectives that need to be addressed as part of the internal control report as a means of ensuring consistency in practice.[97] In response to these comments, we are identifying certain minimum control objectives within our revised guidance for accountants.

We are not requiring that a specific type of internal control report be provided under the rule as long as the objectives noted above are addressed. This flexibility should permit

[84] Amended rule 206(4)–2(a)(6). An investment adviser subject to this requirement must obtain or receive an initial internal control report within six months of becoming subject to the requirement. *See infra* Section III.B.2. of this Release.

[85] Proposing Release, at Section II.B.2.

[86] *See id.*

[87] For example, accountants for broker-dealers perform a variety of procedures as part of a broker-dealer's financial statement audit and to satisfy related requirements under the Securities Exchange Act of 1934 ("Exchange Act"), including reconciliation procedures required for broker-dealers under the Exchange Act. *See infra* note 95.

[88] SIFMA(AMG) Letter (noting that obtaining such a report is an "industry best practice").

[89] *See* Accounting Release.

[90] Amended rule 206(4)–2(a)(6)(ii)(A).

[91] *See* Accounting Release.

[92] Amended rule 206(4)–2(a)(6)(ii)(B).

[93] *See* Proposing Release at Section II.B.2.

[94] *See* Accounting Release.

[95] In meeting this requirement, the accountant can also incorporate its own work performed pursuant to other regulatory requirements, such as requirements under the Exchange Act. Under rule 17a–13 under the Exchange Act, most brokers and dealers are required to conduct a securities count at least once each calendar quarter, which includes, among other things, a physical examination and count of all securities held, verification (through confirmation or other form of outside documentation) of all securities deposited or otherwise subject to the broker-dealer's control or direction, and reconciliation of the results of such count and verification to the broker-dealer's records. Under rule 17a–5, the broker-dealer's independent accountant provides a supplemental report on internal control which addresses, among other things, the broker-dealer's compliance with rule 17a–13. *See* Rules 17a–13 and 17a–5 under the Exchange Act [17 CFR Parts 240.17a–13 and 17a–5].

[96] *See* Proposing Release, at Section II.B.2.

[97] *See, e.g.,* AICPA Letter; Deloitte Letter.

accountants of qualified custodians to leverage audit work they have performed to satisfy existing regulatory requirements to which these custodians are subject, or work currently performed as part of internal control reports prepared to meet client demand. In the Proposing Release, we indicated that a Type II SAS 70 report would be sufficient to satisfy the requirements of the internal control report.[98] As we noted in our guidance for accountants, a report issued in connection with an examination of internal control conducted in accordance with AT Section 601, *Compliance Attestation* ("AT 601") under the standards of the American Institute of Certified Public Accountants [99] would also be sufficient, provided that such examination meets the objectives set forth in our guidance.[100]

2. Related Persons

We are amending rule 206(4)–2, as proposed, to provide that an adviser has custody of any client securities or funds that are directly or indirectly held by a "related person" in connection with advisory services provided by the adviser to its clients.[101] A related person is defined by the rule as a person directly or indirectly controlling or controlled by the adviser and any person under common control with the adviser.[102] We received some support for this proposal.[103] Several commenters urged us to instead adopt the approach our staff has taken in no-action letters in which the staff expressed the view that custody of client assets by a related person would not be attributed to the adviser if the related person was operationally separate.[104] Those letters expressed our staff's views regarding the scope of the custody rule which, at that time, did not explicitly address the applicability of the rule to an entity related to the adviser as parent company, sister company or wholly-owned subsidiary that holds or has access to client assets.[105] We believe that the authority or influence an adviser may have over such related persons presents sufficient risks as a result of a related person's ability to obtain client assets, that we should treat the adviser itself as having custody over the client assets.[106] Therefore, we are adopting the amendment as proposed.[107]

We are, however, addressing commenters' concerns in a different way by providing a limited exception from the surprise examination requirements in circumstances when the adviser is deemed to have custody solely as a result of a related person having custody.[108] The exception is available to an adviser that is (i) deemed to have custody solely as a result of certain of its related persons holding client assets, and (ii) "operationally independent" of the custodian.[109]

As discussed above, a key premise of our approach to the custody rule is that client assets may be at greater risk when they are maintained by a related person of the investment adviser. As commenters suggested, however, firms under common ownership that are operationally independent of each other present substantially lower client custodial risks than those that are not because misuse of client assets would tend to require collusion among employees, not significantly different than would be necessary to engage in similar misconduct between unaffiliated organizations.[110]

Under the amended rule, a related person that holds, or has authority to obtain possession of, advisory client assets would be presumed not to be operationally independent of the adviser unless the adviser can meet the rule's conditions, which are similar to the factors that our staff has used to evaluate whether an adviser has custody of client funds and securities indirectly under the rule as a consequence of the custody of a related person,[111] and no other circumstances exist that can reasonably be expected to compromise the operational independence of the related person.[112] An adviser that is able to satisfy these conditions and overcome the presumption that it is not operationally independent of its related person would not have to obtain a surprise examination of client assets held by a related person, including a related person that is a qualified custodian. The adviser would, however, have to comply with the other provisions of the rule (unless an exception is available), including notifying the client where the assets are maintained, forming a reasonable belief after due inquiry that the qualified custodian sends the client account statements, and obtaining an internal control report from a related person that is a qualified custodian.[113] We believe that the conditions set out in the rule appropriately accomplish our objective of identifying advisers that are not operationally independent and thus present sufficient custodial risks that

[98] *See* Proposing Release, at Section II.B.2.

[99] AT 601 provides guidance to accountants for engagements related to either a firm's compliance with the requirements of particular laws or rules, or the effectiveness of the firm's internal controls over compliance with those particular requirements.

[100] We have made technical changes to the description of the internal control report in amended rule 206(4)–2(a)(6)(ii)(A) to reflect that our adopted rule permits use of internal control reports other than the Type II SAS 70.

[101] Amended rule 206(4)–2(d)(2) (defining "custody").

[102] Amended rule 206(4)–2(d)(7). For advisers that are part of multi-service financial organizations, for example, such related person custodians may include broker-dealers and banks.

[103] *See* CFA Institute Letter; Cornell Letter; FPA Letter; NAAIM Letter.

[104] *See, e.g.,* IAA Letter; Mellon Letter; MMI Letter; NRS Letter; Pershing Letter. Several other commenters suggested similar approaches, including revising the definition of custody based on the factors the staff considered in these no-action letters (T. Rowe Letter), and not considering firms under common control to be deemed related persons under the rule (IAA Letter; Pickard Letter; Schnase Letter; SIFMA(PCLC) Letter). We are not adopting either of these approaches for the same reasons as explained above.

[105] *See, e.g., Crocker Investment Management Corp.,* SEC Staff Letter (Apr. 14, 1978) ("*Crocker*").

[106] *See* Proposing Release, Section II.B.1. We note that under rule 206(4)–2, as amended, only client assets held by a related person "in connection with advisory services" provided by the adviser would be attributable to the adviser. *See* rule 206(4)–2(d)(2). Consequently, an adviser will not be deemed to have custody of client assets held with a qualified custodian that is a related person of the adviser if the adviser does not provide advice with respect to such assets.

[107] Amended rule 206(4)–2. In light of our amended definition of custody, our staff is withdrawing several no-action letters to the extent such letters are inconsistent with this definition, including *Crocker* and *Pictet et Cie,* SEC Staff Letter (Jun. 22, 1980). Advisers, including those firms that have relied on these letters in the past, must comply with the amended rule.

[108] Amended rule 206(4)–2(b)(6).

[109] *Id.*

[110] MMI Letter; Davis Polk Letter. This conclusion is implicit in our staff's no-action letter upon which the staff has relied to determine whether an adviser indirectly has custody of client assets when its related person does. *See Crocker, supra* note 105.

[111] Amended rule 206(4)–2(d)(5) (defining "operationally independent"). The conditions set out in the rule are: (i) Client assets in the custody of the related person are not subject to claims of the adviser's creditors; (ii) advisory personnel do not have custody or possession of, or direct or indirect access to client assets of which the related person has custody, or the power to control the disposition of such client assets to third parties for the benefit of the adviser or its related persons, or otherwise have the opportunity to misappropriate such client assets; (iii) advisory personnel and personnel of the related person who have access to advisory client assets are not under common supervision; and (iv) advisory personnel do not hold any position with the related person or share premises with the related person. We would not consider a related person that shared management persons with the adviser, including an owner that was actively involved in the management of the two firms, to be operationally independent.

[112] For example, the management of the adviser and related person could be controlled by persons with close familial relationships such as spouses, siblings, or parents and adult children.

[113] We believe these safeguards remain important because even when an adviser has demonstrated that a related person is operationally independent, the risks to client assets raised by common control may be greater than if client assets were maintained by an independent custodian.

the adviser should be subject to a surprise examination.

We emphasize that an adviser that has custody due to reasons in addition to, or other than, a related person having custody cannot rebut the presumption contained in the rule. Thus, for example, an adviser that has custody because it serves as a trustee with respect to client assets held in an account at a broker-dealer that is a related person could not rely on the exception from the surprise examination on the grounds that the broker-dealer was operationally independent and that the factors discussed above were met.[114] Such an adviser would be subject to the surprise examination requirement *and* would have to receive an internal control report from the related person qualified custodian.[115] We are also amending rule 204–2 to require an adviser whose client assets are held by a related person but does not undergo a surprise examination to make and keep a memorandum describing the relationship with the related person in connection with advisory services the adviser provides to clients and including an explanation of the adviser's basis for determining that it has overcome the presumption that it is not operationally independent of the related person with respect to the related person's custody of client assets.[116]

3. PCAOB Registration and Inspection

Under the amendments, the surprise examination and internal control report required when the adviser or its related person serves as qualified custodian for client assets may be satisfied only when performed or prepared by an independent public accountant that is registered with, and subject to regular inspection by, the PCAOB.[117] We have greater confidence in the quality of the surprise examination and the internal control report when prepared by an independent public accountant that is registered with, and subject to regular inspection by, the PCAOB.

Many commenters supported this requirement, agreeing with us that PCAOB registration would provide an important quality check on the independent accountants performing these services.[118] Two of those commenters asserted that PCAOB registration would serve to discourage accounting fraud in the higher risk situation posed by an adviser or its related person maintaining client assets.[119] Commenters opposing the requirement expressed concern that the PCAOB's authority is limited to inspecting accountants with respect to audits of public issuers, which does not include the surprise examinations and internal control reports meeting the requirements of rule 206(4)–2.[120] One commenter urged us to exempt offshore advisers from this requirement, asserting that some foreign countries do not have enough accountants registered with the PCAOB to support a competitive marketplace for their services.[121]

We acknowledge that the PCAOB does not currently inspect auditor engagements required solely as a result of rule 206(4)–2. We nonetheless believe a requirement that excludes accountants that are not registered with and examined by the PCAOB will provide greater confidence in the quality of the independent public accountant and complement the enhanced controls under the rule that apply when client assets are not maintained by an independent qualified custodian and in audits of certain pooled investment vehicles.[122] While PCAOB inspection is focused on public company audit engagements, we believe that requiring that the accountant not only be registered with the PCAOB but subject to its inspection can provide indirect benefits regarding the quality of the accountant's other engagements.

We recognize that there may be fewer PCAOB-registered and inspected independent public accountants in certain foreign jurisdictions. Based on discussions with accounting firms, however, we do not expect advisers will have significant difficulty in finding a local auditor that is eligible under the rule. Many PCAOB-registered independent public accountants currently have practices in those jurisdictions in which most offshore advisers and funds are domiciled.[123] In addition, some accounting firms have international practices, which may ameliorate concerns regarding offshore availability. Finally, we will continue to monitor the situation as the rule is implemented and consider any issues that may arise.

D. Liquidation Audit

As proposed, the amended rule requires that advisers to pooled investment vehicles that distribute the pool's audited financial statements to investors under the rule's annual audit provision must, in addition to obtaining an annual audit, obtain a final audit of the pool's financial statements upon liquidation of the pool and distribute the financial statements to pool investors promptly after the completion of the audit.[124] This amendment is designed to assure that the proceeds of the liquidation are appropriately accounted for so that pool investors can take timely steps to protect their rights.

One commenter thought that liquidation audits should not be required as the costs outweigh the benefits.[125] We disagree. We believe that a liquidation audit is an important control to protect assets at a time they

[114] We have also amended the rule so that the exception from the surprise examination requirement with respect to client assets of advisers that have custody as a result of their ability to deduct advisory fees from client assets applies to such advisers when their client assets are held by a custodian that is not a related person of the adviser as well as when the adviser can rely on amended rule 206(4)–2(b)(6). *See* amended rule 206(4)–2(b)(3). For the reasons described above, when the related person custodian is operationally independent, we do not believe the custodial risks raised warrant the costs of obtaining a surprise examination.

[115] Under the rule, an adviser whose client assets are maintained by a related person qualified custodian that is not operationally independent from the adviser, must obtain a surprise examination of those assets as if it held the assets itself and were required to obtain a surprise examination with respect to those assets. As a result, for example, a broker-dealer that is also a qualified custodian of its client's advisory assets could not avoid obtaining a surprise examination by creating an operationally integrated subsidiary to provide investment advice.

[116] *See* amended rule 204–2(b)(5).

[117] Amended rule 206(4)–2(a)(6). The independent public accountant must be registered with, and subject to regular inspection by, the PCAOB as of the commencement of the professional engagement period, and as of each calendar year-end.

[118] Surprise exam and internal control report—E&Y Letter; NAAIM Letter; internal control report only—CPIC Letter; IAA Letter; Pickard Letter; NASAA Letter; surprise examination only—ABA Letter; Curian Letter; FPA Letter; Turner Letter.

[119] CPIC Letter; FPA Letter.

[120] CAS Letter; CAQ Letter; Chamber of Commerce Letter; FTAM Letter.

[121] ABA Letter.

[122] The PCAOB performs regular inspections with respect to any registered public accounting firm that, during any of the three prior calendar years, issued an audit report with respect to at least one issuer. Under the amended rule, an adviser's use of an independent public accountant that is registered with the PCAOB but not subject to regular inspection would not satisfy the rule's requirements. *See* PCAOB rule 4003.

[123] *See http://www.pcaobus.org/Registration/Registered_Firms_by_Location.pdf.* We also note that our staff has issued a letter indicating that it would not recommend enforcement action to the Commission under section 206(4) of the Advisers Act or rule 206(4)–2 under the Act against offshore advisers to offshore pooled investment vehicles if those advisers did not comply with certain substantive rules under the Advisers Act, including the custody rule. *See ABA Subcommittee on Private Investment Entities,* SEC Staff Letter (Aug. 10, 2006). The amendments we are adopting today do not affect the views of the staff expressed in that letter.

[124] Amended rule 206(4)–2(b)(4). Each such set of audited financial statements must be prepared in accordance with generally accepted accounting principles.

[125] S&K Letter.

may be particularly vulnerable to misappropriation.

E. Pooled Investment Vehicles

The custody rule's application to investment advisers to pooled investment vehicles will change in several aspects as a result of the amendments we are adopting today. Because a detailed discussion of each of these changes appears throughout multiple different sections of this Release, we are providing a centralized summary here.

Under amended rule 206(4)–2, advisers to pooled investment vehicles may be deemed to comply with the surprise verification requirements of the rule by obtaining an audit of the pool and delivering the audited financial statements to pool investors within 120 days of the pool's fiscal year-end.[126] The audit must be conducted by an accounting firm registered with, and subject to regular inspection by, the PCAOB.[127] If the pooled investment vehicle does not distribute audited financial statements to its investors, the adviser must obtain an annual surprise examination and must have a reasonable basis, after due inquiry, for believing that the qualified custodian sends an account statement of the pooled investment vehicle to its investors in order to comply with the custody rule.[128] The rule requires the accounting firm performing the surprise examination to verify privately offered securities, along with other funds and securities, held by a pool that is not subject to a financial statement audit.[129] Regardless of whether an adviser to a pooled investment vehicle obtains a surprise examination or satisfies that requirement by obtaining an audit, if the pooled investment vehicle's assets are maintained with a qualified custodian that is either the adviser to the pool or a related person of the adviser, the adviser to the pool would have to obtain, or receive from the related person, an internal control report.[130] Finally, the rule requires advisers to pools complying with the rule by distributing audited financial statements to investors to also obtain an audit upon liquidation of the pool when the liquidation occurs prior to the fund's fiscal year-end.[131]

F. Delivery to Related Persons

The Commission is adopting a new provision in rule 206(4)–2 that would preclude advisers from using layers of pooled investment vehicles to avoid meaningful application of the protections of the Rule. Specifically, we are adding a new paragraph (c), which provides that sending an account statement (paragraph (a)(5)) or distributing audited financial statements (paragraph (b)(4)) will not meet the requirements of the rule if all of the investors in a pooled investment vehicle to which the statements are sent are themselves pooled investment vehicles that are related persons of the adviser.

Investment advisers to pooled investment vehicles may from time to time use special purpose vehicles (SPVs) to facilitate investments in certain securities by one or more pooled investment vehicles that the advisers manage. These SPVs are typically established or controlled by the investment adviser or its related persons who often serve as general partners of limited partnerships (or managing members of limited liability companies, or persons who hold comparable positions for another type of pooled investment vehicle). Therefore, a literal application of the rule could result in account statements and financial statements designed to permit investors to protect their interests being sent to the adviser itself, rather than to the parties the rule was designed to protect.[132]

To comply with the rule, as amended, the investment adviser could either treat the SPV as a separate client, in which case the adviser will have custody of the SPV's assets, or treat the SPV's assets as assets of the pooled investment vehicles of which it has custody indirectly. If the adviser treats the SPV as a separate client, rule 206(4)–2 requires the adviser to comply separately with the custody rule's audited financial statement distribution or account statement and surprise examination requirements (*e.g.,* distribute audited financial statements of the SPV pursuant to the requirements of rule 206(4)–2). Accordingly, advisers should distribute the audited financial statements or account statements of the SPV to the beneficial owners of the pooled investment vehicles. If, however, the adviser treats the SPV's assets as assets of the pooled investment vehicles of which it has custody indirectly, such assets must be considered within the scope of the pooled investment vehicle's financial statement audit or surprise examination.

G. Compliance Policies and Procedures

Rule 206(4)–7 under the Advisers Act requires registered investment advisers to adopt and implement written policies and procedures reasonably designed to prevent violations of the Advisers Act and its rules.[133] As we stated in 2003 when we adopted that rule, these policies and procedures must address, among other things, the safeguarding of client assets from conversion or inappropriate use by advisory personnel.[134] We believe that an adviser's maintenance of strong policies and procedures, in addition to the measures we are adopting today, is an essential component of a comprehensive approach to addressing the potential risks raised by an adviser's custody of client assets. We are therefore taking this opportunity to provide guidance regarding the types of policies and procedures relating to safekeeping of client assets that advisers should consider including in their compliance programs.

Compliance with rule 206(4)–7 requires an adviser with custody to adopt controls over access to client assets that are reasonably designed to prevent misappropriation or misuse of client assets, develop systems or procedures to assure prompt detection of any misuse, and take appropriate action if any misuse does occur.[135] Commenters on our Proposing Release suggested several policies and procedures that advisers should consider adopting in order to comply with rule 206(4)–7,[136] many of which we have incorporated into this guidance.

Advisers with custody of client assets should consider the value of instituting the following policies and procedures as part of their compliance programs:[137]

[126] Amended rule 206(4)–2(b)(4). *See supra* note 45.

[127] Amended rule 206(4)–2(b)(4)(ii).

[128] Amended rule 206(4)–2(b)(4).

[129] Section II.B.3. of this Release. Accounting firms that perform surprise examinations under the amended rule are required to report material deficiencies to our staff and also report on Form ADV–E the termination of an engagement as well as the results of the surprise examination.

[130] *See* paragraphs (a)(6), and (b)(4) of amended rule 206(4)–2. This applies only where the use of a qualified custodian is required by the rule.

[131] Amended rule 206(4)–2(b)(4)(iii).

[132] In certain circumstances, the use of SPVs could constitute a violation of section 208(d) of the Act, which prohibits an investment adviser, "indirectly, or through or by any other person, to do any act or thing which it would be unlawful for such person to do directly under" the Act or any of our rules.

[133] 17 CFR 275.206(4)–7.

[134] *Compliance Programs of Investment Companies and Investment Advisers,* Investment Advisers Act Release No. 2204 (Dec. 17, 2003) [68 FR 74714 (Dec. 24, 2003)] ("Compliance Rule Release"), at Section II.A.1.

[135] *See id.*

[136] *See, e.g.,* Comment letter of Investment Adviser Association (March 6, 2009); CPIC Letter.

[137] In addition to these policies and procedures, an adviser should consider: (i) Policies and procedures to establish that it has a basis for its reasonable belief that qualified custodians send account statements to advisory clients; and (ii) if the adviser has overcome the presumption that it

• Conducting background and credit checks on employees of the investment adviser who will have access (or could acquire access) to client assets to determine whether it would be appropriate for those employees to have such access;

• Requiring the authorization of more than one employee before the movement of assets within, and withdrawals or transfers from, a client's account, as well as before changes to account ownership information;

• Limiting the number of employees who are permitted to interact with custodians with respect to client assets and rotating them on a periodic basis; and

• If the adviser also serves as a qualified custodian for client assets, segregating the duties of its advisory personnel from those of custodial personnel to make it difficult for any one person to misuse client assets without being detected.[138]

Advisers should consider including in their policies and procedures a requirement that any problems be brought to the immediate attention of the management of the adviser. Advisers also should consider developing policies regarding the ability of individual employees to acquire custody of client assets, because their custody may be attributable to the firm, which will thereby acquire responsibility for those assets under the rule. Many firms preclude employees from acquiring custody by prohibiting them from, for example, becoming trustees for client assets or obtaining powers of attorney for clients separate and apart from the advisory firm.[139] Advisers that permit employees to serve in capacities whereby the firm acquires custody of client assets should take steps to assure themselves that their employees' custodial practices conform to the firm's policies and procedures, and that the adviser's chief compliance officer ("CCO") has access to sufficient information to enforce those policies and procedures.

The adviser's custody of client assets presents elevated compliance risks for the adviser and its clients. Advisers and their CCOs therefore must accord these risks appropriate attention in the adviser's compliance program. Accordingly, the adviser should consider developing procedures by which the CCO periodically tests the effectiveness of the firm's controls over the safekeeping of client assets. For example, the CCO could periodically test the reconciliation of account statements prepared by advisers with account statements as reported by qualified custodians. In addition, the CCO could compare, on a sample basis, client addresses obtained from the clients' qualified custodians to which the custodian sends client statements, with client addresses maintained by the adviser, to look for inconsistencies or patterns that suggest possible manipulation of address information as a means for concealing misappropriation from these accounts by advisory personnel.

Advisers that have custody as a result of their authority to deduct advisory fees directly from client accounts held at a qualified custodian should have policies and procedures in place that address the risk that the adviser or its personnel could deduct fees to which the adviser is not entitled under the terms of the advisory contract, which would violate the contract and which may constitute fraud under the Advisers Act. The adviser's policies and procedures should take into account how and when clients will be billed; be reasonably designed to ensure that the amount of assets under management on which the fee is billed is accurate and has been reconciled with the assets under management reflected on statements of the client's qualified custodian; and be reasonably designed to ensure that clients are billed accurately in accordance with the terms of their advisory contracts.[140] Examples of policies and procedures such an adviser should consider include:[141]

• Periodic testing on a sample basis of fee calculations for client accounts to determine their accuracy;

• Testing of the overall reasonableness of the amount of fees deducted from all client accounts for a period of time based on the adviser's aggregate assets under management; and

• Segregating duties between those personnel responsible for processing billing invoices or listings of fees due from clients that are provided to and used by custodians to deduct fees from clients' accounts and those personnel responsible for reviewing the invoices and listings for accuracy, as well as the employees responsible for reconciling those invoices and listings with deposits of advisory fees by the custodians into the adviser's proprietary bank account to confirm that accurate fee amounts were deducted.

Because different controls may be appropriate for different advisers in designing effective compliance programs, we are not suggesting a single set of policies and procedures. As we noted in 2003 when we adopted rule 206(4)–7, we recognize that advisers are too varied in their operations and size for such an approach to work.[142] Policies and procedures that are appropriate for a 500 employee firm that also operates as a broker-dealer will be unlikely to work (or be necessary) for a five person firm that provides asset allocation advice. Advisers with only a few employees may, for example, find segregation of duties impractical, but for advisers with a large number of employees such a control may be highly effective. Advisers to pooled investment vehicles should consider whether these practices, or others, should cover investor accounts in the pool, for example, to prevent an employee from misappropriating assets from the pool by processing false investor withdrawals. We have therefore provided the guidance set out above primarily in the form of examples; we expect advisers to tailor their custody policies and procedures to fit both the size and the particular risks that are raised by their business model.

H. Amendments to Form ADV

We are adopting several amendments to Part 1A and Schedule D of Form ADV. The amendments require registered advisers to report to us more

is not operationally independent of its related person under amended rule 206(4)–2(d)(5), policies and procedures reasonably designed to ensure that it continues to overcome the presumption set forth in that provision as long as it continues to rely on the provision. *See supra* Sections II.A and II.C.2. of this Release.

[138] An adviser utilizing a segregation of duties approach should also consider having different personnel authorize custodial transfers from client accounts than those who reconcile client account balances at the adviser with the custodian's records of client transactions and holdings.

[139] When a supervised person of an adviser serves as the executor, conservator or trustee for an estate, conservatorship or personal trust solely because the supervised person has been appointed in these capacities as a result of family or personal relationship with the decedent, beneficiary or grantor (and not as a result of employment with the adviser), we would not view the adviser to have custody of the funds or securities of the estate, conservatorship, or trust. *See* 2003 Adopting Release at n.15.

[140] Our staff has taken the view that, under some arrangements, clients may pay advisory fees deducted directly from assets held in their advisory accounts without causing the adviser to have custody of those assets and being subject to the custody rule. Under these arrangements, a client will instruct its qualified custodian as its agent to determine the amount of the advisory fee and to remit the amount of the fee to the adviser. Our staff therefore takes the view, under these circumstances, that the adviser has no access to the client's funds or securities. *See* Staff Responses to Questions About Amended Custody Rule, at Section III. Fee Deduction, Question III.3, available at *http://www.sec.gov/divisions/investment/custody_faq.htm.*

[141] Some of these suggestions came from commenters. *See, e.g.,* CPIC Letter.

[142] Compliance Rule Release, at Section II.A.1.

detailed information about their custody practices in their registration form and to update the information. The information will enhance our ability to identify compliance risks associated with custody of client assets.[143] The amendments primarily affect only those advisers that have custody of client assets under rule 206(4)–2.

Item 7. We are adopting the amendments to Item 7 and Section 7.A. of Schedule D that we proposed to require each adviser to report *all* related persons who are broker-dealers and to identify which, if any, serve as qualified custodians with respect to the adviser's clients' funds or securities.[144] We did not receive comments on these proposed amendments. We also are amending Section 7.A. of Schedule D to require an adviser to report whether it has determined that it has overcome the presumption that it is not operationally independent from a related person broker-dealer qualified custodian, and thus is not required to obtain a surprise examination for the clients' assets maintained at that custodian.

Item 9. We are adopting amendments to Item 9 to require each registered adviser to report to us: (i) Whether the adviser or a related person has custody of client assets, and if so, both the total U.S. dollar amount of those assets as well as the number of clients for whose accounts the adviser or its related person has custody;[145] (ii) if the adviser, or a related person, acts as an adviser to a pooled investment vehicle, whether (a) the pool is audited, and (b) the qualified custodians send account statements to pool investors;[146] (iii) whether an independent public accountant conducts an annual surprise examination of client assets;[147] and (iv) whether an independent public accountant prepares an internal control report with respect to the adviser or its related person;[148] and (v) whether the adviser or a related person serves as qualified custodian for the adviser's clients.[149] In addition, we are amending Schedule D to require that advisers (i) identify and provide certain information about the accountants that perform audits or surprise examinations and that prepare internal control reports;[150] and (ii) to identify related persons, such as banks, that serve as qualified custodians with respect to their clients' funds or securities, but are not otherwise reported in Item 7. We also are amending Schedule D to require an adviser to report whether it has determined that it has overcome the presumption that it is not operationally independent from a related person qualified custodian, and thus is not required to obtain a surprise examination for the clients' assets maintained at that custodian.[151]

Several commenters generally supported these amendments to Form ADV, and many requested clarification or modification to parts of the form.[152] In response to several commenters' requests for clarification or modification of Item 9,[153] we have added an instruction to clarify that an adviser must separately report the amount of assets of which it has custody, excluding those assets maintained by a related person qualified custodian, and the amount of assets of which a related person has custody, including when the related person serves as a qualified custodian.[154]

I. Amendments to Form ADV–E

We are adopting, as proposed, three amendments to the instructions to Form ADV–E. First, we have amended the form instructions to require that the form and the accompanying accountant's examination certificate be filed electronically with the Commission through the IARD.[155] Advisers will, however, continue to file form ADV on paper until the IARD system begins accepting electronic filings of Form ADV–E, which we expect to occur sometime in late 2010. Investment advisers will be notified at that time. The second and third amendments we are adopting conform Form ADV–E instructions to amended rule 206(4)–(2), which, as discussed above, requires that (i) the surprise examination certificate must be filed within 120 days of the time chosen by the accountant for the surprise examination,[156] and (ii) a termination statement be filed by an accountant within four business days of its resignation, dismissal, or removal.[157]

J. Required Records

We also are adopting amendments, as proposed, to rule 204–2 to require an adviser to maintain a copy of (i) the internal control report that such adviser is required to obtain or receive from its related person, pursuant to amended rule 206(4)–2(a)(6), and (ii) the memorandum describing the basis upon which the adviser determined that the presumption that any related person is not operationally independent, pursuant to amended rule 206(4)–2(d)(5), has

[143] These revisions respond in part to concerns raised by the Government Accountability Office in its August 2007 report on our examination program, which concluded that our examination staff should continue to assess and refine the risk algorithm to enhance the risk assessment process, which would include the identification and collection of additional data through Form ADV. *See* United States Government Accountability Office, *Securities and Exchange Commission; Steps Being Taken to Make Examination Program More Risk-Based and Transparent* (August 2007), available at *http://www.gao.gov/new.items/d071053.pdf.*

[144] The item had required an adviser to identify on Schedule D of Form ADV each related person that is an investment adviser, but made reporting of the names of related person broker-dealers optional.

[145] Items 9.A. and 9.B of Part 1A of Form ADV.

[146] Item 9.C.(1) and (2) of Part 1A of Form ADV.

[147] Item 9.C.(3) of Part 1A of Form ADV.

[148] Item 9.C.(4) of Part 1A of Form ADV. Two commenters suggested that we eliminate the requirements in Item 9.C. that require an adviser to disclose the actions taken by the adviser's qualified custodian and accountant pursuant to the proposed custody rule (as well as corresponding portions of Schedule D), stating that advisers cannot guarantee third-party actions and that reporting compliance with aspects of the custody rule is an inappropriate use of Form ADV. *See* IAA Letter; MMI Letter. These items do not require an adviser to guarantee actions of third parties, but merely require the adviser to report on obligations it has (*e.g.,* to form a reasonable belief) under the revised custody rule, which if not met would result in the adviser's violation of the rule.

[149] Item 9.D. of Part 1A of Form ADV.

[150] In addition to providing the accountant's name and address, advisers must indicate whether the accountant is registered with and subject to regular inspection by the PCAOB. Advisers must also indicate whether the accountant's report contained an unqualified opinion. Section 9.C. of Schedule D to Part 1A of Form ADV. One commenter stated that we should not require advisers to report whether the accountants they, or their related persons, engage are registered with and subject to inspection by the PCAOB because this information is readily available on the PCAOB's Web site. *See* AICPA Letter. An adviser, or related person custodian, would have to collect this information in the course of retaining an accountant to perform the necessary engagements to comply with the revised custody rule, and we expect that accountants would make these representations to their clients. As a result, reporting this information should not be burdensome to advisers.

[151] Section 9.D. of Schedule D to Part 1A of Form ADV.

[152] Cornell Letter; IAA Letter; MMI Letter; NRS Letter; Turner Letter.

[153] IAA Letter; NSCP Letter; ASG Letter; CAS Letter.

[154] We also are revising an existing instruction to Item 9.A. to specify that in addition to advisers that have custody only because they have authority to deduct fees that if they also have custody because a related person maintains client assets but the adviser has overcome the presumption of not being operationally independent they may continue to answer "no" to Item 9.A. Advisers must report information about these custody arrangements in Item 9.B.

It will be several months before FINRA, which operates the IARD for us, completes reprogramming the IARD to implement this change to Item 9. In the interim, advisers registered with the Commission should provide responses following the amended instruction.

[155] Instruction 3(a) to Form ADV–E. Several comments supported electronic filing and the amendments to Form ADV–E generally. *See* Cornell Letter; IAA Letter; Turner Letter.

[156] Instruction 3(i) to Form ADV–E.

[157] Instruction 3(ii) to Form ADV–E. Commenters suggested that we revise the timing of the filing and that we do not make the filing available to the public. We have addressed these comments in Section II.B.2 of this Release. *See supra* notes 54 and 57 and accompanying text.

been overcome, for five years from the end of the fiscal year in which, as applicable, the internal control report or memorandum is finalized. Requiring an adviser to retain a copy of these items will provide our examiners with important information about the safeguards in place at an adviser or related person that maintains client assets. Information from these records will also assist our staff in assessing custody-related risks at a particular adviser.

III. Effective and Compliance Dates

A. Effective Date

The effective date of the amendments to rules 206(4)–2, 204–2, and Forms ADV and ADV–E is March 12, 2010.

B. Compliance Dates and Related Rule Amendments

Advisers registered with us must comply with amended rules 206(4)–2, 204–2, and Forms ADV and ADV–E, as amended, on and after March 12, 2010, the effective date of these amendments, except as described below. Immediately upon the effective date advisers that have custody of client assets must promptly upon opening a custodial account on a client's behalf, and following any changes to the custodial account information, as specified in rule 206(4)–2(a)(2) send a notification to the client, including a legend urging the client to compare the account statements the client receives from the custodian with those the client receives from the adviser. Such legend should also be included in any account statements that advisers send to these clients after they are required to send the notification discussed above. In addition, immediately upon the effective date, each adviser that has custody of client assets must have a reasonable belief (except with respect to pooled investment vehicles the financial statements of which are audited and delivered to investors) that a qualified custodian sends account statements directly to clients at least quarterly, in accordance with rule 206(4)–2(a)(3). We believe 60 days is sufficient for advisers to comply with the amended rule regarding the three requirements described above because they are modifications to the existing rule requirements.

Compliance dates for other provisions of amended rules 206(4)–2, 204–2, and Forms ADV and ADV–E are described below.[158]

1. Surprise Examinations

An investment adviser required to obtain a surprise examination must enter into a written agreement with an independent public accountant that provides that the first examination will take place by December 31, 2010 or, for advisers that become subject to the rule after the effective date, within six months of becoming subject to the requirement.[159] If the adviser itself maintains client assets as qualified custodian, however, the agreement must provide for the first surprise examination to occur no later than six months after obtaining the internal control report.[160] We believe these compliance dates will provide sufficient time for an adviser to hire an independent public accountant for purposes of the surprise examination and for the accountant to perform the surprise examination.

2. Internal Control Reports

An investment adviser also required to obtain or receive an internal control report because it or a related person maintains client assets as a qualified custodian must obtain or receive an internal control report within six months of becoming subject to the requirement. As noted above, an adviser obtaining an internal control report because it (rather than a related person) also serves as a qualified custodian of its clients' assets (*e.g.,* a broker-dealer) need not undergo a surprise examination until six months after obtaining the internal control report.

3. Audits of Pooled Investment Vehicles

An investment adviser to a pooled investment vehicle may rely on the annual audit provision if the adviser (or a related person) becomes contractually obligated to obtain an audit of the financial statements of the pooled investment vehicle for fiscal years beginning on or after January 1, 2010 by an independent public accountant registered with, and subject to regular inspection by, the PCAOB.

4. Forms ADV and ADV–E

Investment advisers registered with us must provide responses to the revised Form ADV in their first annual amendment after January 1, 2011.[161] Until the IARD system is upgraded to accept Form ADV–E, accountants performing surprise examinations should continue paper filing of Form ADV–E. Investment advisers will be notified as soon as the IARD system can accept filings of Form ADV–E.[162]

IV. Paperwork Reduction Act

Certain provisions of rule 206(4)–2, Form ADV, and Form ADV–E that we are amending today contain "collection of information" requirements within the meaning of the Paperwork Reduction Act of 1995 ("PRA").[163] In the Proposing Release, the Commission published notice soliciting comment on the collection of information requirements. The Commission submitted the collection of information requirements to the Office of Management and Budget ("OMB") for review in accordance with 44 U.S.C. 3507(d) and 5 CFR 1320.11 under control numbers 3235–0241, 3235–0049, and 3235–0361, respectively. The titles for the collections of information are "Rule 206(4)–2, Custody of Funds or Securities of Clients by Investment Advisers," "Form ADV," and "Form ADV–E, cover sheet for each certificate of accounting of client securities and funds in the custody of an investment adviser," under the Advisers Act.[164] An

[158] Some commenters requested that we delay the compliance date by 12–24 months from the effective date of the rule. *See* Curian Letter; CAQ Letter; Dechert Letter; Deloitte Letter; E&Y Letter; KPMG Letter; PWC Letter. In determining the compliance dates for the amended rules and forms, we balanced the urgency of enhancing investor protection afforded under the Advisers Act, the need to provide sufficient time for advisers to comply with the requirements under the amended rules, and the extent of changes we made from the proposal on which the commenters' requests were based.

[159] An adviser could first become subject to the surprise examination requirement by, for example, registering with the Commission or accepting custody of a client's assets.

[160] An independent public accountant conducting a surprise examination on an adviser that also serves as the qualified custodian for its clients (*i.e.,* self custody) would have to verify the existence of client assets with the adviser itself. Because of the added assurance of having an internal control report, we believe that investors would be better served if the first round of surprise examinations is conducted with the benefit of the internal control report. An adviser with multiple related persons that serve as qualified custodians must undergo a surprise examination within six months of receiving the last internal control report it is required to receive.

[161] Based on discussions with our contractor, we anticipate that IARD will reflect the changes to Form ADV we are adopting today and accept electronic filing of Form ADV–E in the fourth quarter of 2010. Form ADV–Es filed with us on paper before electronic filing will be available upon request through the Commission's Public Reference Room, 100 F Street, NE., Washington, DC 20549.

[162] We urge advisers in the meantime to confirm that their email contact information on Form ADV is correct and to update the information promptly if necessary.

[163] 44 U.S.C. 3501.

[164] We also are adopting amendments to rule 204–2 that require approximately 337 advisers to maintain the internal control reports they obtain, or receive from related persons, and if these advisers have determined that the presumption that a related person is operationally independent has been overcome, a memorandum describing the basis upon which that determination was made. In addition, rule 204–2(a)(10) already requires an adviser to maintain all written agreements relating to its business as such, which would require an

Continued

agency may not sponsor, or conduct, and a person is not required to respond to, a collection of information unless it displays a currently valid OMB control number.

The collections of information under rule 206(4)–2 are necessary to ensure that clients' funds and securities in the custody of advisers are safeguarded, and information contained in the collections is used by staff of the Commission in its enforcement, regulatory, and examination programs. The respondents are investment advisers registered with us that have custody of client funds and securities ("client assets"). The collections of information under Form ADV are necessary for use by staff of the Commission in its examination and oversight program, and some advisory clients also may find them useful. The respondents are investment advisers seeking to register with the Commission or to update their registrations. The collections of information under Form ADV–E are necessary for use by staff of the Commission in its examination and oversight program, and some advisory clients also may find them useful. The respondents are investment advisers registered with us that have custody of client assets and are subject to an annual surprise examination requirement under rule 206(4)–2. All responses required by the rule are mandatory. With the exception of an accountant's notification of any material discrepancies identified in a surprise examination pursuant to rule 206(4)–2(a)(4)(ii), responses provided to the Commission are not kept confidential.

A. Rule 206(4)–2

The Commission is adopting amendments to the custody rule under the Advisers Act. The amendments are designed to provide additional safeguards under the Advisers Act when a registered adviser has custody of client funds or securities by requiring such an adviser, among other things: (i) To undergo an annual surprise examination by an independent public accountant to verify client assets; (ii) to have a reasonable basis after due inquiry, for believing that the qualified custodian maintaining client funds and securities sends account statements directly to the advisory clients; and (iii) unless client assets are maintained by an independent custodian (*i.e.,* a custodian that is not the adviser itself or a related person) to obtain or receive a report of the internal controls relating to the custody of those assets from an independent public accountant that is registered with and subject to regular inspection by the PCAOB.

The amendments to rule 206(4)–2 that we are adopting today differ from our proposed amendments in three respects that affect our Paperwork Reduction Act analysis. First, we are providing an exception to the surprise examination requirement for advisers that have custody because they have authority to deduct advisory fees from client accounts and advisers that have custody solely because a related person holds the adviser's client assets and the related person is operationally independent of the adviser.[165] Second, advisers to pooled investment vehicles that are subject to an annual audit and that distribute audited financial statements to investors in the pools are deemed to comply with the surprise examination requirement as long as the accountant performing the annual audit is registered with, and subject to regular inspection by, the PCAOB.[166] Third, if an adviser sends account statements to its clients, it must not only insert a legend in the required notice to clients upon opening accounts on their behalf, but must also insert the legend in subsequent account statements sent to those clients urging the client to compare the account statements from the custodian with those from the adviser.[167]

We requested comment on the Paperwork Reduction Act analysis contained in the Proposing Release. A number of commenters expressed concerns that the paperwork burdens associated with our proposed amendments to rule 206(4)–2 were understated.[168] In response to these comments as well as the differences in the amendments we are adopting from those we proposed, as described above, and the guidance for accountants published in a companion release,[169] we have adjusted our Paperwork Reduction Act estimates as discussed below.

Annual surprise examination. The current approved annual burden for rule 206(4)–2 is 415,303 hours, 21,803 of which relate to the requirement to obtain a surprise examination and the delivery of quarterly account statements by the adviser. We estimated in the Proposing Release that 9,575 advisers registered with the Commission would be subject to the surprise examination.[170] As noted above, the amended rule we are adopting today excludes certain advisers with custody from the requirement to undergo an annual surprise examination and deems certain advisers to audited pooled investment vehicles to have complied with the requirement.[171] Advisers that have custody for other reasons, however, such as because they or their related person serves as the qualified custodian for client assets, or because they serve as the trustee of a client trust, must undergo an annual surprise examination.[172] As a result, we now estimate that 1,859 advisers will be subject to the surprise examination requirement under the amended rule 206(4)–2.[173]

adviser to maintain the written agreement concerning the surprise examination required by the amended rule. The current approved collection of information burden for rule 204–2 is 1,945,109 hours and has an estimated cost of $13,551,390 under OMB control number 3235–0278. The two new retention requirements and the additional written agreements that will be maintained as a result of more surprise examinations will result in a negligible increase to the currently approved burden for rule 204–2.

[165] Amended rule 206(4)–2(b)(3) and amended rule 206(4)–2(b)(6).

[166] Amended rule 206(4)–2(b)(4).

[167] Amended rule 206(4)–2(a)(2).

[168] *See, e.g.,* ASG Letter; MMI Letter; Schwab Letter. These commenters did not provide empirical data that is relevant to our estimates of burden hours in this Paperwork Reduction Act analysis, but did provide cost estimates that we have considered in Section V of this Release.

[169] *See* Accounting Release.

[170] Based on Form ADVs filed as of February 2009. *See* the Proposing Release at n.77 for explanation of our estimate.

[171] Amended rule 206(4)–2(b)(3) (exception from surprise examination for advisers that have custody because they have authority to deduct fees from client accounts) and amended rule 206(4)–2(b)(4)(deems advisers to audited pooled investment vehicles that distribute audited financial statements to pool investors to comply with the surprise examination requirement if the audit is conducted by a public accountant registered with, and subject to regular inspection by, the PCAOB). *See supra* Section II.B.1 of this Release.

[172] Under amended rule 206(4)–2 an adviser has custody if its related person has custody of its client assets. Amended rule 206(4)–2(d)(2). A related person is defined as a person directly or indirectly controlling or controlled by the adviser, and any person under common control with the adviser. Amended rule 206(4)–2(d)(7).

[173] Based on Form ADVs filed as of November 2, 2009 (unless indicated otherwise, all data we use in this release were as of November 2, 2009), there were 3,689 advisers that answered "yes" to Form ADV, Part 1A Items 9.A or 9.B (indicating that they or a related person has custody of client assets. This excludes advisers that have custody solely because they have authority to deduct fees from clients' accounts). We exclude from this number (i) 38 of these advisers that only have clients that are investment companies (Item 5.D(4)); (ii) 703 (or 90%, which is based on staff observation that the vast majority of pooled investment vehicles are subject to an annual audit) of the 781 of these advisers that only have clients that are pooled investment vehicles (Items 5.D(6) or 5.D(4)); (iii) 1,030 (or 80%) of the 1,288 advisers that have some clients that are pooled investment vehicles (10% of which is based on the number of advisers (from IARD data) that have both pooled investment vehicle clients and non-pooled investment vehicle clients that will not have to undergo a surprise examination because they do not have custody under the rule of the non-pooled investment vehicle client assets that would require a surprise examination and 10% of which is based on an

For purposes of estimating the collection of information burden we have divided the estimated 1,859 advisers into 3 subgroups. First, we estimate that 337 advisers have custody because (i) they serve as qualified custodians for their clients and are also broker-dealers, banks or futures commission merchants,[174] or (ii) they have a related person that serves as qualified custodian for clients in connection with advisory services the adviser provides to the clients.[175] We estimate that these advisers will be subject to an annual surprise examination with respect to 100 percent of their clients (or 2,315 clients per adviser) based on the assumption that all of their clients maintain custodial accounts with the adviser or related person.[176] We estimate that each adviser will spend an average of 0.02 hours for each client to create a client contact list for the independent public accountant. The estimated total annual aggregate burden with respect to the surprise examination requirement for this group of advisers is 15,603 hours.[177]

A second group of advisers, estimated at 1,315,[178] are those that have custody because they have broad authority to access client assets held at an independent qualified custodian, such as through a power of attorney or acting as a trustee for a client's trust. Based on our staff's experience, advisers that have access to client assets through a power of attorney, acting as trustee, or similar legal authority typically do not have access to all of their client accounts, but rather only to a small percentage of their client accounts pursuant to these special arrangements. We estimate that these advisers will be subject to an annual surprise examination with respect to 5 percent of their clients (or 116 clients per adviser) [179] who have these types of arrangements with the adviser. We estimate that each adviser will spend an average of 0.02 hours for each client to create a client contact list for the independent public accountant. The estimated total annual aggregate burden with respect to the surprise examination requirement for this group of advisers is 3,051 hours.[180]

A third group of advisers, estimated at 207,[181] provide advice to pooled investment vehicles that are not undergoing an annual audit, and therefore will be subject to the surprise examination with respect to 100 percent of their pooled investment vehicle clients (which we estimate to be 5 funds and 250 investors per adviser providing advisory services exclusively to pooled investment vehicles, and 2 funds and 100 investors per adviser not providing advisory services exclusively to pooled investment vehicles).[182] We estimate that the advisers to these pooled investment vehicles will spend 1 hour for the pool and 0.02 hours for each investor in the pool to create a contact list for the independent public accountant, for an estimated total annual burden with respect to the surprise examination requirement for these advisers of 1,296 hours.[183] These estimates bring the total annual aggregate burden with respect to the surprise examination requirement for all three groups of advisers to 19,950 hours.[184] This estimate does not include the collection of information discussed below relating to the written agreement required by paragraph (a)(4) of the rule.

Written agreement with accountant. Consistent with the proposal, amended rule 206(4)–2 requires that an adviser subject to the surprise examination requirement must enter into a written agreement with the independent public accountant engaged to conduct the surprise examination and specify certain duties to be performed by the independent public accountant.[185] As stated in the Proposing Release, we believe that written agreements are commonplace and reflect industry practice when a person retains the services of a professional such as an accountant, and they are typically prepared by the independent public accountant in advance. We therefore estimate that each adviser will spend 0.25 hour to add the required provisions to the written agreement, with an aggregate of 465 hours for all advisers subject to surprise examinations.[186] Therefore the total annual burden in connection with the surprise examination is estimated at 20,415 hours under the amended rule.[187]

Audited pooled investment vehicles. The rule currently excepts, and the amended rule continues to except,

estimate of the pooled investment vehicles that are subject to an annual audit). We further estimate that of the 396 advisers we estimate that are currently using related person qualified custodians, 59 (or 15%) will choose to use independent qualified custodians and, as a result, will no longer retain custody of client assets under the rule that would require these advisers to undergo the surprise examination. *See infra* note 282 for explanation of this estimate. (3,689 − 38 − 703 − 1,030 − 59 = 1,859).

[174] We estimate that 91 investment advisers that are also banks, registered broker-dealers or futures commission merchants would custody client assets as a qualified custodian under the rule.

[175] Based on IARD data, we also estimate that 305 investment advisers have a related person bank, registered broker-dealer or futures commission merchant that is a qualified custodian for advisory client assets. 91 (advisers that are also banks or broker-dealers) + 305 (advisers using related persons as custodians) = 396. 396 − 59 (advisers that will stop using related persons as custodians) = 337 (*see supra* note 173 for explanation of 59 advisers removed).

[176] In the Proposing Release, we estimated that each adviser had, on average, 1,092 clients. *See* Proposing Release at n.79. That estimate was based on the average number of clients of all advisers registered with us (excluding the two largest firms). We now base our estimate on IARD data of all the advisers that will be subject to the surprise examination under the amended rule (also excluding these two largest firms). This new estimate excludes from the calculation about 6,000 advisers that have custody solely because of deducting fees, which tend to have fewer clients. As a result the estimated average number of clients for the advisers that will be subject to the surprise examination under the amended rule is increased.

[177] 337 advisers × 2,315 (average number of clients subject to the surprise examination requirement) × 0.02 hour = 15,603 hours. As addressed later, some of these advisers will not have to obtain a surprise examination as a result of the exception to the surprise examination requirement under amended rule 206(4)–2(b)(6) for an adviser that has custody because of its related person's custody of client assets and that can overcome the presumption that it is not operationally independent of the related person custodian. *See infra* note 283. We do not have data or another resource to provide an estimate of the number of advisers that use related person custodians that will be able to overcome the presumption. This estimated annual hour burden may, as a result, overestimate the collection of information requirement as advisers that have overcome the presumption will not have to create client contact lists.

[178] This estimate is based on the total number of advisers subject to surprise examinations less those described above in the first group (custody as a result of serving as, or having related person serving as qualified custodians) and below in the third group (advisers to pooled investment vehicles) 1,859 − 337 − 207 = 1,315. *See infra* note 182 and accompanying text.

[179] Based on the IARD data, we estimate that the average number of clients of advisers subject to the surprise examination requirement is 2,315. (2,315 × 5% = 116).

[180] 1,315 × 116 × 0.02 = 3,051.

[181] Based on IARD data, we estimate that there are 781 advisers that provide advisory services exclusively to pooled investment vehicles. *See supra* note 173. We further estimate, based on our staff's experience, that only ten percent of advisers to pooled investment vehicles will be subject to an annual surprise examination because the pooled investment vehicles they advise do not undergo an annual audit. We further estimate, based upon staff experience, that ten percent of the 1,288 advisers that provide services not exclusively to pooled investment vehicles will be subject to an annual surprise examination because the pooled investment vehicles they advise do not undergo an annual audit. (781 × 10%) + (1,288 × 10%) = 78 + 129 = 207.

[182] The number of funds per adviser is estimated based on the information we collected from Item 5.C. of Form ADV filed by advisers that provide advisory services only to pooled investment vehicles. The estimate of 250 investors per adviser is a staff estimate used in the currently approved collection of information burden.

[183] [(78 × 5) + (78 × 250 × 0.02)] + [(129 × 2) + (129 × 100 × 0.02)] = [390 + 390] + [258 + 258] = 1,296.

[184] 1,296 + 15,603 + 3,051 = 19,950. By contrast, our estimate in the Proposing Release for the surprise examination as proposed was 177,242 hours.

[185] Amended rule 206(4)–2(a)(4).

[186] 1,859 × 0.25 = 465.

[187] 19,950 + 465 = 20,415.

advisers to pooled investment vehicles from having a qualified custodian send quarterly account statements to the investors in a pool if it is audited annually by an independent public accountant and the audited financial statements are distributed to the investors in the pool. The currently approved annual burden in connection with the required distribution of audited financial statements is 393,500 hours.[188] As explained in the Proposing Release, we overestimated the burden for this delivery requirement in the past.[189] The collection of information burden imposed on an adviser relating to the mailing of audited financial statements to each investor in a pool that it manages should be minimal, as the financial statements could be included with account statements or other mailings. We estimate, consistent with the estimate in the proposing release, that the average burden for advisers to mail audited financial statements to investors in the pool is 1 minute per investor.[190] Under our revised estimate of the number of advisers to audited pooled investment vehicles,[191] we estimate that the aggregate annual hour burden in connection with the distribution of audited financial statements is 4,861 hours.[192]

The amended rule requires that an adviser to a pooled investment vehicle that is relying on the annual audit provision must have the pool audited and distribute the audited financial statements to the investors in the pool promptly after completion of the audit if the fund liquidates at a time other than its fiscal year-end. We estimate that 5 percent of pooled investment vehicles are liquidated annually at a time other than their fiscal year-end, which results in an additional burden of 243 hours per year.[193] As a result, the total annual hour burden in connection with the distribution of audited financial statements in connection with annual audit and liquidation audit under the amended rule is estimated to be 5,104 hours.[194]

Notice to clients. The amended rule also requires each adviser, if the adviser sends account statements in addition to those sent by the custodian, to add a legend in its notification to clients upon opening a custodial account on their behalf, and in any subsequent account statements it sends to those clients, urging them to compare the account statements from the qualified custodian to those from the adviser.[195] Although the legend requirement is new, it will be placed in a notification that is currently required to be sent to clients at specified times. We believe that the increase in this collection of information burden, if any, is negligible. We estimate that 80 percent of the 2,986 advisers would be subject to this collection of information,[196] and that each adviser will on average open a new custodial account for 5% of its clients per year, either because the adviser has new clients that request that the adviser open an account on their behalf, or because the adviser selects a new custodian and moves its existing clients' accounts to that custodian. We further estimate that the adviser will spend 10 minutes per client drafting and sending the notice. The total hour burden relating to this requirement is estimated at 41,724 hours per year.[197]

Based on the above estimates, we anticipate that the estimated total information collection burden under amended rule 206(4)–2 would be 67,243 hours.[198] This represents a decrease of 348,060 hours from the currently approved burden,[199] primarily due to our change of methodology in estimating the collection of information with respect to distribution of audited financial statements to investors in pooled investment vehicles.[200]

Annual aggregate cost. The currently approved collection of information for the custody rule includes an aggregate accounting fee of $281,000. Based on the amendments we are adopting today, we estimate a total annual aggregate accounting fee of $122,965,000.[201] The increase in estimated aggregated cost is attributable to an increase in the number of advisers that will be subject to the surprise examination, an increase in the estimated cost for the surprise examination, and the estimated cost for an adviser to obtain, or to receive from its related persons, an internal control report when the adviser or related person serves as qualified custodian for the adviser's clients' assets.

In the Proposing Release, we estimated that advisers subject to the surprise examination would on average pay an accounting fee of $8,100 annually.[202] Many commenters asserted that this estimate was too low.[203] In revising our estimates, we have considered the commenters' estimates,[204] engaged in further discussions with industry participants and accounting firms, including accounting firms that are registered with, and subject to regular inspection by, the PCAOB, and considered the cost implications for the surprise examination of certain aspects of our guidance for accountants that we are issuing today.[205] We now estimate that of the 1,859 advisers subject to the surprise examination requirement, 337 advisers will be subject to the surprise examination with respect to 100 percent of their clients and will each spend an

[188] We estimated that 3,148 advisers to pooled investment vehicles were subject to this information collection under the current rule. We further estimated that each adviser had, on average, 250 investors in the funds it advises, and that each adviser spent 0.5 hours per investor annually for delivering audited financial statements to its 250 investors. $3{,}148 \times 250 \times 0.5 = 393{,}500$.

[189] We previously estimated that an adviser would spend 0.5 hours per investor sending investors audited financial statements. This estimate incorrectly included time for preparation of the audited financial statements, which after the audit should have been readily available to the adviser for distribution.

[190] Proposing Release at n. 94.

[191] Based on IARD data, 2,069 advisers with custody of client assets provided advice to pooled investment vehicles as of November 2, 2009. Of these 2,069 advisers, we estimate that 781 advisers will each on average provide advice to five pooled investment vehicles that have a total of 250 investors. 5 (pools) × 50 (investors) = 250. We estimate that of these 781 advisers, 703 (or 90%) will have their pooled investment vehicles audited and distribute the audited financial statements to the investors in the pool. We further estimate that of the remaining 1,288 advisers, on average, each provides advice to two pooled investment vehicles that have a total of 100 investors. 2 (pools) × 50 (investors) = 100. We estimate that of these 1,288 advisers, 1,159 (or 90%) will have their pooled investment vehicles audited and will distribute the audited financial statements to the investors in the pool.

[192] $[(703 \times 250 \times 1)/60] + [(1{,}159 \times 100 \times 1)/60] = 2{,}929 + 1{,}932 = 4{,}861$.

[193] 4,861 (total burden hours relating to distribution of audited financials) × 0.05 = 243.

[194] 4,861 + 243 = 5,104.

[195] Amended rule 206(4)–2(a)(2).

[196] We understand that advisers having custody solely because of deducting fees do not typically open custodial accounts on behalf of their clients. Excluding those advisers and 703 advisers to audited pooled investment vehicles to which the notice requirement does not apply, we estimate that 2,986 advisers may be subject to this information collection (advisers that answered "yes" to Item 9A. or B. of Part 1A. of Form ADV). *See supra* note 173 and accompanying text. Based on our staff's observation, we further estimate that clients of 80% of these advisers will receive account statements from their advisers in addition to the account statements from the qualified custodian. [0.8 × 2,986 = 2,389].

[197] [(2,986 × 0.8 × 2,096 (average number of clients for the advisers with custody of client assets) × 0.05) × 10]/60 = 41,724 hours.

[198] 20,415 (surprise examination) + 5,104 (distribution of audited financial statements) + 41,724 (notice to clients) = 67,243.

[199] 415,303 − 67,243 = 348,060 hours.

[200] *See supra* note 188 and accompanying text.

[201] *See infra* note 211 and accompanying text.

[202] *See* Proposing Release at n.102 and accompanying text.

[203] *See infra* notes 276 to 278 and accompanying text.

[204] We note that commenters based their cost estimates for surprise examinations on the current guidance for accountants, which requires verification of 100% of client assets. We believe that these estimates would have been significantly lower if they had reflected the modernized procedures for the surprise examination described in the guidance for accountants issued in a companion release. *See* Accounting Release.

[205] *Id.*

average of $125,000 annually,[206] 262 medium sized advisers will be subject to the surprise examination requirement with respect to 5% of their clients and will each spend an average of $20,000 annually, and 1,260 small sized advisers will be subject to the surprise examination requirement with respect to 5% of their clients and will each spend an average of $10,000 annually, with an aggregate annual accounting fee of $59,965,000 for all advisers subject to the surprise examination.[207]

We understand that the cost to prepare an internal control report relating to custody will vary based on the size and services offered by the qualified custodian. We estimated in the Proposing Release that, on average, an internal control report would cost approximately $250,000 per year for each adviser subject to the requirement.[208] We estimate that under amended rule 206(4)–2, 252 advisers will be subject to the requirement of obtaining or receiving an internal control report.[209] Therefore the total cost attributable to this requirement will be $63,000,000.[210] The total estimated accounting fee under the amended rule 206(4)–2 is therefore estimated at $122,965,000.[211]

One-time computer system programming costs. As stated above, the amended rule would require an adviser that has an obligation under the rule to provide a notice to clients upon opening a new account on behalf of the client or changes to such account and that sends account statements to its client to include in the account statement a legend urging the client to compare its account statement with those sent by the qualified custodian. We expect that the requirement would cause advisers that are subject to the notice requirement and that send account statements to clients to reprogram their computer system to include the legend in account statements to clients. We estimate that half of the advisers that are subject to the rule or 1,195 advisers will hire a computer programmer to modify their computer system to automatically add the legend to client account statements at an average cost of $1,000 each.[212] We believe the other half routinely use off-the-shelf software to provide client account statements and will bear little or no direct costs because we expect the software vendors will not pass the reprogramming costs on to their customers (*i.e.* the advisers) due to a very low per unit cost. Based on the above estimates, we believe that the total one-time computer system programming cost would be $1,195,000 for the advisers subject to this requirement.[213]

PCAOB registration. For an investment adviser to rely on the provision in amended rule 206(4)–2 that deems pooled investment vehicles to have satisfied the surprise examination requirement if audited financial statements are distributed to investors in the pool, the accountant that audits the pooled investment vehicle's financial statements must be registered with, and subject to regular inspection by, the PCAOB.[214] We acknowledge that not all pooled investment vehicle audits are performed by accountants meeting the PCAOB requirement as this is a new requirement. However, our staff has reviewed several third-party databases that contain the identity of accountants that perform these audits, and substantially all the pools that identified accountants were audited by PCAOB registered and inspected firms or their affiliates.[215] Moreover, a representative of venture capital firms stated that the "vast majority" of venture capital funds are audited and, as far as it could determine, all venture capital fund audits are conducted by PCAOB registered accounting firms that are subject to PCAOB inspection.[216] As a result, we do not believe there will be a substantial dislocation of pooled investment vehicle auditors as a result of the amended rule. For those pools that will have to change accounting firms, we do not believe based on discussions with accountants that there will be additional costs to retain an accounting firm registered with, and subject to inspection by, the PCAOB, as accountants that perform these financial statement audits are likely to be with national accounting firms or accounting firms that specialize in auditing pooled investment vehicles and that charge equivalent fees to accountants registered

[206] As stated in *infra* note 282, we estimate, based on IARD data, that there will be 396 advisers that do not currently use an independent qualified custodian and will be subject to the surprise examination with respect to 100% of their clients. We expect 15% of these advisers will choose to use independent custodians instead of incurring these costs to comply with the rule. (396 × 85%) = 337.

We note that the costs of reporting to the Commission (i) regarding "material discrepancy" pursuant to amended rule 206(4)–2(a)(4)(ii) and (ii) upon termination of engagement pursuant to amended rule 206(4)–2(a)(4)(iii) are included in the estimated accounting fees.

[207] (337 × $125,000) + (262 × $20,000) + (1,260 × $10,000) = $42,125,000 + $5,240,000 + $12,600,000 = $59,965,000. *See infra* notes 282 to 286 and accompanying text for explanation of the estimated amounts. We also note that we may have overestimated the costs for the surprise examination for advisers that have custody because a related person has custody of client assets in connection with advisory services. As we have indicated, as a result of the exception to the surprise examination requirement under amended rule 206(4)–2(b)(6) for an adviser that has custody because of its related person's custody of client assets and that can overcome the presumption that it is not operationally independent of the related person custodian, some of the 337 advisers may not have to obtain a surprise examination. Those advisers that overcome the presumption may, however, incur outside legal expenses to assist with that determination. *See infra* note 283.

[208] One commenter, the Chamber of Commerce, generally stated that the Commission's estimate of $250,000 was too low, but did not provide alternative data. *See* the Chamber of Commerce Letter. Another commenter, Securities Industry and Financial Markets Association, however, concurred with our cost estimate of $250,000. *See* SIFMA(PCLC) Letter. A third commenter, Managed Funds Association, estimated that the internal control report of a hedge fund adviser would cost approximately $500,000 and over $1 million in some cases. *See* MFA Letter. We understand that advisers to pooled investment vehicles typically do not maintain client assets as qualified custodians and, as a result few advisers to pooled investment vehicles would have to obtain an internal control report. Rather, it is more likely that the internal control report would be for a related person broker-dealer, which costs we believe are accurately reflected in the comment letter sent by the Securities Industry and Financial Markets Association. *See* SIFMA(PCLC) Letter. After further consultation with several accounting firms that have experience in preparing Type II SAS 70 reports, including accounting firms that are registered with the PCAOB, we believe our estimate of $250,000 is reasonable. Moreover, we are not requiring that a specific type of internal control report be provided under the rule as long as the objectives noted above are addressed. This flexibility should permit accountants of qualified custodians to leverage audit work they have performed to satisfy existing regulatory requirements to which these custodians are subject, which may reduce the costs for advisers to comply with the internal control report requirement.

[209] Of the 337 advisers (*see supra* note 206 for this estimate) that will be subject to both the surprise examination and internal control report requirement, we further estimate, based on consultation with several accounting firms, that 10% of these advisers already obtain an internal control report for purposes other than the custody rule. In addition, we believe that some related persons may serve as the qualified custodian for more than one affiliated adviser. We estimate that this will reduce the number of required internal control reports by an additional 15%. *See infra* notes 289 and 290 and accompanying text for explanation of this estimate. 337 − (337 × 10%) − (337 × 15%) = 337 − 34 − 51 = 252.

[210] $250,000 × 252 = $63,000,000. *See supra* note 207 and *infra* notes 275 to 292 and accompanying text for explanation of our estimate of costs of the internal control report.

[211] $59,965,000 (accounting fee for surprise examination) + $63,000,000 (accounting fee for internal control report) = $122,965,000.

[212] As stated above, we estimated that there will be 2,389 advisers subject to this requirement. *See supra* note 196 and accompanying text. 2,389/2 = 1,195.

[213] 1,195 × $1,000 = $1,195,000. *See infra* note 294 for explanation of the estimate.

[214] Amended rule 206(4)–2(b)(4).

[215] These databases do not distinguish between funds managed by registered advisers from those managed by exempt advisers (who would not be subject to the rule).

[216] NVCA Letter.

with, and subject to inspection by, the PCAOB.[217]

B. Form ADV

In connection with our proposed amendments to Form ADV, we submitted cost and burden estimates of the collection of information requirements to the Office of Management and Budget ("OMB"). We estimated that these amendments would increase the annual information collection burden in connection with Form ADV from 22.25 hours to 22.50 hour for each adviser.[218] The total information collection burden resulting from the amendments would be 3,068 hours.[219] We solicited comment in the Proposing Release on our estimates, but did not receive comments. We do not believe that the amendments to Form ADV we are adopting today will result in a collection of information requirement different than what we estimated in the Proposing Release. Therefore, we are not revising our PRA burden and cost estimates submitted to the OMB with respect to Form ADV.

C. Form ADV–E

The currently approved collection of information for Form ADV–E is 9 hours. We estimate that this collection of information will increase to 112 hours based on the amendments.[220] This increase results primarily from an increase in the estimated number of advisers that will be subject to the requirement of completing Form ADV–E under the amended rule 206(4)–2 and the additional collections of information required by the amendments to the rule.[221]

For the currently approved annual hour burden for Form ADV–E, we estimated that 231 advisers would be subject to the annual surprise examination requirement, including the requirement to complete Form ADV–E, and that each of the advisers would spend approximately 0.05 hour to complete Form ADV–E. We now estimate that 1,859 advisers will be required to undergo an annual surprise examination and complete Form ADV–E, and that the total annual hour burden for Form ADV–E in connection with the surprise examination requirement will therefore increase to 93 hours.[222]

In addition, amended rule 206(4)–2 requires an adviser subject to the surprise examination to enter into a written agreement with the independent public accountant that specifies the accountant's duties, including filing Form ADV–E upon the termination of its engagement. Based on an assumption that advisers change their independent public accountants every five years on average and an estimate that advisers spend approximately 0.05 hours to complete Form ADV–E, advisers will be required each year to complete Form ADV–E with respect to an accountant's termination with an annual burden of 19 hours.[223] The total annual hour burden for advisers to complete Form ADV–E in connection with the surprise examination and the termination statement will be 112 hours.[224]

V. Cost-Benefit Analysis

A. Background

The Commission is sensitive to the costs and benefits resulting from its rules. Rule 206(4)–2, the custody rule, seeks to protect clients' funds and securities in the custody of registered advisers from misuse or misappropriation by requiring advisers to maintain their clients' assets with a qualified custodian, such as a broker-dealer or a bank. The custody rule, as amended, requires all registered advisers that have custody of client assets to have a reasonable belief, formed after due inquiry, that a qualified custodian sends an account statement directly to each advisory client for which the qualified custodian maintains assets.[225] The amended rule also requires advisers that have custody of client assets to undergo an annual surprise examination by an independent public accountant with the exception of advisers that have custody solely because of their authority to deduct advisory fees from client accounts,[226] and advisers that have custody solely because a related person holds the adviser's client assets and the related person is operationally independent of the adviser.[227] In addition, advisers to pooled investment vehicles are deemed to comply with the surprise examination requirement if the pools are subject to an annual financial statement audit by an independent public accountant that is registered with, and subject to regular inspection by, the PCAOB, and if the audited financial statements are delivered to the pool's investors.[228]

We are also adopting amendments to the rule to impose additional requirements when advisory client assets are maintained by the adviser itself or by a related person rather than with an independent qualified custodian. The amended rule requires, in addition to the surprise examination discussed above,[229] that the adviser obtain, or receive from its related person, no less frequently than once each calendar year, a written report, which includes an opinion from an independent public accountant with respect to the adviser's or related person's controls relating to custody of client assets, such as a Type II SAS 70 report.[230] The amended rule also requires, in these circumstances, that the independent public accountant issuing the internal control report, as well as the independent public accountant performing the surprise examination, be registered with, and subject to regular inspection by, the PCAOB.[231] The adviser must maintain the internal control report in its records and make it available to the Commission or staff upon request.[232]

Finally, we are adopting several amendments to Form ADV and Form ADV–E. The amendments to Form ADV require registered advisers to report to us more detailed information about their custody practices. The amendments to

[217] Two commenters expressed concerns about costs with respect to the requirement of PCAOB registration for accountants performing surprise examinations and preparing internal control reports for advisers that serve, or have related persons serve, as the qualified custodian for their client assets. *See* Consortium Letter; Chamber of Commerce Letter. These comments, however, were not directed to the costs of engaging PCAOB registered accountants for audits of pooled investment vehicles, and the commenters that did recommend the PCAOB requirement did not indicate there would be increased costs for such a requirement. *See, e.g.,* CPIC Letter, MFA Letter.

[218] *See* the Proposing Release at n.169 and accompanying text. We received no comments on the estimate and we are keeping the estimate unchanged.

[219] *See* the Proposing Release at n.170 and accompanying text. We received no comments on the estimate and we are keeping the estimate unchanged.

[220] We requested comment on our estimates of the collection of information burden relating to Form ADV–E and received no comment.

[221] Form ADV–E is the cover sheet for the required filing with the Commission by the accountant performing the surprise examination pursuant to amended rule 206(4)–2(a)(4)(i) and (iii). The adviser completes Form ADV–E and provides it to the accountant, which results in an estimated hour burden for the advisers.

[222] $1,859 \times 0.05 = 93$.

[223] $1,859/5 = 372$. $372 \times 0.05 = 19$.

[224] $93 + (372 \times 0.05) = 93 + 19 = 112$.

[225] Amended rule 206(4)–2(a)(3). We have retained the exception from the account statement delivery requirement for certain advisers to pooled investment vehicles. Amended rule 206(4)–2(b)(4).

[226] Amended rule 206(4)–2(b)(3). This exception would also be available to such an adviser when the adviser can rely on amended rule 206(4)–2(b)(6). *See* Section II.C.2. of this Release. The exception would not be available, however, to an adviser that has custody under the rule for other reasons.

[227] Amended rule 206(4)–2(b)(6).

[228] Amended rule 206(4)–2(b)(4).

[229] Amended rule 206(4)–2(a)(6).

[230] Amended rule 206(4)–2(a)(6)(ii). As discussed in the costs section below, other types of reports could also satisfy the internal control report requirement.

[231] Amended rule 206(4)–2(a)(6)(i) and (ii)(C).

[232] Amended rule 204–2(a)(17)(iii).

Form ADV–E require that the form and the accompanying accountant's examination certificate, or statement upon termination, be filed electronically with the Commission through the IARD and conform Form ADV–E instructions to amended rule 206(4)–(2).

In the Proposing Release, we requested comment and empirical data regarding the costs and benefits of the amendments. Most of the 1,300 commenters expressed their support for our goal of strengthening protections provided to advisory clients under the custody rule. One opined that the benefits of the proposed additional safeguards to investors whose assets are held in custodial accounts outweigh the costs to advisers.[233] Many, however, generally expressed concern about the costs, particularly to small advisers, of our proposal as it would have applied to advisers that have custody solely because of their authority to deduct advisory fees from client accounts.[234] As noted above, we have provided an exception from the surprise examination requirement for these advisers. Several commenters provided comments on the costs and benefits in the Proposing Release, which we address below.

B. Benefits

Improved protection for advisory clients. The rule and form amendments we are adopting today are designed to strengthen controls over the custody of client assets by registered investment advisers and to encourage the use of independent custodians. They will also improve our ability to oversee advisers' custody practices and, together with the guidance for independent public accountants that we are issuing, may prevent client assets from being lost, misused, misappropriated or subject to advisers' financial reverses. The benefits to investors are difficult to quantify, and commenters did not submit empirical data on potential benefits. We believe, however, that these benefits will be substantial, including, generally, increased confidence investors will have when obtaining advisory services from registered investment advisers. In addition, we believe the amendments to the rule could, to a limited extent, promote efficiency and capital formation as a result of such increased investor confidence. In particular, increased investor confidence could lead to more efficient allocation of investor assets, which could result in an increase in the assets under management of investment advisers and, depending on how those assets are invested, a potential increase in the availability of capital.

As described above, the amended custody rule requires investment advisers registered with us that have custody of client assets, subject to certain exceptions, to obtain a surprise examination of client assets by an independent public accountant. As a result, advisers that have custody because, for example, they or their related person serves as qualified custodian for client assets, or because they serve as trustee of a client trust or have a power of attorney over client affairs, must undergo an annual surprise examination.[235] The surprise examination requirement should significantly contribute to deterring fraudulent conduct by investment advisers because advisers subject to the surprise examination will know their clients' assets are subject to verification at any time, and therefore may be less likely to engage in misconduct. If fraud does occur, the surprise examination requirement will increase the likelihood that fraudulent conduct will be detected earlier so that client losses will be minimized.[236] The additional review provided by an independent public accountant will also benefit advisory clients because it may help identify problems that clients may not be in the position to uncover through the review of account statements. We estimate that the rule will require 1,859 advisers[237] to obtain an annual surprise examination, and as a result provide the benefits identified above with respect to 956,237 clients.[238]

As amended, rule 206(4)–2 requires, in addition to the surprise examination discussed above, that when an adviser or its related person serves as a qualified custodian for advisory client assets, the adviser obtain, or receive from its related person, no less frequently than once each calendar year, a written report, which includes an opinion from an independent public accountant with respect to the adviser's or related person's controls relating to custody of client assets ("internal control report"), such as a Type II SAS 70 report.[239] The amended rule also requires, in these higher risk situations, that the independent public accountant issuing the internal control report, as well as the independent public accountant performing the surprise examination, be registered with, and subject to regular inspection by, the PCAOB.[240]

The internal control report requirement will provide important benefits to advisory clients by imposing additional safeguards when client assets are maintained with the adviser or a related person. First, the internal control report will indicate whether the qualified custodian (the adviser or its related person) has established appropriate custodial controls by including an accountant's opinion regarding whether the custodian's internal controls are suitably designed and are operating effectively to meet control objectives related to custodial services, including the safeguarding of funds and securities.[241] Second, to satisfy the rule's requirements, the independent public accountant preparing the internal control report must verify that client assets are reconciled to a custodian other than the adviser or its related person, which will serve as a critical check when the custodian is not independent.[242] Third, an internal control report may also significantly strengthen the utility of the surprise examination when the adviser or a related person custodian maintains client assets because the independent public accountant performing the surprise examination may obtain additional comfort that confirmations received from the qualified custodian in the course of the surprise examination are reliable. Clients of approximately 337 advisers will benefit from the protections provided by the internal control report requirement.[243]

As noted above, the amended rule provides a limited exception from the surprise examination requirement in certain circumstances when the adviser

[233] CFA Institute Letter.

[234] Of the 1,300 comment letters, approximately 1,100 were form letters or substantially similar letters submitted by smaller advisory firms that, in part, generally expressed concerns regarding the costs of the proposal as it related to the surprise examination for advisers with custody solely due to authority to withdraw advisory fees.

[235] *See* Section II. B of this Release.

[236] The independent public accountant conducting a surprise examination is required to verify client assets of which an adviser has custody, including those maintained with a qualified custodian and those that are not required to be maintained with a qualified custodian, such as certain privately offered securities and mutual fund shares.

[237] *See supra note* 173 and accompanying text for explanation of this estimate.

[238] [337 (advisers) × 2,315 (average number of clients for advisers subject to the surprise examination)] + (1,522 × 2,315 × 0.05 (percentage of clients whose assets are subject to the surprise examination)) = 780,155 + 176,172 = 956,237.

[239] Amended rule 206(4)–2(a)(6)(ii). As discussed in more detail below, other types of reports could also satisfy the internal control report requirement.

[240] Amended rule 206(4)–2(a)(6)(i) and (ii)(C).

[241] *See* Accounting Release.

[242] Amended rule 206(4)–2(a)(6)(ii)(B).

[243] *See supra* notes 174 and 175 and accompanying text for explanation of the estimated number. Because these advisers serve, or have a related person serve, as the qualified custodian for their client assets, they are subject to the internal control report requirement. Amended rule 206(4)–2(a)(6).

is deemed to have custody solely as a result of a related person having custody.[244] The exception is available to an adviser that is (i) deemed to have custody solely as a result of certain of its related persons holding client assets, and (ii) "operationally independent" of its related person.[245] Advisers that can overcome the presumption that they are not operationally independent of their related person will benefit from the cost savings of not having to obtain a surprise examination under these circumstances.[246] Clients may also benefit from this provision in two respects. First, it may encourage advisers with a choice of related person qualified custodians to use those that are operationally independent over those that are not, which may lower custodial risks to clients. Second, while clients will not have the benefit of the surprise examination under these circumstances, they will benefit from the protections of the internal control report that the adviser must receive from a related person that is a qualified custodian.

When the adviser or its related person serves as qualified custodian for client assets, the surprise examination and internal control report must be performed or prepared by an independent public accountant that is registered with, and subject to regular inspection by, the PCAOB.[247] We are also amending rule 206(4)–2 to require that in order to be deemed to comply with the surprise examination requirement, advisers to audited pooled investment vehicles must have the pool's annual audited financial statements prepared by an independent public accountant that is registered with, and subject to regular inspection by, the PCAOB and distribute the audited financial statements to the investors in the pool.[248] Advisory clients and pool investors will benefit by having greater confidence in the quality of the surprise examination, the internal control report and pooled investment vehicle audits when performed or prepared by an independent public accountant that is registered with, and subject to regular inspection by, the PCAOB. While PCAOB inspection is focused on public company audit engagements, we believe that requiring that the accountant not only be registered with the PCAOB but be subject to its inspection can provide indirect benefits regarding the quality of the accountant's other engagements.

The amendments also eliminate the alternative, currently provided in the rule, under which an adviser with custody can send its own account statements to clients if the adviser is subject to an annual surprise examination. Instead, all advisers with custody are required to have a reasonable belief, after due inquiry, that the qualified custodian sends account statements directly to clients. As a result, we expect that clients of approximately 190 advisory firms that currently send their own account statements to clients will, under the amended rule, receive account statements directly from qualified custodians.[249] Where the qualified custodian is independent, this change provides advisory clients confidence that erroneous or unauthorized transactions will be reflected in the account statement. As a result, this change may deter advisers from engaging in fraudulent activities and allow clients to detect any unauthorized activity in their accounts promptly, thereby averting or reducing losses. Clients of these 190 advisers will benefit from this amendment and will start receiving account statements directly from qualified custodians.

The amended rule requires advisers to include a legend in the notice that they are currently required to send to their clients upon opening a custodial account on their clients' behalf if the adviser sends its own account statements to clients and in any subsequent account statements it sends to clients.[250] The legend will urge clients to compare the account statements they receive from the custodian with those they receive from the adviser. As discussed above, client review of periodic account statements from the qualified custodian is an important measure that can enable clients to discover improper account transactions or other fraudulent activity. Raising clients' awareness of this safeguard under the custody rule at account opening and with each subsequent account statement sent by the adviser may cause clients to uncover any unauthorized transactions by their advisers in their accounts more promptly, thereby averting or reducing losses. We estimate that 250,367 clients would receive notices and subsequent account statements containing this additional information.[251]

Under the amended rule, each adviser that is required to undergo an annual surprise examination must enter into a written agreement with an independent public accountant to perform the surprise examination. The written agreement will require the independent public accountant to, among other things, (i) file Form ADV–E accompanied by a certificate within 120 days of the time chosen by the accountant for the surprise examination stating that it has examined the client assets and describing the nature and extent of the examination, (ii) report to the Commission any material discrepancies discovered in the examination within one business day, and (iii) upon the accountant's termination or dismissal, or removal from consideration for reappointment, file Form ADV–E within 4 business days accompanied by a statement explaining any problems relating to examination scope or procedure that contributed to the resignation, dismissal, removal, or other termination. These filings and reports will provide our staff additional information to assist in establishing advisers' risk profiles for purposes of prioritizing examinations. The rule will result in the electronic filing of Form ADV–E and the accountant statement on the IARD system.[252] Clients will benefit from electronic filing of the Form ADV–E because it will allow them to easily access important information about the surprise examinations performed on their advisers. We estimate that 4,303,585 advisory clients will benefit from the amendment.[253] Furthermore, the availability to the general public of Form ADV–E information on the Commission's web site may result in additional benefits, including deterring misconduct before it occurs and providing additional information for

[244] Rule 206(4)–2(b)(6).

[245] *Id.*

[246] We have estimated that each of these surprise examinations would cost an adviser $125,000. *See infra* notes 282—283 and accompanying text.

[247] Amended rule 206(4)–2(a)(6)(i) and (ii)(C).

[248] Amended rule 206(4)–2(b)(4).

[249] Based on ADV–E filings, there were 190 advisers that underwent surprise examinations during 2008.

[250] Amended rule 206(4)–2(a)(2).

[251] We estimated that approximately 2,986 advisers open accounts on behalf of their clients. Based on our staff's observation, we further estimate that 80% of these advisers send account statements to their clients. (2,986 × 0.8 = 2,389). We estimate that each year these 2,389 advisers on average open accounts for about 5% of their 2,096 clients (average number of clients of the advisers with custody of client assets) who are either new clients or whose accounts have been transferred to new qualified custodians and that these advisers also send their own account statements to clients. (2,389 × (2,096 × 0.05) = 250,367).

[252] Until the IARD system is upgraded to accept Form ADV–E, accountants performing surprise examinations should continue paper filing of Form ADV–E. Investment advisers will be notified as soon as the IARD system can accept filings of Form ADV–E.

[253] 1,859 × 2,315 (average number of clients of the advisers subject to the surprise examination) = 4,303,585.

clients to consider when deciding which investment adviser to select.

We are adopting the amendments to Item 7 and Section 7.A. of Schedule D that we proposed to require each adviser to report *all* related persons who are broker-dealers and to identify which, if any, serve as qualified custodians with respect to the adviser's clients' funds or securities.[254] We are also amending Item 9 to require advisers that have custody (or whose related persons have custody) of client assets to provide additional information about their custodial practices under the custody rule. In addition, the revised Schedule D of Form ADV requires an adviser to provide additional details including information about the independent public accountants that perform annual audits, surprise examinations or that prepare internal control reports,[255] whether a report prepared by an independent public accountant contains an unqualified opinion,[256] and about any related person that serves as a qualified custodian for the adviser's clients.[257] We also are amending Schedule D to require an adviser to report whether it has determined that it has overcome the presumption that it is not operationally independent from a related person qualified custodian, and thus is not required to obtain a surprise examination for the clients' assets maintained at that custodian. These disclosures will provide our staff more information to determine advisers' risk profiles and prepare for examinations. Moreover, this information will be filed electronically when IARD accepts these filings, and as a result the information will be available to the public through the Commission's Web site. Clients will benefit directly from these amendments by obtaining more information about their advisers' custodial practices. They may also benefit indirectly because advisers will be incentivized to implement strong controls and practices to avoid receiving a qualified opinion from an independent public accountant.

Finally, under the amended rule, an adviser to pooled investment vehicles that is deemed to comply with the surprise examination requirement and that is excepted from the account statement delivery requirement by having the pooled investment vehicle audited and distributing the audited financial statements to the investors must, in addition to obtaining an annual audit, obtain a final audit of the fund's financial statements upon liquidation of the fund and distribute the financial statements to fund investors promptly after the completion of the audit.[258] This amendment provides fund investors the information necessary to protect their rights and to make sure that the proceeds of the liquidation are appropriately accounted for.

Improved clarity of the rule. We anticipate that investment advisers will find it easier to understand and comply with the rule as a result of the amendments, which may result in cost savings for advisers. The amendments will improve the clarity of the rule by adding several definitions, including amending the definition of "custody" to address related person custodian situations, and adding definitions of "control" and "related person."[259]

C. Costs

Surprise Examination. As noted above, the amended rule we are adopting today excludes certain advisers with custody from the requirement to undergo an annual surprise examination and deems certain others to comply with the requirement.[260] Advisers that have custody for other reasons, however, such as because they or their related person serves as the qualified custodian for client assets, or because they serve as the trustee of a client trust, must undergo an annual surprise examination.[261] As a result, we now estimate that 1,859 advisers will be subject to the surprise examination requirement under amended rule 206(4)–2.[262] Reducing that number by the 190 advisers that already undergo an annual surprise examination under the current rule,[263] we estimate that the amendments will result in approximately 1,669 additional advisers being required to obtain a surprise examination.[264]

For purposes of the PRA analysis, we estimate that the total annual collection of information burden in connection with the surprise examination, before including the hours spent on conforming written agreements with accountants to the amended rule, will be 19,950 hours.[265] Based on this estimate, we anticipate that advisers will incur an aggregate cost of approximately $1,256,850 per year for these estimated hours.[266]

Written agreement. As proposed, amended rule 206(4)–2 requires that an adviser subject to the surprise examination requirement must enter into a written agreement with the independent public accountant engaged to conduct the surprise examination and specify certain duties to be performed by the independent public accountant.[267] As stated in the Proposing Release, we believe that written agreements are commonplace and reflect industry practice when a person retains the services of a professional such as an independent public accountant, and they are typically prepared by the accountant in advance. Because the amended rule applies to investment advisers (and not accountants) we believe that the burden to add the provisions to the written agreement will be borne by the adviser. We estimate that each adviser will spend 0.25 hour to add the required provisions to the written agreement, with an aggregate of 465 hours for all advisers subject to surprise examinations.[268] Requiring certain additional items to be included in the written agreement will not significantly increase costs for advisers.[269] Moreover,

[254] The item had required an adviser to identify on Schedule D of Form ADV each related person that is an investment adviser, but made reporting of the names of related person broker-dealers optional.

[255] Section 9.C. of Schedule D of Form ADV.

[256] *Id.*

[257] Section 9.D of Schedule D of Form ADV.

[258] Amended rule 206(4)–2(b)(4)(iii).

[259] Amended rule 206(4)–2(d).

[260] Amended rule 206(4)–2(b)(3) (exception from surprise examination for advisers that have custody because they have authority to deduct fee from client accounts); amended rule 206(4)–2(b)(6) (exception from surprise examination for advisers that have custody solely because a related person holds the adviser's client assets and the related person is operationally independent of the adviser); and amended rule 206(4)–2(b)(4) (deemed compliance with the surprise examination requirement for advisers to audited pooled investment vehicles that distribute audited financial statements to pool investors if the audit was conducted by an independent public accountant registered with, and subject to regular inspection by, the PCAOB).

[261] Under amended rule 206(4)–2 an adviser has custody if its related person has custody of its client assets. Amended rule 206(4)–2(d)(2). A related person is defined as a person directly or indirectly controlling or controlled by the adviser, and any person under common control with the adviser. Amended rule 206(4)–2(d)(7).

[262] *See supra* note 173.

[263] *See supra* note 249.

[264] $1,859 - 190 = 1,669$.

[265] *See supra* note 184 accompanying text for explanation of the estimate.

[266] We expect that the function of providing lists of clients to the independent public accountant in assisting its examination, totaling 19,950 hours, would be performed by compliance clerks. Data from the *Securities Industry and Financial Markets Association's Office Salaries in the Securities Industry 2008,* modified by Commission staff to account for an 1800-hour work-year and multiplied by 2.93 to account for bonuses, firm size, employee benefits and overhead, suggest that cost for this position is $63 per hour. Therefore the total costs would be $1,256,850.

[267] Amended rule 206(4)–2(a)(4).

[268] $1,859 \times 0.25 = 465$.

[269] We estimate that it will take each adviser about 0.25 hour to add the required specifications. *See supra* note 186 and accompanying text. Converting the hour burden to costs, each adviser would spend $64.50. *See infra* note 271.

we do not believe that the new requirements placed on the independent public accountant by the written agreement (electronic filing of Form ADV–E and termination statement) will materially increase the accounting fees for the surprise examination discussed above.

For purposes of the PRA analysis, we estimate a total annual collection of information burden in connection with the surprise examination of 20,415 hours.[270] Based on this estimate, we anticipate that advisers will incur an aggregate cost of approximately $1,376,820 per year for the total hours their employees spend in complying with the surprise examination requirement.[271]

In the Proposing Release, we estimated that there would have been 9,575 advisers subject to the surprise examination and they would each pay, on average, an annual accounting fee of $8,100 for the surprise examination.[272] The estimated total accounting fees for all surprise examinations would therefore have been $77,557,500.[273] As explained above, the amended rule excepts from the surprise examination requirement, advisers that have custody because of deducting advisory fees, and advisers that have custody solely because a related person holds the adviser's client assets and the related person is operationally independent of the adviser, and it deems advisers to audited pooled investment vehicles to comply with the requirement under certain circumstances,[274] reducing our estimated number of advisers subject to the surprise examination requirement from 9,575 to 1,859.[275]

Several commenters believed that our cost estimates for surprise examination accounting fees were too low.[276] Some of them provided their own estimates ranging from an amount close to our estimate (for smaller advisers),[277] to over one million dollars for the largest firms.[278] We believe that the costs of the surprise examination are lower than the costs suggested by commenters because commenters' estimates were based on two critical assumptions that no longer are valid. First, these estimates were generally based on an understanding that the examination would involve verifying 100% of client assets, as is currently required under our existing guidance for accountants.[279] The revised guidance for accountants we are issuing, however, among other things, permits accountants to use sampling in the course of the surprise examination.[280] Second, many of these estimates are based on an assumption that an adviser would have custody of all of its clients' accounts based on our proposal to require the surprise examination if an adviser had custody because of the authority to deduct advisory fees directly from client accounts. The rule now provides an exception from the surprise examination when fee deduction is the reason the adviser has custody. As a result, many advisers that have custody under the amended rule will have custody with respect to a limited number of client accounts, and the scope of work for the accountant performing the surprise examination will be significantly reduced.

While, for reasons discussed above, we believe commenters' estimates of the cost of surprise examination are too high, they have caused us to reexamine our cost estimates and to determine that it would be more appropriate to categorize advisers into subcategories to estimate surprise exam costs. Instead of a single average cost, we have divided the 1,859 advisers that are subject to the surprise examination requirement into three distinct groups.[281] We now estimate that 337 advisers either serve as qualified custodian for their clients or have a related person that serves as qualified custodian.[282] These advisers would likely be subject to the surprise examination with respect to 100 percent of their clients, and as these advisers typically are large advisers with many clients, we estimate they will each spend an average of $125,000 annually.[283] We estimate that the rest of the advisers will be subject to surprise examination with respect to 5 percent of

[270] This estimated number includes the hours an adviser spends on providing client lists to the accountant performing the surprise examination and meeting the rule's requirements for the written agreement with the accountant regarding its engagement to perform the surprise examination. 15,603 hours (advisers subject to the surprise exam for 100% of clients to provide client lists) + 3,051 (advisers subject to the surprise exam for advisers with custody of a small portion of their clients to provide client lists) + 1,296 (advisers to pooled investment vehicles that are subject to the surprise examination to provide investor lists) + 465 (written agreement with accountants) = 20,415.

[271] As we stated above, the total estimated burden hours related to the surprise examination requirement, before including the hours for written agreement with the accountant, are 19,950 hours with an estimated costs of $1,256,850. *See supra* note 184 for explanation of the estimated hours and *supra* note 266 for explanation of estimated cost. We expect that the function of adding certain duties of the accountant to the written agreement with the accountant, totaling 465 hours, would be performed by compliance managers. Data from the *Securities Industry and Financial Markets Association's Management & Professional Earnings in the Securities Industry 2008,* modified by Commission staff to account for an 1800-hour work-year and multiplied by 5.35 to account for bonuses, firm size, employee benefits and overhead, suggest that the cost for this position is $258 per hour. Therefore the total costs would be $1,376,820 ((19,950 × $63) + (465 × $258) = $1,376,820).

[272] *See* Proposing Release at n.102 and accompanying text.

[273] 9,575 × $8,100 = $77,557,500.

[274] *See* Section II.C.2. of this Release.

[275] *See supra* notes 170 to 173 and accompanying text.

[276] *See, e.g.,* FPA Letter (estimated costs of $15,000 to $24,000), IAA Letter (estimated costs of $20,000 to $300,000).

[277] CFP Board Letter (estimating cost of surprise examination from $5,000 to $10,000).

[278] SIFMA(PCLC) Letter (member survey indicated average cost estimate of $200,000 with one response of over $1,000,000).

[279] *See* ASR No. 103.

[280] *See* Accounting Release.

[281] The revised estimated costs are based on the experience of our staff and discussions with public accounting firms regarding the surprise examination requirement, modern accounting practices, and commenters' estimates.

[282] Based on IARD data, we estimated 396 advisers either serve as qualified custodian for their clients or have a related person that serves as qualified custodian. These advisers would likely be subject to the surprise examination with respect to 100 percent of their clients. We expect 15% of these advisers will use independent custodians instead of incurring these costs. This estimate is based on comments that we received about the high costs of the proposed requirements with respect to advisers using a related person as the qualified custodian. We believe that these advisers will do their own analysis of the benefits of continuing using their related persons as qualified custodians. Some of the advisers that maintain client assets with their related person custodians on an incidental basis may decide to use independent qualified custodians instead to avoid the costs of complying with the requirements. (396 × 85%) = 337.

[283] Several of these large advisers are advisers with thousands of client accounts, while others have significantly fewer client accounts. The largest advisers will likely incur expenses higher than $125,000. Whereas those with significantly fewer client accounts will likely incur expenses less than $125,000. Moreover, as a result of the exception to the surprise examination requirement under amended rule 206(4)–2(b)(6) for an adviser that has custody because of its related person's custody of client assets and that can overcome the presumption that it is not operationally independent of the related person custodian, some of these 337 advisers would not have to obtain the surprise examination. We do not have data or another resource to provide an estimate of the number of advisers that use related person custodians that will be able to overcome the presumption. As a result, we are unable to estimate with specificity the reduced costs due to this exception. We do estimate that of the 337 advisers subject to the surprise examination, that 259 (after the 15% reduction noted above) use related person qualified custodians. *See supra* note 175. If 75% of the 259 of these advisers could overcome the presumption, the cost estimates for the surprise examination would be overstated by $24,281,250 ((259 × .75) × $125,000), if one half of them could overcome the presumption the costs would be overstated by $16,187,500 ((259 × .5) × $125,000), or if one quarter of them could overcome the presumption the costs would be overstated by $8,093,750 ((259 × .25) × $125,000). Those advisers that overcome the presumption may, however, incur outside legal expenses to assist with the determination. We estimate that on average, such legal assistance would cost an adviser between $4,000 (for 10 hours) and $16,000 (for 40 hours), significantly less than the estimated costs for the surprise examination. The hourly cost estimate of $400 on average is based on our consultation with advisers and law advisers who regularly assist them in legal and compliance matters.

their client accounts.[284] We have divided these 1,522 advisers into two groups based on their number of clients: 262 medium-sized advisers and 1,260 small-sized advisers.[285] We estimate that medium-sized advisers will on average have accounting fees of $20,000 annually and small-sized advisers will on average have accounting fees of $10,000 annually for the surprise examination. Therefore the aggregate account fee relating to the surprise examination is estimated at $59,965,000.[286]

Internal Control Report. Under amended rule 206(4)–2, if an adviser or a related person serves as a qualified custodian for client assets in connection with advisory services the adviser provides to clients, the adviser must obtain, or receive from the related person, no less frequently than once each calendar year, a written report of the internal controls relating to the custody of those assets from an independent public accountant that is registered with and subject to regular inspection by the PCAOB. We estimate that approximately 337 investment advisers must obtain, or receive from a related person, an internal control report relating to custodial services.[287] One securities industry commenter noted that custodians often already provide Type II SAS 70 reports to clients who demand a rigorous evaluation of internal control as a condition of obtaining their business.[288] We estimate that 10% of the advisers that must obtain or receive an internal control report will themselves or their related person qualified custodian will already obtain an internal control report for purposes other than the custody rule.[289] In addition, a single internal control report will satisfy the rule's requirement for several related advisers if their clients use the same related person as qualified custodian. We estimate that this will reduce the number of required internal control reports by an additional 15%.[290] As a result, we estimate that independent public accountants will prepare 252 internal control reports as a result of the rule amendments. Based on discussions with accounting professionals, we understand that the cost to prepare an internal control report relating to custody will vary based on the size and services offered by the qualified custodian, but that on average an internal control report will cost approximately $250,000 per year,[291] for total costs attributable to this section of the proposed rule to be $63,000,000.[292] These advisers also will need to maintain the report as a required record. We anticipate that the cost of maintaining these records will be minimal.

Although the amended rule does not require use of an independent custodian, we encourage the use of custodians independent of the adviser to maintain client assets as a best practice whenever feasible. As a result of the amendments and our encouragement, there may be effects on competition if additional advisers (and clients) begin using independent custodians, which is a common practice of many advisers today, particularly among those that are not themselves, or affiliated with, large financial service firms.

The total cost estimate above may overestimate actual costs incurred for internal control reports because of the factors discussed below. Accountants preparing an internal control report may incorporate relevant audit work performed for other purposes, including audit work performed to meet existing regulatory requirements, which should increase efficiencies in the audit process. These efficiencies are not represented in the estimated costs as the estimates are based on a custodian entering a new engagement for an internal control report. And any report that meets the objectives of the internal control report would be acceptable under the rule. In addition to the Type II SAS 70 report, other reports a qualified custodian already obtains could satisfy the rule's requirements. For instance, a report issued in connection with an attestation conducted in accordance with AT 601 under the standard of the AICPA would be sufficient, provided that such examination meets the objectives set forth in our guidance for accountants.

One-time computer system programming costs. As stated above, the amended rule would require an adviser that has obligation under the rule to provide a notice to clients upon opening a new account on behalf of the client or changes to such account and that sends account statements to its client to include in the account statement a legend urging the clients to compare its account statement with those sent by the qualified custodian. We expect that the requirement would cause advisers that are subject to the notice requirement and that send account statement to clients to reprogram their computer system to include the legend in account statements to clients. We estimate that half of the advisers that are subject to the rule or 1,195 advisers will hire a computer programmer to modify their computer system to automatically add the legend to client account statements at an average cost of $1,000 each.[293] We believe the other half routinely use off-the-shelf software to provide client account statements and will bear little or no direct costs because we expect the software vendors will not pass the reprogramming costs on to their customers (*i.e.* the advisers) due to a very low per unit cost. Based on the above estimates, we believe that the total one-time computer system programming cost would be $1,195,000 for the advisers subject to this requirement.[294]

PCAOB registration. For an investment adviser to rely on the provision in amended rule 206(4)–2 that deems pooled investment vehicles to have satisfied the surprise examination requirement if audited financial statements are distributed to investors in the pool, the accountant that audits the pooled investment vehicle's financial statements must be registered with, and subject to regular inspection

[284] Advisers are required to undergo an annual surprise examination with respect to only those client accounts to which they have access that causes them to have custody, including through a power of attorney, acting as trustee, or similar legal authority. Based on the experience of our staff, we estimate that on average, only 5 percent of client accounts of these advisers will be subject to the surprise examination.

[285] Based on responses to Item 5.C of Form ADV, we estimate that the average number of clients for these 1,522 advisers is 806. We determined, for purposes of this analysis, that an adviser with clients more than this average number is a medium size adviser and an adviser with clients less than this average number is a small adviser. 337 + 262 + 1,260 = 1,859.

[286] (337 × $125,000) + (262 × $20,000) + (1,260 × $10,000) = $42,125,000 + $5,240,000 + $12,600,000 = $59,965,000.

[287] *See supra* notes 276–278 for explanation of this estimate.

[288] SIFMA(AMG) Letter.

[289] Our estimate of 10% is based on our consultation with accounting firms that have experience in preparing internal control reports. 337 × 10% = 34.

[290] Our estimate of 15% is based on the IARD data. 337 × 15% = 51.

[291] *See supra* note 208 and accompanying text for explanation of this estimate.

[292] $250,000 × (337 − 34 − 51) = $250,000 × 252 = $63,000,000.

[293] As stated above, we estimated that there will be 2,389 advisers subject to this requirement. *See supra* note 196 and accompanying text. 2,389/2 = 1,195.

[294] 1,195 × $1,000 = $1,195,000. Data from the *Securities Industry and Financial Markets Association's Management & Professional Earnings in the Securities Industry 2008,* modified by Commission staff to account for an 1800-hour work-year and multiplied by 5.35 to account for bonuses, firm size, employee benefits and overhead, suggest that the cost for this position is $193 per hour. We further estimate that such reprogramming will take about 5 hours for each adviser. $193 × 5 hours = $965. Based on the above, we estimate that each adviser will spend approximately $1,000 as reprogramming costs.

by, the PCAOB.[295] We acknowledge that not all pooled investment vehicle audits are performed by accountants meeting the PCAOB requirement as this is a new requirement. However, our staff has reviewed several third-party databases that contain the identity of accountants that perform these audits, and substantially all the pools that identified accountants were audited by PCAOB registered and inspected firms or their affiliates.[296] Moreover, a representative of venture capital firms stated that the "vast majority" of venture capital funds are audited and, as far as it could determine, all venture capital fund audits are conducted by PCAOB registered accounting firms that are subject to PCAOB inspection.[297] As a result, we do not believe there will be a substantial dislocation of pooled investment vehicle auditors as a result of the amended rule. For those pools that will have to change accounting firms, we do not believe based on discussions with accountants that there will be additional costs to retain an accounting firm registered with, and subject to inspection by, the PCAOB, as accountants that perform these financial statement audits are likely to be with national accounting firms or accounting firms that specialize in auditing pooled investment vehicles and that charge equivalent fees to accountants registered with, and subject to inspection by, the PCAOB.[298]

Liquidation Audit. The amended rule specifically requires an adviser to a pooled investment vehicle that is relying on the annual audit provision to obtain a final audit if the pool is liquidated at a time other than the end of a fiscal year.[299] This requirement will assure that the proceeds of the liquidation are appropriately accounted for. We believe this requirement will not materially increase the costs for advisers to pooled investment vehicles because we believe most of these pooled investment vehicles are subject to contractual obligations with their investors to obtain a liquidation audit.[300] For purposes of PRA analysis, we estimate that advisers will spend 243 hours complying with the requirement[301] and thus will incur an aggregate cost of $15,309 for all advisers subject to the requirement.[302]

Qualified Custodian Account Statements. With the exception of advisers to certain pooled investment vehicles that distribute audited financial statements, the amended rule requires all registered advisers that have custody of client assets to have a reasonable belief, after due inquiry, that the qualified custodian sends account statements directly to their clients at least quarterly. We believe few advisers will have to change their practices to meet the requirement that all clients receive account statements directly from qualified custodians. Most advisers subject to the rule have qualified custodians that deliver account statements directly to clients and already conduct an inquiry of whether the qualified custodian sends account statements to clients.[303] For those advisers that previously had sent account statements directly to clients instead of having the qualified custodian send account statements to clients, the costs should not be significant because qualified custodians send account statements to clients in their normal course of business. The requirement that advisers form their reasonable belief after due inquiry similarly should not have significant costs, as we understand that today most advisers receive duplicate copies of client account statements from custodians.

Based on the above analysis, we conclude that the aggregate annual accounting fee to comply with the surprise examination requirement and the internal control report requirement under amended rule 206(4)–2 is estimated at $122,965,000. In addition, we estimate that the total hours spent by advisory employees to comply with the amendments[304] will be 29,003 at a total cost of $1,917,864[305] The total cost estimated for complying with amendments to 206(4)–2 is estimated at $126,077,864.[306]

Form ADV. We are adopting substantially as proposed several amendments to Part 1A of Form ADV that are designed to provide us with additional details regarding the custody practices of advisers registered with the Commission, and to provide additional data to assist in our risk-based examination program. For purposes of the PRA analysis, we estimated that these amendments will increase the annual information collection burden in connection with Form ADV from 22.25 hours to 22.50 hours for each adviser.[307] The total information collection burden resulting from the amendments would be 3,068 hours.[308] Based on this estimate, we anticipate that advisers will incur an aggregate cost of approximately $193,284 per year for the total hours their employees spend in connection with the amendments to Form ADV.[309]

[295] Amended rule 206(4)–2(b)(4).

[296] These databases do not distinguish between funds managed by registered advisers from those managed by exempt advisers (who would not be subject to the rule).

[297] NVCA Letter.

[298] Two commenters expressed concerns about costs with respect to the requirement of PCAOB registration for accountants performing surprise examinations and preparing internal control reports for advisers that serve, or have related person serve, as the qualified custodian for their client assets. *See* Consortium Letter; Chamber of Commerce Letter. These comments, however, were not directed to the costs of engaging PCAOB registered accountants for audits of pooled investment vehicles, and the commenters that did recommend the PCAOB requirement did not indicate there would be increased costs for such a requirement. *See, e.g.,* CPIC Letter, MFA Letter.

[299] Amended rule 206(4)–2(b)(4)(iii).

[300] As discussed above, amended rule 206(4)–2(c) provides that an adviser's sending an account statement (paragraph (a)(5)) or distributing audited financial statements (paragraph (b)(4)) will not meet the requirements of the rule if all of the investors in a pooled investment vehicle to which the statements are sent are themselves pooled investment vehicles that are related persons of the adviser. We do not believe this requirement will impose new costs on advisers under the rule because the application of the rule as required by this new provision was incorporated into our prior cost estimates.

[301] *See supra* note 193 and accompanying text.

[302] 243 × $63 (hourly wage) = $15,309. *See supra* note 266 for explanation of advisory employee wage estimate.

[303] Filing data indicates that 190 advisers (other than those that have custody but only have pooled investment vehicle clients that are subject to an annual audit) did not have the qualified custodian send account statements directly to their clients.

[304] The total hours include time spent to produce client contact lists for the accountant performing the surprise examination, add required language in a written agreement with the accountant engaged to perform the surprise examination, prepare a required legend in notices and subsequent statements to clients urging them to compare information contained in the account statements sent by the adviser with those sent by the qualified custodian, and distribute audited financial statements, including those related to liquidation audit, to fund investors. *See* Section IV of this Release for explanation of the estimates.

[305] *See supra* notes 270 and 271 and accompanying text for explanation of these estimates. [(19,950 (employee hours for surprise examination) + 243 (employee hours for distributing audited financials related to liquidation audit) + 8,345 (employee hours for adding a legend in the notice to clients)) × $63] + (465 (employee hours for adding language in written agreements) × $258) = $1,797,894 + $119,970 = $1,917,864.

We estimated that advisory employees will spend a total of 41,724 hours to comply with the notice requirement. The estimated 8,345 hours noted above for adding the legend to the required notice represents 20% of the total hour burden relating to the notice, which is 41,724 hours. (41,724 × 0.2) = 8,345. *See supra* note 197 for explanation of the estimate.

[306] ($122,965,000 (aggregate accounting fees) + $1,917,864 (costs of hours advisory employees spent) + $1,195,000 (cost of one-time computer system programming) = $126,077,864).

[307] *See supra* note 218 and accompanying text.

[308] *See supra* note 219 and accompanying text. We received no comments on the estimate and we are keeping the estimate unchanged.

[309] We expect that the function of completing Form ADV would be performed by compliance clerks at a cost of $63 per hour. The total cost would be $193,284 (3,068 × $63 = $193,284). *See supra* note 266 for explanation of the hourly compliance clerk cost estimate.

Form ADV–E. For purposes of the PRA analysis, we estimate that the collection of information in connection with Form ADV–E will increase from the currently approved 9 hours to 112 hours based on the requirements of the amended rule. This increase results from an increase in the estimated number of advisers that will be subject to the requirement of completing Form ADV–E under the amendments to rule 206(4)–2 and the additional collections of information required by the amendments relating to completing Form ADV–E when an independent public accountant performing the surprise examination terminates its engagement. This represents an increase of 103 hours [310] with an estimated aggregated annual cost of approximately $7,056.[311]

We recognize that there also might be certain costs to investment advisers, advisory clients and others that are not easily quantifiable. For instance, some advisers may choose to only use independent qualified custodians, and as a result, they may lose advisory clients if those clients insist on maintaining their assets with a particular custodian that happens to be a related person of the adviser. Advisory clients that are unwilling to change custodians also may lose the ability to hire an adviser that is related to the custodian if the adviser will only accept clients that use independent custodians. Advisers that chose to only use independent qualified custodians might also lose efficiencies that resulted from self-custody or related person custody arrangements, which could result in increased costs to advisory clients. Additionally, to the extent that advisers discontinue existing relationships with custodians, accountants or other service providers as a result of, or as required by, the amended rule, these service providers may lose revenues and incur other costs.

Based on the above analysis, we estimate that the aggregate costs for complying with the amendments to rule 206(4)–2, rule 204–2, Form ADV, and Form ADV–E will be $126,278,204.[312] Of this amount, we estimate that $1,195,000 is one-time computer system programming costs related to account statement legends, while the remainder will be recurred on an annual basis.

VI. Final Regulatory Flexibility Analysis

The Commission has prepared the following Final Regulatory Flexibility Analysis regarding rule 206(4)–2 in accordance with section 3(a) of the Regulatory Flexibility Act.[313] We prepared an Initial Regulatory Flexibility Analysis ("IRFA") in conjunction with the Proposing Release in May 2009. A summary of that IRFA was published with the Proposing Release.[314]

A. Need for the Rule

Rule 206(4)–2, the custody rule, requires registered advisers to maintain their clients' assets with a qualified custodian, such as a broker-dealer or a bank. To enhance the protections afforded to clients' assets, we are adopting amendments to the rule to require all registered advisers that have custody of client assets, among other things: (i) To undergo an annual surprise examination by an independent public accountant to verify client assets; (ii) to have a reasonable basis, after due inquiry, for believing that the qualified custodian maintaining client funds and securities sends account statements directly to the advisory clients; and (iii) unless client assets are maintained by an independent custodian (*i.e.,* a custodian that is not the adviser itself or a related person) to obtain, or receive from a related person, a report of the internal controls relating to the custody of those assets from an independent public accountant that is registered with and subject to regular inspection by the PCAOB.

We have designed the amendments to enhance the protections afforded to clients when their advisers have custody of client assets. We believe that the surprise examination requirement will deter fraudulent activities by advisers. Moreover, an independent public accountant may identify misuse that clients have not, which would result in the earlier detection of fraudulent activities and reduce resulting client losses.

The amendments adopted today provide that an adviser is deemed to have custody of client assets held by related persons. Related person custody arrangements can present higher risks to advisory clients than those that maintain assets with an independent custodian. We were concerned that the surprise examination alone would not adequately address custodial risks associated with self or related person custody because the independent public accountant seeking to verify client assets would rely on custodial reports issued by the adviser or the related person. To address these risks, we are adopting a requirement that a registered adviser obtain, or receive from its related person, an annual internal control report, which would include an opinion from an independent public accountant with respect to the adviser's or related person's custody controls.

B. Significant Issues Raised by Public Comment

In the Proposing Release, we requested comment on the IRFA. We received a number of comments related to the impact of our proposal on small advisers. They argued that the proposed amendments to the rule, particularly those that would have imposed the surprise examination requirement on advisers that have custody solely because of their authority to deduct advisory fees, would be disproportionately expensive for, and would impose an undue regulatory burden on, smaller firms.[315]

We are sensitive to the burdens our rule amendments will have on small advisers. We believe that the amendments to the custody rule we are adopting today will alleviate many of the commenters' concerns regarding small advisers. In particular, as described above, we have provided an exception from the surprise examination requirement for advisers who have custody because they have authority to deduct advisory fees from client accounts. Moreover, for small advisers still subject to the surprise examination requirement, the revised guidance for accountants modernizes the procedures for surprise examinations, which may reduce the burden on small advisers.[316]

C. Small Entities Subject to Rule

Under Commission rules, for the purposes of the Advisers Act and the Regulatory Flexibility Act, an investment adviser generally is a small

[310] 112 − 9 = 103. We received no comments on this estimate.

[311] We expect that the function of completing Form ADV–E would be performed by compliance clerks at a cost of $63 per hour. The total cost would therefore be $7,056 (112 × $63 = $7,056). *See supra* note 266 for explanation of the hourly compliance clerk cost estimate.

[312] $126,077,864 (total costs for complying amendments to rule 206(4)–2) + $193,284 (total costs for complying with amendments to Form ADV) + $7,056 (total costs for complying with amendments to Form ADV–E) = $126,278,204.

[313] 5 U.S.C. 605(b).

[314] *See* Proposing Release at Section VI.

[315] Mallon P.C. Letter (asserting that the requirement would cost 10 percent of smaller firms' gross income). *See also* CAS Letter; Consortium Letter; Cornell Letter; Form Letter D; FSI Letter; IAA Letter; NAPFA Letter; FPA Letter; Denk Letter. Some commenters argued that, at a minimum, it would force most small advisers to eliminate a convenient billing method chosen by many of their clients. ASG Letter; Cornell Letter; Form Letters C and D; FSI Letter; MarketCounsel Letter. Others urged us to consider that this proposal would likely drive many small advisers out of business, and would create a barrier to entry for others. Ameritrade Letter; IASBDA Letter; NAPFA Letter.

[316] *See* Accounting Release.

entity if it: (i) Has assets under management having a total value of less than $25 million; (ii) did not have total assets of $5 million or more on the last day of its most recent fiscal year; and (iii) does not control, is not controlled by, and is not under common control with another investment adviser that has assets under management of $25 million or more, or any person (other than a natural person) that had $5 million or more on the last day of its most recent fiscal year.[317]

The Commission estimates that as of November 2, 2009 approximately 73 SEC-registered investment advisers that have custody of client assets were small entities that will be subject to the surprise examination requirement under amended rule 206(4)–2(a)(4), and that no more than eight small entity advisers that have custody of client assets will be subject to the requirement of obtaining or receiving an internal control report under amended rule 206(4)–2(a)(6).[318]

D. Projected Reporting, Recordkeeping, and Other Compliance Requirements

The rule amendments impose certain reporting, recordkeeping and compliance requirements on advisers, including small advisers. The rule requires advisers that are subject to the surprise examination to complete Form ADV–E and to maintain internal control reports in certain instances. In addition, under the amendments, each adviser that is required to undergo an annual surprise examination must enter into a written agreement with the independent public accountant that performs the surprise examination that specifies certain duties the accountant must perform as part of the surprise examination engagement. Investment advisers, under the proposed rule amendments, must maintain a copy of an internal control report that an adviser is required to obtain, or receive from its related person, for five years from the end of the fiscal year in which the internal control report is finalized.

We estimate that a total of 1,859 advisers will be subject to the surprise examination requirement, of which 337 advisers will be subject to the surprise examination with respect to 100 percent of their clients and will each spend an average of $125,000 annually,[319] and 1,522 will be subject to the surprise examination with respect to 5 percent of their clients. Of the 1,522 advisers, 262 medium-sized advisers will each spend an average of $20,000 annually,[320] and 1,260 small-sized advisers will each spend an average of $10,000 annually.[321] The advisers subject to the surprise examination that fall into the definition of "small entities" under section 3(a) of the Regulatory Flexibility Act are among the smallest within the small-sized advisers group, with an average of fewer than 6 clients whose accounts would be subject to the surprise examination requirement.[322] As a result, the accounting fees for the surprise examination conducted on the client accounts at these advisers may be lower than our estimated average cost of $10,000.[323] As a result, the potential impact of the amendments on these small entities due to the surprise examination requirement should not be substantial.

We also estimate that, on average, an internal control report will cost approximately $250,000 per year, but would vary based on the size and services offered by the qualified custodian. As stated above, we estimate that no more than eight small entity advisers will be subject to the internal control report requirement, half of which will obtain the report and the other half will receive the report from a related person. We believe that the cost of an internal control report for the four small entity advisers that must obtain one will be lower than the estimated $250,000 because of the small scale of their businesses. Alternatively, these advisers may simply advise their clients to select independent qualified custodians so that they will not be subject to the requirement of obtaining an internal control report.

E. Agency Action To Minimize Effect on Small Entities

The Regulatory Flexibility Act directs the Commission to consider significant alternatives that would accomplish the stated objective, while minimizing any significant adverse impact on small entities. In connection with the rule amendments, the Commission considered the following alternatives: (i) The establishment of differing compliance or reporting requirements or timetables that take into account the resources available to small entities; (ii) the clarification, consolidation, or simplification of compliance and reporting requirements under the rule for such small entities; (iii) the use of performance rather than design standards; and (iv) an exemption from coverage of the rule, or any part thereof, for such small entities.

Regarding the first and fourth alternatives, we do not believe that differing compliance or reporting requirements or an exemption from coverage of the rule amendments, or any part thereof, for small entities, would be appropriate or consistent with investor protection. Because the protections of the Advisers Act are intended to apply equally to clients of both large and small advisory firms, it would be inconsistent with the purposes of the Act to specify different requirements for small entities under the amendments.

Regarding the second alternative, the amendments clarify when an investment adviser, including a small adviser, has custody. In addition, we are providing updated guidance for accountants that modernize the procedures for the surprise examination and should provide clarification to investment advisers, including small entities, and accountants on certain issues regarding the surprise examination. We also have endeavored to consolidate and simplify the rule, by adding new definitions to the rule.

Regarding the third alternative, we do not consider using performance rather than design standards to be consistent with our statutory mandate of investor protection with respect to custody of client assets by investment advisers.

VII. Effects on Competition, Efficiency and Capital Formation

We are adopting amendments to rule 204–2, Part 1A of Form ADV and Form ADV–E, in part, pursuant to our authority under Section 204. Section 204 requires the Commission, when engaging in rulemaking pursuant to that authority, to consider whether the rule is "necessary or appropriate in the public interest or for the protection of investors."[324] Section 202(c)(1) of the Advisers Act requires the Commission, when engaging in rulemaking that

[317] 17 CFR 275.0–7(a).

[318] Based on IARD data.

[319] *See supra* note 206 and accompanying text for explanation of the estimate.

[320] These advisers report a larger number of clients than the average number of clients for the subset of advisers that are subject to the surprise examination for only a portion (estimated at 5%) of their clients.

[321] These advisers report a smaller number of clients than the average number of clients for the subset of advisers that are subject to the surprise examination for only a portion (estimated at 5%) of their clients.

[322] Based on IARD data, we estimate that more than half (43) of the 73 small advisers will be subject to the surprise examination with respect to no more than 6 clients.

[323] For the four small entity advisers that may be subject to the surprise examination with respect to 100% of their clients, we believe the cost will be significantly less than the $125,000 annual fee estimated for the 337 advisers. Based on IARD data, we estimate that the average number of clients for these advisers would be 120 rather than the 2,315 we estimate for other advisers that are in the same group. *See supra* note 176 and accompanying text for explanation of our estimate of average number of clients for the 337 advisers.

[324] 15 U.S.C. 80b–4(a).

requires it to consider or determine whether an action is necessary or appropriate in the public interest, to consider, in addition to the protection of investors, whether the action will promote efficiency, competition, and capital formation.[325] In the Proposing Release, we solicited comment on whether, if adopted, the proposed rule and form amendments would promote efficiency, competition and capital formation. We further encouraged commenters to provide empirical data to support their views on any burdens on efficiency, competition or capital formation that might result from adoption of the proposed amendments. We did not receive any empirical data in this regard concerning the proposed amendments. We received some general comments asserting that the proposed amendments to require a surprise examination for advisers with custody of client assets as a result of deducting advisory fees from client accounts would have a significant adverse impact on competition.[326]

We believe the amendments we are adopting today to rule 204–2, Part 1A of Form ADV and Form ADV–E in connection with amendments to rule 206(4)–2, which are substantively similar to those we proposed, will promote efficiency and competition, but have little or no effect on capital formation.

The amendments to Part 1A of Form ADV are designed to provide us with additional details concerning the custody practices of advisers registered with the Commission, and to provide additional data to assist in our risk-based examination program. Under the amendments to Form ADV–E, the form and attached accountant's certificate will be filed electronically on the IARD system. In addition, the rule requires the accountant performing an annual surprise examination to, upon the accountant's termination or dismissal, or removal from consideration for reappointment, file Form ADV–E within 4 business days accompanied by a statement explaining any problems relating to examination scope or procedure that contributed to the resignation, dismissal, removal, or other termination. Both Part 1A of Form ADV and Form ADV–E will be available to the public on the Commission's web site.

Public availability of more detailed disclosure of advisers' custodial practices will permit investors to use this information together with other information they obtain from Form ADV in making more informed decisions about whether to hire or retain a particular adviser. A more informed investing public will create a more efficient marketplace and strengthen competition among advisers. Moreover, the electronic filing requirements are expected to expedite and simplify the process of filing Form ADV–E and attached accountant's certificate with the Commission, thus further improving efficiency. We believe, however, that the amendments are unrelated to, and will have little or no effect on, capital formation.

We are amending rule 204–2 to require (i) that, if an independent custodian does not maintain client assets but the adviser or a related person instead serves as a qualified custodian for client funds or securities under the rule in connection with advisory services the adviser provides to clients, the adviser must maintain a copy of any internal control report obtained or received pursuant to amended rule 206(4)–2(a)(6), and (ii) the memorandum describing the basis upon which the adviser determined that the presumption that a related person is not operationally independent was overcome, pursuant to amended rule 206(4)–2(d)(5) for five years from the end of the fiscal year in which, as applicable, the internal control report or memorandum is finalized.[327] The amendment is designed to provide our examiners important information about the safeguards in place and assess custody-related risks at an adviser or a related person that maintains client assets. We believe that these amendments will not materially increase the compliance burden on advisers under rule 204–2 and thus will not affect competition, efficiency and capital formation.

[325] 15 U.S.C. 80b–2(c). We are adopting amendments to rule 206(4)–2 pursuant to our authority set forth in Sections 206(4) and 211(a) of the Advisers Act, neither of which requires us to consider the factors indentified in Section 202(c). Analysis of the effects of these amendments is contained in Sections IV, V, and VI above.

[326] *See, e.g.,* ASG Letter; Ameritrade Letter. The amended rule excludes from the surprise examination requirement advisers that have custody of client assets because of deducting advisory fees from client accounts. *See* amended rule 206(4)–2(b)(3).

[327] Rule 206(4)–2 requires that if an independent custodian does not maintain client assets but the adviser or a related person instead serves as a qualified custodian for client funds or securities under the rule in connection with advisory services the adviser provides to clients, the adviser must obtain, or receive from the related person, no less frequently than once each calendar year an internal control report, which includes an opinion from an independent public accountant with respect to the adviser's or related person's controls relating to custody of client assets. *See* amended rule 206(4)–2(a)(6)(ii).

VIII. Statutory Authority

We are adopting amendments to rule 206(4)–2 (17 CFR 275.206(4)–2) pursuant to our authority set forth in sections 206(4) and 211(a) of the Advisers Act (15 U.S.C. 80b–6(4) and 80b–11(a)). We are adopting amendments to rule 204–2 pursuant to the authority set forth in sections 204 and 211 of the Advisers Act (15 U.S.C. 80b–4 and 80b–11). We are adopting amendments to Part 1 of Form ADV (17 CFR 279.1) pursuant to our authority set forth in sections 203(c)(1), 204, and 211(a) of the Advisers Act (15 U.S.C. 80b–3(c)(1), 80b–4 and 80b–11(a)). We are adopting amendment to Form ADV–E (17 CFR 279.8) pursuant to our authority set forth in sections 204, 206(4), and 211(a) of the Advisers Act (15 U.S.C. 80b–4, 80b–6(4), and 80b–11(a)).

List of Subjects in 17 CFR Parts 275 and 279

Reporting and recordkeeping requirements, Securities.

Text of Rule and Form Amendments

■ For the reasons set out in the preamble, Title 17, Chapter II of the Code of Federal Regulations is amended as follows.

PART 275—RULES AND REGULATIONS, INVESTMENT ADVISERS ACT OF 1940

■ 1. The authority citation for Part 275 continues to read in part as follows:

Authority: 15 U.S.C. 80b–2(a)(11)(G), 80b–2(a)(17), 80b–3, 80b–4, 80b–4a, 80b–6(4), 80b–6a, and 80b–11, unless otherwise noted.

* * * * *

■ 2. Section 275.204–2 is amended by:

■ a. Removing "in effect, and" at the end of paragraph (a)(17)(i) and adding in its place "in effect;" ;

■ b. Removing the period at the end of paragraph (a)(17)(ii) and adding in its place a semicolon;

■ c. Adding paragraph (a)(17)(iii); and

■ d. Adding paragraph (b)(5).

The addition reads as follows:

§ 275.204–2 Books and records to be maintained by investment advisers.

(a) * * *

(17) * * *

(iii) A copy of any internal control report obtained or received pursuant to § 275. 206(4)–2(a)(6)(ii).

(b) * * *

(5) A memorandum describing the basis upon which you have determined that the presumption that any related person is not operationally independent

under § 275.206(4)–2(d)(5) has been overcome.

* * * * *

■ 3. Section 275.206(4)–2 is revised to read as follows:

§ 275.206(4)–2 Custody of funds or securities of clients by investment advisers.

(a) *Safekeeping required.* If you are an investment adviser registered or required to be registered under section 203 of the Act (15 U.S.C. 80b–3), it is a fraudulent, deceptive, or manipulative act, practice or course of business within the meaning of section 206(4) of the *Act (15 U.S.C. 80b–6(4))* for you to have custody of client funds or securities unless:

(1) *Qualified custodian.* A qualified custodian maintains those funds and securities:

(i) In a separate account for each client under that client's name; or

(ii) In accounts that contain only your clients' funds and securities, under your name as agent or trustee for the clients.

(2) *Notice to clients.* If you open an account with a qualified custodian on your client's behalf, either under the client's name or under your name as agent, you notify the client in writing of the qualified custodian's name, address, and the manner in which the funds or securities are maintained, promptly when the account is opened and following any changes to this information. If you send account statements to a client to which you are required to provide this notice, include in the notification provided to that client and in any subsequent account statement you send that client a statement urging the client to compare the account statements from the custodian with those from the adviser.

(3) *Account statements to clients.* You have a reasonable basis, after due inquiry, for believing that the qualified custodian sends an account statement, at least quarterly, to each of your clients for which it maintains funds or securities, identifying the amount of funds and of each security in the account at the end of the period and setting forth all transactions in the account during that period.

(4) *Independent verification.* The client funds and securities of which you have custody are verified by actual examination at least once during each calendar year, except as provided below, by an independent public accountant, pursuant to a written agreement between you and the accountant, at a time that is chosen by the accountant without prior notice or announcement to you and that is irregular from year to year. The written agreement must provide for the first examination to occur within six months of becoming subject to this paragraph, except that, if you maintain client funds or securities pursuant to this section as a qualified custodian, the agreement must provide for the first examination to occur no later than six months after obtaining the internal control report. The written agreement must require the accountant to:

(i) File a certificate on Form ADV–E (17 CFR 279.8) with the Commission within 120 days of the time chosen by the accountant in paragraph (a)(4) of this section, stating that it has examined the funds and securities and describing the nature and extent of the examination;

(ii) Upon finding any material discrepancies during the course of the examination, notify the Commission within one business day of the finding, by means of a facsimile transmission or electronic mail, followed by first class mail, directed to the attention of the Director of the Office of Compliance Inspections and Examinations; and

(iii) Upon resignation or dismissal from, or other termination of, the engagement, or upon removing itself or being removed from consideration for being reappointed, file within four business days Form ADV–E accompanied by a statement that includes:

(A) The date of such resignation, dismissal, removal, or other termination, and the name, address, and contact information of the accountant; and

(B) An explanation of any problems relating to examination scope or procedure that contributed to such resignation, dismissal, removal, or other termination.

(5) *Special rule for limited partnerships and limited liability companies.* If you or a related person is a general partner of a limited partnership (or managing member of a limited liability company, or hold a comparable position for another type of pooled investment vehicle), the account statements required under paragraph (a)(3) of this section must be sent to each limited partner (or member or other beneficial owner).

(6) *Investment advisers acting as qualified custodians.* If you maintain, or if you have custody because a related person maintains, client funds or securities pursuant to this section as a qualified custodian in connection with advisory services you provide to clients:

(i) The independent public accountant you retain to perform the independent verification required by paragraph (a)(4) of this section must be registered with, and subject to regular inspection as of the commencement of the professional engagement period, and as of each calendar year-end, by, the Public Company Accounting Oversight Board in accordance with its rules; and

(ii) You must obtain, or receive from your related person, within six months of becoming subject to this paragraph and thereafter no less frequently than once each calendar year a written internal control report prepared by an independent public accountant:

(A) The internal control report must include an opinion of an independent public accountant as to whether controls have been placed in operation as of a specific date, and are suitably designed and are operating effectively to meet control objectives relating to custodial services, including the safeguarding of funds and securities held by either you or a related person on behalf of your advisory clients, during the year;

(B) The independent public accountant must verify that the funds and securities are reconciled to a custodian other than you or your related person; and

(C) The independent public accountant must be registered with, and subject to regular inspection as of the commencement of the professional engagement period, and as of each calendar year-end, by, the Public Company Accounting Oversight Board in accordance with its rules.

(7) *Independent representatives.* A client may designate an independent representative to receive, on his behalf, notices and account statements as required under paragraphs (a)(2) and (a)(3) of this section.

(b) *Exceptions.* (1) *Shares of mutual funds.* With respect to shares of an open-end company as defined in section 5(a)(1) of the Investment Company Act of 1940 (15 U.S.C. 80a–5(a)(1)) ("mutual fund"), you may use the mutual fund's transfer agent in lieu of a qualified custodian for purposes of complying with paragraph (a) of this section.

(2) *Certain privately offered securities.* (i) You are not required to comply with paragraph (a)(1) of this section with respect to securities that are:

(A) Acquired from the issuer in a transaction or chain of transactions not involving any public offering;

(B) Uncertificated, and ownership thereof is recorded only on the books of the issuer or its transfer agent in the name of the client; and

(C) Transferable only with prior consent of the issuer or holders of the outstanding securities of the issuer.

(ii) Notwithstanding paragraph (b)(2)(i) of this section, the provisions of this paragraph (b)(2) are available with

respect to securities held for the account of a limited partnership (or a limited liability company, or other type of pooled investment vehicle) only if the limited partnership is audited, and the audited financial statements are distributed, as described in paragraph (b)(4) of this section.

(3) *Fee deduction.* Notwithstanding paragraph (a)(4) of this section, you are not required to obtain an independent verification of client funds and securities maintained by a qualified custodian if:

(i) you have custody of the funds and securities solely as a consequence of your authority to make withdrawals from client accounts to pay your advisory fee; and

(ii) if the qualified custodian is a related person, you can rely on paragraph (b)(6) of this section.

(4) *Limited partnerships subject to annual audit.* You are not required to comply with paragraphs (a)(2) and (a)(3) of this section and you shall be deemed to have complied with paragraph (a)(4) of this section with respect to the account of a limited partnership (or limited liability company, or another type of pooled investment vehicle) that is subject to audit (as defined in rule 1–02(d) of Regulation S–X (17 CFR 210.1–02(d))):

(i) At least annually and distributes its audited financial statements prepared in accordance with generally accepted accounting principles to all limited partners (or members or other beneficial owners) within 120 days of the end of its fiscal year;

(ii) By an independent public accountant that is registered with, and subject to regular inspection as of the commencement of the professional engagement period, and as of each calendar year-end, by, the Public Company Accounting Oversight Board in accordance with its rules; and

(iii) Upon liquidation and distributes its audited financial statements prepared in accordance with generally accepted accounting principles to all limited partners (or members or other beneficial owners) promptly after the completion of such audit.

(5) *Registered investment companies.* You are not required to comply with this section (17 CFR 275.206(4)–2) with respect to the account of an investment company registered under the Investment Company Act of 1940 (15 U.S.C. 80a–1 to 80a–64).

(6) *Certain Related Persons.* Notwithstanding paragraph (a)(4) of this section, you are not required to obtain an independent verification of client funds and securities if:

(i) you have custody under this rule solely because a related person holds, directly or indirectly, client funds or securities, or has any authority to obtain possession of them, in connection with advisory services you provide to clients; and

(ii) your related person is operationally independent of you.

(c) *Delivery to Related Person.* Sending an account statement under paragraph (a)(5) of this section or distributing audited financial statements under paragraph (b)(4) of this section shall not satisfy the requirements of this section if such account statements or financial statements are sent solely to limited partners (or members or other beneficial owners) that themselves are limited partnerships (or limited liability companies, or another type of pooled investment vehicle) and are your related persons.

(d) *Definitions.* For the purposes of this section:

(1) *Control* means the power, directly or indirectly, to direct the management or policies of a person, whether through ownership of securities, by contract, or otherwise. Control includes:

(i) Each of your firm's officers, partners, or directors exercising executive responsibility (or persons having similar status or functions) is presumed to control your firm;

(ii) A person is presumed to control a corporation if the person:

(A) Directly or indirectly has the right to vote 25 percent or more of a class of the corporation's voting securities; or

(B) Has the power to sell or direct the sale of 25 percent or more of a class of the corporation's voting securities;

(iii) A person is presumed to control a partnership if the person has the right to receive upon dissolution, or has contributed, 25 percent or more of the capital of the partnership;

(iv) A person is presumed to control a limited liability company if the person:

(A) Directly or indirectly has the right to vote 25 percent or more of a class of the interests of the limited liability company;

(B) Has the right to receive upon dissolution, or has contributed, 25 percent or more of the capital of the limited liability company; or

(C) Is an elected manager of the limited liability company; or

(v) A person is presumed to control a trust if the person is a trustee or managing agent of the trust.

(2) *Custody* means holding, directly or indirectly, client funds or securities, or having any authority to obtain possession of them. You have custody if a related person holds, directly or indirectly, client funds or securities, or has any authority to obtain possession of them, in connection with advisory services you provide to clients. Custody includes:

(i) Possession of client funds or securities (but not of checks drawn by clients and made payable to third parties) unless you receive them inadvertently and you return them to the sender promptly but in any case within three business days of receiving them;

(ii) Any arrangement (including a general power of attorney) under which you are authorized or permitted to withdraw client funds or securities maintained with a custodian upon your instruction to the custodian; and

(iii) Any capacity (such as general partner of a limited partnership, managing member of a limited liability company or a comparable position for another type of pooled investment vehicle, or trustee of a trust) that gives you or your supervised person legal ownership of or access to client funds or securities.

(3) *Independent public accountant* means a public accountant that meets the standards of independence described in rule 2–01(b) and (c) of Regulation S–X (17 CFR 210.2–01(b) and (c)).

(4) *Independent representative* means a person that:

(i) Acts as agent for an advisory client, including in the case of a pooled investment vehicle, for limited partners of a limited partnership (or members of a limited liability company, or other beneficial owners of another type of pooled investment vehicle) and by law or contract is obliged to act in the best interest of the advisory client or the limited partners (or members, or other beneficial owners);

(ii) Does not control, is not controlled by, and is not under common control with you; and

(iii) Does not have, and has not had within the past two years, a material business relationship with you.

(5) *Operationally independent:* for purposes of paragraph (b)(6) of this section, a related person is presumed not to be operationally independent unless each of the following conditions is met and no other circumstances can reasonably be expected to compromise the operational independence of the related person: (i) Client assets in the custody of the related person are not subject to claims of the adviser's creditors; (ii) advisory personnel do not have custody or possession of, or direct or indirect access to client assets of which the related person has custody, or the power to control the disposition of

such client assets to third parties for the benefit of the adviser or its related persons, or otherwise have the opportunity to misappropriate such client assets; (iii) advisory personnel and personnel of the related person who have access to advisory client assets are not under common supervision; and (iv) advisory personnel do not hold any position with the related person or share premises with the related person.

(6) *Qualified custodian* means:

(i) A bank as defined in section 202(a)(2) of the Advisers Act (15 U.S.C. 80b–2(a)(2)) or a savings association as defined in section 3(b)(1) of the Federal Deposit Insurance Act (12 U.S.C. 1813(b)(1)) that has deposits insured by the Federal Deposit Insurance Corporation under the Federal Deposit Insurance Act (12 U.S.C. 1811);

(ii) A broker-dealer registered under section 15(b)(1) of the Securities Exchange Act of 1934 (15 U.S.C. 78o(b)(1)), holding the client assets in customer accounts;

(iii) A futures commission merchant registered under section 4f(a) of the Commodity Exchange Act (7 U.S.C. 6f(a)), holding the client assets in customer accounts, but only with respect to clients' funds and security futures, or other securities incidental to transactions in contracts for the purchase or sale of a commodity for future delivery and options thereon; and

(iv) A foreign financial institution that customarily holds financial assets for its customers, provided that the foreign financial institution keeps the advisory clients' assets in customer accounts segregated from its proprietary assets.

(7) *Related person* means any person, directly or indirectly, controlling or controlled by you, and any person that is under common control with you.

PART 279—FORMS PRESCRIBED UNDER THE INVESTMENT ADVISERS ACT OF 1940

■ 4. The authority citation for Part 279 continues to read as follows:

Authority: The Investment Advisers Act of 1940, 15 U.S.C. 80b–1, *et seq.*

■ 5. Form ADV (referenced in § 279.1) is amended by:

■ a. In the General Instructions, revising the first bullet and last paragraph of instruction 4;

■ b. In Part 1A, revising the last paragraph of Item 7.A. and revising Item 9; and

■ c. In Schedule D, revising Section 7.A., and adding Sections 9.C. and 9.D.

The revisions read as follows:

Note: The text of Form ADV does not and this amendment will not appear in the Code of Federal Regulations.

BILLING CODE 8011–01–P

Form ADV

* * * * *

Form ADV: General Instructions

* * * * *

4. * * *

- information you provided in response to Items 1, 3, 9 (except 9.A.(2), 9.B.(2), and 9.(E)), or 11 of Part 1A or Items 1, 2.A. through 2.F., or 2.I. of Part 1B becomes inaccurate in any way;

* * * * *

If you are submitting an other-than-annual amendment, you are not required to update your responses to Items 2, 5, 6, 7, 9.A.(2), 9.B.(2), 9.E., or 12 of Part 1A or Items 2.H. or 2.J. of Part 1B even if your responses to those items have become inaccurate. If you are amending Part II, do not file the amendment with the SEC.

* * * * *

Part 1A

* * * * *

Item 7 Financial Industry Affiliates

* * * * *

A. * * *

If you checked Items 7.A.(1) or (3), you must list on Section 7.A. of Schedule D all your *related persons* that are investment advisers, broker-dealers, municipal securities dealers, or government securities broker or dealers.

* * * * *

Item 9 Custody

In this Item, we ask you whether you or a *related person* has *custody* of *client* assets and about your custodial practices.

A. (1) Do you have *custody* of any advisory *clients'*:

		Yes	No
(a)	cash or bank accounts?	☐	☐
(b)	securities?	☐	☐

If you are registering or registered with the SEC, answer "No" to Item 9.A.(1)(a) and (b) if you have custody solely because (i) you deduct your advisory fees directly from your clients' accounts, or (ii) a related person maintains client funds or securities as a qualified custodian but you have overcome the presumption that you are not operationally independent (pursuant to Advisers Act rule 206(4)(2)-(d)(5)) from the related person.

(2) If you checked "yes" to Item 9.A.(1)(a) or (b), what is the amount of *client* funds and securities and total number of *clients* for which you have *custody*:

U.S. Dollar Amount — Total Number of *Clients*

(a) $_____ (b) _____

If your related person serves as qualified custodian of client assets, do not include the amount of those assets and the number of those clients in your response to Item 9.A.(2). Instead, include that information in your response to Item 9.B.(2).

B. (1) Do any of your *related persons* have *custody* of any of your advisory *clients'*:

		Yes	No
(a)	cash or bank accounts?	☐	☐
(b)	securities?	☐	☐

You are required to answer this item regardless of how you answered Item 9.A.(1)(a) or (b).

(2) If you checked "yes" to Item 9.B.(1)(a) or (b), what is the amount of *client* funds and securities and total number of *clients* for which your *related persons* have *custody*:

U.S. Dollar Amount — Total Number of *Clients*

(a) $_____ (b) _____

C. If you or your *related persons* have *custody* of *client* funds or securities, check all the following that apply:

☐ (1) A qualified custodian(s) sends account statements at least quarterly to the investors in the pooled investment vehicle(s) you manage.

☐ (2) An independent public accountant audits annually the pooled investment vehicle(s) that you manage and the audited financial statements are distributed to the investors in the pools.

☐ (3) An independent public accountant conducts an annual surprise examination of *client* funds and securities.

☐ (4) An independent public accountant prepares an internal control report with respect to custodial services when you or your *related persons* are qualified custodians for *client* funds and securities.

If you checked Item 9.C.(2), C.(3) or C.(4), list in Section 9.C. of Schedule D the accountants that are engaged to perform the audit or examination or prepare an internal control report.

D. Do you or your *related persons* act as qualified custodians for your *clients* in connection with advisory services you provide to *clients*?

		Yes	No
(1)	you act as a qualified custodian	☐	☐
(2)	your related persons act as qualified custodians	☐	☐

If you checked "yes" to Item 9.D.(2), list in Section 9.D. of Schedule D all your related persons that act as qualified custodians for your clients in connection with advisory services you provide to clients (you do not have to list broker-dealers already identified as qualified custodians in Section 7.A. of Schedule D).

E. If you are filing your annual updating amendment and you were subject to a surprise examination by an independent public accountant during your last fiscal year, provide the date (MM/YYYY) the examination commenced: _____

* * * * *

Schedule D

* * * * *

SECTION 7.A. Affiliated Investment Advisers and Broker-Dealers

You must complete the following information for each *related person* investment adviser and broker-dealer. You must complete a separate Schedule D Page 3 for each listed *related person*.

Check only one box: ☐ Add ☐ Delete ☐ Amend

Legal Name of *Related Person*:

_____

Primary Business Name of *Related Person*:

_____

Related person is (check only one box): ☐ Investment Adviser ☐ Broker-Dealer ☐ Dual (Investment Adviser and Broker-Dealer)

If the *related person* is a broker-dealer, is it a qualified custodian for your *clients* in connection with advisory services you provide to *clients*? Yes ☐ No ☐

If you are registering or registered with the SEC and you have answered "yes," have you overcome the presumption that you are not operationally independent (pursuant to Advisers Act rule 206(4)(2)-(d)(5)) from the *related person* broker-dealer, and thus are not required to obtain a surprise examination for your *clients'* funds or securities that are maintained at the *related person*?
Yes ☐ No ☐

Related Person Adviser's SEC File Number (if any) 801-_____
Related Person's CRD Number (if any): _____

* * * * *

SECTION 9.C. Independent Public Accountant

You must complete the following information for each independent public accountant engaged to perform a surprise examination, perform an audit of a pooled investment vehicle that you manage, or prepare an internal control report. You must complete a separate Schedule D Page 4 for each independent public accountant.

Check only one box: ☐ Add ☐ Delete ☐ Amend

(1) Name of the independent public accountant:

_____

(2) The location of the independent public accountant's office responsible for the services provided:

_____
(number and street)

_____
(city) (state/country) (zip+4/postal code)

(3) Is the independent public accountant registered with the Public Company Accounting Oversight Board? Yes ☐ No ☐

(4) If yes to (3) above, is the independent public accountant subject to regular inspection by the Public Company Accounting Oversight Board in accordance with its rules? Yes ☐ No ☐

(5) The independent public accountant is engaged to:

A. ☐ audit a pooled investment vehicle
B. ☐ perform a surprise examination of *client* assets
C. ☐ prepare an internal control report

(6) Does the report prepared by the independent public accountant that audited the pooled investment vehicle or that examined internal controls contain an unqualified opinion?
Yes ☐ No ☐

SECTION 9.D. *Related Person* Qualified Custodian

You must complete the following information for each of your *related persons* that acts as a qualified custodian for your *clients* in connection with advisory services you provide to *clients* (you do not have to list broker-dealers already identified as qualified custodians in Section 7.A. of Schedule D). You must complete a separate Schedule D Page 5 for each listed *related person*.

Check only one box: ☐ Add ☐ Delete ☐ Amend

Legal Name of *Related Person*:

_____

Primary Business Name of *Related Person*:

_____

The location of the *related person*'s office responsible for custody of your *clients*' assets:

_____
(number and street)

_____
(city) (state/country) (zip+4/postal code)

Related Person is (check only one box):

☐ U.S. Bank or Savings Association
☐ Futures Commission Merchant
☐ Foreign Financial Institution

If you are registering or registered with the SEC, have you overcome the presumption that you are not operationally independent (pursuant to Advisers Act rule 206(4)(2)-(d)(5)) from the *related person* qualified custodian, and thus are not required to obtain a surprise examination for your *clients'* funds or securities that are maintained at the *related person*? Yes ☐ No ☐

* * * * *

BILLING CODE 8011–01–C

■ 6. Form ADV–E (referenced in § 279.8) is amended by revising the instructions to the Form.

The revisions read as follows:

Note: The text of Form ADV–E does not and this amendment will not appear in the Code of Federal Regulations.

Form ADV–E

* * * * *

Instructions

This Form must be completed by investment advisers that have custody of client funds or securities and that are subject to an annual surprise examination. This Form may *not* be used to amend any information included in an investment adviser's registration statement (*e.g.*, business address).

Investment Adviser

1. All items must be completed by the investment adviser.

2. Give this Form to the independent public accountant that, in compliance with rule 206(4)–2 under the Investment Advisers Act of 1940 (the "Act") or applicable state law, examines client funds and securities in the custody of the investment adviser within 120 days of the time chosen by the accountant for the surprise examination and upon such accountant's resignation or dismissal from, or other termination of, the engagement, or if the accountant removes itself or is removed from consideration for being reappointed.

Accountant

3. The independent public accountant performing the surprise examination must submit (i) this Form and a certificate of accounting required by rule 206(4)–2 under the Act or applicable state law within 120 days of the time chosen by the accountant for the surprise examination, and (ii) this Form and a statement, within four business days of its resignation or dismissal from, or other termination of, the engagement, or removing itself or being removed from consideration for being reappointed, that includes (A) the date of such resignation, dismissal, removal, or other termination, and the name, address, and contact information of the accountant, and (B) an explanation of any problems relating to examination scope or procedure that contributed to such resignation, dismissal, removal, or other termination:

(a) By mail, until the Investment Adviser Registration Depository ("IARD") accepts electronic filing of the Form, to the Securities and Exchange Commission or appropriate state securities administrators. File the original and one copy with the Securities and Exchange Commission's principal office in Washington, DC at the address on the top of this Form, and one copy with the regional office for the region in which the investment adviser's principal business operations are conducted, or one copy with the appropriate state administrator(s), if applicable; or

(b) By electronic filing of the certificate of accounting and statement regarding resignation, dismissal, other termination, or removal from consideration for reappointment on the IARD, when the IARD accepts electronic filing of the Form.

* * * * *

Dated: December 30, 2009.

By the Commission.

Florence E. Harmon,

Deputy Secretary.

[FR Doc. 2010–18 Filed 1–8–10; 8:45 am]

BILLING CODE 8011–01–P

SECURITIES AND EXCHANGE COMMISSION

17 CFR Parts 276

[Release Nos. IA–2969; FR–81]

Commission Guidance Regarding Independent Public Accountant Engagements Performed Pursuant to Rule 206(4)–2 Under the Investment Advisers Act of 1940

AGENCY: Securities and Exchange Commission.

ACTION: Interpretation.

SUMMARY: The Securities and Exchange Commission (the "Commission") is publishing interpretive guidance for independent public accountants in connection with the adoption of amendments to Rule 206(4)–2 under the Investment Advisers Act of 1940 (the "Custody Rule"). This guidance provides direction with respect to the independent verification and internal control report as required under the amended Custody Rule.

DATES: Effective Date March 12, 2010.

FOR FURTHER INFORMATION CONTACT: General questions about this release should be referred to Bryan J. Morris, Assistant Chief Accountant, Jaime L. Eichen, Assistant Chief Accountant, or Richard F. Sennett, Chief Accountant at (202) 551–6918 or *IMOCA@sec.gov*, Office of the Chief Accountant, Division of Investment Management, U.S. Securities and Exchange Commission, 100 F Street, NE., Washington, DC 20549–8626. Questions about Rule 206(4)–2 should be directed to staff of the Office of Investment Adviser Regulation, Division of Investment Management, U.S. Securities and Exchange Commission, 100 F Street, NE., Washington, DC 20549–8549 at (202) 551–6787 or *IArules@sec.gov*.

SUPPLEMENTARY INFORMATION:

I. Background

Rule 206(4)–2(a) under the Investment Advisers Act of 1940 (the "Act") provides, among other things, that it is a fraudulent, deceptive or manipulative act, practice, or course of business within the meaning of Section 206(4) of the Act for any investment adviser registered (or required to be registered) under Section 203 of the Act (herein "investment adviser") to have custody of client funds or securities unless:

(1) A qualified custodian maintains those funds and securities in a separate account for each client under that client's name; or in accounts that contain only clients' funds and securities, under the investment adviser's name as agent or trustee for the clients;

(2) Clients are notified promptly in writing of the qualified custodian's name, address, and the manner in which the funds or securities are maintained, when an account is opened by an investment adviser on a client's behalf and following any changes to this information; and

(3) The investment adviser has a reasonable basis, after due inquiry, for believing that the qualified custodian sends an account statement, at least quarterly, to each of its clients for which it maintains funds or securities, identifying the amount of funds and of each security in the account at the end of the period and setting forth all transactions in the account during that period.

Rule 206(4)–2(a) generally requires that client funds and securities of which an investment adviser has custody under the rule be verified by actual examination at least once during each calendar year by an independent public accountant [1] ("accountant"), pursuant to a written agreement, between the investment adviser and the accountant, at a time that is chosen by the accountant without prior notice or announcement to the investment

[1] If the investment adviser itself or a related person maintains clients' funds and securities as qualified custodian, the independent public accountant must be registered with, and subject to inspection by, the Public Company Accounting Oversight Board ("PCAOB"). *See* Rule 206(4)–2(a)(6)(i).

adviser and that is irregular from year to year.

II. Independent Verification of Funds and Securities

The objective of the accountant's examination [2] is to verify that client funds and securities of which an investment adviser has custody are held by a qualified custodian in a separate account for each client under that client's name, or in accounts that contain only clients' funds and securities, under the investment adviser's name as agent or trustee for the clients. The accountant should obtain from the investment adviser records that detail client funds and securities of which the investment adviser has custody and the identification of the qualified custodian(s) of those funds and securities.[3] The accountant should also obtain records of accounts that were closed during the period or that have a zero balance as of the date of the examination.

For a sample of client accounts, the accountant should obtain records of the purchases, sales, contributions, withdrawals and any other debits or credits to each selected client's account occurring since the date of the last examination. The accountant's procedures to meet the objective of the examination should normally include, but are not limited to, the following with respect to each selected client account:

- Confirmation with the qualified custodian(s) of client funds and securities as of the date of the examination and that the client's funds and securities are held in either a separate account under the client's name or in accounts under the name of the investment adviser as agent or trustee for clients;
- Confirmation with the client of funds and securities held in the account as of the date of the examination and contributions and withdrawals of funds and securities to and from the account since the date of the last examination; where confirmation replies are not received, the accountant should perform alternative procedures; and
- Reconciliation of confirmations received and other evidence obtained to the investment adviser's records.

Privately Offered Securities

Rule 206(4)–(2)(b)(2) generally exempts privately offered securities from the qualified custodian requirements established under Rule 206(4)–(2)(a)(1).[4] Under the rule, a privately offered security is a security that is:

(1) Acquired from the issuer in a transaction or chain of transactions not involving any public offering;

(2) Uncertificated, and ownership thereof is recorded only on the books of the issuer or its transfer agent in the name of the client; and

(3) Transferable only with prior consent of the issuer or holders of the outstanding securities of the issuer.

The accountant's verification procedures with respect to any privately offered security selected for testing should include confirmation with the issuer of or counterparty to the security, or, where replies are not received, alternative procedures.

Reporting—Independent Verification

The accountant's examination report should include an opinion as to whether, with respect to the rules under the Act, the investment adviser was in compliance, in all material respects, with paragraph (a)(1) of Rule 206(4)–2 as of the examination date and had been complying with Rule 204–2(b) during the period since the prior examination date. The accountant should identify the date as of which the examination was made within the report.

Pursuant to the written agreement required under Rule 206(4)–2(a)(4), upon finding any material discrepancy during the course of the examination, the accountant should notify the Commission within one business day of the finding, by means of a facsimile transmission or electronic mail, followed by first class mail, directed to the attention of the Director of the Office of Compliance Inspections and Examinations. For purposes of this examination, a material discrepancy is material non-compliance with the provisions of either Rule 206(4)–2 or Rule 204–2(b) under the Act.[5]

Pursuant to the written agreement required under Rule 206(4)–2(a)(4), the examination should be completed and the resulting examination report should be filed on Form ADV–E by the accountant within 120 days of the time chosen by the accountant. The accountant should also file Form ADV–E with the Commission upon resignation or dismissal from, or other termination of, the engagement, or upon removing itself or being removed from consideration for being reappointed within four business days. Such filing should be accompanied by a statement that includes:

(1) The date of such resignation, dismissal, removal, or other termination, and the name, address, and contact information of the accountant; and

(2) An explanation of any problems relating to examination scope or procedure that contributed to such resignation, dismissal, removal, or other termination.

III. Internal Control Report

Rule 206(4)–2(a)(6) establishes additional requirements for an investment adviser that itself, or its related person, maintains client funds or securities as a qualified custodian in connection with advisory services provided to clients. Such an investment adviser must at least once each calendar year obtain or receive from its related person an internal control report related to its or its affiliates' custody services, including the safeguarding of funds and securities, prepared by an independent public accountant that is registered with, and subject to inspection by, the PCAOB.[6]

The objective of the examination supporting the internal control report is to obtain reasonable assurance that the qualified custodian's controls have been placed in operation as of a specific date, and are suitably designed and are operating effectively to meet control objectives related to custody of funds and securities during the period specified. The internal control report should address control objectives and associated controls related to the areas of client account setup and

[2] The examination is a compliance examination to be conducted in accordance with American Institute of Certified Public Accountants' ("AICPA") attestation standards. *See* AT Section 601, *Compliance Attestation* ("AT 601").

[3] Rule 204–2(b) under the Act requires that an investment adviser who has custody or possession of funds and securities of any client must record all transactions for such client in a journal and in separate ledger accounts for each client and must maintain copies of confirmations of all transactions in such accounts and a position record for each security in which a client has an interest. Rule 204–2(h) of the Act indicates that records maintained and preserved in compliance with Rules 17a–3 and 17a–4 under the Securities Exchange Act of 1934 (i.e., records maintained by a broker-dealer) can be deemed to satisfy the requirements of Rule 204–2(b), provided that they are substantially the same types of records. *See* Rule 204–2(b) and Rule 204–2(h) under the Act.

[4] The exemption provided by the rule is available with respect to securities held for the account of a limited partnership (or a limited liability company, or other type of pooled investment vehicle) only if the limited partnership is audited, and the audited financial statements are distributed, as described in paragraph (b)(4) of the rule.

[5] Reporting on material non-compliance is discussed within AT 601 of the AICPA attestation standards. *See* AT 601.

[6] A Type II SAS 70 Report conducted in accordance with AU Section 324, *Service Organizations* ("AU 324") of the AICPA auditing standards would be sufficient to satisfy the requirements of the internal control report. In addition to the Type II SAS 70 Report, an examination on internal control conducted in accordance with AT 601 would also be sufficient.

maintenance, authorization and processing of client transactions, security maintenance and setup, processing of income and corporate action transactions, reconciliation of funds and securities to depositories and other unaffiliated custodians, and client reporting. Control objectives addressing these areas should include—

- Documentation for the opening and modification of client accounts is received, authenticated, and established completely, accurately, and timely on the applicable system.
- Client transactions, including contributions and withdrawals, are authorized and processed in a complete, accurate, and timely manner.
- Trades are properly authorized, settled, and recorded completely, accurately, and timely in the client account.
- New securities and changes to securities are authorized and established in a complete, accurate and timely manner.
- Securities income and corporate action transactions are processed to client accounts in a complete, accurate, and timely manner.
- Physical securities are safeguarded from loss or misappropriation.
- Cash and security positions are reconciled completely, accurately and on a timely basis between the custodian and depositories.
- Account statements reflecting cash and security positions are provided to clients in a complete, accurate and timely manner.

Rule 206(4)–2(a)(6)(ii)(B) states that, as part of the internal control report, the independent public accountant must verify that funds and securities are reconciled to a custodian other than the adviser or its related person (for example, the Depository Trust Corporation). The accountant's tests of the custodian's reconciliation(s) should include either direct confirmation, on a test basis, with unaffiliated custodians or other procedures designed to verify that the data used in reconciliations performed by the qualified custodian is obtained from unaffiliated custodians and is unaltered.

Reporting—Internal Control Report

The accountant's internal control report should identify the control objectives included within the scope of the examination and include the accountant's opinion as to whether controls have been placed in operation as of the specific date, and are suitably designed and are operating effectively to meet the identified control objectives during the specified period. The report should also describe the nature, timing, extent and results of the accountant's procedures performed to verify that funds and securities are reconciled to depositories and other unaffiliated custodians.[7]

IV. Relationship Between Independent Verification and Internal Control Report

When performing an independent verification of client funds and securities for an investment adviser that itself, or its related person, maintains custody as a qualified custodian, the accountant should obtain a copy of the most recently issued internal control report and determine whether there are any findings in the internal control report that would affect the nature and extent of his or her procedures. If findings within the internal control report indicate information provided by the qualified custodian may not be reliable, the accountant should consider whether the circumstances warrant the issuance of a qualified or adverse opinion, or a disclaimer of opinion.

If a significant period of time has elapsed since the issuance of the internal control report, the accountant should perform appropriate procedures to determine whether there have been significant changes to the procedures and controls related to custody at the qualified custodian since the date of the report. If significant changes have occurred, the accountant should perform procedures to update his or her understanding of whether the controls at the qualified custodian have been placed in operation, are suitably designed, and are operating effectively to meet the identified control objectives, as appropriate in the circumstances. The accountant can perform these procedures directly or can request that the accountant that prepared the internal control report perform such procedures.

[7] Paragraph .62 of AU 324 discusses reporting on substantive procedures as part of a Type II SAS 70 report. *See* AU 324.

V. Codification Update

The "Codification of Financial Reporting Policies" announced in Financial Reporting Release No. 1 (April 15, 1982) [47 FR 21028] is updated by replacing Section 404.01.b. *Investment Advisers* with the text in Sections I, II, III, and IV of this release. The Codification is a separate publication of the Commission. It will not be published in the **Federal Register**/Code of Federal Regulations.

List of Subjects in 17 CFR Part 276

Reporting and recordkeeping requirements, Securities.

Amendments to the Code of Federal Regulations

■ For the reasons set out in the preamble, the Commission is amending title 17, chapter II of the Code of Federal Regulations as set forth below:

PART 276—INTERPRETATIVE RELEASES RELATING TO THE INVESTMENT ADVISERS ACT OF 1940 AND GENERAL RULES AND REGULATIONS THEREUNDER

■ Part 276 is amended by adding Release No. IA–2969 and the release date of December 30, 2009 to the list of interpretive releases.

Dated: December 30, 2009.

By the Commission.

Florence E. Harmon,

Deputy Secretary.

[FR Doc. 2010–19 Filed 1–8–10; 8:45 am]

BILLING CODE 8011–01–P

Federal Register

Monday,
January 11, 2010

Part III

Department of Commerce

International Trade Administration

Certain Hot-Rolled Carbon Steel Flat Products From India: Preliminary Results of Countervailing Duty Administrative Review; Notice

DEPARTMENT OF COMMERCE

International Trade Administration

[C–533–821]

Certain Hot-Rolled Carbon Steel Flat Products From India: Preliminary Results of Countervailing Duty Administrative Review

AGENCY: Import Administration, International Trade Administration, Department of Commerce.

SUMMARY: The Department of Commerce (the Department) is conducting an administrative review of the countervailing duty (CVD) order on certain hot-rolled carbon steel flat products from India for the period of review (POR) January 1, 2008, through December 31, 2008. These preliminary results cover one company Tata Steel Limited (Tata). For the information on the net subsidy rate for the reviewed company, see the "Preliminary Results of Review" section.

DATES: *Effective Date:* January 11, 2010.

FOR FURTHER INFORMATION CONTACT: Gayle Longest, AD/CVD Operations, Office 3, Import Administration, International Trade Administration, U.S. Department of Commerce, 14th Street and Constitution Avenue, NW., Washington, DC 20230; telephone (202) 482–3338

SUPPLEMENTARY INFORMATION:

Background

On December 1, 2001, the Department published in the **Federal Register** the CVD order on certain hot-rolled carbon steel flat products from India. *See Notice of Amended Final Determination and Notice of Countervailing Duty Orders: Certain Hot-Rolled Carbon Steel Flat Products From India and Indonesia,* 66 FR 60198 (December 3, 2001). On December 1, 2008, the Department published a notice of opportunity to request an administrative review of this CVD order. *See Antidumping or Countervailing Duty Order, Finding, or Suspended Investigation; Opportunity To Request Administrative Review,* 73 FR 72764 (December 1, 2008). On December 31, 2008, U.S. Steel Corporation (Petitioner) requested that the Department conduct an administrative review of Essar Steel Limited (Essar), Ispat Industries Limited (Ispat), JSW Steel Limited (JSW), and Tata.

On February 2, 2009, the Department initiated an administrative review of the CVD order on certain hot-rolled carbon steel flat products from India, covering the period January 1, 2008, through December 31, 2008. *See Initiation of Antidumping and Countervailing Duty Administrative Reviews and Requests for Revocation in Part,* 74 FR 5821 (February 2, 2009).

On February 6, 2009, the Department issued a questionnaire to the Government of India (GOI), Essar, Ispat, JSW, and Tata. On February 6, 2009, Essar and JSW notified the Department that they had no shipments during the POR. On February 9, 2009, Ispat notified the Department that it had no shipments during the POR. On February 25, 2009, Tata notified the Department that it had no sales of commercial quantities of subject merchandise during the POR. However, Tata did acknowledge that it made certain sales during the POR. On March 11, 2009, counsel for Tata met with Department officials concerning an alleged sale by Tata to the United States that is currently on the record of the antidumping proceeding. *See* Memorandum to the File regarding "Meeting with Counsel for Tata Steel Limited," dated March 11, 2009, which is on file in the Central Records Unit (CRU) of the main Commerce Building. On March 19, 2009, Tata submitted information pertaining to an additional sale of subject merchandise from India in question during the POR. On March 23, 2009, Tata submitted additional data, as requested by the Department, which pertains to certain sales during the POR. On March 27, 2009, the Department made a finding that Tata had sales of subject merchandise during the POR and extended the due date for Tata's questionnaire response because of the confusion as to whether Tata did or did not have any sales during the POR. *See* Memorandum to the File regarding "Sales by Tata during the POR," dated March 27, 2009, which is on file in the CRU of the main Commerce Building.

On April 23, 2009, we received a questionnaire response from the GOI. As discussed below, the GOI's submission did not contain responses concerning certain programs administered by the state governments. We issued supplemental questionnaires to the GOI regarding programs addressed in the initial CVD questionnaire, including programs administered by the state governments. On August 10, 2009 and September 24, 2009, the GOI submitted responses to the supplemental questionnaires; however, it failed to respond to certain programs administered by the state governments.

On April 25, 2009, Department officials spoke with counsel for Tata regarding the company's failure to submit a questionnaire response. Tata's counsel informed the Department that the company was no longer participating in the administrative review and would not be responding to the questionnaire. *See* Memorandum to the File regarding "Phone Conversation with Counsel for Tata Steel Limited," dated April 23, 2009, which is on file in the CRU of the main Commerce Building.

On May 4, 2009, Petitioner withdrew its request for review with respect to Essar, Ispat, and JSW. As a result, the Department rescinded this review, in part, on June 4, 2009, with respect to Essar, Ispat, and JSW. *See Certain Hot-Rolled Carbon Steel Products from India: Partial Rescission of Countervailing Duty Administrative Review,* 74 FR 26847 (June 4, 2009). On August 12, 2009, Petitioner submitted comments with respect to the failure by Tata to cooperate in the administrative review and argued that the Department should resort to adverse facts available (AFA) when determining the net subsidy to apply to Tata. On October 14, 2009, Tata submitted a letter in which it responded to Petitioner's comments concerning the AFA rate to be applied to Tata in the instant review.

In accordance with 19 CFR 351.213(b), this review covers only those producers or exporters for which a review was specifically requested. The company subject to this review is Tata. This review covers 93 programs.

Scope of the Order

The merchandise subject to the order is certain hot-rolled carbon-quality steel products of a rectangular shape, of a width of 0.5 inch or greater, neither clad, plated, nor coated with metal and whether or not painted, varnished, or coated with plastics or other non-metallic substances, in coils (whether or not in successively superimposed layers), regardless of thickness, and in straight lengths, of a thickness of less than 4.75 mm and of a width measuring at least 10 times the thickness. Universal mill plate (*i.e.,* flat-rolled products rolled on four faces or in a closed box pass, or a width exceeding 150 mm, but not exceeding 1250 mm, and of a thickness of not less than 4 mm, not in coils and without patterns in relief) of a thickness not less than 4.0 mm is not included within the scope of the order.

Specifically included in the scope of the order are vacuum degassed, fully stabilized (commonly referred to as interstitial-free (IF) steels, high-strength low-alloy (HSLA) steels, and the substrate for motor lamination steels. IF steels are recognized as low-carbon steels with micro-alloying levels of elements such as titanium or niobium (also commonly referred to as columbium), or both, added to stabilize

carbon and nitrogen elements. HSLA steels are recognized as steels with micro-alloying levels of elements such as chromium, copper, niobium, vanadium, and molybdenum. The substrate for motor lamination steels contains micro-alloying levels of elements such as silicon and aluminum.

Steel products included in the scope of the order, regardless of definitions in the Harmonized Tariff Schedule of the United States (HTS), are products in which: (i) Iron predominates, by weight, over each of the other contained elements; (ii) the carbon content is two percent or less, by weight; and (iii) none of the elements listed below exceeds the quantity, by weight, respectively indicated:

1.80 percent of manganese, or
2.25 percent of silicon, or
1.00 percent of copper, or
0.50 percent of aluminum, or
1.25 percent of chromium, or
0.30 percent of cobalt, or
0.40 percent of lead, or
1.25 percent of nickel, or
0.30 percent of tungsten, or
0.10 percent of molybdenum, or
0.10 percent of niobium, or
0.15 percent of vanadium, or
0.15 percent of zirconium.

All products that meet the physical and chemical description provided above are within the scope of the order unless otherwise excluded. The following products, by way of example, are outside or specifically excluded from the scope of the order.

- Alloy hot-rolled steel products in which at least one of the chemical elements exceeds those listed above (including, *e.g.,* ASTM specifications A543, A387, A514, A517, A506).
- SAE/AISI grades of series 2300 and higher.
- Ball bearings steels, as defined in the HTS.
- Tool steels, as defined in the HTS.
- Silico-manganese (as defined in the HTS) or silicon electrical steel with a silicon level exceeding 2.25 percent.
- ASTM specifications A710 and A736.
- USS Abrasion-resistant steels (USS AR 400, USS AR 500).
- All products (proprietary or otherwise) based on an alloy ASTM specification (sample specifications: ASTM A506, A507).
- Non-rectangular shapes, not in coils, which are the result of having been processed by cutting or stamping and which have assumed the character of articles or products classified outside chapter 72 of the HTS.

The merchandise subject to the order is currently classifiable in the HTS at subheadings: 7208.10.15.00, 7208.10.30.00, 7208.10.60.00, 7208.25.30.00, 7208.25.60.00, 7208.26.00.30, 7208.26.00.60, 7208.27.00.30, 7208.27.00.60, 7208.36.00.30, 7208.36.00.60, 7208.37.00.30, 7208.37.00.60, 7208.38.00.15, 7208.38.00.30, 7208.38.00.90, 7208.39.00.15, 7208.39.00.30, 7208.39.00.90, 7208.40.60.30, 7208.53.00.00, 7208.54.00.00, 7208.90.00.00, 7211.14.00.90, 7211.19.15.00, 7211.19.20.00, 7211.19.30.00, 7211.19.45.00, 7211.19.60.00, 7211.19.75.30, 7211.19.75.60, and 7211.19.75.90. Certain hot-rolled flat-rolled carbon-quality steel covered by the order, including: vacuum-degassed fully stabilized; high-strength low-alloy; and the substrate for motor lamination steel may also enter under the following tariff numbers: 7225.11.00.00, 7225.19.00.00, 7225.30.30.50, 7225.30.70.00, 7225.40.70.00, 7225.99.00.90, 7226.11.10.00, 7226.11.90.30, 7226.11.90.60, 7226.19.10.00, 7226.19.90.00, 7226.91.50.00, 7226.91.70.00, 7226.91.80.00, and 7226.99.00.00. Subject merchandise may also enter under 7210.70.30.00, 7210.90.90.00, 7211.14.00.30, 7212.40.10.00, 7212.40.50.00, and 7212.50.00.00. Although the HTS subheadings are provided for convenience and customs purposes, the Department's written description of the merchandise subject to the order is dispositive.

Adverse Facts Available

I. The GOI

As discussed above, on February 6, 2009, the Department issued the initial questionnaire to Tata and the GOI, including state governments. The GOI filed a response to the Department's initial questionnaire on April 23, 2009 (April QR). However, the GOI failed to provide responses with regard to certain programs administered by the state governments of Gujarat, Maharashtra, Andhra Pradesh, Chhattisgarh and Karnataka. On July 30, 2009, the Department issued a supplemental questionnaire to the GOI and again requested responses with regard to the state government programs. The GOI submitted a response on August 10, 2009, but again failed to provide responses with regard to the programs administered by the state governments. On August 21, 2009, the Department issued another supplemental questionnaire to the GOI requesting additional information from the state governments mentioned above, as well as additional and clarifying information from the state government of Jharkhand concerning its responses in the April QR. In its response, the GOI again failed to submit responses with regard to the programs administered by the state governments. On September 10, 2009, the Department issued to the GOI a final supplemental questionnaire in which we requested a second time the same information from the August 21, 2009, supplemental questionnaire on the State programs administered by the government of Jharkhand. In its response, the GOI submitted incomplete information on the programs administered by the state government of Jharkhand. Specifically, in the September 24, 2009, questionnaire response, the government of Jharkhand submitted a brief letter from the Department of Industries restating that Tata had not received any benefits during the POR. No other information or documentation requested by the Department to demonstrate this claim was provided.

Sections 776(a)(1) and (2) of the Tariff Act of 1930, as amended (the Act), provide that the Department shall use the "facts otherwise available" if, *inter alia,* necessary information is not on the record or an interested party or any other person: (A) Withholds information that has been requested; (B) fails to provide information within the deadlines established, or in the form and manner requested by the Department, subject to subsections (c)(1) and (e) of section 782 of the Act; (C) significantly impedes a proceeding; or (D) provides information that cannot be verified as provided by section 782(i) of the Act.

Where the Department determines that a response to a request for information does not comply with the request, section 782(d) of the Act provides that the Department will so inform the party submitting the response and will, to the extent possible, provide that party the opportunity to remedy or explain the deficiency. If the party fails to remedy the deficiency within the applicable time limits, the Department may, subject to section 782(e) of the Act, disregard all or part of the original and subsequent responses. Section 782(e) of the Act provides that the Department "shall not decline to consider information that is submitted by an interested party and is necessary to the determination but does not meet all applicable requirements established by the administering authority" if the information is timely, can be verified, is not so incomplete that it cannot be used, and if the interested party has demonstrated that it has acted to the best of its ability in providing the

information. Where all of these conditions are met, the statute requires the Department to use the information if it can do so without undue difficulties.

Because the GOI failed to provide the requested information by the established deadlines, the Department does not have the necessary information on the record to determine whether the subsidies received by Tata under the state-administered programs constitute financial contributions and are specific within the meaning of sections 771(5)(D) and 771(5A) of the Act, respectively. Therefore, the Department must base its determination on the facts otherwise available in accordance with section 776(a)(2)(B) of the Act.

Section 776(b) of the Act provides that the Department may use an adverse inference in applying the facts otherwise available when a party has failed to cooperate by not acting to the best of its ability to comply with a request for information. Section 776(b) of the Act also authorizes the Department to use as AFA information derived from the petition, the final determination, a previous administrative review, or other information placed on the record. In a countervailing duty proceeding, the Department requires information from both the government of the country whose merchandise is under the order and the foreign domestic producers and exporters. When the government fails to provide requested information concerning alleged subsidy programs, the Department, as AFA, typically finds that a financial contribution exists under the alleged program and that the program is specific. *See e.g., Notice of Preliminary Results of Countervailing Duty Administrative Review: Certain Cut-to-Length Carbon-Quality Steel Plate from the Republic of Korea,* 71 FR 11397, 11399 (March 7, 2006) (unchanged in the *Notice of Final Results of Countervailing Duty Administrative Review: Certain Cut-to-Length Carbon-Quality Steel Plate from the Republic of Korea,* 71 FR 38861 (July 10, 2006) (in which the Department relied on adverse inferences in determining that the Government of Korea directed credit to the steel industry in a manner that constituted a financial contribution and was specific to the steel industry within the meaning of sections 771(5)(D) and 771(5A)(D)(iii) of the Act, respectively). However, the Department will normally rely on the foreign producer's or exporter's records to determine the existence and amount of the benefit. Consistent with its past practice, because the GOI failed to provide information concerning certain alleged subsidies, the Department, as AFA, has determined that those programs confer a financial contribution and are specific pursuant to sections 771(5)(D) and 771(5A) of the Act, respectively. The analysis of the extent of the benefit, if any, is discussed under the sections below entitled "Programs Administered by the Government of India", "Programs Administered by the State Government of Gujarat," "Programs Administered by the State Government of Maharashtra," "Programs Administered by the State Government of Andhra Pradesh", "Programs Administered by the State Government of Jharkhand," "Programs Administered by the State Government of Chhattisgarh," and "Programs Administered by the State Government of Karantaka."

In the instant review, Tata did not provide the Department with any information during the POR, as discussed below under the "Tata" section. Accordingly, in such instances, the Department must base its determination on the facts otherwise available in accordance with section 776(a)(2)(B) of the Act with respect to the programs in the initial questionnaire administered by the GOI and state governments.

II. Tata

With respect to Tata, although the company maintains that it had no sales of commercial quantities during the POR, it provided data concerning sales of subject merchandise during the POR on March 19 and March 23, 2009. After considering the information on the record, the Department decided that Tata did have sales during the POR and requested on March 27, 2009, that Tata submit a questionnaire response. *See* Memorandum to the File regarding "Sales by Tata during the POR," dated March 27, 2009, which is on file in the CRU of the main Commerce Building.

The Department extended Tata's deadline to respond to the initial questionnaire. Specifically, on March 27, 2009, the Department extended the March 15, 2009, original deadline until April 17, 2009. *Id.* However, Tata failed to provide a response to the initial questionnaire. On April 23, 2009, Department officials contacted Tata regarding its failure to respond to the Department's February 6, 2009 questionnaire, which was due on April 17, 2009. *See* Memorandum to the File regarding "Phone Conversation with Counsel for Tata Steel Limited," dated April 23, 2009, which is on file in the CRU of the main Commerce Building. Tata indicated that it would not participate in this administrative review. *Id.* No further response has been filed by Tata in this segment of the proceeding.

Sections 776(a)(1) and (2) of the Act provide that the Department shall apply "facts otherwise available" if, *inter alia,* necessary information is not on the record or an interested party or any other person: (A) Withholds information that has been requested; (B) fails to provide information within the deadlines established, or in the form and manner requested by the Department, subject to subsections (c)(1) and (e) of section 782 of the Act; (C) significantly impedes a proceeding; or (D) provides information that cannot be verified as provided by section 782(i) of the Act.

Because Tata failed to provide the requested information by the established deadlines, the Department does not have the necessary information to determine the net subsidies received by Tata under the GOI administered programs as well as those programs administered by the state governments. Therefore, the Department must base its determination on the facts otherwise available in accordance with section 776(a)(2)(B) of the Act with respect to the GOI and state government programs covered in this review.

Section 776(b) of the Act provides that the Department may use an adverse inference in applying the fact otherwise available when a party has failed to cooperate by not acting to the best of its ability to comply with a request for information. Because Tata did not provide the requested information on any of the programs covered by this review, we find that Tata did not act to the best of its ability and, therefore, pursuant to section 776(b) of the Act, we are employing adverse inferences in selecting from among the facts otherwise available. Section 776(b) of the Act also authorizes the Department to use as AFA information derived from the petition, the original determination, a previous administrative review, or other information placed on the record.

As explained above, due to the GOI's failure to submit a timely response, we find that all programs administered by the GOI and the state governments continued to operate during the POR, and that these programs provided financial contributions and were specific within the meanings of sections 771(5)(D) and 771(5A) of the Act, respectively.

Moreover, because Tata failed to provide the requested information with respect to the GOI and state government programs by the established deadlines, despite the extensions of time granted by the Department, we do not have the necessary information to determine the

net subsidies Tata received from these programs. Therefore, as AFA, we find that Tata received a benefit from all these programs.

In assigning net subsidy rates for each of the programs for which specific information was required from Tata, we were guided by the Department's approach in the prior reviews as well as recent CVD investigations involving the People's Republic of China (PRC). *See e.g., Certain Hot-Rolled Carbon Steel Flat Products from India: Final Results and Partial Rescission of Countervailing Duty Administrative Review,* 74 FR 20923 (May 6, 2009) (*Final Results of Fifth HRS Review*) and accompanying Issues and Decision Memorandum (Final Results of Fifth HRS Decision Memorandum) at "SGOC Industrial Policy 2004–2009" section; *see also, Circular Welded Austenitic Stainless Pressure Pipe from the People's Republic of China: Final Affirmative Countervailing Duty Determination,* 74 FR 4936 (January 28, 2009) and accompanying Issues and Decision Memorandum at "Application of Facts Available and Use of Adverse Inferences" section. In these preliminary results, as AFA, we have first sought to apply, where available, the highest, above *de minimis* subsidy rate calculated for an *identical* program from any segment of this proceeding. Absent such a rate, we have applied, where available, the highest, above *de minimis* subsidy rate calculated for a *similar* program from any segment of this proceeding. Under our AFA approach, absent a subsidy rate calculated for the same or similar program, the Department applies the highest above *de minimis,* calculated subsidy rate for any program from any CVD proceeding involving the country in which the subject merchandise is produced, so long as the producer of the subject merchandise or the industry to which it belongs could have used the program for which the rates were calculated. In the instant review, it was not necessary to rely on this third prong in the hierarchy of our AFA methodology because above *de minimis* subsidy rates for identical and/or similar programs were available within the proceeding. In accordance with this methodology, we have applied AFA rates and have assigned these rates to Tata for all the subsidy programs as discussed further below.

Analysis of Programs

A. Programs Administered by the Government of India

1. Pre- and Post-Shipment Export Financing

The Department of Banking Operations & Development, Directives Division of Reserve Bank of India (RBI) provides short-term pre-shipment export financing, or "packing credits," to exporters through commercial banks. Upon presentation of a confirmed export order or letter of credit to a bank, companies receive pre-shipment credit lines upon which they may draw as needed. Credit line limits are established by commercial banks based upon a company's creditworthiness and past export performance, and may be denominated either in Indian rupees or in foreign currency. Commercial banks extending export credit to Indian companies must, by law, charge interest on this credit at rates capped by the RBI. For post-shipment export financing, exporters are eligible to receive post-shipment short-term credit in the form of discounted trade bills or advances by commercial banks at preferential interest rates to finance the transit period between the date of shipment of exported merchandise and payment from export customers.

The Department has previously determined that these export financing programs are countervailable to the extent that the interest rates are capped by the GOI and are lower than the rates exporters would have paid on comparable commercial loans. *See e.g., Polyethylene Terephthalate Film, Sheet, and Strip from India: Final Results of Countervailing Duty Administrative Review,* 72 FR 6530 (February 12, 2007) and accompanying Issues and Decision Memorandum (Final Results of 3rd PET Film Review Decision Memorandum) at "Pre-Shipment and Post-Shipment Export Financing" section. Specifically, the Department determined that the GOI's issuance of financing at preferential rates constituted a financial contribution pursuant to section 771(5)(D)(i) of the Act and that the interest savings under this program conferred a benefit pursuant to section 771(5)(E)(ii) of the Act. The Department also found this program to be contingent upon exports and, therefore, specific within the meaning of section 771(5A)(B) of the Act. No new information or evidence of changed circumstances has been presented in this review to warrant a reconsideration of the Department's finding.

In its questionnaire response, the GOI reported that RBI does not maintain company-specific accounting records. *See* April QR at 52. Therefore, the GOI is unable to provide information as to whether Tata applied for, accrued, or received benefits under the program during the POR. *Id.* As discussed more fully under the "Adverse Facts Available" section above, Tata did not submit a response to any of the Department's questionnaires and, therefore, as AFA pursuant to section 776(b) of the Act, we preliminarily find that Tata used and benefitted from pre- and post-export financing during the POR within the meaning of section 771(5)(E) of the Act.

Pursuant to the AFA methodology described above, for this program, we have assigned a net subsidy rate of 1.32 percent *ad valorem,* which corresponds to the highest above *de minimis* subsidy rate calculated for the same program in another segment of this proceeding. *See Final Affirmative Countervailing Duty Investigation: Certain Hot-Rolled Carbon Steel Flat Products From India,* 66 FR 49635 (September 28, 2001) (HRS Investigation Final) and accompanying Issues and Decision Memorandum (HRS Investigation Decision Memorandum) at "Pre- and Post-Export Financing" section.

2. Export Promotion of Capital Goods Scheme (EPCGS)

The EPCGS provides for a reduction or exemption of customs duties and an exemption for excise taxes on imports of capital goods. Under this program, producers may import capital equipment at a reduced customs duty, subject to an export obligation equal to eight times the duty saved to be fulfilled over a period of eight years (12 years where the CIF value is Rs. 100 crore [1]) from the date the license was issued. For failure to meet the export obligation, a company is subject to payment of all or part of the duty reduction, depending on the extent of the export shortfall, plus penalty interest.

The Department has previously determined that the import duty reductions provided under the EPCGS constitute a countervailable export subsidy. *See e.g.,* Final Results of 3rd PET Film Review Decision Memorandum at "Export Promotion Capital Goods Scheme" section. Specifically, the Department has found that under the EPCGS program, the GOI provides a financial contribution under section 771(5)(D) of the Act. The Department also found this program to be specific under section 771(5A)(B) of the Act because it is contingent upon export performance. No new

[1] A crore is equal to 10,000,000 rupees.

information or evidence of changed circumstances has been provided with respect to this program. Therefore, we continue to find that import duty reductions provided under the EPCGS are countervailable export subsidies.

Pursuant to the AFA methodology described above, for this program, we are assigning a net subsidy rate of 16.63 percent *ad valorem,* which corresponds to the highest above *de minimis* subsidy rate calculated for the same program in another segment of this proceeding. *See* HRS Investigation Final and accompanying HRS Investigation Decision Memorandum at "Export Promotion for Capital Goods (EPCGS) Scheme" section.

3. Advance License Program (ALP)

Under the ALP exporters may import, duty free, specified quantities of materials required to manufacture products that are subsequently exported. The exporting companies, however, remain contingently liable for the unpaid duties until they have fulfilled their export requirement. The quantities of imported materials and exported finished products are linked through standard input/output norms (SIONs) established by the GOI.

The Department has previously found this program to be countervailable. *See e.g., Final Results of Countervailing Duty Administrative Review; Polyethylene Terephthalate Film, Sheet, and Strip from India,* 71 FR 7534 (February 13, 2006) (*Final Results of 2nd PET Film Review*), and accompanying Issues and Decision Memorandum (Final Results of 2nd PET Film Review Decision Memorandum) at "Advance License Program" section and "Comment 1." *See also, Notice of Final Affirmative Countervailing Duty Determination and Final Negative Critical Circumstances Determination: Certain Lined Paper Products from India,* 71 FR 45034 (August 8, 2006) (*Final Determination of Lined Paper Investigation*), and accompanying Issues and Decision Memorandum (Final Determination of Lined Paper Investigation Decision Memorandum) at "Advance License Program" section. In the *Final Results of 2nd PET Film Review,* the Department found that the ALP provides a financial contribution, as defined under section 771(5)(D)(ii) of the Act, the GOI does not have in place, and does not apply, a system that is reasonable and effective, within the meaning of 19 CFR 351.519(a)(4), to confirm which inputs and in what amounts are consumed in the production of the exported products. Therefore, the entire amount of the import duty deferral or exemption earned by the respondent constitutes a benefit under section 771(5)(E) of the Act. *See* Final Results of 2nd PET Film Review Decision Memorandum at Comment 1 and Final Determination of Lined Paper Investigation Decision Memorandum at Comment 10. *See also, Certain Hot-Rolled Carbon Steel Flat Products from India: Notice of Preliminary Results of Countervailing Duty Administrative Review,* 73 FR 1578 (January 9, 2008) (*Preliminary Results of Fourth HRS Review*) and *Certain Hot-Rolled Carbon Steel Flat Products From India: Final Results of Countervailing Duty Administrative Review,* 73 FR 40295 (July 14, 2008) (*Final Results of Fourth HRS Review*) and the accompanying Issues and Decision Memorandum (Final Results of Fourth HRS Review Decision Memorandum) at "Advance License Program (ALP)" section.[2] No new information has been submitted on the record in this review to warrant a reconsideration of the Department's findings.

Pursuant to the AFA methodology described above, we are assigning a net subsidy rate of 0.50 percent *ad valorem,* which corresponds to the highest above *de minimis* subsidy rate calculated for the same program in another segment of this proceeding. *See* Final Results of Fourth HRS Review Decision Memorandum at "Advance License Program (ALP)" section.

4. Duty Entitlement Passbook Scheme (DEPS)

India's DEPS was enacted on April 1, 1997, as a successor program to the Passbook Scheme (PBS). As with PBS, the DEPS enables exporting companies to earn import duty exemptions in the form of passbook credits rather than cash. All exporters are eligible to earn DEPS credits on a post-export basis, provided that the GOI has established a SION for the exported product. DEPS credits can be used for any subsequent imports, regardless of whether they are consumed in the production of an export product. DEPS credits are valid for 12 months and are transferable after the foreign exchange is realized from the export sales on which the DEPS credits are earned. With respect to subject merchandise, the GOI has established a SION for the steel industry.

The Department has previously determined that DEPS is a countervailable program, which provides a financial contribution and is specific as an export contingent subsidy within the meaning of sections 771(5)(D)(ii) and 771(5A)(B) of the Act, respectively. *See e.g.,* Final Determination of Lined Paper Investigation Decision Memorandum at "Duty Entitlement Passbook Scheme" section. The Department further found that the benefit under section 771(5)(E) of the Act is the entire amount of import duty exempted, because the GOI does not have in place, and does not apply, a system that is within the meaning of 19 CFR 351.519(a)(4), reasonable and effective for determining what imports are consumed in the production of the exported product and in what amounts. *Id.* No new information or evidence of changed circumstances has been presented in this review to warrant reconsideration of the Department's finding.

We have previously determined that this program provides a recurring benefit under 19 CFR 351.519(c). *See e.g., Preliminary Determination of Lined Paper Investigation,* 71 FR at 7920 (unchanged in *Final Determination of Lined Paper Investigation*). In accordance with past practice and pursuant to 19 CFR 351.519(b)(2), we preliminarily find that benefits from the DEPS program are conferred as of the date of exportation to the shipment for which the DEPS credits are earned. *See e.g., Final Affirmative Countervailing Duty Determination: Certain Cut-to-Length Carbon-Quality Steel Plate from India,* 64 FR 73131 (December 29, 1999) at Comment 4 (explaining that for programs such as the DEPS, "we calculate the benefit on an "earned" basis (that is upon export) where it is provided as a percentage of the value of the exported merchandise on a shipment-by-shipment basis and the exact amount of the exemption is known.")

Pursuant to the AFA methodology described above, for this program, we are assigning a net subsidy rate of 13.98 percent *ad valorem,* which corresponds to the highest above *de minimis* subsidy rate calculated for the same program in another segment of this proceeding. *See* HRS Investigation Decision Memorandum at "Duty Entitlement Passbook Scheme (DEPS)" section.

5. Status Certificate Program

India's Status Certificate Program is detailed under paragraph 3.5 of its Foreign Trade Policy Handbook. This program details the following privileges to exporters, depending on their export performance for the current year, plus the preceding three years:

[2] In this review, as in the past review, the GOI has argued that, pursuant to changes in its Foreign Trade and Policy Handbook of Procedures, advance licenses are issued with actual user conditions and are not transferable even after completion of the export obligation. The Department analyzed these changes in the past review and determined that the systemic issues continued to exist.

(i). Authorizations and Customs clearances for both imports and exports on self-declaration basis;

(ii). Fixation of Input-Output norms on priority within 60 days;

(iii). Exemption from compulsory negotiation of documents through banks. The remittance, however, would continue to be received through banking channels;

(iv). 100 percent retention of foreign exchange in EEEC account:

(v). Enhancement in normal repatriation period from 180 days to 360 days;

(vi). (Deleted);

(vii). Exemption from furnishing of Bank Guarantee in Schemes under this Policy. *See* GOI's April QR at 60.

In the Fourth HRS Review, the Department examined this program in which certain respondents participated during that POR. *See Preliminary Results of Fourth HRS Review,* 73 FR at 1597. In particular, we inquired about the extent to which the respondents used the provision related to foreign currency retention under the Status Certificate Program during the POR. *Id.* However, the Department found that the program was not used during the POR. *See Final Results of Fourth HRS Review,* and Final Results of Fourth HRS Review Decision Memorandum at "Programs Determined to Be Not Used" section. As explained above, as AFA pursuant to section 776(b) of the Act, we preliminarily find that Tata used and benefitted from this program during the POR. Furthermore, based on AFA, we preliminarily determine that this program constitutes a financial contribution in the form of a foreign currency loan, and a benefit within the meaning of 771(5)(D)(i) and 771(5)(E) of the Act, respectively.

Pursuant to the AFA methodology described above, for this program, we are assigning a net subsidy rate of 1.32 percent *ad valorem,* which corresponds to the highest above *de minimis* subsidy rate calculated for a similar program in another segment of this proceeding. *See* HRS Investigation Decision Memorandum at "Pre- and Post Export Financing".

6. Loan Guarantees From the GOI

In the underlying investigation, the Department found that the GOI, through the State Bank of India (SBI) provides loan guarantees on a case-by-case basis to particular industrial sectors. *See Notice of Preliminary Affirmative Countervailing Duty Determination and Alignment of Final Countervailing Determination With Final Antidumping Duty Determinations: Certain Hot-Rolled Carbon Steel Products from India,* 66 FR 20240, 20249 (April 20, 2001) (*Preliminary Determination of HRS Investigation*), unchanged in *Final Affirmative Countervailing Duty Determination: Certain Hot-Rolled Carbon Steel Flat Products From India,* 66 FR 49635 (September 28, 2001) (*Final Determination of HRS Investigation*) and accompanying Issues and Decision Memorandum. We determined these SBI loan guarantees confer countervailable subsidies because they provide a financial contribution in the form of a potential direct transfer of funds or liabilities and are specific to a limited number of companies within the meaning of sections 771(5)(D)(i) and 771(5A)(D)(iii)(I) of the Act, respectively. *Id.* In accordance with section 771(5)(E)(iii) of the Act, the loan guarantees provide a benefit to the recipient in the amount of the difference between the amount the recipient pays on the guaranteed loan and the amount the recipient would pay for a comparable commercial loan if there were no government guarantee. No new information or evidence of changed circumstances has been presented to warrant reconsideration of this finding. Therefore, in the instant review, we preliminarily continue to find, as AFA, that the GOI's loan guarantees under this program provide a financial contribution in the form of a potential direct transfer of funds or liabilities and are specific to a limited number of industries within the meaning of sections 771(5)(D)(i) and 771(5A)(D)(iii)(I) of the Act, respectively. Moreover, we preliminarily find, as AFA, pursuant to section 776(b) of the Act, Tata used and benefitted from this program, within the meaning of 771(5)(E)(iii) of the Act, in the form of the difference in the amount the firm paid on the guaranteed loan and the amount the firm would pay for a comparable loan if there were no government guarantee.

Pursuant to the AFA methodology described above, for this program, we are assigning, a net subsidy rate of 1.32 percent *ad valorem,* which corresponds to the highest above *de minimis* subsidy rate calculated for a similar program in another segment of this proceeding. *See* HRS Investigation Decision Memorandum at "Pre- and Post Export Financing" section.

7. Steel Development Fund (SDF) Loans

The Steel Development Fund (SDF) was established in 1978, to which India's integrated steel producers, including Tata, contributed the proceeds from GOI-mandated price increases (*i.e.,* levies). In turn, these producers were eligible to take out long-term loans from the SDF at advantageous rates. *See* Final Determination of HRC Investigation Decision Memorandum at "Loans from the Steel Development Fund" section.

In the underlying investigation, the Department determined that the GOI exercises control over the way in which funding is disbursed under this program. *See Preliminary Determination of HRS Investigation* (unchanged in *Final Determination of HRS Investigation*).

Therefore, the Department determined that loans under the SDF constitute a financial contribution within the meaning of section 771(5)(D)(i) of the Act. We also determined that loans under the SDF are specific within the meaning of section 771(5A)(D)(i) of the Act because eligibility for loans from the SDF is limited to steel companies. We further found that loans under the SDF program confer a benefit under section 771(5)(E)(ii) of the Act to the extent that the interest paid under the program during the POR was less than what would have been charged on a comparable commercial loan. *Id.* No new information or evidence of changed circumstances has been submitted in this proceeding to warrant reconsideration of this determination. Therefore, in the instant review, we preliminarily continue to find, as AFA, that the GOI's provision of SDF loans under this program provide a financial contribution in the form of a potential direct transfer of funds and are specific to a limited number of industries within the meaning of sections 771(5)(D)(i) and 771(5A)(D)(iii)(I) of the Act, respectively. Furthermore, we preliminarily find, as AFA, pursuant to section 776(b) of the Act, Tata used and benefitted from this program, within the meaning of 771(5)(E) of the Act.

Pursuant to the AFA methodology described above, for this program, we are assigning a net subsidy rate of 0.99 percent *ad valorem,* which corresponds to the highest above *de minimis* subsidy rate calculated for the same program in another segment of this proceeding. *See* HRS Investigation Decision Memorandum at "Loan from the Steel Development Fund (SDF) Fund" section.

8. Captive Mining of Iron Ore

Under the Mines and Minerals Development and Regulation Act of 1957, as amended, (MMDR) and the Mineral Concession Rules of 1960, as amended, the GOI grants captive mining rights for minerals, including iron ore, to eligible applicants. The MMDR includes a schedule that lists minerals for which mining rights are controlled

by the GOI. Iron ore is included on this schedule.

In *Preliminary Results of Fourth HRS Review,* the Department determined that the MMDR captive mining program was countervailable. *See Preliminary Results of Fourth HRS Review,* 73 FR at 1591 (unchanged in *Final Results of Fourth HRS Review*). Specifically, the Department determined that the program provided a financial contribution in the form of the provision of a good within the meaning of 771(D)(iii) of the Act and conferred a benefit within the meaning of section 771(5)(E)(iv) of the Act by enabling the participating firms to purchase iron ore from the GOI for less than adequate remuneration (LTAR). We further determined that the program is specific within the meaning of section 771(5A)(D)(iii)(I) of the Act, because it is limited to certain enterprises, such as steel producers. *Id.* In the instant review, we preliminarily continue to find that the GOI's provision of iron ore for LTAR under this program provide a financial contribution in the form of a provision of a good and is specific to a limited number of industries within the meaning of sections 771(5)(D)(iii) and 771(5A)(D)(iii)(I) of the Act, respectively. Furthermore, we preliminarily find, as AFA, pursuant to section 776(b) of the Act, Tata used and benefitted from this program, within the meaning of 771(5)(E)(iv) of the Act.

Pursuant to the AFA methodology described above, for this program, we are assigning a net subsidy rate of 18.08 percent *ad valorem,* which corresponds to the highest above *de minimis* subsidy rate calculated for the same program in another segment of this proceeding. *See* Final Results of Fourth HRS Decision Memorandum at "Captive Mining of Iron Ore" section.

9. Captive Mining Rights of Coal

In 1973, the GOI nationalized coal mining under the Coal Mines Nationalization Act. The legislation initially reserved coal mining for public companies. However, pursuant to the Coal Mines Nationalization Amendment Act of 1976, the law was revised to allow iron and steel companies to mine for coal for captive use (*i.e.,* the right of selected companies to extract coal from government-owned land for use in their production processes). In 1993 through 1996, the GOI amended the Act to also allow power companies and the cement industry to mine coal for captive use.

In *Preliminary Results of Fourth HRS Review,* the Department determined that this program was countervailable. *See Preliminary Results of Fourth HRS Review,* 73 FR at 1592 (unchanged in *Final Results of Fourth HRS Review*). Specifically, the Department determined that the provision of coal constitutes a financial contribution in the form of a provision of a good within the meaning of 771(D)(iii) of the Act. We also determined that the program conferred a benefit within the meaning of section 771(5)(E)(iv) of the Act by enabling the participating firms to purchase coal from the GOI for LTAR. We further determined that the program is specific under section 771(5A)(D)(iii)(I) of the Act, because preference is given in the allocation of coal mining rights or "blocks" to steel producers whose annual production capacity exceeds one million tons. *Id.* In the instant review, we preliminarily continue to find that the GOI's provision of coal under this program provide a financial contribution in the form of a provision of a good and is specific to a limited number of industries within the meaning of sections 771(5)(D)(iii) and 771(5A)(D)(iii)(I) of the Act, respectively. Furthermore, we preliminarily find, as AFA, pursuant to section 776(b) of the Act, Tata used and benefitted from this program, within the meaning of 771(5)(E)(iv) of the Act.

Pursuant to the AFA methodology described above, for this program we are assigning a net subsidy rate of 3.09 percent *ad valorem,* which corresponds to the highest above *de minimis* subsidy rate calculated for the same program in another segment of this proceeding. *See* Final Results of Fourth HRS Review Decision Memorandum at "Captive Mining Rights of Coal" section.

10. Export Oriented Units (EOU) Program: Duty-Free Import of Capital Goods and Raw Materials

Under this program EOUs are entitled to import capital goods and raw materials duty-free. In the *Preliminary Determination of PET Resin,* we determined that this program was countervailable. We found that the assistance provided under this program was specific as an export subsidy within the meaning of section 771(5A)(B) of the Act. *See Notice of Preliminary Affirmative Countervailing Duty Determination and Alignment With Final Antidumping Duty Determination: Bottle-Grade Polyethylene Terephthalate ("PET") Resin From India* (*Preliminary Determination of PET Resin*), 69 FR 52866, 52870 (August 30, 2004) (unchanged in the *Final Affirmative Countervailing Duty Determination: Bottle-Grade Polyethylene Terephthalate ("PET") Resin From India,* 70 FR 13460 (March 21, 2005) (*Final Determination of PET Resin*), and accompanying Issues and Decision Memorandum (PET Resin Investigation Decision Memorandum).) We found that this program provides a financial contribution in the form of forgone revenue within the meaning of section 771(5)(D)(ii) of the Act and confers a benefit in the amount of exemptions and reimbursements of customs duties and certain sales taxes on capital equipment in accordance with section 771(5)(E) of the Act and section 351.519(4)(i) of the Department's regulations. *See* PET Resin Investigation Decision Memorandum at "Export-Oriented Unit (EOU) Program: Duty-Free Import of Capital Goods and Raw Materials" section. In the instant review, we preliminarily continue to find the GOI's provision of assistance under this program provides a financial contribution in the form of revenue forgone and is specific as an export subsidy within the meaning of sections 771(5)(D)(ii) and 771(5A)(B) of the Act, respectively. Furthermore, we preliminarily find, as AFA, pursuant to section 776(b) of the Act, Tata used and benefitted from this program, within the meaning of 771(5)(E) of the Act.

Pursuant to the AFA methodology described above, for this program, we are assigning a net subsidy rate of 13.98 percent *ad valorem,* which corresponds to the highest above *de minimis* subsidy rate calculated for a similar program in another segment of this proceeding. *See* HRS Investigation Decision Memorandum at "Duty Entitlement Passbook Scheme (DEPS)" section.

11. EOU Program: Reimbursement of Central Sales Tax (CST) Paid on Materials Procured Domestically

In the *Preliminary Determination of PET Resin,* we found that under this program, EOUs are entitled to reimbursements of the CST paid on materials procured domestically, applicable to purchases of both raw materials and capital goods. *See Preliminary Determination of PET Resin,* 69 FR at 52870 (unchanged in *Final Determination of PET Resin*).

In the *Preliminary Determination of PET Resin,* the Department determined that this program was countervailable. Specifically, we found that the program is specific as an export subsidy within the meaning of section 771(5A)(B) of the Act. This program provides a financial contribution in the form of revenue foregone within the section 771(5)(D)(ii) of the Act and confers a benefit in the amount of reimbursements of CST in accordance with section 771(5)(E) of the Act. *Id.* In the instant review, we preliminarily continue to find the GOI's provision of assistance under this program provides a financial

contribution in the form of revenue forgone and is specific as an export subsidy within the meaning of sections 771(5)(D)(ii) and 771(5A)(B) of the Act, respectively. Furthermore, we preliminarily find, as AFA, pursuant to section 776(b) of the Act, Tata used and benefitted from this program, within the meaning of 771(5)(E) of the Act.

Pursuant to the AFA methodology described above, for this program, we are assigning a net subsidy rate of 3.09 percent *ad valorem,* which corresponds to the highest above *de minimis* subsidy rate calculated for a similar program in another segment of this proceeding. *See* Final Results of Second HRS Review Decision Memorandum at "State Government of Gujarat Tax Incentives" section.

12. Income Tax Exemption Scheme Under Section (80 HHC)

Under section 80HHC of the Income Tax Act, the GOI allows exporters to deduct profits derived from the export of merchandise from taxable income. In prior CVD proceedings, the Department has found this program to be an export subsidy within the meaning of section 771(5A)(B) of the Act, and thus countervailable,. *See e.g., Certain Iron-Metal Castings from India: Final Results of Countervailing Duty Administrative Review,* 65 FR 31515 (May 18, 2000), and the accompanying Issues and Decision Memorandum at "Income Tax Deductions Under Section 80 HHC" section. This program provides a financial contribution in the form of revenue foregone and confers a benefit in the form of tax savings to the company within the meaning of sections 771(5)(D)(ii) and 771(5)(E) of the Act, respectively. No new information or evidence of changed circumstances has been submitted in this proceeding to warrant reconsideration of this finding. Therefore, in the instant review, we preliminarily continue to find the tax savings to the company under this program provides a financial contribution in the form of revenue forgone and is specific as an export subsidy within the meaning of sections 771(5)(D)(ii) and 771(5A)(B) of the Act, respectively. Furthermore, we preliminarily find, as AFA, pursuant to section 776(b) of the Act, Tata used and benefitted from this program, within the meaning of 771(5)(E) of the Act.

Pursuant to the AFA methodology described above, for this program, we are assigning a net subsidy rate of 3.09 percent *ad valorem,* which corresponds to the highest above *de minimis* subsidy rate calculated for a similar program in any segment of this proceeding. *See* Final Results of Second HRS Review Decision Memorandum at "State Government of Gujarat Tax Incentives" section.

13. Sale of High-Grade Iron Ore for Less Than Adequate Remuneration

The Department has previously determined that the GOI provides high-grade iron ore to steel producers for LTAR through the government-owned National Mineral Development Corporation (NMDC). *See Final Results of Countervailing Duty Administrative Review: Certain Hot-Rolled Carbon Steel Flat Products from India,* 71 FR 28665 (May 17, 2006), and accompanying Final Results of Second HRS Review Decision Memorandum at "Sale of High-Grade Iron Ore for Less Than Adequate Remuneration" section. The NMDC is governed by the Ministry of Steel and the GOI holds the vast majority of its shares. In past reviews, we have found the NMDC to be a government authority. *See e.g., Final Results of Fourth HRS Review,* and accompanying Final Results of Fourth HRS Review Decision Memorandum at "Sale of High-Grade Iron Ore for Less Than Adequate Remuneration section."

In the *Final Results of Fourth HRS Review,* the Department found that, through NMDC, the GOI provides a direct financial contribution in the form of a provision of a good as defined under section 771(5)(D)(iii) of the Act, which is specific within the meaning of section 771(5A)(D)(iii)(I) of the Act because the actual recipients are limited to industries that use iron ore, including the steel industry. *See Final Results of Fourth HRS Review* and accompanying Final Results of Fourth HRS Review Decision Memorandum at "Sale of High-Grade Iron ore for Less Than Adequate Remuneration" section. The Department also found pursuant to section 771(5)(E)(iv) of the Act that a benefit is conferred, because the government provides the good or service for LTAR. *See* Final Results of Fourth HRS Review Decision Memorandum at "Sale of High-Grade Iron Ore for Less Than Adequate Remuneration" section.

In its questionnaire responses, the GOI provided a list of companies that purchased high-grade iron ore from NMDC during the POR and Tata does not appear on this list. *See* GOI's April QR at 43 and August 10, 2009 QR. However, without Tata's cooperation, we find that this list does not constitute complete and verifiable evidence, within the meaning of sections 782(c)(3) and (2) of the Act, respectively, that Tata or any of its affiliates did not purchase iron ore from NMDC during the POR. The Department has in the past stated that it cannot rely solely upon the government's statements to make a determination of non-use. *See Laminated Woven Sacks From the People's Republic of China: Final Affirmative Countervailing Duty Determination and Final Affirmative Determination, in Part, of Critical Circumstances,* 73 FR 35639 (June 24, 2008) (*LWS from China*), and accompanying Issues and Decision Memorandum at Comment 4 (LWS from China Investigation Decision Memorandum). Therefore, we preliminarily find that Tata benefitted from this program within the meaning of section 771(5)(E) of the Act.

Pursuant to the AFA methodology described above, for this program, we are assigning a net subsidy rate of 16.14 percent *ad valorem,* which corresponds to the highest above *de minimis* subsidy rate calculated for the same program in another segment of this proceeding. *See* Final Results of Fifth HRS Review Decision Memorandum at "Sale of High-Grade Iron Ore for LTAR" section.

14. Market Development Assistance (MDA)

In *Preliminary Results of Countervailing Duty Administrative Review: Certain Iron-Metal Castings From India,* the Department found that the Federation of Indian Export Organization administers grants under the MDA program, subject to approval by the Ministry of Commerce. *See Preliminary Results of Countervailing Duty Administrative Review: Certain Iron-Metal Castings From India,* 55 FR 46699, 46702 (November 6, 1990) (*Preliminary Results of Sixth Castings Review*) (unchanged in *Final Results of Countervailing Duty Administrative Review: Certain Iron-Metal Castings From India,* 56 FR1956 (January 18, 1991)). The purpose of the programs is to provide grants-in-aid to approved organizations (i.e., export houses) to promote the development of markets for Indian goods abroad. Such development projects may include market research, export publicity, and participation in trade fairs and exhibitions. *Id.*

The Department found that the MDA grants were countervailable. *See Preliminary Results of Sixth Castings Review* (unchanged in *Final Results of Countervailing Duty Administrative Review: Certain Iron-Metal Castings From India*). The program provides a direct financial contribution and confers a benefit within the meaning of sections 771(5)(D)(i) and 771(5)(E) of the Act, and is specific as an export subsidy within the meaning of section 771(5A)(B) of the Act. *Id.*

In its April QR, the GOI stated that Tata had not "availed any benefits under

this program," and in its September 4, 2009, questionnaire response (September QR) submitted a certificate from the administering authority attesting to the same. *See* April QR at 59 and September 4 QR at 11. However, absent the cooperation of Tata, we do not find that these submissions constitute complete and verifiable evidence, within the meaning of sections 782(e)(3) and (2) of the Act, respectively, demonstrating that Tata or any of its affiliates did not benefit from this program. The Department has in the past stated that it cannot rely solely upon the government's statements to make a determination of non-use. *See LWS from China* and accompanying LWS from China Investigation Decision Memorandum at Comment 4. Therefore, as AFA, we preliminarily find that Tata benefitted from this program within the meaning of section 771(5)(E) of the Act.

Pursuant to the AFA methodology described above, for this program, we are assigning a net subsidy rate of 6.06 percent *ad valorem,* which corresponds to the highest above *de minimis* subsidy rate calculated for a similar program in another segment of this proceeding. *See* HRS Investigation Decision Memorandum at "The GOI's Forgiveness of SDF Loans Issued to SAIL" section.

15. Market Access Initiative (MAI)

According to section 3.2 of the GOI's Foreign Trade Policy 2004–2009:

"The Market Access Initiative (MAI) scheme is intended to provide financial assistance for medium term export promotion efforts with a sharp focus on a country/product, and is administered by the Department of Commerce (DoC). Financial assistance is available for Export Promotion Councils, Industry and Trade Associations, Agencies of State Governments, Indian Commercial Missions abroad and other eligible entities as may be notified. A whole range of activities can be funded under the MAI scheme. These include, amongst others, (i) market studies, * * * (iii) sales promotion campaigns, * * * (v) publicity campaigns * * *" *See* GOI's April QR at Annex 7 page 28.

In past proceedings, the Department has investigated this program to the extent that it provides financial assistance from the GOI to approved organizations which promote exports by offsetting the expense of foreign market analysis and promotional publications. *See Preliminary Determination of Lined Paper Investigation,* 71 FR at 7922 (unchanged in *Final Determination of Lined Paper Investigation,* and Final Determination of Lined Paper Investigation Decision Memorandum at the "Programs Determined to be Not Used" section).

The GOI stated in its April QR that the respondent company had not "availed any benefits under this program," and in its September 4 QR submitted a certificate from the administering authority attesting to the same. *See* April QR at 67 and September 4 QR at 12. However, absent the cooperation of Tata, we do not find that these submissions constitute complete and verifiable evidence, within the meaning of sections 782(e)(3) and (2) of the Act, respectively, demonstrating that Tata or any of its affiliates did not benefit from this program during the POR. The Department has in the past stated that it cannot rely solely upon the government's statements to make a determination of non-use. *See LWS from China.* Therefore, we preliminarily find that Tata benefitted from this program within the meaning of section 771(5)(E) of the Act. Furthermore, as AFA, we find that Tata's use of the MAI program provides a financial contribution in the form of a grant and confers a benefit as a grant within the meaning of sections 771(5)(D)(i) and 771(5)(E) of the Act, respectively. The Department also finds, as AFA, that the program is specific as an export subsidy within the meaning of section 771(5A)(B) of the Act.

Pursuant to the AFA methodology described above, for this program, we are assigning a net subsidy rate of 6.06 percent *ad valorem,* which corresponds to the highest above *de minimis* subsidy rate calculated for a similar program in another segment of this proceeding. *See* HRS Investigation Decision Memorandum at "The GOI's Forgiveness of SDF Loans Issued to SAIL".

16. Special Economic Zone Act of 2005 (SEZ Act): Duty Free Import/Domestic Procurement of Goods and Services for Development, Operation, and Maintenance of SEZ Units Program

In the Fifth HRS Review, we found that, under this program, companies with SEZ units may import from overseas or procure domestically duty-free goods and services. *See Certain Hot-Rolled Carbon Steel Flat Products from India: Notice of Preliminary Results and Partial Rescission of Countervailing Duty Administrative Review,* 73 FR 79791, 79797 (December 30, 2008) (*Fifth HRS Preliminary Results*) (unchanged in *Certain Hot-Rolled Carbon Steel Flat Products from India: Final Results and Partial Rescission of Countervailing Duty Administrative Review,* 74 FR 20923 (May 6, 2009) (*Fifth HRS Final Results*) and Final Results of Fifth HRS Review Decision Memorandum at "SEZ Act.") The Department found, based on AFA, the company's use of the programs under the 2005 SEZ Act constitutes a financial contribution that is specific within the meaning of sections 771(5)(D) and 771(5A)(B) of the Act, respectively. *Id.* No new information or evidence of changed circumstances has been submitted in this proceeding to warrant reconsideration of this finding.

The GOI stated in its April QR that Tata was not covered by this program. *See* April QR at 68. However, absent cooperation by Tata, we do not find that this statement constitutes complete and verifiable evidence, within the meaning of sections 782(e)(3) and (2) of the Act, demonstrating that Tata or any of its affiliates did not benefit from this program. The Department has in the past stated that it cannot rely solely upon the government's statements to make a determination of non-use. *See LWS from China.* Therefore, we preliminarily find, as AFA, pursuant to section 776(b) of the Act, that Tata used and benefitted from this program within the meaning of section 771(5)(E) of the Act. Moreover, we preliminarily find, as AFA, the company's use of this program under the 2005 SEZ Act constitutes a financial contribution in the form of revenue forgone and is specific as an export subsidy within the meaning of sections 771(5)(D)(ii) and 771(5A)(B) of the Act, respectively.

Pursuant to the AFA methodology described above, for this program, we are assigning a net subsidy rate of 1.66 percent *ad valorem,* which corresponds to the highest above *de minimis* subsidy rate calculated for a the same program in another segment of this proceeding. *See* Final Results of Fifth HRS Review Decision Memorandum at "SEZ Act" section.

17. SEZ Act: Exemption From Excise Duties on Goods Machinery and Capital Goods Brought From the Domestic Tariff Area for Use by an Enterprise in the SEZ

In the Fifth HRS Review, we found that, under this program, companies with SEZ units may be eligible for exemption from excise duties on goods machinery and capital goods brought from the Domestic Tariff Area for use by an enterprise in the SEZ. *See Fifth HRS Preliminary Results,* 73 FR at 79797 (unchanged in *Fifth HRS Final Results*). The Department found, based on AFA, the company's use of the programs under the 2005 SEZ Act constitutes a financial contribution that is specific within the meaning of sections 771(5)(D) and 771(5A)(B) of the Act, respectively. *Id.*

The GOI stated in its April QR that Tata was not covered by this program. *See* April QR at 68. However, absent

cooperation by Tata, we do not find that this statement constitutes complete and verifiable evidence, within the meaning of sections 782(e)(3) and (2) of the Act, demonstrating that Tata or any of its affiliates did not benefit from this program during the POR. The Department has in the past stated that it cannot rely solely upon the government's statements to make a determination of non-use. *See LWS from China.* Therefore, we preliminarily find, as AFA, pursuant to section 776(b) of the Act, that Tata used and benefitted from this program within the meaning of section 771(5)(E) of the Act. Moreover, we preliminarily find, as AFA, the company's use of this program under the 2005 SEZ Act constitutes a financial contribution in the form of revenue forgone and is specific as an export subsidy within the meaning of sections 771(5)(D)(ii) and 771(5A)(B) of the Act, respectively.

Pursuant to the AFA methodology described above, for this program, we are assigning a net subsidy rate of 2.57 percent *ad valorem,* which corresponds to the highest above *de minimis* subsidy rate calculated for this program in another segment of this proceeding. *See* Final Results of Fifth HRS Review Decision Memorandum at "SEZ Act" section.

18. SEZ Act: Drawback on Goods Brought or Services Provided From the Domestic Tariff Area Into a SEZ, or Services Provided in a SEZ by Service Providers Located Outside India

In the Fifth HRS Review, we found that under this program companies that are suppliers are eligible to claim drawback or Duty Entitlement Pass Book (DEPB) on goods or services provided from the Domestic Tariff area or from outside India into a SEZ. However, we found the program was not used. *See Fifth HRS Preliminary Results,* 73 FR at 79801 (unchanged in *Fifth HRS Final Results*).

The GOI stated in its April QR that Tata was not covered by this program. *See* April QR at 68. However, absent cooperation by Tata, we do not find that this statement constitutes complete and verifiable evidence, within the meaning of sections 782(e)(3) and (2) of the Act, demonstrating that Tata or any of its affiliates did not benefit from this program during the POR. The Department has in the past stated that it cannot rely solely upon the government's statements to make a determination of non-use. *See LWS from China.* Therefore, we preliminarily find, as AFA, pursuant to section 776(b) of the Act, that Tata used and benefitted from this program within the meaning of section 771(5)(E) of the Act. Furthermore, as AFA, we preliminarily find that Tata's use of the programs under the SEZ Act constitutes a financial contribution in the form of duty exemption that is specific within the meaning of sections 771(5)(D) and 771(5A)(B) of the Act.

Pursuant to the AFA methodology described above, for this program, we are assigning a net subsidy rate of 13.98 percent *ad valorem,* which corresponds to the highest above *de minimis* subsidy rate calculated for a similar program in another segment of this proceeding. *See* HRC Investigation Decision Memorandum at "Duty Entitlement Passbook Scheme (DEPS)" section.

19. SEZ Act: 100 Percent Exemption From Income Taxes on Export Income From the First 5 Years of Operation, 50 Percent for the Next 5 Years, and a Further 50 Percent Exemption on Export Income Reinvested in India for an Additional 5 Years

In the Fifth HRS Review, we found that under this program benefits are provided on sales made from the SEZ. However, the program was not used. *See Fifth HRS Preliminary Results,* 73 FR at 79801 (unchanged in *Fifth HRS Final Results*).

The GOI stated in its April QR that the Tata was not covered by this program. *See* April QR at 68. However, absent cooperation by Tata, we do not find that this statement constitutes complete and verifiable evidence, within the meaning of sections 782(e)(3) and (2) of the Act, demonstrating that Tata or any of its affiliates did not benefit from this program during the POR. The Department has in the past stated that it cannot rely solely upon the government's statements to make a determination of non-use. *See LWS from China.* Therefore, we preliminarily find, as AFA, pursuant to section 776(b) of the Act, that Tata used and benefitted from this program within the meaning of section 771(5)(E) of the Act. Furthermore, as AFA, we preliminarily find that Tata's use of the programs under the SEZ Act constitutes a financial contribution in the form of revenue forgone that is specific within the meaning of sections 771(5)(D)(ii) and 771(5A)(B) of the Act.

Pursuant to the AFA methodology described above, for this program, we are assigning a net subsidy rate of 3.09 percent *ad valorem,* which corresponds to the highest above *de minimis* subsidy rate calculated for a similar program in another segment of this proceeding. *See* Final Results of Second HRS Review Decision Memorandum at "State Government of Gujarat (SGOG) Tax Incentives section."

20. SEZ Act: Exemption From the Central Sales Tax (CST)

In the Fifth HRS Review, we found that under this program companies may be eligible for exemption from the 2 percent CST on inter-state purchases made by the SEZ unit. *See Fifth HRS Preliminary Results,* 73 FR at 79798 (unchanged in *Fifth HRS Final Results*). The Department found, based on AFA, the company's use of the programs under the 2005 SEZ Act constitutes a financial contribution that is specific within the meaning of sections 771(5)(D) and 771(5A)(B) of the Act, respectively. *Id.*

The GOI stated in its April QR that Tata was not covered by this program. *See* April QR at 68. However, absent cooperation by Tata, we do not find that this statement constitutes complete and verifiable evidence, within the meaning of sections 782(e)(3) and (2) of the Act, demonstrating that Tata or any of its affiliates did not benefit from this program during the POR. The Department has in the past stated that it cannot rely solely upon the government's statements to make a determination of non-use. *See LWS from China.* Therefore, we preliminarily find, as AFA, pursuant to section 776(b) of the Act, that Tata used and benefitted from this program within the meaning of section 771(5)(E) of the Act. Moreover, we preliminarily find, as AFA, the company's use of this program under the 2005 SEZ Act constitutes a financial contribution in the form of revenue forgone and is specific as an export subsidy within the meaning of sections 771(5)(D)(ii) and 771(5A)(B) of the Act, respectively.

Pursuant to the AFA methodology described above, for this program, we are assigning a net subsidy rate of 3.09 percent *ad valorem,* which corresponds to the highest above *de minimis* subsidy rate calculated for a similar program in any segment of this proceeding. *See* Final Results of Second HRS Review Decision Memorandum at "State Government of Gujarat (SGOG) Tax Incentives" section.

21. SEZ Act: Exemption From National Service Tax

In the Fifth HRS Review, we found that under this program SEZ units are exempt from paying the national service tax of 12.36 percent. Therefore, a service provider to an SEZ unit is not required to pay the 12.36 percent service tax on invoices issued to SEZ units. *See Fifth HRS Preliminary Results,* 73 FR at 79798 (unchanged in *Fifth HRS Final*

Results). The Department found, based on AFA, the company's use of the programs under the 2005 SEZ Act constitutes a financial contribution that is specific within the meaning of sections 771(5)(D) and 771(5A)(B) of the Act, respectively. *Id.*

The GOI stated in its April QR that Tata was not covered by this program. *See* April QR at 68. However, absent cooperation by Tata, we do not find that this statement constitutes complete and verifiable evidence, within the meaning of sections 782(e)(3) and (2) of the Act, demonstrating that Tata or any of its affiliates did not benefit from this program during the POR. The Department has in the past stated that it cannot rely solely upon the government's statements to make a determination of non-use. *See LWS from China.* Therefore, we preliminarily find, as AFA, pursuant to section 776(b) of the Act, that Tata used and benefitted from this program within the meaning of section 771(5)(E) of the Act. Moreover, we preliminarily find, as AFA, the company's use of this program under the 2005 SEZ Act constitutes a financial contribution in the form of revenue forgone and is specific as an export subsidy within the meaning of sections 771(5)(D)(ii) and 771(5A)(B) of the Act, respectively.

Pursuant to the AFA methodology described above, this program, we are assigning a net subsidy rate of 3.09 percent *ad valorem,* which corresponds to the highest above *de minimis* subsidy rate calculated for a similar program in any segment of this proceeding. *See* Final Results of Second HRS Review Decision Memorandum at "State Government of Gujarat (SGOG) Tax Incentives" section.

22. Duty Free Replenishment Certificate (DFRC) Scheme

The DFRC scheme was introduced by the GOI in 2001 and was administered by the Directorate General for Foreign Trade. The DFRC was a duty replenishment scheme that was available to exporters for the subsequent import of inputs used in the manufacture of goods without payment of basic customs duty. In order to receive a license, which entitled the recipient subsequently to import duty free certain inputs used in the production of the exported product, as identified in a SION, within the following 24 months, a company had to: (1) Export manufactured products listed in the GOI's export policy book and against which there is a SION for inputs required in the manufacture of the export product based on quantity; and (2) have realized the payment of export proceeds in the form of convertible foreign currency. The application was to be filed within six months of the realization of the profits. DFRC licenses were transferrable, yet the transferee was limited to importing only those products and in the quantities specified on the license.

In the past, the Department has found that in order to receive a DFRC license, firms must demonstrate that they made an export sale by submitting proof of payment to the GOI in the form of a bank realization certificate. As such, we found that duty exemptions provided under the DFRC program were earned on a shipment-by-shipment basis and, therefore, were tied to particular products and markets within the meaning of 19 CFR 351.525(b)(4) and (5). Moreover, we determined that the sale of DFRC licenses and the sales proceeds conferred a benefit within the meaning of sections 771(5)(D)(ii) and 771(5)(E) of the Act, respectively. We also determined that because the receipt of DFRC licenses are contingent upon exports, the DFRC program was specific within the meaning of section 771(5A)(B) of the Act. *See Preliminary Determination of Lined Paper Investigation,* unchanged in *Final Determination of Lined Paper Investigation,* and accompanying Issues and Decision Memorandum at "Duty Free Replenishment Certificate (DFRC) Scheme."

The GOI claimed that the DFRC program was terminated as of May 1, 2006, in accordance with paragraph 4.2.8 of Foreign Trade Policy (FTP) for the year 2006–07. Moreover, the GOI claimed that no benefits accrued under this program during the POR. *See* GOI's April QR at 18 and Exhibit 7. With respect to residual benefits from this program, in the September 4, 2009 questionnaire response (September 4 QR) the GOI, citing to paragraph 4.2.8 of the FTP for the period September 1, 2004–March 31, 2009, stated that any export made after April 30, 2006, is not eligible for benefits under the DFRC. *See* GOI's September 4, 2009 QR at 4. However, because we have previously determined that DFRC licenses can be used 24 months after they were issued, firms that had qualifying exports on April 30, 2006, would have been eligible to use benefits under this program through at least April 30, 2008, which is covered by the POR. *See Preliminary Determination of Lined Paper Investigation,* unchanged in *Final Determination of Lined Paper Investigation,* and accompanying Issues and Decision Memorandum at "Duty Free Replenishment Certificate (DFRC) Scheme." Without Tata's cooperation, we preliminarily find that the documentation provided by the GOI does not constitute complete and verifiable evidence, within the meaning of sections 782(c)(3)(2) of the Act, respectively, that Tata or any of its affiliates did not use DFRC licenses to import duty free inputs under this program during the period covered by this administrative review. Therefore, we preliminarily continue to find that the duty exemptions provided under the DFRC licenses provided countervailable subsidies during the POR.

Pursuant to the AFA methodology described above, for this program, we are assigning a net subsidy rate of 13.98 percent *ad valorem,* which corresponds to the highest above *de minimis* rate calculated for a similar program in another segment of this proceeding. *See* HRS Investigation Decision Memorandum at "Duty Entitlement Passbook Scheme (DEPS)" section.

23. Target Plus Scheme (TPS)

In the Fourth HRS Review, the Department found that import duty exemptions under the TPS were countervailable. Specifically, the Department determined that a financial contribution, in the form of revenue forgone, as defined under section 771(5)(D)(ii) of the Act, was provided under program because the GOI provides credits for the future payment of import duties. In addition, we found that the TPS program provides a benefit because the GOI did not have in place and did not apply a system that was reasonable and effective for the purposes intended to confirm which inputs, and in what amounts, were consumed in the production of the exported products. Therefore, in accordance with 19 CFR 351.519(a)(4) and section 771(5)(E) of the Act, we determined that the entire amount of import duty exemption earned during the POR constitutes a benefit. Moreover, we determined that the program was specific under section 771(5A)(B) of the Act because the program could only be used by exporters. *See Preliminary Results of Fourth HRS Review,* 73 FR at 1590, found not used in the *Final Results of Fourth HRS Review,* and accompanying Final Results of Fourth HRS Review Decision Memorandum at "Target Plus Scheme" section and Comment 30.

The GOI claimed that the TPS was terminated as of April 1, 2006, and reported that no benefits accrued under this program during the POR. *See* GOI's April QR at 59. In the GOI's September 4 QR, the GOI provided Notification No. 57 dated March 31, 2009, from the Directorate General for Foreign Trade

and, citing to this document, claimed that this document shows that the Target Plus Scheme has been abolished effective April 1, 2006. The GOI further claimed that this notice clearly states that the TPS has been abolished for exports from April 1, 2006, forward and that any export made after this date is not entitled to the benefits under this program. *See* GOI's September 4, 2009 QR at 5. However, we have insufficient information concerning the time period for which benefits may carry forward under this program. Furthermore, without Tata's cooperation, we preliminarily find that the documentation provided by the GOI does not constitute complete and verifiable evidence, within the meaning of sections 782(c)(3)(2) of the Act, respectively, that Tata or any of its affiliates did not use TPS credits to pay customs duty on imports of any inputs under this program during the POR.

Pursuant to the AFA methodology described above, for this program, we are assigning a net subsidy rate of 13.98 percent *ad valorem,* which corresponds to the highest above *de minimis* rate calculated for a similar program in another segment of this proceeding. *See* HRS Investigation Decision Memorandum at "Duty Entitlement Passbook Scheme (DEPS)" section.

B. Programs Administered by the State Government of Gujarat (SGOG)

1. State Government of Gujarat Tax Incentives: Sales Tax Exemptions of Purchases of Goods During the POR

Pursuant to a 1995 Industrial Policy of Gujarat and an Incentive Policy of 1995–2000 (1995 IP), the SGOG offered incentives, such as sales tax exemptions and deferrals, to companies that locate or invest in certain disadvantaged or rural areas in the State of Gujarat. A company could be eligible to claim exemptions or deferrals valued up to 90 percent of the total eligible capital investment. These policies exempt companies from paying sales tax on the purchases of raw materials, consumable stores, packing materials, and processing materials. Other available benefits include exemption from or deferment of sales tax and turnover tax on the sale of intermediate products, by-products, and scrap. The Pioneer and Prestigious programs are the two programs that are available under this policy. To be eligible for the incentives, companies must have made a fixed capital investment of over five crores (Pioneer Scheme) or 300 crores (Prestigious Scheme) in a qualified under-developed area in the State of Gujarat. *See Notice of Preliminary Results of Countervailing Duty Administrative Review: Certain Hot-Rolled Carbon Steel Flat Products from India,* 71 FR 1512, 1514 (January 10, 2006) (*Preliminary Results of Second HRC Review*); see also the *Final Results of Countervailing Duty Administrative Review: Certain Hot-Rolled Carbon Steel Flat Products from India,* 71 FR 28665 (May 17, 2006) and Final Results of Second HRS Review Decision Memorandum at "State Government of Gujarat (SGOG) Tax Incentives" section.

The amount of the eligible capital investment is linked to the amount of the incentives received over a period of 8 to 14 years, depending on the category of participation. For the Pioneer Scheme, which initially began in 1986, companies making a capital investment during 1986 and 1991 were allowed to utilize this program. For the Prestigious Scheme, tax incentives were offered only for investment units which started production between 1990 and 1995. *See Preliminary Results of Second HRC Review,* 71 FRat 1514 and Final Results of Second HRC Review Decision Memorandum at "State Government of Gujarat (SGOG) Tax Incentives" section.

In the *Final Determination of PET Resin Investigation,* the Department determined that the sales tax exemptions under the Prestigious Scheme resulted in companies not paying the state sales tax otherwise due, and thus constituted a countervailable subsidy. *See Final Determination of PET Resin,* and the *Final Results of the Fourth HRS Review,* and Final Results of Fourth HRS Review Decision Memorandum at the "State of Gujarat (SOG) Sales Tax Incentive Scheme" section. Consistent with our findings in the *Final Determination of PET Resin,* we determined in *Final Results of Fourth HRS Review* that this program was countervailable because it is limited to only those companies that make an investment in a specified disadvantaged area and is therefore specific under section 771(5A)(D)(iv) of the Act. *See Final Results of Fourth HRS Review.* We also found in the *Preliminary Results of Fourth HRS Review* that the SGOG provides a financial contribution under section 771(5)(D)(ii) of the Act by foregoing the collection of sales tax revenue and that a company receives a benefit under section 771(5)(E) of the Act in the amount of sales tax that it does not pay. *See Preliminary Results of Fourth HRS Review,* 73 FR at 1593 (unchanged in *Final Results of Fourth HRS Review*). In the instant review, as AFA, we preliminarily continue to find the tax savings to the company under this program provides a financial contribution in the form of revenue forgone and is specific because it is limited to eligible companies investing in specified disadvantaged area within the meaning of sections 771(5)(D)(ii) and 771(5A)(D)(iv) of the Act, respectively. Furthermore, we preliminarily find, as AFA, pursuant to section 776(b) of the Act, Tata used and benefitted from this program, within the meaning of 771(5)(E) of the Act. Pursuant to the AFA methodology described above, for this program, we are assigning a net subsidy rate of 3.09 percent *ad valorem,* which corresponds to the highest above *de minimis* subsidy rate calculated for this program in another segment of this proceeding. *See* Final Results of Second HRS Review Decision Memorandum at "State Government of Gujarat (SGOG) Tax Incentives" section.

2. State Government of Gujarat Tax Incentives: Deferrals on Purchases of Goods From Prior Years (as Well as Deferrals Granted During the POR

As noted above, under the 1995 IP, the SGOG offered incentives, such as sales tax deferrals, to companies that locate or invest in certain disadvantaged or rural areas in the State of Gujarat.

As explained above, the Department found this program countervailable under section 771(5A)(D)(iv) of the Act because it was regionally specific. The Department also found that the SGOG provides a financial contribution under section 771(5)(D)(ii) of the Act by foregoing the collection of sales tax revenue and that a company receives a benefit under section 771(5)(E) of the Act in the amount of sales tax that it does not pay. *See Preliminary Results of Fourth HRS Review,* 73 FR at 1593 (unchanged in *Final Results of Fourth HRS Review*). In the instant review, as AFA, we preliminarily continue to find the tax savings to the company under this program provides a financial contribution in the form of revenue forgone and is specific because it is limited to eligible companies investing in specified disadvantaged area within the meaning of sections 771(5)(D)(ii) and 771(5A)(D)(iv) of the Act, respectively. Furthermore, we preliminarily find, as AFA, pursuant to section 776(b) of the Act, Tata used and benefitted from this program, within the meaning of 771(5)(E) of the Act.

Pursuant to the AFA methodology described above, for this program, we are assigning a net subsidy rate of 3.09 percent *ad valorem,* which corresponds to the highest above *de minimis* subsidy rate calculated for this program in another segment of this proceeding. *See* Final Results of Second HRS Review Decision Memorandum at "State

Government of Gujarat (SGOG) Tax Incentives" section.

3. State Government of Gujarat Tax Incentives: Value Added Tax (VAT) Program Established on April 1, 2006

In the Fourth HRS Review, we found that the SGOG had established a VAT remission system on April 1, 2006 that remits VAT to eligible firms using the balance of tax incentives under the Prestigious Scheme another tax incentive program. This system remits VAT to eligible firms using the balance of tax incentives under the Prestigious Scheme that remained unutilized after the end of the 8- to 14-year time window allowed under the Prestigious Scheme. *See Preliminary Results of Fourth HRS Review,* 73 FR at 1593 (unchanged in the *Final Results of Fourth HRS Review*).

The VAT remission system operates differently with respect to purchases and sales. For purchases within the State of Gujarat, eligible firms (*i.e.,* firms with existing balances under the Prestigious Scheme) must pay full tax to the vendor. However, the tax paid is credited to the company in the form of an input tax credit to be refunded by the State Government. The SGOG then debits the refund received by the firm against the firm's remaining balance of tax credits leftover from the Prestigious System. *Id.*

With respect to sales, a company is required to charge sales tax from its customers (both local VAT and central sales tax). However, the tax collected by the seller does not have to be paid to the SGOG, but instead can be retained through a remission order provided by the state's sales tax authorities. In such instances, the amount of sales tax retained by the firm is credited against the firm's remaining balance of tax credits leftover from the Prestigious Scheme. *Id.*

In the *Preliminary Results of Fourth HRS Review,* we determined that this VAT remission system was linked to the Prestigious Scheme, a countervailable program. *Id.* Moreover, because the source of the tax remissions received under the system comes from participating firms' unused tax credits under the Prestigious Scheme, we determined that these indirect tax remissions constituted a financial contribution, in the form of revenue forgone, under section 771(5)(D)(ii) of the Act and are regionally specific under section 771(5A)(D)(iv) of the Act. We further determined that these indirect tax remissions conferred a benefit under section 771(5)(E) of the Act and 19 CFR 351.510(a)(1) because they enabled participating firms to pay less indirect taxes than they would have to pay absent the system. *Id.* In the instant review, as AFA, we preliminarily continue to find the tax savings to the company under this program provides a financial contribution in the form of revenue forgone and is specific because it is limited to eligible companies investing in specified disadvantaged area within the meaning of sections 771(5)(D)(ii) and 771(5A)(D)(iv) of the Act, respectively. Furthermore, we preliminarily find, as AFA, pursuant to section 776(b) of the Act, Tata used and benefitted from this program, within the meaning of 771(5)(E) of the Act.

Pursuant to the AFA methodology described above, for this program, we are assigning to the VAT remission scheme program, a net subsidy rate of 3.09 percent *ad valorem,* which corresponds to the highest above *de minimis* subsidy rate calculated for the same program in another segment of this proceeding. *See* Final Results of Second HRS Review Decision Memorandum at "State Government of Gujarat (SGOG) Tax Incentives" section.

4. Gujarat Special Economic Zone Act (SGOG SEZ Act): Stamp Duty and Registration Fees for Land Transfers, Loan Agreements, Credit Deeds, and Mortgages

In the *Fifth HRS Preliminary Results,* the Department found that under the SGOG SEZ act, the respondent firm was not required to pay the registration charge on leased land from the SEZ Developer nor the stamp duty on the lease rental. *See Fifth HRS Preliminary Results* (unchanged in *Fifth HRS Final Results*. The Department found, based on AFA, the company's use of the programs under the 2005 SEZ Act constitutes a financial contribution that is specific within the meaning of sections 771(5)(D) and 771(5A)(B) of the Act, respectively. Furthermore, we found that the exemption on registration charges and stamp duties confer a benefit under section 771(5)(E) of the Act. *Id.* In the instant review, we preliminarily find, as AFA, pursuant to section 776(b) of the Act, that Tata used and benefitted from this program within the meaning of section 771(5)(E) of the Act. Moreover, we preliminarily find, as AFA, the company's use of this program under the 2005 SEZ Act constitutes a financial contribution in the form of revenue forgone and is specific as an export subsidy within the meaning of sections 771(5)(D)(ii) and 771(5A)(B) of the Act, respectively.

Pursuant to the AFA methodology described above, for this program, we are assigning a net subsidy rate of 3.09 percent *ad valorem,* which corresponds to the highest above *de minimis* subsidy rate calculated for a similar program in another segment of this proceeding. *See* Final Results of Second HRS Review Decision Memorandum at "State Government of Gujarat (SGOG) Tax Incentives" section.

5. Gujarat Special Economic Zone Act (SGOG SEZ Act): Sales Tax, Purchase Tax, and Other Taxes Payable on Sales and Transactions

In the *Preliminary Results of Fifth HRS Review,* the Department found that under the SGOG SEZ Act, inputs purchased by SEZ units from within the State of Gujarat are exempted from payment of sales tax. See *Fifth HRS Preliminary Results,* 73 FR at 79799 (unchanged in *of Fifth HRS Final Results*). The Department found, based on AFA, the company's use of the programs under the 2005 SEZ Act constitutes a financial contribution that is specific within the meaning of sections 771(5)(D) and 771(5A)(B) of the Act, respectively. Furthermore, we found that sales tax exemptions received by the company confer a benefit under section 771(5)(E) of the Act. *Id.* In the instant review, we preliminarily find, as AFA, pursuant to section 776(b) of the Act, that Tata used and benefitted from this program within the meaning of section 771(5)(E) of the Act. Moreover, we preliminarily find, as AFA, the company's use of this program under the 2005 SEZ Act constitutes a financial contribution in the form of revenue forgone and is specific as an export subsidy within the meaning of sections 771(5)(D)(ii) and 771(5A)(B) of the Act, respectively.

Pursuant to the AFA methodology described above, for this program, we are assigning a net subsidy rate of 3.09 percent *ad valorem,* which corresponds to the highest above *de minimis* subsidy rate calculated for a similar program in any segment of this proceeding. *See* Final Results of Second HRS Review Decision Memorandum at "State Government of Gujarat (SGOG) Tax Incentives" section.

6. Gujarat Special Economic Zone Act (SGOG SEZ Act): Sales and Other State Taxes on Purchases of Inputs (Both Goods and Services) for the SEZ or a Unit Within the SEZ

In the *Fifth HRS Preliminary Results,* the Department found that under the SGOG SEZ act, the two percent CST charged on goods and services procured by SEZ units from states other than Gujarat is exempted when those goods and services are supplied to SEZ units. See *Fifth HRS Preliminary Results,* 73

FR at 79799 (unchanged in *Fifth HRS Final Results*). The Department found, based on AFA, the company's use of the programs under the 2005 SEZ Act constitutes a financial contribution that is specific within the meaning of sections 771(5)(D) and 771(5A)(B) of the Act, respectively. Furthermore, we found that the company's receipt of sales tax exemptions on inter-state purchases confer a benefit under section 771(5)(E) of the Act. *Id.* In the instant review, we preliminarily find, as AFA, pursuant to section 776(b) of the Act, that Tata used and benefitted from this program within the meaning of section 771(5)(E) of the Act. Moreover, we preliminarily find, as AFA, the company's use of this program under the 2005 SEZ Act constitutes a financial contribution in the form of revenue forgone and is specific as an export subsidy within the meaning of sections 771(5)(D)(ii) and 771(5A)(B) of the Act, respectively.

Pursuant to the AFA methodology described above, for this program, we are assigning a net subsidy rate of 3.09 percent *ad valorem,* which corresponds to the highest above *de minimis* subsidy rate calculated for a similar program in another segment of this proceeding. *See* Final Results of Second HRS Review Decision Memorandum at "State Government of Gujarat (SGOG) Tax Incentives" section.

C. Programs Administered by the State Government of Maharashtra (SGOM)

1. Sales Tax Program

In the *Preliminary Results of Fourth HRS Review,* the Department found that sales tax exemptions, deferrals, and sales tax loans, in the form of interest-free loans, were provided under the SGOM's sales tax program. *See Preliminary Results of Fourth HRS Review,* 73 FR at 1595 (unchanged in *Final Results of Fourth HRS Review*). The Department found that the benefits provided under the program are specific under section 771(5A)(D)(iv) of the Act because they are limited to only those companies that make an investment in a specified developing area. We further found that the program constitutes a financial contribution under section 771(D)(ii) of the Act by foregoing the collection of sales taxes and, in the case of sales tax deferrals, in the form of uncollected interest on the deferred sales taxes. We also found that the sales tax program confers a benefit under section 771(5)(E) of the Act: (1) In the amount of sales tax that it does not pay; (2) in the case of sales tax deferrals, in the amount of interest otherwise due; and (3) in the case of sales tax loans, in the form of interest-free loans. *Id.* In the instant review, as AFA, we preliminarily continue to find the tax savings to the company under this program provides a financial contribution in the form of revenue forgone and is specific because it is limited to only those companies investing in a specified developing area within the meaning of sections 771(5)(D)(ii) and 771(5A)(D)(iv) of the Act, respectively. Furthermore, we preliminarily find, as AFA, pursuant to section 776(b) of the Act, Tata used and benefitted from this program, within the meaning of 771(5)(E) of the Act.

Pursuant to the AFA methodology described above, for this program, we are assigning a net subsidy rate of 0.59 percent *ad valorem,* which corresponds to the highest above *de minimis* subsidy rate calculated for the same program in another segment of this proceeding. *See* Final Results of Fourth HRS Review Decision Memorandum at "State Government of Maharashtra (SGOM) Programs Sales Tax Program" section.

2. VAT Tax Refunds Under the SGOM Package Scheme of Incentives and the Maharashtra New Package Scheme of Incentives

In the *Preliminary Results of Fourth HRS Review,* the Department found that under the Maharashtra Package Scheme of Incentives and the Maharashtra New Package Scheme of Incentives, the SGOM offered tax incentives including VAT tax refunds to companies that located or invested in certain developing areas in the State of Maharashtra. *See Preliminary Results of Fourth HRS Review,* 73 FR at 1595 (unchanged in *Final Results of Fourth HRS Review*). The Department found that the benefits provided under the program are specific under section 771(5A)(D)(iv) of the Act because they are limited to only those companies that make an investment in a specified developing area. We further found that the program constitutes a financial contribution under section 771(5)(D)(ii) of the Act by forgoing the collection of sales taxes. *Id.* In the *Final Results of Fourth HRS Review,* the Department found that the amount of refunds claimed by the company were not excessive during the POR and did not constitute a benefit. However, the Department stated that it would continue to examine this program in future reviews. *See* Final Results of Fourth HRS Review Decision Memorandum at "State Government of Maharashtra Program" section. In the instant review, as AFA, we preliminarily continue to find the tax savings to the company under this program provide a financial contribution in the form of revenue forgone and are specific because they are limited to only those companies investing in a specified developing area within the meaning of sections 771(5)(D)(ii) and 771(5A)(D)(iv) of the Act, respectively. Furthermore, as explained above, as AFA, pursuant to section 776(b) of the Act, we preliminarily find that Tata used and benefitted from this program during the POR.

Pursuant to the AFA methodology described above, for this program, we are assigning a net subsidy rate of 3.09 percent *ad valorem,* which corresponds to the highest above *de minimis* subsidy rate calculated for a similar program in another segment of this proceeding. *See* Final Results of Second HRS Review Decision Memorandum at "State Government of Gujarat (SGOG) Tax Incentives" section.

3. Electricity Duty Exemption Under the Package Scheme of Incentives for 1993

In the *Preliminary Results of Fourth HRS Review,* the Department determined that electricity duty exemptions received under the Package Scheme of Incentives of 1993 are countervailable. Specifically, we determined that the exemptions are regionally specific under section 771(5A)(D)(iv) of the Act because they are limited to companies that make investments in a specified development area. *See Preliminary Results of Fourth HRS Review,* 73 FR at 1596 (unchanged in *Final Results of Fourth HRS Review*). We further determined that the exemptions constitute a financial contribution, in the form of revenue forgone, and a benefit equal to the amount of unpaid duties within the meaning of sections 771(5)(D)(iii) and 771(5)(E) of the Act, respectively. *Id.* No new information or evidence of changed circumstances has been submitted in this proceeding to warrant reconsideration of this finding. Therefore, in the instant review, we preliminarily continue to find the electricity duty exemptions to the company under this program provide a financial contribution in the form of revenue forgone and are regionally specific within the meaning of sections 771(5)(D)(iii) and 771(5A)(D)(iv) of the Act, respectively. Furthermore, as explained above, we preliminarily find, as AFA, pursuant to section 776(b) of the Act, Tata used and benefitted from this program, within the meaning of 771(5)(E) of the Act.

Pursuant to the AFA methodology described above, for this program, we are assigning a net subsidy rate of 3.09

percent *ad valorem,* which corresponds to the highest above *de minimis* subsidy rate calculated for a similar program in another segment of this proceeding. *See* Final Results of Second HRS Review Decision Memorandum at "State Government of Gujarat (SGOG) Tax Incentives" section.

4. Refunds of Octroi Under the PSI of 1993, Maharashtra Industrial Policy (MIP of 2001), and Maharashtra Industrial Policy (MIP of 2006)

In the *Preliminary Affirmative Countervailing Duty Determination and Alignment of Final Countervailing Determination With Final Antidumping Duty Determination: Polyethylene Terephthalate Film, Sheet, and Strip (PET Film) from India,* the Department found that the Octroi Refund Scheme is a program under the SGOM's package of incentives, in which industrial establishments that make capital investments in specific regions of Maharashtra are entitled to the refund of Octroi duty, a tax levied by local authorities on goods that enter a town or district. *See Preliminary Affirmative Countervailing Duty Determination and Alignment of Final Countervailing Determination With Final Antidumping Duty Determination: Polyethylene Terephthalate Film, Sheet, and Strip (PET Film) from India,* 66 FR 53390, 53396 (October 22, 2001). In the *Notice of Final Affirmative Countervailing Duty Determination: Polyethylene Terephthalate Film, Sheet, and Strip (PET Film) from India,* the Department found that the Octroi Refund Scheme is specific within the meaning of 771(5A)(D)(i) because it is limited to certain privately-owned industries located within designated geographical regions. *See Notice of Final Affirmative Countervailing Duty Determination: Polyethylene Terephthalate Film, Sheet, and Strip (PET Film) from India,* 67 FR 34905 (May 16, 2002) (*Final Determination PET Film*) and PET Film Investigation Decision Memorandum at "Octroi Refund Scheme" section. We also found that a financial contribution was provided under section 771(5)(D)(i) of the Act. *Id.* In the instant review, we preliminarily continue to find the indirect tax savings to the company under this program provide a financial contribution in the form of revenue forgone and are regionally specific within the meaning of sections 771(5)(D)(i) and 771(5A)(D)(iv) of the Act, respectively. Furthermore, we preliminarily find, as AFA, pursuant to section 776(b) of the Act, Tata used and benefitted from this program, within the meaning of 771(5)(E) of the Act.

Pursuant to the AFA methodology described above, for this program, we are assigning a net subsidy rate of 3.09 percent *ad valorem,* which corresponds to the highest above *de minimis* subsidy rate calculated for a similar program in another segment of this proceeding. *See* Final Results of Second HRS Review Decision Memorandum at "State Government of Gujarat (SGOG) Tax Incentives" section.

5. Loan Guarantees Based on Octroi Refunds by SGOM

In the *Final Determination PET Film,* the Department found that certain long-term loans had been secured on the future payment of the Octroi refund due to the respondent company. We found that the loan guarantee was specific within the meaning of section 771(5A)(D)(i) and (iv) of the Act because the company was only to receive the loan guarantee because of its eligibility for the Octroi Refund Scheme, which is limited to certain privately-owned industries located within designated geographical regions. We also found that the SGOM and the administering authority the State Industrial and Investment Corporation of Maharashtra Limited (SICOM) provided a financial contribution under section 771(5)(D)(i) of the Act through the potential direct transfer of the Octroi refund to pay the company's loans. *See Final Determination PET Film,* and PET Film Investigation Decision Memorandum at "Octroi Refund Scheme" section. No new information or evidence of changed circumstances has been submitted in this proceeding to warrant reconsideration of this finding. In the instant review, as AFA, we preliminarily continue to find, that the SGOM's loan guarantees under this program provide a financial contribution within the meaning of sections 771(5)(D)(i) through a potential direct transfer of the Octroi refund to pay off loans. We also preliminarily find, as AFA, these loan guarantees are specific within the meaning of 771(5A)(D)(iii)(I) of the Act because only companies eligible for the Octroi scheme can receive these loan guarantees. Moreover, we preliminarily find, as AFA, pursuant to section 776(b) of the Act, Tata used and benefitted from this program, within the meaning of 771(5)(E)(iii) of the Act, in the form of the difference in the amount the firm paid on the guaranteed loan and the amount the firm would pay for a comparable loan if there were no government guarantee.

Pursuant to the AFA methodology described above, for this program, we are assigning a net subsidy rate of 1.32 percent *ad valorem,* which corresponds to the highest above *de minimis* subsidy rate calculated for a similar program in another segment of this proceeding. *See* HRS Investigation Decision Memorandum at "Pre- and Post-Shipment Export Financing" section.

6. Infrastructure Assistance for Mega Projects

In the Fourth HRS Review, the Department initiated an investigation into whether under the Maharashtra Industrial Policy (MIP) of 2006, firms investing in what the SGOM deems are Mega Projects are eligible to receive infrastructure subsidies. The Department also investigated whether the SGOM has been providing infrastructure subsidies in the form of tax programs and grants to firms investing in Mega Projects in years prior to the enactment of the MIP of 2006. However, the Department found that the program was not used during the POR. *See Preliminary Results of Fourth HRS Review,* 73 FR at 1598 (unchanged in *Final Results of Fourth HRS Review*). As explained above, as AFA, pursuant to section 776(b) of the Act, we preliminarily find that Tata used and benefitted from this program during the POR. Furthermore, based on AFA, we preliminarily determine that Tata's use of this program constitutes a financial contribution in the form of a direct transfer of funds and a benefit within the meaning of sections 771(5)(D)(i) and 771(5)(E) of the Act. We also preliminarily find based on AFA that the program is limited to firms investing in Mega-Projects and, therefore, is specific within the meaning of section 771(5A)(D)(i) of the Act. *See* Memorandum regarding New Subsidy Allegations for Ispat Industries Limited (Ispat) dated September 14, 2007 (Ispat's New Subsidy Allegations Memo) at "Infrastructure Subsidies to Mega Projects" section on file in the Central Records Unit.

Pursuant to the AFA methodology described above, for this program, we are assigning net subsidy rates of 3.09 and 6.06 percent *ad valorem*, which correspond to the highest above *de minimis* subsidy rates calculated for similar programs in another segment of this proceeding. *See* Final Results of Second HRS Review Decision Memorandum at "State Government of Gujarat (SGOG) Tax Incentives" section and HRS Investigation Decision Memorandum at "The GOI's Forgiveness of SDF Loans to SAIL" section.

7. Land for Less Than Adequate Remuneration

In the Fourth HRS Review, the Department initiated an investigation into whether the SGOM encourages development outside of the Bombay and Pune metropolitan areas by offering low-cost land. However, the Department found that the program was not used during the POR. *See Preliminary Results of Fourth HRS Review*, 73 FR at 1598 (unchanged in *Final Results of Fourth HRS Review*). As explained above, as AFA, pursuant to section 776(b) of the Act, we preliminarily find that Tata used and benefitted from this program during the POR. Furthermore, based on AFA, we preliminarily determine that Tata's use of this program constitutes a financial contribution in the form of land sold for LTAR and confers a benefit within the meaning of sections 771(5)(D)(iii) and 771(5)(E)(iv). We also preliminarily find, based on AFA, that the program is limited to enterprises purchasing land outside of the Bombay and Pune area, and therefore, is specific within the meaning of section 771(5A)(D)(iv) of the Act. *See* Ispat's New Subsidy Allegations Memo at "Land for Less than Adequate Remuneration" section.

Pursuant to the AFA methodology described above, for this program, we are assigning a net subsidy rate of 18.08 percent *ad valorem*, which corresponds to the highest above *de minimis* subsidy rate calculated for a similar program in another segment of this proceeding. *See* Final Results of Fourth HRS Review Decision Memorandum at "Captive Mining Rights of Iron Ore" section.

8. Investment Subsidy

In the Fourth HRS Review, the Department initiated an investigation into whether the SGOM provided investment subsidies to firms in the state of Maharashtra. However, the Department found that the program was not used during the POR. *See Preliminary Results of Fourth HRS Review*, 73 FR at 1598 (unchanged in *Final Results of Fourth HRS Review*). As explained above, as AFA pursuant to section 776(b) of the Act, we preliminarily find that Tata used and benefitted from this program during the POR. Furthermore, based on AFA, we preliminarily determine that Tata's use of this program constitutes a financial contribution in the form of a direct transfer of funds and a benefit within the meaning of sections 771(5)(D)(i) and 771(5)(E) of the Act, respectively. We also preliminarily find, based on AFA, that the program is limited to firms operating outside of the Bombay and Pune metropolitan areas and thus, is specific within the meaning of section 771(5A)(D)(iv) of the Act. *See* Ispat's New Subsidy Allegations Memo at "Investment Subsidy" section.

Pursuant to the AFA methodology described above, for this program, we are assigning a net subsidy rate of 6.06 percent *ad valorem,* which corresponds to the highest above *de minimis* subsidy rate calculated for a similar program in another segment of this proceeding. *See* HRS Investigation Decision Memorandum at "Forgiveness of SDF Loans to SAIL" section.

D. Programs Administered by the State Government of Andhra Pradesh (SGAP)

1. Grant Under the Industrial Investment Promotion Policy of 2005–2010 (Andhra Pradesh IP): 25 Percent Reimbursement of Cost of Land in Industrial Estates and Industrial Development Areas

In the Fourth HRS Review, the Department initiated an investigation into whether under the Andhra Pradesh IP, companies from eligible industries which construct new facilities or substantially expand existing facilities and begin commercial production on or after April 1, 2005, may receive certain subsidies from the SGAP. However, the Department found that the program was not used during the POR. *See Preliminary Results of Fourth HRS Review*, 73 FR at 1598 (unchanged in *Final Results of Fourth HRS Review*). As explained above, as AFA pursuant to section 776(b) of the Act, we preliminarily find that Tata used and benefitted from this program during the POR. Furthermore, based on AFA, we preliminarily determine that this program constitutes a financial contribution in the form of a direct transfer of funds, and a benefit within the meaning of sections 771(5)(D)(i) and 771(5)(E) of the Act, respectively. We also preliminarily find, based on AFA, that the SGAP limits the grants under its Industrial Policy program to a limited number of industries operating mega projects and therefore, is specific within the meaning of section 771(5A)(D)(i) of the Act. *See* Memorandum regarding New Subsidy Allegations for Essar Steel Limited dated October 4, 2007 (Essar's New Subsidy Allegation Memo) at "GAP Grants, Tax Programs and other Subsidies Under the Industrial Investment Promotion Policy 2005–2010 (GOAP Industrial Policy)" section on file in the CRU.

Pursuant to the AFA methodology described above, for this program, we are assigning a net subsidy rate of 6.06 percent *ad valorem*, which corresponds to the highest above *de minimis* subsidy rate calculated for a similar program in another segment of this proceeding. *See* HRS Investigation Decision Memorandum at "Forgiveness of SDF Loans to SAIL" section.

2. Grant Under the Industrial Investment Promotion Policy of 2005–2010 (Andhra Pradesh IP): Reimbursement of Power at the Rate of Rs. 0.75 per Unit for the Period Beginning April 1, 2005, Through March 31, 2006 and for the Four Years Thereafter To Be Determined by SGAP

In the Fourth HRS Review, the Department initiated an investigation into whether under the Andhra Pradesh IP, companies from eligible industries which construct new facilities or substantially expand existing facilities and begin commercial production on or after April 1, 2005, may receive certain subsidies from the SGAP. However, the Department found that the program was not used during the POR. *See Preliminary Results of Fourth HRS Review*, 73 FR at 1598 (unchanged in *Final Results of Fourth HRS Review*). As explained above, as AFA pursuant to section 776(b) of the Act, we preliminarily find that Tata used and benefitted from this program during the POR. Furthermore, based on AFA, we preliminarily determine that this program constitutes a financial contribution in the form of a direct transfer of funds, and a benefit within the meaning of sections 771(5)(D)(i) and 771(5)(E) of the Act, respectively. We also preliminarily find, based on AFA, that the SGAP limits the grants under its Industrial Policy program to a limited number of industries operating mega projects and therefore, is specific within the meaning of section 771(5A)(D)(i) of the Act. *See* Essar's New Subsidy Allegation Memo at "GAP Grants, Tax Programs and other Subsidies Under the Industrial Investment Promotion Policy 2005–2010 (GOAP Industrial Policy)" section.

Pursuant to the AFA methodology described above, for this program, we are assigning a net subsidy rate of 6.06 percent *ad valorem*, which corresponds to the highest above *de minimis* subsidy rate calculated for a similar program in another segment of this proceeding. *See* HRS Investigation Decision Memorandum at "Forgiveness of SDF Loans to SAIL" section.

3. Grant Under the Industrial Investment Promotion Policy of 2005–2010 (Andhra Pradesh IP): 50 Percent Subsidy for Expenses Incurred for Quality Certification up to Rs. 100 Lakhs

In the Fourth HRS Review, the Department initiated an investigation into whether under the Andhra Pradesh IP, companies from eligible industries which construct new facilities or substantially expand existing facilities and begin commercial production on or after April 1, 2005, may receive certain subsidies from the SGAP. However, the Department found that the program was not used during the POR. *See Preliminary Results of Fourth HRS Review*, 73 FR at 1598 (unchanged in *Final Results of Fourth HRS Review*). As explained above, as AFA pursuant to section 776(b) of the Act, we preliminarily find that Tata used and benefitted from this program during the POR. Furthermore, based on AFA, we preliminarily determine that this program constitutes a financial contribution in the form of a direct transfer of funds, and a benefit within the meaning of sections 771(5)(D)(i) and 771(5)(E) of the Act, respectively. We also preliminarily find, based on AFA, that the SGAP limits the grants under its Industrial Policy program to a limited number of industries operating mega projects and therefore, is specific within the meaning of section 771(5A)(D)(i) of the Act. *See* Essar's New Subsidy Allegation Memo at "GAP Grants, Tax Programs and other Subsidies Under the Industrial Investment Promotion Policy 2005–2010 (GOAP Industrial Policy)" section.

Pursuant to the AFA methodology described above, for this program, we are assigning a net subsidy rate of 6.06 percent *ad valorem*, which corresponds to the highest above *de minimis* subsidy rate calculated for a similar program in another segment of this proceeding. *See* HRS Investigation Decision Memorandum at "Forgiveness of SDF Loans to SAIL" section.

4. Grant Under the Industrial Investment Promotion Policy of 2005–2010 (Andhra Pradesh IP): A 25 Percent Subsidy on Cleaner Production Measures up to Rs. 5 Lakhs

In the Fourth HRS Review, the Department initiated an investigation into whether under the Andhra Pradesh IP, companies from eligible industries which construct new facilities or substantially expand existing facilities and begin commercial production on or after April 1, 2005, may receive certain subsidies from the SGAP. However, the Department found that the program was not used during the POR. *See Preliminary Results of Fourth HRS Review*, 73 FR at 1598 (unchanged in *Final Results of Fourth HRS Review*). As explained above, as AFA pursuant to section 776(b) of the Act, we preliminarily find that Tata used and benefitted from this program during the POR. Furthermore, based on AFA, we preliminarily determine that this program constitutes a financial contribution in the form of a direct transfer of funds, and a benefit within the meaning of sections 771(5)(D)(i) and 771(5)(E) of the Act, respectively. We also preliminarily find, based on AFA, that the SGAP limits the grants under its Industrial Policy program to a limited number of industries operating mega projects and therefore, is specific within the meaning of section 771(5A)(D)(i) of the Act. *See* Essar's New Subsidy Allegation Memo at "GAP Grants, Tax Programs and other Subsidies Under the Industrial Investment Promotion Policy 2005–2010 (GOAP Industrial Policy)" section.

Pursuant to the AFA methodology described above, for this program, we are assigning a net subsidy rate of 6.06 percent *ad valorem*, which corresponds to the highest above *de minimis* subsidy rate calculated for a similar program in another segment of this proceeding. *See* HRS Investigation Decision Memorandum at "Forgiveness of SDF Loans to SAIL" section.

5. Grant Under the Industrial Investment Promotion Policy of 2005–2010 (Andhra Pradesh IP): A 50 Percent Subsidy on Expenses Incurred in Patent Registration, up to Rs. 5 Lakhs

In the Fourth HRS Review, the Department initiated an investigation into whether under the Andhra Pradesh IP, companies from eligible industries which construct new facilities or substantially expand existing facilities and begin commercial production on or after April 1, 2005, may receive certain subsidies from the SGAP. However, the Department found that the program was not used during the POR. *See Preliminary Results of Fourth HRS Review*, 73 FR at 1598 (unchanged in *Final Results of Fourth HRS Review*). As explained above, as AFA pursuant to section 776(b) of the Act, we preliminarily find that Tata used and benefitted from this program during the POR. Furthermore, based on AFA, we preliminarily determine that this program constitutes a financial contribution in the form of a direct transfer of funds, and a benefit within the meaning of 771(5)(D)(i) and 771(5)(E) of the Act, respectively. We also preliminarily find, based on AFA, that the SGAP limits the grants under its Industrial Policy program to a limited number of industries operating mega projects and therefore, is specific within the meaning of 771(5A)(D)(i) of the Act. *See* Essar's New Subsidy Allegation Memo at "GAP Grants, Tax Programs and other Subsidies Under the Industrial Investment Promotion Policy 2005–2010 (GOAP Industrial Policy)" section.

Pursuant to the AFA methodology described above, for this program, we are assigning a net subsidy rate of 6.06 percent *ad valorem,* which corresponds to the highest above *de minimis* subsidy rate calculated for a similar program in another segment of this proceeding. *See* HRS Investigation Decision Memorandum at "Forgiveness of SDF Loans to SAIL" section.

6. Tax Incentives Under the Industrial Investment Promotion Policy of 2005–2010 (Andhra Pradesh IP): 100 Percent Reimbursement of Stamp Duty and Transfer Duty Paid for the Purchase of Land and Buildings and the Obtaining of Financial Deeds and Mortgages

In the Fourth HRS Review, the Department initiated an investigation into whether under the Andhra Pradesh IP, companies from eligible industries which construct new facilities or substantially expand existing facilities and begin commercial production on or after April 1, 2005, may receive certain subsidies from the SGAP. However, the Department found that the program was not used during the POR. *See Preliminary Results of Fourth HRS Review*, 73 FR at 1598 (unchanged in *Final Results of Fourth HRS Review*). As explained above, as AFA pursuant to section 776(b) of the Act, we preliminarily find that Tata used and benefitted from this program during the POR. Furthermore, based on AFA, we preliminarily determine that this program constitutes a financial contribution in the form of a revenue forgone, and a benefit within the meaning of sections 771(5)(D)(ii) and 771(5)(E) of the Act, respectively. We also preliminarily find, based on AFA, that the SGAP limits the indirect tax benefits under its Industrial Policy program to a limited number of industries operating mega projects and therefore, is specific within the meaning of section 771(5A)(D)(i) of the Act. *See* Essar's New Subsidy Allegation Memo at "GAP Grants, Tax Programs and other Subsidies Under the Industrial Investment Promotion Policy 2005–2010 (GOAP Industrial Policy)" section.

Pursuant to the AFA methodology described above, for this program, we

are assigning a net subsidy rate of 3.09 percent *ad valorem*, which corresponds to the highest above *de minimis* subsidy rate calculated for this program in another segment of this proceeding. *See* Final Results of Second HRS Review Decision Memorandum at "State Government of Gujarat (SGOG) Tax Incentives" section.

7. Tax Incentives Under the Industrial Investment Promotion Policy of 2005–2010 (Andhra Pradesh IP): A Grant of 25 Percent of the Tax Paid to SGAP, Which is Applied as a Credit Against the Tax Owed the Following Year, for a Period of Five Years From the Date of Commencement of Production

In the Fourth HRS Review, the Department initiated an investigation into whether under the Andhra Pradesh IP, companies from eligible industries which construct new facilities or substantially expand existing facilities and begin commercial production on or after April 1, 2005, may receive certain subsidies from the SGAP. However, the Department found that the program was not used during the POR. *See Preliminary Results of Fourth HRS Review*, 73 FR at 1598 (unchanged in *Final Results of Fourth HRS Review*). As explained above, as AFA pursuant to section 776(b) of the Act, we preliminarily find that Tata used and benefitted from this program during the POR. Furthermore, based on AFA, we preliminarily determine that this program constitutes a financial contribution in the form of a revenue forgone, and a benefit within the meaning of sections 771(5)(D)(ii) and 771(5)(E) of the Act, respectively. We also preliminarily find, based on AFA, that the SGAP limits the indirect tax benefits under its Industrial Policy program to a limited number of industries operating mega projects and therefore, is specific within the meaning of section 771(5A)(D)(i) of the Act. *See* Essar's New Subsidy Allegation Memo at "GAP Grants, Tax Programs and other Subsidies Under the Industrial Investment Promotion Policy 2005–2010 (GOAP Industrial Policy)" section.

Pursuant to the AFA methodology described above, for this program, we are assigning a net subsidy rate of 3.09 percent *ad valorem*, which corresponds to the highest above *de minimis* subsidy rate calculated for a similar program in another segment of this proceeding. *See* Final Results of Second HRS Review Decision Memorandum at "State Government of Gujarat (SGOG) Tax Incentives" section.

8. Tax Incentives Under the Industrial Investment Promotion Policy of 2005–2010 (Andhra Pradesh IP): Exemption From the SGAP Non-Agricultural Land Assessment (NALA)

In the Fourth HRS Review, the Department initiated an investigation into whether under the Andhra Pradesh IP, companies from eligible industries which construct new facilities or substantially expand existing facilities and begin commercial production on or after April 1, 2005, may receive certain subsidies from the SGAP. However, the Department found that the program was not used during the POR. *See Preliminary Results of Fourth HRS Review*, 73 FR at1598 (unchanged in *Final Results of Fourth HRS Review*). As explained above, as AFA pursuant to section 776(b) of the Act, we preliminarily find that Tata used and benefitted from this program during the POR. Furthermore, based on AFA, we preliminarily determine that this program constitutes a financial contribution in the form of a revenue forgone, and a benefit within the meaning of sections 771(5)(D)(ii) and 771(5)(E) of the Act, respectively. We also preliminarily find, based on AFA, that the SGAP limits the indirect tax benefits under its Industrial Policy program to a limited number of industries operating mega projects and therefore, is specific within the meaning of section 771(5A)(D)(i) of the Act. *See* Essar's New Subsidy Allegation Memo at "GAP Grants, Tax Programs and other Subsidies Under the Industrial Investment Promotion Policy 2005–2010 (GOAP Industrial Policy)" section.

Pursuant to the AFA methodology described above, for this program we are assigning a net subsidy rate of 3.09 percent *ad valorem*, which corresponds to the highest above *de minimis* subsidy rate calculated for this program in another segment of this proceeding. *See* Final Results of Second HRS Review Decision Memorandum at "State Government of Gujarat (SGOG) Tax Incentives" section.

9. Provision of Goods/Services for Less Than Adequate Remuneration Under the Industrial Investment Promotion Policy of 2005–2010 (Andhra Pradesh IP): Provision of Infrastructure for Industries Located More Than 10 Kilometers From Existing Industrial Estates or Industrial Development Areas

In the Fourth HRS Review, the Department initiated an investigation into whether under the Andhra Pradesh IP, companies from eligible industries which construct new facilities or substantially expand existing facilities and begin commercial production on or after April 1, 2005, may receive certain subsidies from the SGAP. However, the Department found that the program was not used during the POR. *See Preliminary Results of Fourth HRS Review*, 73 FR at1598 (unchanged in *Final Results of Fourth HRS Review*). As explained above, as AFA pursuant to section 776(b) of the Act, we preliminarily find that Tata used and benefitted from this program during the POR. Furthermore, based on AFA, we preliminarily determine that this program constitutes a financial contribution in the form of a provision of a good, and a benefit within the meaning of sections 771(5)(D)(iii) and 771(5)(E) of the Act, respectively. We also preliminarily find, based on AFA, that the SGAP limits the provision of infrastructure under this program to a limited number of industries operating mega projects, and therefore, is specific within the meaning of section 771(5A)(D)(i) of the Act. *See* Essar's New Subsidy Allegation Memo at "GAP Grants, Tax Programs and other Subsidies Under the Industrial Investment Promotion Policy 2005–2010 (GOAP Industrial Policy)" section.

Pursuant to the AFA methodology described above, for this program, we are assigning a net subsidy rate of 18.08 percent *ad valorem*, which corresponds to the highest above *de minimis* subsidy rate calculated for this program in another segment of this proceeding. *See* Final Results of Fourth HRS Review Decision Memorandum at "Captive Mining of Iron Ore" section.

10. Provision of Goods/Services for Less Than Adequate Remuneration Under the Industrial Investment Promotion Policy of 2005–2010 (Andhra Pradesh IP): Guaranteed Stable Prices of Municipal Water for 3 Years for Industrial Use and Reservation of 10% of Water for Industrial Use for Existing and Future Projects

In the Fourth HRS Review, the Department initiated an investigation into whether under the Andhra Pradesh IP, companies from eligible industries which construct new facilities or substantially expand existing facilities and begin commercial production on or after April 1, 2005, may receive certain subsidies from the SGAP. However, the Department found that the program was not used during the POR. *See Preliminary Results of Fourth HRS Review*, 73 FR at 1598 (unchanged in *Final Results of Fourth HRS Review*). As explained above, as AFA pursuant to section 776(b) of the Act, we preliminarily find that Tata used and benefitted from this program during the

POR. Furthermore, based on AFA, we preliminarily determine that this program constitutes a financial contribution in the form of a provision of a good, and a benefit within the meaning of sections 771(5)(D)(iii) and 771(5)(E) of the Act, respectively. We also preliminarily find, based on AFA, that the SGAP limits the provision of municipal water at guaranteed stable prices under its Industrial Policy program to a limited number of industries operating mega projects and therefore, is specific within the meaning of section 771(5A)(D)(i) of the Act. *See* Essar's New Subsidy Allegation Memo at "GAP Grants, Tax Programs and other Subsidies Under the Industrial Investment Promotion Policy 2005–2010 (GOAP Industrial Policy)" section.

Pursuant to the AFA methodology described above, for this program, we are assigning a net subsidy rate of 18.08 percent *ad valorem*, which corresponds to the highest above *de minimis* subsidy rate calculated for a similar program in another segment of this proceeding. *See* Final Results of Fourth HRS Review Decision Memorandum at "Captive Mining of Iron Ore" section.

E. Programs Administered by the State Government of Chhattisgarh (SGOC)

1. Grant Under the Industrial Policy 2004–2009 (Chhattisgarh Industrial Policy): A Direct Subsidy of 35 Percent of Total Capital Cost for the Project, up to a Maximum Amount Equivalent to the Amount of Commercial Tax/Central Sales Tax Paid in a Seven Year Period

In the Fourth HRS Review, the Department initiated an investigation into whether under the Chhattisgarh Industrial Policy (CIP), companies from eligible industries which construct new facilities or substantially expand existing facilities in most backward scheduled tribe dominated areas and begin commercial production between November 1, 2004 and October 31, 2009, may receive certain subsidies from the SGOC. However, the Department found that the program was not used during the POR. *See Preliminary Results of Fourth HRS Review*, 73 FR at 1598 (unchanged in *Final Results of Fourth HRS Review*). As explained above, as AFA pursuant to section 776(b) of the Act, we preliminarily find that Tata used and benefitted from this program during the POR. Furthermore, based on AFA, we preliminarily determine that this program constitutes a financial contribution in the form of a direct transfer of funds, and a benefit within the meaning of sections 771(5)(D)(i) and 771(5)(E) of the Act, respectively. We also preliminarily find, based on AFA, that the SGOC limits eligibility under its Industrial Policy program to certain industries located in certain areas of Chhattisgarh, and therefore, is specific within the meaning of section 771(5A)(D)(i) and (iv) of the Act. *See* Essar's New Subsidy Allegation Memo at "State Government of Chhattusgarh (GOC) Benefits Under the Industrial Investment Promotion Policy 2004–2009 (GOC Industrial Policy)" section.

Pursuant to the AFA methodology described above, for this program, we are assigning a net subsidy rate of 6.06 percent *ad valorem* which corresponds to the highest above *de minimis* subsidy rate calculated for a similar program in another segment of this proceeding. *See* HRS Investigation Decision Memorandum at "Forgiveness of SDF Loans to SAIL" section.

2. Grant Under the Industrial Policy 2004–2009 (Chhattisgarh Industrial Policy): A Direct Subsidy of 40 Percent Toward Total Interest Paid for a Period of 5 Years (up to Rs. Lakh per Year) on Loans and Working Capital for Upgrades in Technology

In the Fourth HRS Review, the Department initiated an investigation into whether under the CIP, companies from eligible industries which construct new facilities or substantially expand existing facilities in most backward scheduled tribe dominated areas and begin commercial production between November 1, 2004 and October 31, 2009, may receive certain subsidies from the SGOC. However, the Department found that the program was not used during the POR. *See Preliminary Results of Fourth HRS Review*, 73 FR at 1598 (unchanged in *Final Results of Fourth HRS Review*). As explained above, as AFA pursuant to section 776(b) of the Act, we preliminarily find that Tata used and benefitted from this program during the POR. Furthermore, based on AFA, we preliminarily determine that this program constitutes a financial contribution in the form of a direct transfer of funds, and a benefit within the meaning of sections 771(5)(D)(i) and 771(5)(E) of the Act, respectively. We also preliminarily find, based on AFA, that the SGOC limits eligibility under its Industrial Policy program to certain industries located in certain areas of Chhattisgarh, and therefore, is specific within the meaning of section 771(5A)(D)(i) and (iv) of the Act. *See* Essar's New Subsidy Allegation Memo at "State Government of Chhattusgarh (GOC) Benefits Under the Industrial Investment Promotion Policy 2004–2009 (GOC Industrial Policy)" section.

Pursuant to the AFA methodology described above, for this program, we are assigning a net subsidy rate of 6.06 percent *ad valorem*, which corresponds to the highest above *de minimis* subsidy rate calculated for a similar program in another segment of this proceeding. *See* HRS Investigation Decision Memorandum at "Forgiveness of SDF Loans to SAIL" section.

3. Grant Under the Industrial Policy 2004–2009 (Chhattisgarh Industrial Policy): Reimbursement of 50 Percent of Expenses (up to Rs. 75,000) Incurred for Quality Certification

In the Fourth HRS Review, the Department initiated an investigation into whether under the CIP, companies from eligible industries which construct new facilities or substantially expand existing facilities in most backward scheduled tribe dominated areas and begin commercial production between November 1, 2004 and October 31, 2009, may receive certain subsidies from the SGOC. However, the Department found that the program was not used during the POR. *See Preliminary Results of Fourth HRS Review*, 73 FR at 1598 (unchanged in *Final Results of Fourth HRS Review*). As explained above, as AFA pursuant to section 776(b) of the Act, we preliminarily find that Tata used and benefitted from this program during the POR. Furthermore, based on AFA, we preliminarily determine that this program constitutes a financial contribution in the form of a direct transfer of funds, and a benefit within the meaning of sections 771(5)(D)(i) and 771(5)(E) of the Act, respectively. We also preliminarily find, based on AFA, that the SGOC limits eligibility under its Industrial Policy program to certain industries located in certain areas of Chhattisgarh, and therefore, is specific within the meaning of section 771(5A)(D)(i) and (iv) of the Act. *See* Essar's New Subsidy Allegation Memo at "State Government of Chhattusgarh (GOC) Benefits Under the Industrial Investment Promotion Policy 2004–2009 (GOC Industrial Policy)" section.

Pursuant to the AFA methodology described above, for this program, we are assigning a net subsidy rate of 6.06 percent *ad valorem,* which corresponds to the highest above *de minimis* subsidy rate calculated for a similar program in another segment of this proceeding. *See* HRS Investigation Decision Memorandum at "Forgiveness of SDF Loans to SAIL" section.

4. Grant Under the Industrial Policy 2004–2009 (Chhattisgarh Industrial Policy): Reimbursement of 50 Percent of Expenses (up to Rs. 5 Lakh) for Obtaining Patents

In the Fourth HRS Review, the Department initiated an investigation into whether under the CIP, companies from eligible industries which construct new facilities or substantially expand existing facilities in most backward scheduled tribe dominated areas and begin commercial production between November 1, 2004 and October 31, 2009, may receive certain subsidies from the SGOC. However, the Department found that the program was not used during the POR. *See Preliminary Results of Fourth HRS Review,* 73 FR at 1598 (unchanged in *Final Results of Fourth HRS Review*). As explained above, as AFA pursuant to section 776(b) of the Act, we preliminarily find that Tata used and benefitted from this program during the POR. Furthermore, based on AFA, we preliminarily determine that this program constitutes a financial contribution in the form of a direct transfer of funds, and a benefit within the meaning of sections 771(5)(D)(i) and 771(5)(E) of the Act, respectively. We also preliminarily find, based on AFA, that the SGOC limits eligibility under its Industrial Policy program to certain industries located in certain areas of Chhattisgarh, and therefore, is specific within the meaning of section 771(5A)(D)(i) and (iv) of the Act. *See* Essar's New Subsidy Allegation Memo at "State Government of Chhattusgarh (GOC) Benefits Under the Industrial Investment Promotion Policy 2004–2009 (GOC Industrial Policy)" section.

Pursuant to the AFA methodology described above, for this program, we are assigning a net subsidy rate of 6.06 percent *ad valorem,* which corresponds to the highest above *de minimis* subsidy rate calculated for a similar program in another segment of this proceeding. *See* HRS Investigation Decision Memorandum at "Forgiveness of SDF Loans to SAIL" section.

5. Tax Incentives Under the Industrial Policy 2004–2009 (Chhattisgarh Industrial Policy): Total Exemption From Electricity Duties for a Period of 15 Years From the Date of Commencement of Commercial Production

In the Fourth HRS Review, the Department initiated an investigation into whether under the CIP, companies from eligible industries which construct new facilities or substantially expand existing facilities in most backward scheduled tribe dominated areas and begin commercial production between November 1, 2004 and October 31, 2009, may receive certain subsidies from the SGOC. However, the Department found that the program was not used during the POR. *See Preliminary Results of Fourth HRS Review,* 73 FR at 1598 (unchanged in *Final Results of Fourth HRS Review*). As explained above, as AFA pursuant to section 776(b) of the Act, we preliminarily find that Tata used and benefitted from this program during the POR. Furthermore, based on AFA, we preliminarily determine that this program constitutes a financial contribution in the form of a revenue forgone, and a benefit within the meaning of sections 771(5)(D)(ii) and 771(5)(E) of the Act, respectively. We also preliminarily find, based on AFA, that the SGOC limits eligibility under its Industrial Policy program to certain industries located in certain areas of Chhattisgarh, and therefore, is specific within the meaning of section 771(5A)(D)(i) and (iv) of the Act. *See* Essar's New Subsidy Allegation Memo at "State Government of Chhattusgarh (GOC) Benefits Under the Industrial Investment Promotion Policy 2004–2009 (GOC Industrial Policy)" section.

Pursuant to the AFA methodology described above, for this program we are assigning a net subsidy rate of 3.09 percent *ad valorem,* which corresponds to the highest above *de minimis* subsidy rate calculated for a similar program in another segment of this proceeding. *See* Final Results of Second HRS Review Decision Memorandum at "State Government of Gujarat (SGOG) Tax Incentives" section.

6. Tax Incentives Under the Industrial Policy 2004–2009 (Chhattisgarh Industrial Policy): Exemption From Stamp Duty on Deeds Executed for Purchase or Lease of Land and Buildings and Deeds Relating to Loans and Advances To Be Taken by the Company for a Period of Three Years From the Date of Registration

In the Fourth HRS Review, the Department initiated an investigation into whether under the CIP, companies from eligible industries which construct new facilities or substantially expand existing facilities in most backward scheduled tribe dominated areas and begin commercial production between November 1, 2004 and October 31, 2009, may receive certain subsidies from the SGOC. However, the Department found that the program was not used during the POR. *See Preliminary Results of Fourth HRS Review,* 73 FR at1598 (unchanged in *Final Results of Fourth HRS Review*). As explained above, as AFA pursuant to section 776(b) of the Act, we preliminarily find that Tata used and benefitted from this program during the POR. Furthermore, based on AFA, we preliminarily determine that this program constitutes a financial contribution in the form of a revenue forgone, and a benefit within the meaning of sections 771(5)(D)(ii) and 771(5)(E) of the Act, respectively. We also preliminarily find, based on AFA, that the SGOC limits eligibility under its Industrial Policy program to certain industries located in certain areas of Chhattisgarh, and therefore, is specific within the meaning of section 771(5A)(D)(i) and (iv) of the Act. *See* Essar's New Subsidy Allegation Memo at "State Government of Chhattusgarh (GOC) Benefits Under the Industrial Investment Promotion Policy 2004–2009 (GOC Industrial Policy)" section.

Pursuant to the AFA methodology described above, for this program we are assigning a net subsidy rate of 3.09 percent *ad valorem,* which corresponds to the highest above *de minimis* subsidy rate calculated for a similar program in another segment of this proceeding. *See* Final Results of Second HRS Review Decision Memorandum at "State Government of Gujarat (SGOG) Tax Incentives" section.

7. Tax Incentives Under the Industrial Policy 2004–2009 (Chhattisgarh Industrial Policy): Exemption From Payment of Entry Tax for 7 Years (Excluding Minerals Obtained From Mining in the State)

In the Fourth HRS Review, the Department initiated an investigation into whether under the CIP, companies from eligible industries which construct new facilities or substantially expand existing facilities in most backward scheduled tribe dominated areas and begin commercial production between November 1, 2004 and October 31, 2009, may receive certain subsidies from the SGOC. However, the Department found that the program was not used during the POR. *See Preliminary Results of Fourth HRS Review,* 73 FR at 1598 (unchanged in *Final Results of Fourth HRS Review*). As explained above, as AFA pursuant to section 776(b) of the Act, we preliminarily find that Tata used and benefitted from this program during the POR. Furthermore, based on AFA, we preliminarily determine that this program constitutes a financial contribution in the form of a revenue forgone, and a benefit within the meaning of sections 771(5)(D)(ii) and 771(5)(E) of the Act, respectively. We also preliminarily find, based on AFA, that the SGOC limits eligibility under its Industrial Policy program to certain industries located in certain areas of

Chhattisgarh, and therefore, is specific within the meaning of section 771(5A)(D)(i) and (iv) of the Act. *See* Essar's New Subsidy Allegation Memo at "State Government of Chhattusgarh (GOC) Benefits Under the Industrial Investment Promotion Policy 2004–2009 (GOC Industrial Policy)" section.

Pursuant to the AFA methodology described above, for this program we are assigning a net subsidy rate of 3.09 percent *ad valorem,* which corresponds to the highest above *de minimis* subsidy rate calculated for a similar program in another segment of this proceeding. *See* Final Results of Second HRS Review Decision Memorandum at "State Government of Gujarat (SGOG) Tax Incentives" section.

8. Tax Incentives Under the Industrial Policy 2004–2009 (Chhattisgarh Industrial Policy): A 50 Percent Reduction of the Service Charges for Acquisition of Private Land by Chhattisgarh Industrial Development Corporation for Use by the Company

In the Fourth HRS Review, the Department initiated an investigation into whether under the CIP, companies from eligible industries which construct new facilities or substantially expand existing facilities in most backward scheduled tribe dominated areas and begin commercial production between November 1, 2004 and October 31, 2009, may receive certain subsidies from the SGOC. However, the Department found that the program was not used during the POR. *See Preliminary Results of Fourth HRS Review,* 73 FR at 1598 (unchanged in *Final Results of Fourth HRS Review*). As explained above, as AFA pursuant to section 776(b) of the Act, we preliminarily find that Tata used and benefitted from this program during the POR. Furthermore, based on AFA, we preliminarily determine that this program constitutes a financial contribution in the form of a revenue forgone, and a benefit within the meaning of sections 771(5)(D)(ii) and 771(5)(E) of the Act, respectively. We also preliminarily find, based on AFA, that the SGOC limits eligibility under its Industrial Policy program to certain industries located in certain areas of Chhattisgarh, and therefore, is specific within the meaning of section 771(5A)(D)(i) and (iv) of the Act. *See* Essar's New Subsidy Allegation Memo at "State Government of Chhattusgarh (GOC) Benefits Under the Industrial Investment Promotion Policy 2004–2009 (GOC Industrial Policy)" section.

Pursuant to the AFA methodology described above, for this program we are assigning a net subsidy rate of 3.09 percent *ad valorem,* which corresponds to the highest above *de minimis* subsidy rate calculated for a similar program in another segment of this proceeding. *See* Final Results of Second HRS Review Decision Memorandum at "State Government of Gujarat (SGOG) Tax Incentives" section.

9. Land for Less Than Adequate Remuneration (LTAR) Under the Industrial Policy 2004–2009 (Chhattisgarh Industrial Policy)

In the Fourth HRS Review, the Department initiated an investigation into whether under the CIP, companies from eligible industries which construct new facilities or substantially expand existing facilities in most backward scheduled tribe dominated areas and begin commercial production between November 1, 2004 and October 31, 2009, may receive certain subsidies from the SGOC. However, the Department found that the program was not used during the POR. *See Preliminary Results of Fourth HRS Review,* 73 FR at 1598 (unchanged in *Final Results of Fourth HRS Review*). As explained above, as AFA pursuant to section 776(b) of the Act, we preliminarily find that Tata used and benefitted from this program during the POR. Furthermore, based on AFA, we preliminarily determine that this program constitutes a financial contribution in the form of a provision of a good, and a benefit within the meaning of sections 771(5)(D)(iii) and 771(5)(E) of the Act, respectively. We also preliminarily find, based on AFA, that the SGOC limits eligibility under its Industrial Policy program to certain industries located in certain areas of Chhattisgarh, and therefore, is specific within the meaning of section 771(5A)(D)(i) and (iv) of the Act. *See* Essar's New Subsidy Allegation Memo at "State Government of Chhattusgarh (GOC) Benefits Under the Industrial Investment Promotion Policy 2004–2009 (GOC Industrial Policy)" section.

Pursuant to the AFA methodology described above, for this program, we are assigning a net subsidy rate of 18.08 percent *ad valorem,* which corresponds to the highest above *de minimis* subsidy rate calculated for this program in another segment of this proceeding. *See* Final Results of Fourth HRS Review Decision Memorandum at "Captive Mining of Iron Ore" section.

F. Programs Administered by the State Government of Jharkhand (SGOJ)

1. Tax Incentives Under the Jharkhand State Industrial Policy (JSIP) of 2001: Exemption of Electricity Duty

Under clause 15.2.2 of the Jharkhand State Industrial Policy (JSIP) of 2001, the SGOJ encourages the private sector in setting up of Captive Power Generation Plants. This program allows large industrial unit, consortium of industrial enterprises in growth centers, or industrial areas to set up power generating units as well as take over distribution of power in such industrial complexes. This captive power generation and purchase is exempted from electricity duty for a period of ten years from the date of commercial production. *See* GOI's April QR, Annex 30 at 15.

As explained above, as AFA pursuant to section 776(b) of the Act, we preliminarily find that Tata used and benefitted from this program during the POR. Furthermore, based on AFA, we preliminarily determine that this program constitutes a financial contribution in the form of a revenue forgone, and a benefit within the meaning of sections 771(5)(D)(ii) and 771(5)(E) of the Act, respectively. We also preliminarily find, based on AFA, that the program is limited to certain industries and, therefore, is specific within the meaning of section 771(5A)(D)(i) of the Act.

Pursuant to the AFA methodology described above, for this program we are assigning a net subsidy rate of 3.09 percent *ad valorem,* which corresponds to the highest above *de minimis* subsidy rate calculated for a similar program in another segment of this proceeding. *See* Final Results of Second HRS Review Decision Memorandum at "State Government of Gujarat (SGOG) Tax Incentives" section.

2. Tax Incentives Under the Jharkhand State Industrial Policy (JSIP) of 2001: Offset of Jharkhand Sales Tax (JST)

Under clause 28 of the JSIP of 2001, new industrial units, as well as existing units which are not using any facility of tax-deferment, tax-free purchases or tax-free sales under any earlier notification, are allowed to opt for an offset of Jharkhand Sales Tax (JST) paid on the purchases of raw materials, within the State of Jharkhand only against transfer or consignment sale outside the state, of finished products made out from such raw materials subject to a limitation of six months or the same financial year from the date of purchase of such raw materials. *See* April QR at 87 and Annex 30 at 27.

As explained above, as AFA pursuant to section 776(b) of the Act, we preliminarily find that Tata used and benefitted from this program during the POR. Furthermore, based on AFA, we preliminarily determine that this program constitutes a financial contribution in the form of revenue

forgone, and a benefit within the meaning of sections 771(5)(D)(ii) and 771(5)(E) of the Act, respectively. We also preliminarily find, based on AFA, that the program is limited to certain industries and, therefore, is specific within the meaning of section 771(5A)(D)(i) of the Act.

Pursuant to the AFA methodology described above, for this program we are assigning a net subsidy rate of 3.09 percent *ad valorem,* which corresponds to the highest above *de minimis* subsidy rate calculated for a similar program in another segment of this proceeding. *See* Final Results of Second HRS Review Decision Memorandum at "State Government of Gujarat (SGOG) Tax Incentives" section.

3. Grants Under the Jharkhand State Industrial Policy (JSIP) of 2001: Capital Investment Incentive

Under clause 29.3 of the JSIP of 2001, a capital investment incentive may be provided only to small and medium scale industries. According to Annexure 1, Entry No. 19 and 11 of the JSIP states that small and medium industries would be defined by the GOI. Pursuant to the terms of S.O. 1642(E) dated September 29, 2006, issued by the GOI, a small industry is one where the investment in plant and machinery is more than Rs. 2.5 million but does not exceed Rs. 50 million; a medium industry is one where the investment in plant and machinery is more than Rs. 50 million but does not exceed Rs. 100 million. *See* GOI's April QR at 87–88 and Annex 30 at 28.

As explained above, as AFA pursuant to section 776(b) of the Act, we preliminarily find that Tata used and benefitted from this program during the POR. Furthermore, based on AFA, we preliminarily determine that this program constitutes a financial contribution in the form of a direct transfer of funds, and a benefit within the meaning of sections 771(5)(D)(i) and 771(5)(E) of the Act, respectively. We also preliminarily find, based on AFA, that the program is limited to certain industries and, therefore, is specific within the meaning of section 771(5A)(D)(i) of the Act.

Pursuant to the AFA methodology described above, for this program, we are assigning a net subsidy rate of 6.06 percent *ad valorem,* which corresponds to the highest above *de minimis* subsidy rate calculated for a similar program in another segment of this proceeding. *See* HRS Investigation Decision Memorandum at "Forgiveness of SDF Loans to SAIL" section.

4. Grants Under the Jharkhand State Industrial Policy (JSIP) of 2001: Capital Power Generating Subsidy

Under clause 29.4 of the JSIP of 2001, a capital power generating subsidy may be provided to new industries. According to Annexure 1, Entry No. 4 of the JSIP, a new industrial unit is a unit that has come into commercial production after November 15, 2000. *See* GOI's April QR at 88 and Annex 30 at 28.

As explained above, as AFA pursuant to section 776(b) of the Act, we preliminarily find that Tata used and benefitted from this program during the POR. Furthermore, based on AFA, we preliminarily determine that this program constitutes a financial contribution in the form of a direct transfer of funds, and a benefit within the meaning of sections 771(5)(D)(i) and 771(5)(E) of the Act, respectively. We also preliminarily find, based on AFA, that the program is limited to certain industries and, therefore, is specific within the meaning of section 771(5A)(D)(i) of the Act.

Pursuant to the AFA methodology described above, for this program, we are assigning a net subsidy rate of 6.06 percent *ad valorem,* which corresponds to the highest above *de minimis* subsidy rate calculated for a similar program in another segment of this proceeding. *See* HRS Investigation Decision Memorandum at "Forgiveness of SDF Loans to SAIL" section.

5. Grants Under the Jharkhand State Industrial Policy (JSIP) of 2001: Interest Subsidy

Under clause 29.5 of the JSIP of 2001, an interest subsidy may be provided to new industries. According to Annexure 1, Entry No. 4 of the JSIP, a new industrial unit is a unit that has come into commercial production after November 15, 2000. *See* GOI's April QR at 88 and Annex 30 at 28.

As explained above, as AFA pursuant to section 776(b) of the Act, we preliminarily find that Tata used and benefitted from this program during the POR. Furthermore, based on AFA, we preliminarily determine that this program constitutes a financial contribution in the form of a direct transfer of funds, and a benefit within the meaning of sections 771(5)(D)(i) and 771(5)(E) of the Act, respectively. We also preliminarily find, based on AFA, that the program is limited to certain industries and, therefore, is specific within the meaning of section 771(5A)(D)(i) of the Act.

Pursuant to the AFA methodology described above, for this program, we are assigning a net subsidy rate of 6.06 percent *ad valorem,* which corresponds to the highest above *de minimis* subsidy rate calculated for a similar program in another segment of this proceeding. *See* HRS Investigation Decision Memorandum at "Forgiveness of SDF Loans to SAIL" section.

6. Tax Incentives Under the Jharkhand State Industrial Policy (JSIP) of 2001: Stamp Duty and Registration

Under clause 29.6 of the JSIP program of 2001, exemption from payment of 50 percent of stamp duty and registration fees upon registration of documents within the State of Jharkhand relating to the purchase or acquisition of land and buildings are provided for setting up a new unit. *See* GOI's April QR at 88 and Annex 30 at 29.

As explained above, as AFA pursuant to section 776(b) of the Act, we preliminarily find that Tata used and benefitted from this program during the POR. Furthermore, based on AFA, we preliminarily determine that this program constitutes a financial contribution in the form of a revenue forgone, and a benefit within the meaning of sections 771(5)(D)(ii) and 771(5)(E) of the Act, respectively. We also preliminarily find, based on AFA, that the program is limited to certain industries and, therefore, is specific within the meaning of section 771(5A)(D)(i) of the Act.

Pursuant to the AFA methodology described above, for this program we are assigning a net subsidy rate of 3.09 percent *ad valorem,* which corresponds to the highest above *de minimis* subsidy rate calculated for a similar program in another segment of this proceeding. *See* Final Results of Second HRS Review Decision Memorandum at "State Government of Gujarat (SGOG) Tax Incentives" section.

7. Grants Under the Jharkhand State Industrial Policy (JSIP) of 2001: Feasibility Study and Project Report Cost Reimbursement

Under clause 29.8 of the JSIP of 2001, 50 percent of the feasibility study and project report cost incurred by industrial units will be reimbursed subject to a maximum of Rs. 50,000 provided the report is prepared by a recognized consultant drawn from duly approved panel by the Industries Department. This reimbursement will be admissible after the commencement of commercial production. *See* GOI's April QR at 88 and Annex 30 at 29.

As explained above, as AFA pursuant to section 776(b) of the Act, we preliminarily find that Tata used and benefitted from this program during the

POR. Furthermore, based on AFA, we preliminarily determine that this program constitutes a financial contribution in the form of a direct transfer of funds, and a benefit within the meaning of sections 771(5)(D)(i) and 771(5)(E) of the Act, respectively. We also preliminarily find, based on AFA, that the program is limited to certain industries and, therefore, is specific within the meaning of section 771(5A)(D)(i) of the Act.

Pursuant to the AFA methodology described above, for this program, we are assigning a net subsidy rate of 6.06 percent *ad valorem,* which corresponds to the highest above *de minimis* subsidy rate calculated for a similar program in another segment of this proceeding. *See* HRS Investigation Decision Memorandum at "Forgiveness of SDF Loans to SAIL" section.

8. Grants Under the Jharkhand State Industrial Policy (JSIP) of 2001: Pollution Control Equipment Subsidy

Under clause 29.9 of the JSIP of 2001, new and existing industrial units are entitled to a subsidy of 20 percent of the cost of pollution control and monitoring equipment subject to a maximum of Rs. 2 million upon installation of pollution control and monitoring equipment allowed on the certificate of the State Pollution Control Board about the necessity for such installation. *See* GOI's April QR at 88 and Annex 30 at 29.

As explained above, as AFA pursuant to section 776(b) of the Act, we preliminarily find that Tata used and benefitted from this program during the POR. Furthermore, based on AFA, we preliminarily determine that this program constitutes a financial contribution in the form of a direct transfer of funds, and a benefit within the meaning of sections 771(5)(D)(i) and 771(5)(E) of the Act, respectively. We also preliminarily find, based on AFA, that the program is limited to certain industries and, therefore, is specific within the meaning of section 771(5A)(D)(i) of the Act.

Pursuant to the AFA methodology described above, for this program, we are assigning a net subsidy rate of 6.06 percent *ad valorem,* which corresponds to the highest above *de minimis* subsidy rate calculated for a similar program in another segment of this proceeding. *See* HRS Investigation Decision Memorandum at "Forgiveness of SDF Loans to SAIL" section.

9. Grants Under the Jharkhand State Industrial Policy (JSIP) of 2001: Incentive for Quality Certification

Under clause 29.10 of the JSIP of 2001, small scale/ancillary industries would be encouraged to seek ISI/ISO certification. In accordance with 29.10, the state government shall facilitate for reimbursement of charges for acquiring ISO–900 (or its equivalent) certification to the extent of 75 percent of the cost subject to a maximum of Rs. 75,000 million from the central government. *See* GOI's April QR at 88–89 and Annex 30 at 30.

As explained above, as AFA pursuant to section 776(b) of the Act, we preliminarily find that Tata used and benefitted from this program during the POR. Furthermore, based on AFA, we preliminarily determine that this program constitutes a financial contribution in the form of a direct transfer of funds, and a benefit within the meaning of sections 771(5)(D)(i) and 771(5)(E) of the Act, respectively. We also preliminarily find, based on AFA, that the program is limited to certain industries and, therefore, is specific within the meaning of section 771(5A)(D)(i) of the Act.

Pursuant to the AFA methodology described above, for this program, we are assigning a net subsidy rate of 6.06 percent *ad valorem,* which corresponds to the highest above *de minimis* subsidy rate calculated for a similar program in another segment of this proceeding. *See* HRS Investigation Decision Memorandum at "Forgiveness of SDF Loans to SAIL" section.

10. Infrastructure Subsidies to Mega Projects: Tax Incentives

In the Fourth HRS Review, the Department initiated an investigation into whether under the JSIP of 2001, the firms investing in what the SGOJ deems are Mega Projects are eligible to receive infrastructure subsidies. The Department further investigated whether the SGOJ has a policy to provide qualifying companies additional subsidies when making capital investment totaling more than Rs. 50 crore as a Mega Project. *See* September 27, 2007 Tata New Subsidies Memorandum at "Subsidies for Mega Projects under the JSIP of 2001" section. However, the Department found that the program was not used during the POR. *See Preliminary Results of Fourth HRS Review,* 73 FR at 1598 (unchanged in *Final Results of Fourth HRS Review*). As explained above, as AFA pursuant to section 776(b) of the Act, we preliminarily find that Tata used and benefitted from this program during the POR. Furthermore, based on AFA, we preliminarily determine that this program constitutes a financial contribution in the form of revenue for gone, and a benefit within the meaning of sections 771(5)(D)(ii) and 771(5)(E) of the Act, respectively. We also preliminarily find, based on AFA, the SGOJ limits eligibility under this program to firms involved in "Mega Projects" on a case-by-case basis and therefore, is specific within the meaning of section 771(5A)(D)(i) of the Act. *See* Memorandum regarding New Subsidy Allegations at "Subsidies for Mega Projects under the JSIP of 2001" section dated September 27, 2007 (Tata's New Subsidy Allegations Memo) on file in the CRU.

Pursuant to the AFA methodology described above, for this program, we are assigning a net subsidy rate of 3.09 percent *ad valorem,* which corresponds to the highest above *de minimis* subsidy rate calculated for a similar program in another segment of this proceeding. *See* Final Results of Second HRS Review Decision Memorandum at "State Government of Gujarat (SGOG) Tax Incentives" section.

11. Infrastructure Subsidies to Mega Projects: Grants

In the Fourth HRS Review, the Department initiated an investigation into whether under the JSIP of 2001, the firms investing in what the SGOJ deems are Mega Projects are eligible to receive infrastructure subsidies. The Department further investigated whether the SGOJ has a policy to provide qualifying companies additional subsidies when making capital investment totaling more than Rs. 50 crore as a Mega Project. *See* Tata's New Subsidies Memorandum at "Subsidies for Mega Projects under the JSIP of 2001" section. However, the Department found that the program was not used during the POR. *See Preliminary Results of Fourth HRS Review,* 73 FR at1598 (unchanged in *Final Results of Fourth HRS Review*). As explained above, as AFA pursuant to section 776(b) of the Act, we preliminarily find that Tata used and benefitted from this program during the POR. Furthermore, based on AFA, we preliminarily determine that this program constitutes a financial contribution in the form of a direct transfer of funds, and a benefit within the meaning of sections 771(5)(D)(i) and 771(5)(E) of the Act, respectively. We also preliminarily find, based on AFA, the SGOJ limits eligibility under this program to firms involved in "Mega Projects" on a case-by-case basis and therefore, is specific within the meaning

of section 771(5A)(D)(i) of the Act. *See* Tata's New Subsidy Allegations Memo at "Subsidies for Mega Projects under the JSIP of 2001" section dated September 27, 2007.

Pursuant to the AFA methodology described above, for this program, we are assigning a net subsidy rate of 6.06 percent *ad valorem,* which corresponds to the highest above *de minimis* subsidy rate calculated for a similar program in another segment of this proceeding. *See* HRS Investigation Decision Memorandum at "Forgiveness of SDF Loans to SAIL"

12. Infrastructure Subsidies to Mega Projects: Loans

In the Fourth HRS Review, the Department initiated an investigation into whether under the JSIP of 2001, the firms investing in what the SGOJ deems are Mega Projects are eligible to receive infrastructure subsidies. The Department further investigated whether the SGOJ has a policy to provide qualifying companies additional subsidies when making capital investment totaling more than Rs. 50 crore as a Mega Project. *See* Tata's New Subsidies Memorandum at "Subsidies for Mega Projects under the JSIP of 2001" section. However, the Department found that the program was not used during the POR. *See Preliminary Results of Fourth HRS Review* 73 FR at 1598 (unchanged in *Final Results of Fourth HRS Review*). As explained above, as AFA pursuant to section 776(b) of the Act, we preliminarily find that Tata used and benefitted from this program during the POR. Furthermore, based on AFA, we preliminarily determine that this program constitutes a financial contribution in the form of a direct transfer of funds, and a benefit within the meaning of sections 771(5)(D)(i) and 771(5)(E) of the Act, respectively. We also preliminarily find, based on AFA, the SGOJ limits eligibility under this program to firms involved in "Mega Projects" on a case-by-case basis and therefore, is specific within the meaning of section 771(5A)(D)(i) of the Act. *See* Tata's New Subsidy Allegations Memo at "Subsidies for Mega Projects under the JSIP of 2001" section dated September 27, 2007.

Pursuant to the AFA methodology described above, for this program, we are assigning a net subsidy rate of 1.32 percent *ad valorem,* which corresponds to the highest above *de minimis* subsidy rate calculated for a similar program in another segment of this proceeding. *See* HRS Investigation Decision Memorandum at "Pre- and Post-Shipment Export Financing".

13. Employment Incentives Under the Jharkhand State Industrial Policy (JSIP) of 2001

Under clause 29.7 of the JSIP of 2001, the employment generation based incentives provided are available to a limited number of industries. *See* GOI's April QR at 88 and Annex 30 at 29. Specifically, the SGOJ pays, for each worker in qualifying industries, 50 percent of the premium paid by the employer under the Contributory Group Insurance Scheme (CGIS). As explained above, as AFA pursuant to section 776(b) of the Act, we preliminarily find that Tata used and benefitted from this program during the POR. Furthermore, based on AFA, we preliminarily determine that this program constitutes a financial contribution in the form of a direct transfer of funds, and a benefit within the meaning of sections 771(5)(D)(i) and 771(5)(E) of the Act, respectively. We also preliminarily find, based on AFA, the SGOJ limits eligibility under this program to firms in certain industries and therefore, is specific within the meaning of section 771(5A)(D)(i) of the Act.

Pursuant to the AFA methodology described above, for this program, we are assigning a net subsidy rate of 6.06 percent *ad valorem,* which corresponds to the highest above *de minimis* subsidy rate calculated for a similar program in another segment of this proceeding. *See* HRS Investigation Decision Memorandum at "Forgiveness of SDF Loans to SAIL"

G. Programs Administered by the State Government of Karnataka (SGOK)

1. SGOK's New Industrial Policy and Package of Incentives and Concessions of 1993 (1993 KIP): Tax Incentives

In the Fourth HRS Review, the Department determined, based on AFA, and in accordance with section 776(b) of the Act that all newly alleged subsidy programs, including the assistance provided under the New Industrial Policy and Package of Incentives and Concessions for the period 1993–1998 (1993 KIP), were used and constitute a financial contribution and are specific pursuant to sections 771(5)(D) and 771(5A) of the Act. *See Preliminary Results of Fourth HRS Review,* 73 FR at 1593 (unchanged in *Final Results of Fourth HRS Review*).

In the instant review, as discussed above in the "Adverse Facts Available" section, based on AFA, and pursuant to section 776(b) of the Act, we preliminarily find that Tata used and benefitted from this program during the POR. Furthermore, based on AFA, we preliminarily determine that this program constitutes a financial contribution in the form of a direct transfer of funds, and a benefit within the meaning of sections 771(5)(D)(ii) and 771(5)(E) of the Act, respectively. We also preliminarily determine, as AFA, that this program is specific pursuant to section 771(5A) of the Act.

Pursuant to the AFA methodology described above, for this program, we are assigning a net subsidy rate of 3.09 percent *ad valorem,* which corresponds to the highest above *de minimis* subsidy rate calculated for a similar program in another segment of this proceeding. *See* Final Results of Second HRS Review Decision Memorandum at "State Government of Gujarat (SGOG) Tax Incentives" section.

2. 1993 KIP: Land at Less Than Adequate Remuneration

As noted above in the "1993 KIP: Tax Incentives" section, in the Fourth HRS Review, the Department determined, based on AFA, and in accordance with section 776(b) of the Act that all newly alleged subsidy programs, including the 1993 KIP, were used and constitute a financial contribution and are specific pursuant to sections 771(5)(D) and 771(5A) of the Act. *See Preliminary Results of Fourth HRS Review,* 73 FR at 1593 (unchanged in *Final Results of Fourth HRC Review*).

In the instant review, as discussed above in the "adverse facts available" section, based on AFA, and pursuant to section 776(b) of the Act, we preliminarily find that Tata used and benefitted from this program during the POR. Furthermore, based on AFA, we preliminarily determine that this program constitutes a financial contribution in the form of provision of a good, and a benefit within the meaning of sections 771(5)(D)(iii) and 771(5)(E) of the Act, respectively. We also preliminarily determine, as AFA, that this program is specific pursuant to section 771(5A) of the Act.

Pursuant to the AFA methodology described above, for this program we are assigning a net subsidy rate of 18.08 percent *ad valorem,* which corresponds to the highest above *de minimis* subsidy rate calculated for a similar program in another segment of this proceeding. *See* Final Results of Fourth HRS Review Decision Memorandum at "Captive Mining of Iron Ore" section.

3. 1993 KIP: Iron Ore, Limestone, and Dolomite at Less Than Adequate Remuneration

As noted above in the "1993 KIP: Tax Incentives" section, in the Fourth HRS Review, the Department determined, based on AFA, and in accordance with

section 776(b) of the Act that all newly alleged subsidy programs, including the 1993 KIP, were used and constitute a financial contribution and are specific pursuant to sections 771(5)(D) and 771(5A) of the Act. *See Preliminary Results of Fourth HRS Review,* 73 FR at 1593 (unchanged in *Final Results of Fourth HRS Review*).

In the instant review, as discussed above in the "Adverse Facts Available" section, based on AFA, and pursuant to section 776(b) of the Act, we preliminarily find that Tata used and benefitted from this program during the POR. Furthermore, based on AFA, we preliminarily determine that this program constitutes a financial contribution in the form of a direct transfer of funds, and a benefit within the meaning of sections 771(5)(D)(iii) and 771(5)(E) of the Act, respectively. We also preliminarily determine, as AFA, that this program is specific pursuant to section 771(5A) of the Act.

Pursuant to the AFA methodology described above, for this program we are assigning a net subsidy rate of 18.08 percent *ad valorem,* which corresponds to the highest above *de minimis* subsidy rate calculated for a similar program in another segment of this proceeding. *See* Final Results of Fourth HRS Review Decision Memorandum at "Captive Mining of Iron Ore" section.

4. 1993 KIP: Power/Electricity at Less Than Adequate Remuneration

As noted above in the "1993 KIP: Tax Incentives" section, in the Fourth HRS Review, the Department determined, based on AFA, and in accordance with section 776(b) of the Act that all newly alleged subsidy programs, including the 1993 KIP, were used and constitute a financial contribution and are specific pursuant to sections 771(5)(D) and 771(5A) of the Act. *See Preliminary Results of Fourth HRS Review,* 73 FR at 1593 (unchanged in *Final Results of Fourth HRS Review*).

In the instant review, as discussed above in the "adverse facts available" section, based on AFA, and pursuant to section 776(b) of the Act, we preliminarily find that Tata used and benefitted from this program during the POR. Furthermore, based on AFA, we preliminarily determine that this program constitutes a financial contribution in the form of a provision of a good, and a benefit within the meaning of sections 771(5)(D)(iii) and 771(5)(E) of the Act, respectively. We also preliminarily determine, as AFA, that this program is specific pursuant to section 771(5A) of the Act.

Pursuant to the AFA methodology described above, for this program, we are assigning a net subsidy rate of 18.08 percent *ad valorem,* which corresponds to the highest above *de minimis* subsidy rate calculated for a similar program in another segment of this proceeding. *See* Final Results of Fourth HRS Review Decision Memorandum at "Captive Mining of Iron Ore" section.

5. 1993 KIP: Water at Less Than Adequate Remuneration

As noted above in the "1993 KIP: Tax Incentives" section, in the Fourth HRS Review, the Department determined, based on AFA, and in accordance with section 776(b) of the Act that all newly alleged subsidy programs, including the 1993 KIP, were used and constitute a financial contribution and are specific pursuant to sections 771(5)(D) and 771(5A) of the Act. *See Preliminary Results of Fourth HRS Review,* 73 FR at 1593 (unchanged in *Final Results of Fourth HRS Review*).

In the instant review, as discussed above in the "adverse facts available" section, based on AFA, and pursuant to section 776(b) of the Act, we preliminarily find that Tata used and benefitted from this program during the POR. Furthermore, based on AFA, we preliminarily determine that this program constitutes a financial contribution in the form of a provision of a good, and a benefit within the meaning of sections 771(5)(D)(iii) and 771(5)(E) of the Act, respectively. We also preliminarily determine, as AFA, that this program is specific pursuant to section 771(5A) of the Act.

Pursuant to the AFA methodology described above, for this program, we are assigning a net subsidy rate of 18.08 percent *ad valorem,* which corresponds to the highest above *de minimis* subsidy rate calculated for a similar program in another segment of this proceeding. *See* Final Results of Fourth HRS Review Decision Memorandum at "Captive Mining of Iron Ore" section.

6. 1993 KIP: Roads and Other Infrastructure at Less Than Adequate Remuneration

As noted above in the "1993 KIP: Tax Incentives" section, in the Fourth HRS Review, the Department determined, based on AFA, and in accordance with section 776(b) of the Act that all newly alleged subsidy programs, including the 1993 KIP, were used and constitute a financial contribution and are specific pursuant to sections 771(5)(D) and 771(5A) of the Act. *See Preliminary Results of Fourth HRS Review,* 73 FR at 1593 (unchanged in *Final Results of Fourth HRS Review*).

In the instant review, as discussed above in the "adverse facts available" section, based on AFA, and pursuant to section 776(b) of the Act, we preliminarily find that Tata used and benefitted from this program during the POR. Furthermore, based on AFA, we preliminarily determine that this program constitutes a financial contribution in the form of a provision of a good, and a benefit within the meaning of sections 771(5)(D)(iii) and 771(5)(E) of the Act, respectively. We also preliminarily determine, as AFA, that this program is specific pursuant to section 771(5A) of the Act.

Pursuant to the AFA methodology described above, for this program, we are assigning a net subsidy rate of 18.08 percent *ad valorem,* which corresponds to the highest above *de minimis* subsidy rate calculated for a similar program in another segment of this proceeding. *See* Final Results of Fourth HRS Review Decision Memorandum at "Captive Mining of Iron Ore" section.

7. 1993 KIP: Port Facilities at Less Than Adequate Remuneration

As noted above in the "1993 KIP: Tax Incentives" section, in the Fourth HRS Review, the Department determined, based on AFA, and in accordance with section 776(b) of the Act that all newly alleged subsidy programs, including the 1993 KIP, were used and constitute a financial contribution and are specific pursuant to sections 771(5)(D) and 771(5A) of the Act. *See Preliminary Results of Fourth HRS Review,* 73 FR at 1593 (unchanged in *Final Results of Fourth HRS Review*).

In the instant review, as discussed above in the "adverse facts available" section, based on AFA, and pursuant to section 776(b) of the Act, we preliminarily find that Tata used and benefitted from this program during the POR. Furthermore, based on AFA, we preliminarily determine that this program constitutes a financial contribution in the form of a provision of a good, and a benefit within the meaning of sections 771(5)(D)(iii) and 771(5)(E) of the Act, respectively. We also preliminarily determine, as AFA, that this program is specific pursuant to section 771(5A) of the Act.

Pursuant to the AFA methodology described above, for this program, we are assigning a net subsidy rate of 18.08 percent *ad valorem,* which corresponds to the highest above *de minimis* subsidy rate calculated for a similar program in another segment of this proceeding. *See* Final Results of Fourth HRS Review Decision Memorandum at "Captive Mining of Iron Ore" section.

8. 1993 KIP: Grants

As noted above in the "1993 KIP: Tax Incentives" section, in the Fourth HRS Review, the Department determined, based on AFA, and in accordance with section 776(b) of the Act that all newly alleged subsidy programs, including the 1993 KIP, were used and constitute a financial contribution and are specific pursuant to sections 771(5)(D) and 771(5A) of the Act. *See Preliminary Results of Fourth HRS Review,* 73 FR at 1593 (unchanged in *Final Results of Fourth HRC Review*).

In the instant review, as discussed above in the "adverse facts available" section, based on AFA, and pursuant to section 776(b) of the Act, we find that Tata used and benefitted from this program during the POR. Furthermore, based on AFA, we determine that this program constitutes a financial contribution in the form of a direct transfer of funds, and a benefit within the meaning of sections 771(5)(D)(i) and 771(5)(E) of the Act, respectively. We also preliminarily determine, as AFA, that this program is specific pursuant to section 771(5A) of the Act.

Pursuant to the AFA methodology described above, for this program, as AFA we are assigning a net subsidy rate of 6.06 percent *ad valorem,* which corresponds to the highest above *de minimis* subsidy rate calculated for a similar program in another segment of this proceeding. *See* HRS Investigation Decision Memorandum at "Forgiveness of SDF Loans to SAIL".

9. 1993 KIP: Loans

As noted above in the "1993 KIP: Tax Incentives" section, in the Fourth HRS Review, the Department determined, based on AFA, and in accordance with section 776(b) of the Act that all newly alleged subsidy programs, including the 1993 KIP, were used and constitute a financial contribution and are specific pursuant to sections 771(5)(D) and 771(5A) of the Act. *See Preliminary Results of Fourth HRS Review,* 73 FR at 1593 (unchanged in *Final Results of Fourth HRS Review*).

In the instant review, as discussed above in the "adverse facts available" section, based on AFA, and pursuant to section 776(b) of the Act, we preliminarily find that Tata used and benefitted from this program during the POR. Furthermore, based on AFA, we preliminarily determine that this program constitutes a financial contribution in the form of a direct transfer of funds, and a benefit within the meaning of sections 771(5)(D)(i) and 771(5)(E) of the Act, respectively. We also preliminarily determine, as AFA, that this program is specific pursuant to section 771(5A) of the Act.

Pursuant to the AFA methodology described above, for this program we are assigning a net subsidy rate of 1.32 percent *ad valorem,* which corresponds to the highest above *de minimis* subsidy rate calculated for a similar program in another segment of this proceeding. *See* HRS Investigation Decision Memorandum at "Pre- and Post-Shipment Export Financing" section.

10. 1993 KIP: Tax Incentives

As noted above in the "1993 KIP: Tax Incentives" section, in the Fourth HRS Review, the Department determined, based on AFA, and in accordance with section 776(b) of the Act that all newly alleged subsidy programs, including the 1993 KIP, were used and constitute a financial contribution and are specific pursuant to sections 771(5)(D) and 771(5A) of the Act. *See Preliminary Results of Fourth HRS Review,* 73 FR at 1593 (unchanged in *Final Results of Fourth HRS Review*).

In the instant review, as discussed above in the "adverse facts available" section, based on AFA, and pursuant to section 776(b) of the Act, we preliminarily find that Tata used and benefitted from this program during the POR. Furthermore, based on AFA, we preliminarily determine that this program constitutes a financial contribution in the form of revenue forgone, and a benefit within the meaning of sections 771(5)(D)(ii) and 771(5)(E) of the Act, respectively. We also preliminarily determine, as AFA, that this program is specific pursuant to section 771(5A) of the Act.

Pursuant to the AFA methodology described above, for this program, we are assigning a net subsidy rate of 3.09 percent *ad valorem,* which corresponds to the highest above *de minimis* subsidy rate calculated for a similar program in another segment of this proceeding. *See* Final Results of Second HRS Review Decision Memorandum at "State Government of Gujarat (SGOG) Tax Incentives" section.11. *SGOK's New Industrial Policy and Package of Incentives and Concessions of 1996 (1996 KIP): Tax Incentives.* As noted above in the "1993 KIP: Tax Incentives" section, in the Fourth HRS Review, the Department determined, based on AFA, and in accordance with section 776(b) of the Act that all newly alleged subsidy programs, including the SGOK's New Industrial Policy and Package of Incentives and Concessions of 1996 (1996 KIP), were used and constitute a financial contribution and are specific pursuant to sections 771(5)(D) and 771(5A) of the Act. *See Preliminary Results of Fourth HRS Review,* 73 FR at 1593 (unchanged in *Final Results of Fourth HRS Review*).

In the instant review, as discussed above in the "adverse facts available" section, based on AFA, and pursuant to section 776(b) of the Act, we preliminarily find that Tata used and benefitted from this program during the POR. Furthermore, based on AFA, we preliminarily determine that this program constitutes a financial contribution in the form of revenue forgone, and a benefit within the meaning of sections 771(5)(D)(ii) and 771(5)(E) of the Act, respectively. We also preliminarily determine, as AFA, that this program is specific pursuant to section 771(5A) of the Act.

Pursuant to the AFA methodology described above, for this program as AFA we are assigning a net subsidy rate of 3.09 percent *ad valorem,* which corresponds to the highest above *de minimis* subsidy rate calculated for a similar program in another segment of this proceeding. *See* Final Results of Second HRS Review Decision Memorandum at "State Government of Gujarat (SGOG) Tax Incentives" section.

12. 1996 KIP: Loans

As noted above in the "1993 KIP: Tax Incentives" section, in the Fourth HRS Review, the Department determined, based on AFA, and in accordance with section 776(b) of the Act that all newly alleged subsidy programs, including the 1996 KIP, were used and constitute a financial contribution and are specific pursuant to sections 771(5)(D) and 771(5A) of the Act. *See Preliminary Results of Fourth HRS Review,* 73 FR at 1593 (unchanged in *Final Results of Fourth HRS Review*).

In the instant review, as discussed above in the "adverse facts available" section, based on AFA, and pursuant to section 776(b) of the Act, we preliminarily find that Tata used and benefitted from this program during the POR. Furthermore, based on AFA, we preliminarily determine that this program constitutes a financial contribution in the form of a direct transfer of funds, and a benefit within the meaning of sections 771(5)(D)(ii) and 771(5)(E) of the Act, respectively. We also preliminarily determine, as AFA, that this program is specific pursuant to section 771(5A) of the Act.

Pursuant to the AFA methodology described above, for this program, we are assigning a net subsidy rate of 1.32 percent *ad valorem,* which corresponds to the highest above *de minimis* subsidy rate calculated for a similar program in another segment of this proceeding. *See* HRS Investigation Decision

Memorandum at "Pre- and Post-Shipment Export Financing."

13. 1996 KIP: Grants

As noted above in the "1993 KIP: Tax Incentives" section, in the Fourth HRS Review, the Department determined, based on AFA, and in accordance with section 776(b) of the Act that all newly alleged subsidy programs, including the 1996 KIP, were used and constitute a financial contribution and are specific pursuant to sections 771(5)(D) and 771(5A) of the Act. *See Preliminary Results of Fourth HRS Review,* 73 FR at 1593 (unchanged in *Final Results of Fourth HRS Review*).

In the instant review, as discussed above in the "adverse facts available" section, based on AFA, and pursuant to section 776(b) of the Act, we preliminarily find that Tata used and benefitted from this program during the POR. Furthermore, based on AFA, we preliminarily determine that this program constitutes a financial contribution in the form of a direct transfer of funds, and a benefit within the meaning of sections 771(5)(D)(i) and 771(5)(E) of the Act, respectively. We also preliminarily determine, as AFA, that this program is specific pursuant to section 771(5A) of the Act.

Pursuant to the AFA methodology described above, for this program, we are assigning a net subsidy rate of 6.06 percent *ad valorem,* which corresponds to the highest above *de minimis* subsidy rate calculated for a similar program in another segment of this proceeding. *See* HRS Investigation Decision Memorandum at "Forgiveness of SDF Loans to SAIL" section.

14. 1996 KIP: Provision of Goods and Services at Less Than Adequate Remuneration (LTAR)

As noted above in the "1993 KIP: Tax Incentives" section, in the Fourth HRS Review, the Department determined, based on AFA, and in accordance with section 776(b) of the Act that all newly alleged subsidy programs, including the 1996 KIP, were used and constitute a financial contribution and are specific pursuant to sections 771(5)(D) and 771(5A) of the Act. *See Preliminary Results of Fourth HRS Review,* 73 FR at 1593 (unchanged in *Final Results of Fourth HRS Review*). In the instant review, as discussed above in the "adverse facts available" section, based on AFA, and pursuant to section 776(b) of the Act, we preliminarily find that Tata used and benefitted from this program during the POR. Furthermore, based on AFA, we preliminarily determine that this program constitutes a financial contribution in the form of a provision of a good or service, and a benefit within the meaning of sections 771(5)(D)(iii) and 771(5)(E) of the Act, respectively. We also preliminarily determine, as AFA, that this program is specific pursuant to section 771(5A) of the Act.

Pursuant to the AFA methodology described above, for this program we are assigning a net subsidy rate of 18.08 percent *ad valorem,* which corresponds to the highest above *de minimis* subsidy rate calculated for a similar program in any segment of this proceeding. *See* Final Results of Fourth HRS Review Decision Memorandum at "Captive Mining of Iron Ore" section.

15. SGOK's New Industrial Policy and Package of Incentives and Concessions of 2001 (2001 KIP): Tax Incentives

As noted above in the "1993 KIP: Tax Incentives" section, in the Fourth HRS Review, the Department determined, based on AFA, and in accordance with section 776(b) of the Act that all newly alleged subsidy programs, including the SGOK's New Industrial Policy and Package of Incentives and Concessions of 2001 (2001 KIP), were used and constitute a financial contribution and are specific pursuant to sections 771(5)(D) and 771(5A) of the Act. *See Preliminary Results of Fourth HRS Review,* 73 FR at 1593 (unchanged in *Final Results of Fourth HRS Review*).

In the instant review, as discussed above in the "adverse facts available" section, based on AFA, and pursuant to section 776(b) of the Act, we preliminarily find that Tata used and benefitted from this program during the POR. Furthermore, based on AFA, we preliminarily determine that this program constitutes a financial contribution in the form of revenue forgone, and a benefit within the meaning of sections 771(5)(D)(ii) and 771(5)(E) of the Act, respectively. We also preliminarily determine, as AFA, that this program is specific pursuant to section 771(5A) of the Act.

Pursuant to the AFA methodology described above, for this program, we are assigning a net subsidy rate of 3.09 percent *ad valorem,* which corresponds to the highest above *de minimis* subsidy rate calculated for a similar program in another segment of this proceeding. *See* Final Results of Second HRS Review Decision Memorandum at "State Government of Gujarat (SGOG) Tax Incentives" section.

16. 2001 KIP: Loans

As noted above in the "1993 KIP: Tax Incentives" section, in the Fourth HRS Review, the Department determined, based on AFA, and in accordance with section 776(b) of the Act that all newly alleged subsidy programs, including the 2001 KIP, were used and constitute a financial contribution and are specific pursuant to sections 771(5)(D) and 771(5A) of the Act. *See Preliminary Results of Fourth HRS Review,* 73 FR at 1593 (unchanged in *Final Results of Fourth HRS Review*).

In the instant review, as discussed above in the "adverse facts available" section, based on AFA, and pursuant to section 776(b) of the Act, we preliminarily find that Tata used and benefitted from this program during the POR. Furthermore, based on AFA, we preliminarily determine that this program constitutes a financial contribution in the form of a direct transfer of funds, and a benefit within the meaning of sections 771(5)(D)(ii) and 771(5)(E) of the Act, respectively. We also preliminarily determine, as AFA, that this program is specific pursuant to section 771(5A) of the Act.

Pursuant to the AFA methodology described above, for this program we are assigning a net subsidy rate of 1.32 percent *ad valorem,* which corresponds to the highest above *de minimis* subsidy rate calculated for a similar program in another segment of this proceeding. *See* HRS Investigation Decision Memorandum at "Pre- and Post-Shipment Export Financing".

17. 2001 KIP: Grants

As noted above in the "1993 KIP: Tax Incentives" section, in the Fourth HRS Review, the Department determined, based on AFA, and in accordance with section 776(b) of the Act that all newly alleged subsidy programs, including the 2001 KIP, were used and constitute a financial contribution and are specific pursuant to sections 771(5)(D) and 771(5A) of the Act. *See Preliminary Results of Fourth HRS Review,* 73 FR at 1593 (unchanged in *Final Results of Fourth HRS Review*).

In the instant review, as discussed above in the "adverse facts available" section, based on AFA, and pursuant to section 776(b) of the Act, we preliminarily find that Tata used and benefitted from this program during the POR. Furthermore, based on AFA, we preliminarily determine that this program constitutes a financial contribution in the form of a direct transfer of funds, and a benefit within the meaning of sections 771(5)(D)(i) and 771(5)(E) of the Act, respectively. We also preliminarily determine, as AFA, that this program is specific pursuant to section 771(5A) of the Act.

Pursuant to the AFA methodology described above, for this program we are assigning a net subsidy rate of 6.06

percent *ad valorem,* which corresponds to the highest above *de minimis* subsidy rate calculated for a similar program in another segment of this proceeding. *See* HRS Investigation Decision Memorandum at "Forgiveness of SDF Loans to SAIL".

18. 2001 KIP: Provision of Goods and Services at Less Than Adequate Remuneration (LTAR)

As noted above in the "1993 KIP: Tax Incentives" section, in the Fourth HRS Review, the Department determined, based on AFA, and in accordance with section 776(b) of the Act that all newly alleged subsidy programs, including the 2001 KIP, were used and constitute a financial contribution and are specific pursuant to sections 771(5)(D) and 771(5A) of the Act. *See Preliminary Results of Fourth HRS Review,* 73 FR at 1593 (unchanged in *Final Results of Fourth HRS Review*).

In the instant review, as discussed above in the "adverse facts available" section, based on AFA, and pursuant to section 776(b) of the Act, we preliminarily find that Tata used and benefitted from this program during the POR. Furthermore, based on AFA, we preliminarily determine that this program constitutes a financial contribution in the form of a provision of a good or service, and a benefit within the meaning of sections 771(5)(D)(iii) and 771(5)(E) of the Act, respectively. We also preliminarily determine, as AFA, that this program is specific pursuant to section 771(5A) of the Act.

Pursuant to the AFA methodology described above, for this program, we are assigning a net subsidy rate of 18.08 percent *ad valorem* which corresponds to the highest above *de minimis* subsidy rate calculated for a similar program in another segment of this proceeding. *See* Final Results of Fourth HRS Review Decision Memorandum at "Captive Mining of Iron Ore" section.

19. SGOK's New Industrial Policy and Package of Incentives and Concession of 2006 (2006 KIP): Loans

As noted above in the "1993 KIP: Tax Incentives" section, in the Fourth HRS Review, the Department determined, based on AFA, and in accordance with section 776(b) of the Act that all newly alleged subsidy programs, including the SGOK's New Industrial Policy and Package of Incentives and Concessions of 2006 (2006 KIP), were used and constitute a financial contribution and are specific pursuant to sections 771(5)(D) and 771(5A) of the Act. *See Preliminary Results of Fourth HRS Review,* 73 FR at 1593 (unchanged in *Final Results of Fourth HRS Review*).

In the instant review, as discussed above in the "adverse facts available" section, based on AFA, and pursuant to section 776(b) of the Act, we preliminarily find that Tata used and benefitted from this program during the POR. Furthermore, based on AFA, we preliminarily determine that this program constitutes a financial contribution in the form of a direct transfer of funds, and a benefit within the meaning of sections 771(5)(D)(i) and 771(5)(E) of the Act, respectively. We also preliminarily determine, as AFA, that this program is specific pursuant to section 771(5A) of the Act.

Pursuant to the AFA methodology described above, for this program, we are assigning a net subsidy rate of 1.32 percent *ad valorem,* which corresponds to the highest above *de minimis* subsidy rate calculated for a similar program in another segment of this proceeding. *See* HRS Investigation Decision Memorandum at "Pre- and Post-Shipment Export Financing" section.

20. 2006 KIP: Tax Incentives

As noted above in the "1993 KIP: Tax Incentives" section, in the Fourth HRS Review, the Department determined, based on AFA, and in accordance with section 776(b) of the Act that all newly alleged subsidy programs, including the 2006 KIP, were used and constitute a financial contribution and are specific pursuant to sections 771(5)(D) and 771(5A) of the Act. *See Preliminary Results of Fourth HRS Review,* 73 FR at 1593 (unchanged in *Final Results of Fourth HRS Review*).

In the instant review, as discussed above in the "adverse facts available" section, based on AFA, and pursuant to section 776(b) of the Act, we preliminarily find that Tata used and benefitted from this program during the POR. Furthermore, based on AFA, we preliminarily determine that this program constitutes a financial contribution in the form of revenue forgone, and a benefit within the meaning of sections 771(5)(D)(ii) and 771(5)(E) of the Act, respectively. We also preliminarily determine, as AFA, that this program is specific pursuant to section 771(5A) of the Act.

Pursuant to the AFA methodology described above, for this program, we are assigning a net subsidy rate of 3.09 percent *ad valorem,* which corresponds to the highest above *de minimis* subsidy rate calculated for a similar program in another segment of this proceeding. *See* Final Results of Second HRS Review Decision Memorandum at "State Government of Gujarat (SGOG) Tax Incentives" section.

21. 2006 KIP: Provision of Goods and Services for Less Than Adequate Remuneration (LTAR)

As noted above in the "1993 KIP: Tax Incentives" section, in the Fourth HRS Review, the Department determined, based on AFA, and in accordance with section 776(b) of the Act that all newly alleged subsidy programs, including the 2006 KIP, were used and constitute a financial contribution and are specific pursuant to sections 771(5)(D) and 771(5A) of the Act. *See Preliminary Results of Fourth HRS Review,* 73 FR at 1593 (unchanged in *Final Results of Fourth HRS Review*).

In the instant review, as discussed above in the "adverse facts available" section, based on AFA, and pursuant to section 776(b) of the Act, we preliminarily find that Tata used and benefitted from this program during the POR. Furthermore, based on AFA, we preliminarily determine that this program constitutes a financial contribution in the form of a provision of a good or service, and a benefit within the meaning of sections 771(5)(D)(iii) and 771(5)(E) of the Act, respectively. We also preliminarily determine, as AFA, that this program is specific pursuant to section 771(5A) of the Act.

Pursuant to the AFA methodology described above, for this program, we are assigning a net subsidy rate of 18.08 percent *ad valorem,* which corresponds to the highest above *de minimis* subsidy rate calculated for a similar program in another segment of this proceeding. *See* Final Results of Fourth HRS Review Decision Memorandum at "Captive Mining of Iron Ore" section.

22. 2006 KIP: Grants

As noted above in the "1993 KIP" Tax Incentives" section, in the Fourth HRS Review, the Department determined, based on AFA, and in accordance with section 776(b) of the Act that all newly alleged subsidy programs, including the 2006 KIP, were used and constitute a financial contribution and are specific pursuant to sections 771(5)(D) and 771(5A) of the Act. *See Preliminary Results of Fourth HRS Review,* 73 FR at 1593 (unchanged in *Final Results of Fourth HRS Review*).

In the instant review, as discussed above in the "adverse facts available" section, based on AFA, and pursuant to section 776(b) of the Act, we preliminarily find that Tata used and benefitted from this program during the POR. Furthermore, based on AFA, we preliminarily determine that this

program constitutes a financial contribution in the form of a direct transfer of funds, and a benefit within the meaning of sections 771(5)(D)(i) and 771(5)(E) of the Act, respectively. We also preliminarily determine, as AFA, that this program is specific pursuant to section 771(5A) of the Act.

Pursuant to the AFA methodology described above, for this program, we are assigning a net subsidy rate of 6.06 percent *ad valorem,* which corresponds to the highest above *de minimis* subsidy rate calculated for a similar program in another segment of this proceeding. *See* HRS Investigation Decision Memorandum at "Forgiveness of SDF Loans to SAIL."

Programs Preliminarily Determined To Be Terminated

1. Exemption of Export Credit From Interest Taxes

Indian commercial banks were required to pay a tax on all interest accrued from borrowers. The banks passed along this interest tax to borrowers in its entirety. As of April 1, 1993, the GOI exempted from the interest tax all interest accruing to a commercial bank on export-related loans. The Department has previously found this tax exemption to be an export subsidy, and thus countervailable, because only interest accruing on loans and advanced made to exporters in this form of export curedti was exempt from interest tax. *See e.g., Final Results of Countervailing Duty Administrative Review: Certain Iron-Metal Castings From India,* 61 FR 64676, 64686 (December 6, 1996).

In the instant review, the GOI reported in its April QR that pursuant to the Finance Act of 2000, the GOI has abolished the Interest Tax. *See* April QR at 68. The GOI provided a copy of circular DBOD.No.BP.BC.187/21/02/007/2000 dated June 29, 2000, which gives notice to commercial banks that the interest tax has been discontinued regarding chargeable interest accruing after March 31, 2000. *See* April QR at Annex 25. In the Carbazole Violet Pigment Countervailing Duty Investigation, the Department found that this program has been terminated in accordance with section 351.526(d). *See Notice of Preliminary Affirmative Countervailing Duty Determination and Alignment with Final Antidumping Duty Determination: Carbazole Violet Pigment 23 from India,* 69 FR 22763, 22768 (April 27, 2004) and *Final Affirmative Countervailing Duty Determination: Carbazole Violet Pigment 23 from India,* 69 FR 67321 (November 17, 2004) and accompanying Issues and Decision Memorandum at "Program Determined To Be Terminated" (Carbazole Violet Pigment Countervailing Duty Investigation). Because we have already found that this program has been terminated effective March 31, 2000, there were no benefits during the POR.

Preliminary Results of Review

In accordance with 19 CFR 351.221(b)(4)(i), we calculated an individual subsidy rate for the reviewed company for the period January 1, 2008, through December 31, 2008. We preliminarily determine the net subsidy rate for Tata to be 586.43 percent *ad valorem.*

If the final results remain the same as these preliminary results, the Department intends to issue assessment instructions to U.S. Customs and Border Protection (CBP) 15 days after the date of publication of the final results of this review. We will instruct CBP to collect cash deposits for the respondent at the countervailing duty rate indicated above of the f.o.b. invoice price on all shipments of subject merchandise entered, or withdrawn from warehouse, for consumption on or after the date of publication of the final results of this review. We will also instruct CBP to continue to collect cash deposits for non-reviewed companies at the most recent company-specific or country-wide rate applicable to the company.

These deposit requirements, when imposed, shall remain in effect until further notice.

Public Comment

Pursuant to 19 CFR 351.224(b), the Department will disclose to parties to the proceeding any calculations performed in connection with these preliminary results within five days after the date of the public announcement of this notice. Pursuant to 19 CFR 351.309(b)(1), interested parties may submit written arguments in response to these preliminary results. Unless otherwise indicated by the Department, case briefs must be submitted within 30 days after the date of publication of this notice, and rebuttal briefs, limited to arguments raised in case briefs, must be submitted no later than five days after the time limit for filing case briefs. See 19 CFR 351.309(c)(1)(ii). Parties who submit written arguments in this proceeding are requested to submit with the written argument: (1) A statement of the issue, and (2) a brief summary of the argument. Parties submitting case and/or rebuttal briefs are requested to provide the Department copies of the public version on disk. Case and rebuttal briefs must be served on interested parties in accordance with 19 CFR 351.303(f). Also, pursuant to 19 CFR 351.310, within 30 days of the date of publication of this notice, interested parties may request a public hearing on arguments to be raised in the case and rebuttal briefs. Unless the Secretary specifies otherwise, the hearing, if requested, will be held two days after the date for submission of rebuttal briefs.

Representative of parties to the proceeding may request disclosure of proprietary information under administrative protective order no later than 10 days after the representative's client or employer becomes a party to the proceeding, but in no event later than the date the case briefs, under 19 CFR 351.309(c)(1)(ii), are due. The Department will publish the final results of this administrative review, including the results of its analysis of arguments made in any case or rebuttal briefs.

These preliminary results of review are issued and published in accordance with sections 751(a)(1) and 777(i)(1) of the Act and 19 CFR 351.221(b)(4).

Dated: December 31, 2009.

Susan H. Kuhbach,

Acting Deputy Assistant Secretary for Import Administration.

[FR Doc. 2010–129 Filed 1–8–10; 8:45 am]

BILLING CODE 3510–DS–P

Reader Aids

Federal Register

Vol. 75, No. 6

Monday, January 11, 2010

CUSTOMER SERVICE AND INFORMATION

Federal Register/Code of Federal Regulations	
General Information, indexes and other finding aids	**202–741–6000**
Laws	**741–6000**
Presidential Documents	
Executive orders and proclamations	**741–6000**
The United States Government Manual	**741–6000**
Other Services	
Electronic and on-line services (voice)	**741–6020**
Privacy Act Compilation	**741–6064**
Public Laws Update Service (numbers, dates, etc.)	**741–6043**
TTY for the deaf-and-hard-of-hearing	**741–6086**

ELECTRONIC RESEARCH

World Wide Web

Full text of the daily Federal Register, CFR and other publications is located at: **http://www.gpoaccess.gov/nara/index.html**

Federal Register information and research tools, including Public Inspection List, indexes, and links to GPO Access are located at: **http://www.archives.gov/federal__register**

E-mail

FEDREGTOC-L (Federal Register Table of Contents LISTSERV) is an open e-mail service that provides subscribers with a digital form of the Federal Register Table of Contents. The digital form of the Federal Register Table of Contents includes HTML and PDF links to the full text of each document.

To join or leave, go to **http://listserv.access.gpo.gov** and select *Online mailing list archives, FEDREGTOC-L, Join or leave the list (or change settings);* then follow the instructions.

PENS (Public Law Electronic Notification Service) is an e-mail service that notifies subscribers of recently enacted laws.

To subscribe, go to **http://listserv.gsa.gov/archives/publaws-l.html** and select *Join or leave the list (or change settings);* then follow the instructions.

FEDREGTOC-L and **PENS** are mailing lists only. We cannot respond to specific inquiries.

Reference questions. Send questions and comments about the Federal Register system to: **fedreg.info@nara.gov**

The Federal Register staff cannot interpret specific documents or regulations.

Reminders. Effective January 1, 2009, the Reminders, including Rules Going Into Effect and Comments Due Next Week, no longer appear in the Reader Aids section of the Federal Register. This information can be found online at **http://www.regulations.gov.**

CFR Checklist. Effective January 1, 2009, the CFR Checklist no longer appears in the Federal Register. This information can be found online at **http://bookstore.gpo.gov/.**

FEDERAL REGISTER PAGES AND DATE, JANUARY

1–218 4
219–736 5
737–884 6
885–1012 7
1013–1268 8
1269–1524 11

CFR PARTS AFFECTED DURING JANUARY

At the end of each month, the Office of the Federal Register publishes separately a List of CFR Sections Affected (LSA), which lists parts and sections affected by documents published since the revision date of each title.

3 CFR

Proclamations:
8469 885
8470 1265
8471 1267
Executive Orders:
12958 (Revoked by 13526) 707
13292 (Revoked by 13526) 707
13526 ..... 707, 1013
13527 737
Administrative Orders:
Memorandums:
Memorandum of December 15, 2009 1015
Memorandum of December 29, 2009 733
Orders:
Order of December 29, 2009 735

7 CFR

305 1
319 1
980 1269
993 1269
1400 887

10 CFR

50 13
430 652
431 ..... 652, 1122
Proposed Rules:
431 186

11 CFR

1 29
2 29
4 29
5 29
100 29
101 29
102 29
104 29
110 29
113 29
114 29
201 29
300 29

12 CFR

229 219
925 678
944 678
1263 678
1290 678
Proposed Rules:
360 934
906 1289
1207 1289

13 CFR

Proposed Rules:
121 1296
124 1296

14 CFR

25 ..... 32, 35, 37, 39
39 ..... 221, 224, 901, 904, 906, 910, 1017
71 ..... 42, 43, 226
97 ..... 915, 916
121 739
Proposed Rules:
25 ..... 75, 81
27 ..... 793, 942
29 ..... 793, 942
39 ..... 89, 91, 258, 260, 262, 264, 801, 950, 1297
91 942
121 942
125 942
135 942

15 CFR

90 44
738 1028
902 554
Proposed Rules:
922 952

17 CFR

275 ..... 742, 1456
276 1492
279 1456

19 CFR

Proposed Rules:
101 266
113 266
133 266

20 CFR

416 1271

21 CFR

522 1274
529 1021
558 1275

23 CFR

635 46

26 CFR

301 48
Proposed Rules:
1 1301
301 94

30 CFR

250 1276

31 CFR

1 743
285 745

Proposed Rules:

240 95

32 CFR

724 746

33 CFR

100 748
117 227
138 750
165 754

Proposed Rules:

147 803

39 CFR

3020 1280

Proposed Rules:

111 282
3050 1301

40 CFR

52 ....54, 56, 230, 232, 1284
63 522
81 56
180 ....760, 763, 767, 770
262 1236
263 1236
264 1236
265 1236
266 1236
271 ....918, 1236
700 773
721 773
723 773
725 773

Proposed Rules:

52 ....97, 283, 953, 958
180 807
320 816
721 1180

41 CFR

301–10 790

44 CFR

64 60

47 CFR

25 1285

48 CFR

Proposed Rules:

225 832
252 832
928 964
931 964
932 964
933 964
935 964
936 964
937 964
941 964
942 964
949 964
950 964
951 964
952 964

49 CFR

171 63
172 63
173 63
175 63
178 63
238 1180
830 922

Proposed Rules:

172 1302
173 1302
175 1302
395 285

50 CFR

17 235
21 927
22 927
300 554
635 250
648 1021
660 932
665 1023
679 ....554, 792

Proposed Rules:

300 1324
17 ....286, 310, 606
223 ....316, 838
224 ....316, 838
226 319
648 1024

LIST OF PUBLIC LAWS

This is a continuing list of public bills from the current session of Congress which have become Federal laws. It may be used in conjunction with ''P L U S'' (Public Laws Update Service) on 202–741–6043. This list is also available online at *http://www.archives.gov/federal-register/laws.html*.

The text of laws is not published in the **Federal Register** but may be ordered in ''slip law'' (individual pamphlet) form from the Superintendent of Documents, U.S. Government Printing Office, Washington, DC 20402 (phone, 202–512–1808). The text will also be made available on the Internet from GPO Access at *http://www.gpoaccess.gov/plaws/index.html*. Some laws may not yet be available.

H.R. 4314/P.L. 111–123
To permit continued financing of Government operations. (Dec. 28, 2009; 123 Stat. 3483)

H.R. 4284/P.L. 111–124
To extend the Generalized System of Preferences and the Andean Trade Preference Act, and for other purposes. (Dec. 28, 2009; 123 Stat. 3484)

H.R. 3819/P.L. 111–125
To extend the commercial space transportation liability regime. (Dec. 28, 2009; 123 Stat. 3486)

Last List December 31, 2009

Public Laws Electronic Notification Service (PENS)

PENS is a free electronic mail notification service of newly enacted public laws. To subscribe, go to *http://listserv.gsa.gov/archives/publaws-l.html*

Note: This service is strictly for E-mail notification of new laws. The text of laws is not available through this service. **PENS** cannot respond to specific inquiries sent to this address.