AUTHENTICATED
U.S. GOVERNMENT
INFORMATION
GPO

Federal Register

Monday,
June 22, 2009

Part II

Department of Transportation

National Highway Traffic Safety Administration

49 CFR Part 575

Tire Fuel Efficiency Consumer Information Program; Proposed Rule

DEPARTMENT OF TRANSPORTATION

National Highway Traffic Safety Administration

49 CFR Part 575

[Docket No. NHTSA–2008–0121]

RIN 2127–AK45

Tire Fuel Efficiency Consumer Information Program

AGENCY: National Highway Traffic Safety Administration, Department of Transportation (NHTSA).

ACTION: Notice of proposed rulemaking (NPRM).

SUMMARY: This document proposes a broad new consumer information program for replacement tires to inform consumers about the effect of tires on fuel efficiency, safety, and durability. This consumer information program would implement a national tire fuel efficiency rating system for replacement tires, with the information provided to consumers at the point of sale and online. Fuel efficiency ratings are expected to inform consumers so that they will be better informed about replacement tire performance. This consumer information program seeks to enhance energy security and reduce costs by improving fuel economy. Information would also be provided about safety and durability.

DATES: Comments to this proposal must be received on or before August 21, 2009. In compliance with the Paperwork Reduction Act, NHTSA is also seeking comment on a new information collection. *See* the Paperwork Reduction Act section under Regulatory Notices and Analyses below. Please submit all comments relating to new information collection requirements on or before August 21, 2009.

ADDRESSES: You may submit comments, identified by the docket number in the heading of this document, by any of the following methods:

- *Federal eRulemaking Portal:* Go to *http://www.regulations.gov*. Follow the instructions for submitting comments on the electronic docket site by clicking on ''Help'' or ''FAQ.''
- *Mail:* Docket Management Facility, M–30, U.S. Department of Transportation, 1200 New Jersey Avenue, SE., West Building, Ground Floor, Room W12–140, Washington, DC 20590.
- *Hand Delivery:* 1200 New Jersey Avenue, SE., West Building Ground Floor, Room W12–140, between 9 a.m. and 5 p.m. Eastern Time, Monday through Friday, except Federal holidays.
- *Fax:* 202–493–2251.

Regardless of how you submit comments, you should mention the docket number of this document.

You may call the Docket Management Facility at 202–366–9826.

Instructions: For detailed instructions on submitting comments and additional information on the rulemaking process, *see* the Public Participation heading of the **SUPPLEMENTARY INFORMATION** section of this document. Note that all comments received will be posted without change to *http://www.regulations.gov,* including any personal information provided.

Privacy Act: Anyone is able to search the electronic form of all comments received into any of our dockets by the name of the individual submitting the comment (or signing the comment, if submitted on behalf of an association, business, labor union, *etc.*). You may review DOT's complete Privacy Act Statement in the **Federal Register** published on April 11, 2000 (65 FR 19477–78) or you may visit *http://www.dot.gov/privacy.html*.

Docket: For access to the docket to read background documents or comments received, go to *http://www.regulations.gov,* or the street address listed above. Follow the online instructions for accessing the dockets.

FOR FURTHER INFORMATION CONTACT:

For policy and technical issues: Ms. Julie Abraham or Ms. Mary Versailles, Office of Rulemaking, National Highway Traffic Safety Administration, 1200 New Jersey Avenue, SE., Washington, DC 20590. Telephone: (202) 366–0846.

For legal issues: Mr. Stephen Wood or Ms. Sarah Alves, Office of the Chief Counsel, National Highway Traffic Safety Administration, 1200 New Jersey Avenue, SE., Washington, DC 20590. Telephone: (202) 366–2992.

SUPPLEMENTARY INFORMATION:

Table of Contents

I. Executive Overview
A. Summary
B. Energy Independence and Security Act of 2007
C. Proposal
1. Test Procedures
2. Proposed Rolling Resistance Rating Metric
3. Proposed Label
4. Proposed Information Dissemination and Reporting Requirements for Tire Manufacturers and Tire Retailers
5. Consumer Education Program
D. Costs and Benefits
E. Lead Time
II. Background
A. Contribution of Tire Maintenance and Tire Fuel Efficiency to Addressing Energy Independence and Security
1. Tire Fuel Efficiency and Rolling Resistance
2. Relationship Between Tire Maintenance and Tire Fuel Efficiency and Vehicle Fuel Economy
3. 2006 National Academy of Sciences Report
4. California
5. European Union
6. Japan
B. Energy Independence and Security Act of 2007 Mandated Consumer Tire Information Program
1. Tires Subject to the Consumer Information Program
2. Mandate To Create a National Tire Fuel Efficiency Rating System
3. Communicating Information to Consumers
4. Specification of Test Methods
5. Creating a National Consumer Education Program on Tire Maintenance
6. Consultation in Setting Standards
7. Application With State and Local Laws and Regulations
8. Compliance and Enforcement
9. Reporting to Congress
III. Which Tires Must Be Rated?
A. Passenger Car Tires
B. Replacement Tires
C. Tires within a Tire Model
D. Tires Excluded
IV. Rolling Resistance Test Procedure
A. Rolling Resistance
B. Possible Test Procedures Available to Measure Rolling Resistance
C. NHTSA Research Results
D. Why Select a Single-Point Test Instead of Multi-Point?
E. Why Select ISO 28580 Instead of Other Tests?
V. Proposed Rolling Resistance Rating Metric
VI. Proposed Rating System
A. What Should We Convey to Consumers in a Rating System?
1. Fuel Efficiency
2. Safety
i. Potential Safety Consequences
ii. Test Procedure
3. Durability
4. Overall Rating
B. How Should We Convey the Information to Consumers in a Rating System?
1. Proposed Rating Formulas
i. Fuel Efficiency
ii. Safety
iii. Durability
2. Proposed Label Style
VII. Proposed Information Dissemination and Reporting Requirements for Tire Manufacturers and Tire Retailers
A. The Replacement Passenger Car Tire Market
B. Assumptions about the Average Tire Purchaser and the Average Tire Purchasing Process
C. What Are We Proposing To Require of Tire Retailers?
D. What Are We Proposing To Require of Tire Manufacturers?
1. Data Reporting
2. Tire Labels
E. Requirements for Tire Retailers and Tire Manufacturers With an Internet Presence
F. Uniform Tire Quality Grading Standards
VIII. NHTSA's Consumer Education Program
A. Previous Tire Consumer Education Efforts

B. Potential Future Consumer Education Efforts
1. What Information Should NHTSA Convey?
2. Point of Sale
3. Interactive Mediums
4. Web Site Development
5. Paper Brochure Materials
6. Partnership Development
7. Exhibits and Conferencing
8. Local Education Programs
IX. Costs and Benefits
A. Costs
B. Benefits
X. Lead Time
XI. Compliance Tolerances
A. Fuel Efficiency
B. Safety
C. Durability
XII. Regulatory Alternatives
XIII. Public Participation
XIV. Regulatory Notices and Analyses
A. Executive Order 12866 and DOT Regulatory Policies and Procedures
B National Environmental Policy Act
C. Regulatory Flexibility Act
D. Executive Order 13132 (Federalism)
E. Executive Order 12988 (Civil Justice Reform)
F. Unfunded Mandates Reform Act
G. Paperwork Reduction Act
H. Executive Order 13045
I. National Technology Transfer and Advancement Act
J. Executive Order 13211
K. Regulation Identifier Number (RIN)
L. Plain Language
M. Privacy Act

I. Executive Overview

A. Summary

This document is being issued pursuant to the Energy Independence and Security Act of 2007 (EISA),[1] which was enacted in December 2007. EISA included a requirement that NHTSA develop a national tire fuel efficiency consumer information program to educate consumers about the effect of tires on automobile fuel efficiency, safety, and durability. Consumers currently have little, if any, convenient way of determining how tire choices can affect vehicle fuel economy.

The collective effects of the choices consumers make when they buy tires are matters of public interest. The 240 million passenger cars and light trucks in the United States consume about 135 billion gallons of motor fuel annually.[2] Finding ways to reduce this energy consumption is a national goal for reasons ranging from ensuring economic and national security to improving local air quality and reducing greenhouse gas emissions. Rolling resistance, or the force required to make the tires roll, differs from tire to tire and is a characteristic that indicates a tire's fuel efficiency. Consumers, if sufficiently informed and interested, could bring about a reduction in average rolling resistance of replacement tires by adjusting their tire purchases, and as a consequence, significantly reduce the amount of fuel consumed annually. While the handling, traction, and other operating characteristics of tires are of particular interest to tire buyers, they are also matters of even broader public interest in as much as they may influence the safety performance of vehicles on the nation's highways.

Congress required NHTSA to establish a tire fuel efficiency consumer information program, including a replacement tire fuel efficiency rating system. This requirement is evidently a response to a market failure in the form of imperfectly informed decisions on the part of consumers; the program attempts to respond to the market failure. In the same vein, EISA requires that NHTSA develop requirements for providing this information to consumers, and a national tire maintenance consumer education program. All tires require proper inflation and maintenance to achieve their intended levels of efficiency, safety, wear, and operating performance. NHTSA has previously addressed the importance of proper tire inflation to safety and fuel efficiency in various public service campaigns. NHTSA has also mandated that tire pressure monitoring systems (TPMSs) be installed on new motor vehicles,[3] but TPMS is not a substitute for proper tire maintenance. Motorists must be alerted to the fact that even small losses in inflation pressure can reduce tire treadwear life, fuel efficiency, and operating performance.[4]

This document proposes to require tire manufacturers to label their replacement tires for fuel efficiency, safety, and durability based on test procedures specified by the agency. These tests address three aspects of tire performance: rolling resistance, traction and treadwear life. As noted above and described in further detail below, rolling resistance is a measurement of fuel efficiency. A measurement of traction is intended to indicate a tire's ability to stop on wet pavement. Thus, traction is one metric that corresponds to safety. A treadwear rating measures a tire's wear rate compared with that of control tires. Treadwear life, therefore, corresponds to a measure of durability.

Comparing this new proposed label across potential replacement tires would enable consumers to see how different replacement tires can affect the fuel economy they are getting from their vehicle. The label would also allow consumers to see the tradeoff they may be facing between fuel efficiency, safety (*i.e.,* traction), and durability (*i.e.,* treadwear life), and how the balance of these factors may differ from tire to tire. NHTSA's research has found that while tire construction need not sacrifice traction or treadwear for improved fuel efficiency, maintaining the same traction and treadwear while increasing the fuel efficiency of a given tire often entails higher costs.[5] Thus, if a manufacturer seeks to improve the fuel efficiency of a given replacement tire construction while keeping cost constant, there is a substantial chance that the construction will sacrifice either traction or treadwear.

The agency is proposing to require that tire retailers display a tire fuel efficiency consumer information program poster that NHTSA will print and provide to retailers. The poster would communicate the importance of comparing replacement tire ratings as well as the importance of proper tire maintenance. The agency is also proposing to require tire retailers and tire manufacturers that maintain Web sites to link to NHTSA's comprehensive tire Web site it will be developing as part of a national tire maintenance consumer education program. The agency seeks comments on any other information dissemination requirements that would ensure that easy-to-understand information is conveyed in a way that is most likely to impact consumers' decisions and, thus, affect their behavior and save them and our nation fuel and money.

In developing the proposal, the agency conducted tire testing research to determine which test procedure would best standardize a fuel efficiency rating and provide accurate discrimination among replacement tires. The agency is proposing the specific test procedure by which manufacturers are to measure rolling resistance for the rating system. NHTSA also conducted consumer focus group research to improve understanding of the typical tire purchaser and the tire purchasing

[1] Public Law 110–140, 121 Stat. 1492 (Dec. 18, 2007).

[2] Transportation Energy Data Book, Edition 27, Tables 4–1 and 4–2, available at *http://cta.ornl.gov/data/index.shtml* (last accessed Mar. 5, 2009).

[3] *See* 70 FR 18136 (April 8, 2005).

[4] Transportation Research Board Special Report 286, Tires and Passenger Vehicle Fuel Economy, National Research Council of the National Academies, 5 (2006) (hereinafter ''2006 NAS Report'').

[5] *See* National Highway Traffic Safety Administration, NHTSA Tire Rolling Resistance Rating System Test Development Project: Phase 2—Effects of Tire Rolling Resistance Levels on Traction, Treadwear, and Vehicle Fuel Economy (February 2009). This Phase 2 research report will be placed in the docket.

process for the average consumer. NHTSA's preliminary consumer research explored the type of label (including forms of rating, scales, and graphic) that best communicates the information to consumers. In this notice, we are proposing a label based on the rating scale and presentation that tested best with consumers and that promises to improve the operation of the market in terms of three factors (fuel economy, safety, and durability) that matter to consumers. We are aware that by itself, the rating scale may not make the relevant information fully meaningful to consumers; from the label alone, it is not entirely clear what a high rating, rather than a low one, will mean in terms of what matters to consumer choices. The agency is planning to do additional consumer testing, including additional types of testing such as quantitative and experimental techniques, to make the label as meaningful as possible. At this point, the agency cannot project the expected consumer reaction to this program, and it will engage in continued testing to provide such projections. The agency requests comment on the proposed rating systems, the proposed label, and potential future consumer research.

NHTSA is also publishing a companion Preliminary Regulatory Impact Analysis (PRIA) that provides an analysis on the potential economic impacts of this consumer information program. The agency seeks comment on this preliminary analysis.

B. Energy Independence and Security Act of 2007

The provision of EISA that mandates the consumer tire information program built on a legislative proposal originally introduced in 2006 after a NAS report was issued suggesting that a tire fuel efficiency consumer information program could increase vehicle fuel economy by an average of 1 to 2 percent.[6] Many factors affect a vehicle's fuel economy, including the tire's rolling resistance, or force required to make the tires roll. The 2006 NAS report estimated that 4 percent (urban) to 7 percent (highway) of the energy available from the vehicle's fuel usage is used to overcome the rolling resistance of the tires. Therefore, reducing rolling resistance can reduce a vehicle's fuel consumption. As one of many strategies to meet the Federal corporate average fuel economy (CAFE) standards for new passenger cars and light trucks, automobile manufacturers often equip vehicles with low rolling resistance tires. However, consumers often unknowingly purchase higher rolling resistance tires when replacing their vehicle tires, because information on the comparative rolling resistance of tires and its impact on vehicle fuel economy is not readily available.

One of the most significant of the EISA mandates is the setting of separate maximum feasible standards for passenger cars and for light trucks at levels sufficient to ensure that the average fuel economy of the combined fleet of all passenger cars and light trucks sold by all manufacturers in the U.S. in model year (MY) 2020 equals or exceeds 35 miles per gallon. In the near future, per the President's announcement, NHTSA and the Environmental Protection Agency (EPA) intend to initiate a joint rulemaking with NHTSA proposing CAFE standards under the Energy Policy and Conservation Act (EPCA), as amended by EISA, and EPA proposing greenhouse gas emissions standards under the Clean Air Act.[7] It is intended that this joint rulemaking proposal will reflect a carefully coordinated and harmonized approach to implementing these two statutes.[8] The new standards will propose a significant increase in fuel economy by 2016.[9] This consumer tire information program is one of the actions that will contribute towards the larger goals of energy independence and security.

Section 111 of EISA added section 32304A to Chapter 323 of title 49, United States Code. This chapter codifies consumer information requirements initially established by the Motor Vehicle Information and Cost Savings Act of 1972 (Pub. L. 92–513). The new section 32304A is entitled ''Consumer tire information'' and specifies as follows:

- Within 24 months of the enactment of EISA, NHTSA is to promulgate rules establishing a national tire fuel efficiency consumer information program for replacement tires to educate consumers about the effect of tires on fuel efficiency, safety, and durability.
- The program must include a national tire fuel efficiency rating system for replacement tires to assist consumers in making more educated tire purchasing decisions.
- NHTSA must specify requirements for providing information to consumers, including information at the point of sale and other potential dissemination methods, including the Internet.
- NHTSA must also specify the test methods that manufacturers are to use in assessing and rating tires to avoid variation among test equipment and manufacturers.
- As a part of the consumer information program, NHTSA must develop a national tire maintenance consumer education program, which must include information on tire inflation pressure, alignment, rotation, and treadwear to maximize fuel efficiency, safety and durability of replacement tires.

C. Proposal

We solicit comment on all aspects of this proposal, including the rolling resistance test procedure, the rating system and label graphic, and the requirements for tire manufacturers and tire retailers for reporting and disseminating information. Specific areas where we request comments are identified elsewhere in this preamble and in the PRIA. Based on public comments and other information, including new data and analysis, the requirements and specifications in the final rule could differ from the specific ones proposed in this document.

1. Test Procedures

This document proposes to require tire manufacturers to rate the fuel efficiency of their tires using a test procedure currently under development by the International Organization for Standardization (ISO), ISO 28580: *Tyre Rolling Resistance measurement method—Single point test and measurement result correlation—Designed to facilitate international cooperation and, possibly, regulation building.* The ISO standard is currently in Final Draft International Standard (FDIS) stage, and is expected to be balloted and finalized by October 2009. Based on this timeline, the agency expects this test procedure to be finalized before publication of the final rule.[10] NHTSA is proposing to specify the use of the finalized ISO 28580 test procedure. The agency is also seeking

[6] Previous attempts to establish a national tire fuel efficiency program can be found in proposed amendments to various energy bills in prior years. *See e.g.,* S. Amdt. 3083, 108th Cong., 150 Cong. Rec. S4710 (2004) (proposing to amend S. 150); S. Amdt. 1470, 108th Cong., 149 Cong. Rep. S10707 (2003) (proposing to amend S. 14). These amendments proposed regulating the fuel efficiency of tires in addition to a tire fuel efficiency grading system and consumer information program, and were not adopted.

[7] Notice of Upcoming Joint Rulemaking To Establish Vehicle GHG Emissions and CAFE Standards; Notice of Intent To Conduct a Joint Rulemaking, 74 FR 24007 (May 22, 2009).

[8] *Id.* at 24008.

[9] *Id.* at 24009.

[10] If the ISO 28580 test procedure is not a finalized by the time of publication of this notice, interested parties may obtain a copy of the draft by contacting Mr. Joe Pacuit, U.S. Technical Advisory Group (TAG) Secretariat to Technical Committee (TC) 31, *Tyres, rims and valves.* Mr. Pacuit can be reached by telephone at (303) 666–8121.

comment on the use of other test procedures as described in section IV of this notice.

The choice of which test procedure to specify for measuring rolling resistance is important because measuring rolling resistance requires precise instrumentation, calibration, speed control and equipment alignment for repeatable results. As explained in more detail in this notice, agency research shows that all of the available test procedures could meet these requirements. However, the ISO 28580 test method is unique in that it specifies a procedure to correlate results between laboratories and test equipment, which our research shows is a significant source of variation. Because other established test methods lack such a procedure, NHTSA would have to develop a new procedure to address this variation before any of those test methods could be considered. Further, the ISO 28580 test procedure is the specified test method in the proposed European Union Directive, allowing manufacturers to do one test to determine ratings for both proposed regulations.

As for the safety and durability ratings, due to the statutory timeline within which this rulemaking must be completed, NHTSA is proposing to use traction and treadwear test procedures that are already specified under another tire rating system, the uniform tire quality grading standards (UTQGS).[11] The agency has been examining other metrics for safety and durability, as well as possible correlations between tire fuel efficiency and wet and dry traction, indoor and outdoor treadwear, and vehicle fuel economy.[12]

2. Proposed Rolling Resistance Rating Metric

We are proposing to base a tire's fuel efficiency rating on rolling resistance force (RRF) as measured by the ISO 28580 test procedure. This is in contrast to basing a fuel efficiency rating on rolling resistance coefficient (RRC), or RRF divided by load. The agency is aware that the proposed European tire fuel efficiency rating system specifies tire ratings based on RRC.

NHTSA is proposing to base the rolling resistance rating on the RRF metric because such a rating would provide more discrimination among different tires throughout the system, and thus more information to consumers, than a rating based on RRC. RRF translates more directly to the fuel required to move a tire, and based on the goals of EISA, appears to be a more appropriate metric.

3. Proposed Label

To convey information to consumers, this document proposes a label, which contains an individual tire's ratings for fuel efficiency (*i.e.,* rolling resistance), safety (*i.e.,* traction), and durability (*i.e.,* treadwear), and which is similar to a ratings label that tested well in consumer research conducted by NHTSA. NHTSA conducted focus group studies in which it presented several labels using different graphics and scales to relay the ratings. Figure 1 shows the ratings label that NHTSA is proposing in today's notice. The graphic shows all the ratings on a scale of 0 to 100, with 100 being the best rating. Consumers expressed an understanding of this 0 to 100 scale, and reacted positively to the red and green shading, with red indicating lower/worse ratings and green indicating higher/better ratings.[13] Other graphics presented in NHTSA's consumer research are discussed in section VI.B.3 of this notice.

NHTSA is seeking comment on an alternative graphic for the traction rating scale because consumers expressed some confusion with the graphic as presented. The cloud in the symbol for traction (representing the source of the rain drops) was confusing for some consumers who could not make out what it was or thought it was a cowboy hat. NHTSA is aware that the consumers may not fully understand the meaning of certain points on the ratings scale and is taking steps, with this rule, to help to increase understanding. NHTSA is seeking comment on how that task might best be accomplished, including with changes to the label itself.

For the purposes of the final rule, the agency is also considering the concept of a combined rating of some sort, which would convert all three benefit metrics into one overall rating. The advantage of such a system for tire performance ratings would be that it would simplify the ratings, potentially relieving consumers of the task of weighing the ratings for three different metrics for one tire against the three ratings for another tire. At the same time, if the single combined rating were presented to the exclusion of individual ratings for each metric, it would obscure the relative performance of individual components that might carry different priorities with different consumers. As discussed in detail below in section VI.A.4, an example of such a system might be expressed as average overall cost per mile. As explained in greater detail later in this notice, the agency seeks comments as to whether such a combined rating could be developed and, if so, should be adopted in the final rule and implemented. The agency seeks comments on the relative advantages and disadvantages of a single combined rating, the three rating system in our proposal, and a third approach combining the first two approaches.

[11] *See* 49 CFR 575.104 (2008).

[12] NHTSA's Phase 2 research tested 15 models of replacement tires, as well as the original equipment tires on a fuel economy test vehicle, to examine possible correlations between tire rolling resistance levels and vehicle fuel economy as measured on a dynometer, wet and dry traction, and indoor and outdoor treadwear. *See* National Highway Traffic Safety Administration, NHTSA Tire Rolling Resistance Rating System Test Development Project: Phase 2—Effects of Tire Rolling Resistance Levels on Traction, Treadwear, and Vehicle Fuel Economy (February 2009). This Phase 2 research report will be placed in the docket.

[13] Today's proposed regulation specifies the colors on the far ends of the ratings scales as ''primary red'' (for lowest/worst rating box) and ''primary green'' (for the highest/best rating box). An example of the proposed label in color can be found in the docket for this rulemaking and on NHTSA's Web site, *http://www.nhtsa.gov*. Click on the link to this notice, which will appear under ''What's New, Latest Updates, and Features on Our Site'' (towards the bottom of the main page).

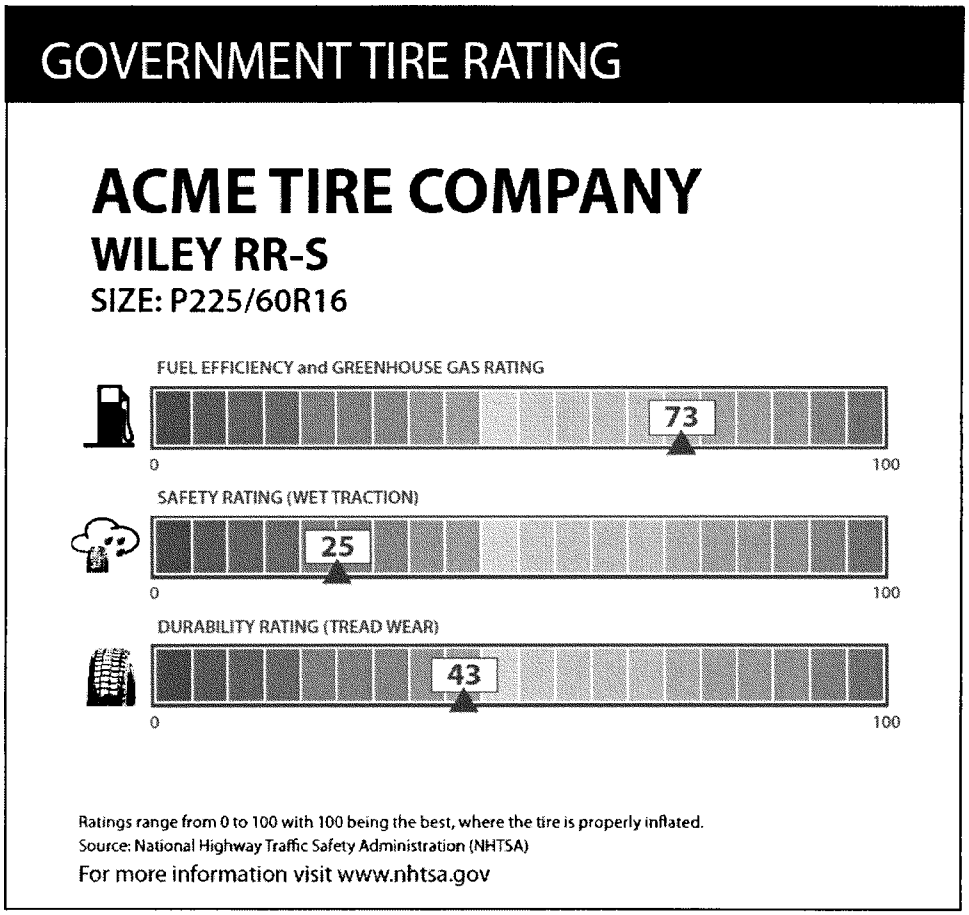

Figure 1. Proposed Rating System Label

4. Proposed Information Dissemination and Reporting Requirements for Tire Manufacturers and Tire Retailers

For tire manufacturers, NHTSA is proposing that manufacturers be required to report various data to the agency. This is necessary both for enforcement of the rating system, and for development of NHTSA's tire fuel efficiency Web site, which will contain a database of tire information with a calculator tool that allows easy comparison of fuel savings between various replacement tires.

Regarding labeling, we are proposing to require tire manufacturers to print the tire fuel efficiency graphic (Figure 1) in color along with any other information manufacturers include on an existing paper label on the tire.[14] At the manufacturer's option they could also meet the labeling requirement by displaying the tire fuel efficiency rating graphic as a separate label in full color.

As for requirements for tire retailers, we are proposing a requirement that the paper label containing the new rating information must remain on the tire until the sale of the tire. The label refers consumers to the agency's Web site for further information about the ratings. We are further proposing a requirement that tire retailers must display a poster that NHTSA would print and distribute to them which would explain the rating system and encourage consumers to compare ratings across tires.

In addition, for tire manufacturers and retailers that maintain a Web site, the agency is proposing to require those Web sites to link to NHTSA's comprehensive tire Web site we will be developing as part of the national tire maintenance consumer education program. The agency also seeks comments on any other information dissemination requirements that would ensure that easy-to-understand information is conveyed in a way that is most likely to impact consumers' decisions and, thus, affect their behavior and save them and our nation fuel and money.

5. Consumer Education Program

This document identifies and seeks comment on various ways that NHTSA plans to implement a consumer education program to inform consumers about the effect of tire properties and tire maintenance on vehicle fuel efficiency, safety, and durability. All tires require proper inflation and maintenance to achieve their intended levels of energy efficiency, safety, wear, and operating performance. NHTSA has previously addressed the importance of proper tire inflation to fuel efficiency, treadwear, and safety in various public service campaigns. Although NHTSA has mandated tire pressure monitoring systems (TPMSs) be installed on new motor vehicles,[15] a TPMS is not a substitute for proper tire maintenance. Motorists must be alerted to the fact that even small losses in inflation pressure

[14] Manufacturers are required to print UTQGS information on a paper label pursuant to 49 CFR 575.104(d)(1)(B). Many manufacturers include other information on this paper label as well. Note that NHTSA uses the term "paper label" in the colloquial sense; many labels on tires are actually made of plastic.

[15] *See* 70 FR 18136 (April 5, 2005); Docket No. NHTSA–2005–20586–1.

can reduce tire treadwear life, fuel efficiency, and operating performance.[16]

Some of NHTSA's ideas for consumer education include informational posters or brochures that NHTSA would distribute at trade shows and other events, and which tire retailers could display at the point of sale and a centralized, expansive government Web site on tires containing a database of all tire rating information. NHTSA is also planning to develop a comparative calculator that would show the amount of money a consumer would save annually or over the estimated lifetime of the tires of varying fuel efficiency ratings. Using the calculator, a consumer could select tires to compare, enter the fuel economy of their vehicle (miles per gallon or mpg) and the average number of miles they drive each year and even the dollar amount they are paying for fuel and get a calculation of differences in fuel usage and/or money saved for the tires under comparison.

Finally, NHTSA plans to develop and form new partnerships to distribute educational messages about tire fuel efficiency and tire maintenance. NHTSA will seek to partner with any interested tire retailers, State or local governments, as well as manufacturers who share NHTSA's goal of promoting the importance of proper tire maintenance. NHTSA will also seek to partner with universities and high schools that may wish to educate students regarding tire fuel efficiency or proper tire maintenance. These various innovative tools and education measures will assist consumers in making better-informed tire purchasing and maintenance decisions.

D. Costs and Benefits

The annual cost of NHTSA's proposal is estimated to be between $18.9 and $52.8 million. This includes testing costs of $22,500, reporting costs of around $113,000, labeling costs of around $9 million, costs to the Federal government of $1.28 million, and costs of between $8.4 and $42 million to improve tires. In addition, NHTSA anticipates one-time costs of around $4 million, including initial testing costs of $3.7 million and reporting start-up costs of $280,000.

It is hoped that the proposed rule will have benefits in terms of fuel economy, safety, and durability. At the very least, the proposed rule should enable consumers to make more informed decisions about these variables, thus increasing benefits along dimensions that most matter to them. It is possible that the rule will help promote innovation that will benefit consumers along all three dimensions. Because the agency cannot foresee precisely how much today's proposed consumer information program would affect consumer tire purchasing behavior and cannot foresee the reduction in rolling resistance among improved tires, the PRIA estimates benefits using a range of hypothetical assumptions regarding the extent to which the tire fuel efficiency consumer information program affects the replacement tire market. Specifically, the PRIA develops estimates assuming that between 2% and 10% of targeted tires are improved and that the average reduction in rolling resistance among improved tires is between 5% and 10%. Under these hypothetical assumptions, the proposal is estimated to save 7.9–78 million gallons of fuel and prevent the emission of 76,000–757,000 metric tons of CO_2 annually. The values of the fuel savings are between $22 and $220 million at a 3 percent discount rate and between $20 and $203 million at a 7 percent discount rate.

E. Lead Time

Recognizing that the deadlines imposed by EISA indicate a desire to have information available to consumers as quickly as possible, NHTSA is proposing to require tire manufacturers to meet applicable requirements for all existing replacement tires within 12 months of the issuance of a final regulation. That is, within 12 months of the issuance of a final regulation tire manufacturers must submit required data to NHTSA on all existing replacement tires, and all replacement tires sold by the manufacturer or transferred to tire retailers must be labeled. For new tires introduced after the effective date of this rule, NHTSA is proposing to require reporting of information at least 30 days prior to introducing the tire for sale, as is currently required for UTQGS information.

Regarding the poster NHTSA is proposing to require in retailers that have a display room, the agency is proposing to make this poster available within 12 months of the issuance of a final regulation. At that time NHTSA will publish a **Federal Register** notice announcing the availability of the poster. The agency is proposing that a tire retailer must have the poster on display within 60 days of the issuance of the notice of availability in the **Federal Register**. We are proposing that a tire retailer will be able to comply with the requirement of displaying the poster either by downloading and printing it, in color and with the specifications from NHTSA's Web site, or by contacting the agency and requesting that we send the retailer a copy of the poster.

For tire retailers and tire manufacturers with an Internet presence, NHTSA is proposing that those Web sites link to NHTSA's tire Web site within 12 months of the issuance of a final regulation. NHTSA will provide the direct link to the comprehensive tire Web site in that final regulation.

II. Background

A. Contribution of Tire Maintenance and Tire Fuel Efficiency to Addressing Energy Independence and Security

1. Tire Fuel Efficiency and Rolling Resistance

Without the continual addition of energy, a vehicle will slow down. This effect is due to many forces, including aerodynamic drag, driveline losses, brake drag, and tire rolling resistance. The first three of these are vehicle properties; they will not be discussed further. Rolling resistance is the effort required to keep a given tire rolling. That is, rolling resistance is the energy loss during the continuation of rotational movement of the tire. As such, it always opposes the vehicle's longitudinal, or forward/backward, movement. Since this rolling resistance force (RRF) opposes the direction of travel of the rotating tire, it directly reduces the efficiency of a vehicle in converting the chemical energy in the fuel to motion of the vehicle. Therefore, tire rolling resistance is the most effective metric for rating the ''fuel efficiency'' of a tire.

In general, vehicle efficiency affects the conversion of chemical energy in motor fuel into mechanical energy and the transmission of energy to the axles to drive the wheels. Figure 2 illustrates the energy uses and losses for a midsize passenger car. Part of the energy supplied to the wheels of the vehicle is lost due to energy converted to heat within the structure of the tire as well as friction between the tire and the road,

[16] When a tire is under-inflated, the shape of its footprint and the pressure it exerts on the road surface are both altered. One consequence of this alteration can be a reduction in the tire's ability to transmit (or generate) braking force to the road surface. Thus, under-inflated tires may increase a vehicle's stopping distance on wet surfaces. 66 FR 38982, 38986 (July 26, 2001). Under-inflated tires also increase the rolling resistance of vehicles and, correspondingly, decrease their fuel economy. *Id.*

which creates resistance, decreasing fuel efficiency.

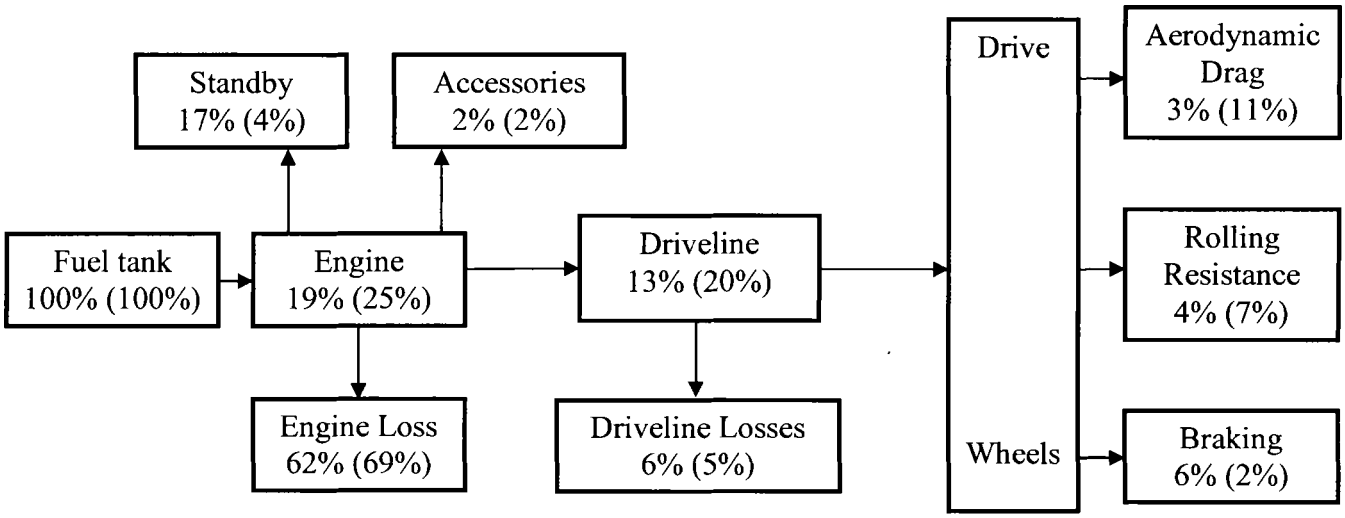

Figure 2. Uses and Losses of Fuel Energy in a Vehicle – Estimates of City and Highway Usage (Highway Figures Appear in Parentheses)[17]

A tire's rolling resistance is the energy consumed by a rolling tire, or the mechanical energy converted into heat by a tire, moving a unit distance on the roadway.[18] The magnitude of rolling resistance depends on the tire used, the nature of the surface on which it rolls, and the operating conditions—inflation pressure, load, and speed.[19]

2. Relationship Between Tire Maintenance and Tire Fuel Efficiency and Vehicle Fuel Economy

Tires with reduced inflation pressure exhibit more sidewall bending and tread shearing. This increased deformation causes increased energy loss by the flexing of the rubber. Further, tires with less than optimal inflation pressure have a larger footprint of the tire on the road, creating more contact between the tire and the road, thereby increasing rolling resistance. Therefore, properly inflated tires achieve less rolling resistance and higher fuel efficiency than under-inflated tires. Moreover, all tires require proper inflation and proper maintenance to achieve their intended levels of efficiency, safety, wear, and operating performance. Thus, a strong message urging vigilant maintenance of inflation must be a central part of communicating information on the fuel efficiency performance of tires to motorists.[20]

In addition to proper tire inflation pressure, combinations of differences in tire dimensions, design, materials, and construction features will cause tires to differ in rolling resistance as well as in many other attributes such as traction, handling, noise, wear resistance, and appearance.[21] Thus, when choosing among replacement tires, consumers choose among tires varying in price, style, and many aspects of performance, including rolling resistance, treadwear life, and traction. Every year Americans spend approximately $20 billion replacing about 200 million passenger car tires.[22] Thus, the tires consumers purchase will not only affect the handling, traction, ride comfort, and appearance of their cars, but also the fuel economy.[23]

Fuel economy improvements are a large part of ensuring a secure energy future.[24] EISA will help reduce America's dependence on oil by reducing U.S. demand for oil by setting a national fuel economy standard of at least 35 miles per gallon by 2020—which will increase fuel economy standards by 40 percent and save billions of gallons of fuel. In the near future, per the President's announcement, NHTSA and EPA intend to initiate a joint rulemaking, with NHTSA proposing CAFE standards under EPCA, as amended by EISA, and EPA proposing greenhouse gas emissions standards under the Clean Air Act.[25] This notice proposes a tire fuel efficiency rating system and consumer education program that will contribute to increases in actual on-road fuel economy achieved, even for vehicles currently in service.

Further, improving fuel economy reduces the amount of tailpipe emissions of CO_2. CO_2 emissions are directly linked to fuel consumption because CO_2 is an ultimate end product of burning gasoline. The more fuel a vehicle burns, the more CO_2 it emits. Since the CO_2 emissions are essentially constant per gallon of fuel combusted, the amount of fuel consumption per mile is directly related to the amount of CO_2 emissions per mile. Thus, improvements in fuel economy necessarily reduce tailpipe emissions of CO_2.[26] The need to take action to reduce greenhouse gas emissions, *e.g.,* motor vehicle tailpipe emissions of CO_2, in order to forestall and even mitigate climate change is well recognized.[27]

[17] *See http://www.fueleconomy.gov/feg/atv.shtml*; 2006 NAS Report, *supra* note 4, at 29.

[18] Rolling resistance is, thus, defined as energy per unit distance, which is the same units as force (Joules/meter = Newtons). However, unlike force, rolling resistance is a scalar quantity with no direction associated with it. National Highway Traffic Safety Administration, The Pneumatic Tire, DOT HS 810 561, at 477 (February 2006).

[19] *Id.*

[20] 2006 NAS Report, *supra* note 4, at 5, 97.

[21] *Id.* at 1.

[22] H.R. Rep. No. 109–537, at 3 (June 28, 2006); 2006 NAS Report, *supra* note 4, at 1.

[23] Most passenger tires are replaced every 3 to 5 years because of wear. *Id.*

[24] *See* 73 FR 24352, 24360 (May 2, 2008).

[25] Notice of Upcoming Joint Rulemaking To Establish Vehicle GHG Emissions and CAFE Standards; Notice of Intent to Conduct a Joint Rulemaking, 74 FR 24007 (May 22, 2009).

[26] *Id.* at 24356.

[27] IPCC (2007): *Climate Change 2007: Mitigation of Climate Change. Contribution of Working Group*

3. 2006 National Academy of Sciences Report

In the Consolidated Appropriations Act of 2004,[28] Congress provided funding through the USDOT/NHTSA to the National Academy of Sciences (NAS) to develop and perform a national tire fuel efficiency study and literature review.[29] The NAS was to assess the feasibility of reducing rolling resistance in replacement tires and the effects of doing so on vehicle fuel consumption, tire wear life and scrap tire generation, and tire operating performance as it relates to motor vehicle safety. Congress asked that the assessment include estimates of the effects of reductions in rolling resistance on consumer spending on fuel and tire replacement.

In April 2006, the Transportation Research Board and the Board on Energy and Environmental Systems, part of the National Academies' Division on Engineering and Physical Sciences, released Special Report 286, Tires and Passenger Vehicle Fuel Economy: Informing Consumers and Improving Performance (2006 NAS Report).[30] The 2006 NAS Report concluded that reduction of average rolling resistance of replacement tires by 10 percent was technically and economically feasible, and that such a reduction would increase the fuel economy of passenger vehicles by 1 to 2 percent, saving about 1 to 2 billion gallons of fuel per year nationwide.[31]

A reduction in the average rolling resistance of replacement tires in the vehicle fleet can occur through various means. Consumers could purchase more tires that are now available with lower rolling resistance, tire designs could be modified, and new tire technologies that offer reduced rolling resistance could be introduced. More vigilant maintenance of tire inflation pressure may further this outcome as well.[32] The 2006 NAS Report concluded that consumers, if sufficiently informed and interested, could bring about a reduction in average rolling resistance by adjusting their tire purchases and by taking proper care of their tires once in service, especially by maintaining recommended inflation pressure.[33]

The 2006 NAS Report observed that consumers currently have little, if any, practical way of assessing how tire choices can affect vehicle fuel economy. Recognizing this market failure, the Report recommended that Congress authorize and make sufficient resources available for NHTSA to prompt and work with the tire industry in gathering and reporting information on the influence of passenger tires on vehicle fuel consumption.[34] The 2006 NAS Report recognized the challenge of changing consumer preference and behavior, but recommended Congressional action nonetheless because of the potential societal benefits associated with increasing effective on-road fuel economy by even 1 to 2 percent.[35] This ambitious undertaking must begin with information concerning the tire's influence on fuel efficiency being made widely and readily available to tire buyers and sellers. The consumer tire information program mandated by EISA and proposed in today's notice begins this undertaking.

Other countries have also begun working towards increasing on-road fuel economy by reducing average rolling resistance. These countries include those of the European Union and Japan. In addition, the State of California has also initiated a program to increase vehicle fuel economy using tire efficiency ratings.

4. California

In 2001, California Senate Bill 1170 authorized the California Energy Commission (CEC) to conduct a study to investigate opportunities for increasing usage of low rolling resistance tires in California.[36] The study concluded that there was a potential for substantial vehicle fuel savings from an increase in the use of properly inflated, low rolling resistance tires. As a result of this study, in October 2003, the California State legislature adopted Assembly Bill No. 844 (AB 844),[37] which required the CEC to develop a comprehensive fuel efficient tire program.[38]

The program would consist of three phases. In the first phase, the CEC will develop a database with information on the fuel efficiency of replacement tires sold in California, develop a rating system for the energy efficiency of replacement tires, and develop a manufacturer reporting requirement for the energy efficiency of replacement tires.[39] In the second phase, the CEC will consider whether to adopt standards for replacement tires to ensure that replacement tires sold in the State are at least as energy efficient, on average, as original equipment tires.[40] In deciding whether to adopt standards, the CEC must ensure that a standard:

- Is technically feasible and cost effective;
- Does not adversely affect tire safety;
- Does not adversely affect the average life of replacement tires; and
- Does not adversely affect the State effort to manage scrap tires.[41]

If standards are adopted, the CEC will also develop consumer information requirements for replacement tires for which standards apply. In the third phase, the CEC must review and revise the program at least every three years.[42]

On June 10, 2009, the Transportation Policy Committee of the CEC conducted a workshop regarding the Energy Commission Fuel Efficient Tire Program. As part of that workshop, the CEC staff draft regulation was made public.[43] The draft regulation specifies testing and reporting requirements for manufacturers, and describes the database the CEC will maintain. The draft regulation defines a ''fuel efficient tire'' as a tire with ''a declared fuel efficiency rating value no higher than 1.15 times the lowest declared fuel efficiency rating value for all tires in its

III to the Fourth Assessment Report of the Intergovernmental Panel on Climate Change [B. Metz, O. Davidson, P. Bosch, R. Dave, and L. Meyer (eds.)]. Cambridge University Press, Cambridge, United Kingdom and New York, NY, USA.

[28] H.R. Rep. No. 108–401, at 971 (Nov. 25, 2003) (Conf. Rep.).

[29] Ultimately the task was given to the Committee for the National Tire Efficiency Study of the Transportation Research Board, a division of the National Research Council that is jointly administered by the National Academy of Sciences, the National Academy of Engineering, and the Institute of Medicine.

[30] Transportation Research Board Special Report 286, Tires and Passenger Vehicle Fuel Economy, National Research Council of the National Academies (2006). A copy of this report will be placed in the docket.

[31] *Id.* at 2–3.

[32] *Id.* at 3.

[33] *Id.*

[34] *Id.* at 2, 4.

[35] *Id.*

[36] *See* Cal. Pub. Res. Code §§ 25000.5, 25722–25723 (2009); 2001 Cal. Legis. Serv. Ch. 912 (S.B. 1170) (West).

[37] *See* Cal. Pub Res. Code §§ 25770–25773; 2003 Cal. Legis. Serv. Ch. 645 (A.B. 844) (West).

[38] Specifically, AB 844 required the State Energy Resources Conservation Board ''to adopt, on or before July 1, 2007, and implement, no later than July 1, 2008, a replacement tire fuel efficiency program of statewide applicability for replacement tires for passenger cars and light-duty trucks, that is designed to ensure that replacement tires sold in the State are at least as energy efficient, on average, as the tires sold in the State as original equipment on those vehicles.'' Cal. Pub. Res. Code § 25772.

[39] *See id.* at § 25771.

[40] *See id.* at § 25772. EISA does not provide NHTSA with the authority to directly regulate the fuel efficiency of tires. EISA's mandates to NHTSA regarding replacement tire fuel efficiency relate only to developing ratings and disseminating information to consumers.

[41] *See id.* at § 25773.

[42] *Id.*

[43] *See http://www.energy.ca.gov/transportation/tire_efficiency/documents/index.html#061009* (last accessed June 15, 2009).

combined tire size designation and load index.'' [44]

5. European Union

Europe is approaching the issue of tire fuel efficiency from two directions. On March 10, 2009, the European Parliament and the Council of the European Union adopted the European Commission Proposal for a regulation concerning new type-approval requirements for the general safety of motor vehicles.[45] One of the new requirements in this regulation will gradually prohibit original equipment and replacement tires with a rolling resistance coefficient (RRC) above certain levels beginning November 1, 2012.

On April 22, 2009, the European Parliament adopted another Commission proposal, ''Fuel Efficiency: Labeling of Tyres.'' The new regulation will require original equipment and replacement tires to be rated for rolling resistance, wet grip and noise.[46] The rolling resistance rating is determined using the same test procedure as in ISO 28580: *Tyre Rolling Resistance measurement method—Single point test and measurement result correlation—Designed to facilitate international cooperation and, possibly, regulation building.* The ratings must be provided to consumers in a label on the tire, and also in technical promotional literature, while the measured value for RRC as determined for the type-approval regulation must be molded onto the tire sidewall.

The label design is the same A to G scale as that used to rate the energy efficiency of household appliances in Europe.[47] It will apply to tires fitted to passenger cars as well as light and heavy duty vehicles. Tire manufacturers are required to have a ''fuel savings calculator'' on their Web sites, while the European Commission is required to establish a ''EU tyre labeling Web site'' by September 2010. The new regulation will go into effect in 2012, but tire manufacturers are encouraged to comply earlier.

6. Japan

In late 2008 the Ministry of Economy, Trade and Industry (METI) and the Ministry of Land, Infrastructure, Transport and Tourism (MLIT) announced a decision to establish a fuel efficient tire program.[48] The stated objectives are to include standards for measuring rolling resistance, providing information to consumers, and consideration of ways to ensure proper tire pressure management (either through tire pressure monitoring systems or consumer education). Japan has been participating in the development of ISO 28580.

B. Energy Independence and Security Act of 2007 Mandated Consumer Tire Information Program

The legislation that eventually became section 111 of EISA mandating the tire fuel efficiency consumer education program was originally introduced by itself in the U.S. House of Representatives as H.R. 5632 [49] following the recommendations in the 2006 NAS Report.[50] The bill was introduced on June 16, 2006, and on June 28, 2006, the House Committee on Energy and Commerce reported on a slightly amended version of the bill.[51] It was never acted upon by the 109th Congress, but it was inserted into a comprehensive energy bill as the 110th Congress began to develop it in May 2007.

The Motor Vehicle Information and Cost Savings Act, which was enacted in 1972, mandated a Federal program to provide consumers with accurate information about the comparative safety and damageability of passenger cars. These requirements were codified in Chapter 323 of title 49 of the United States Code (U.S.C.). EISA added section 32304A to title 49 U.S.C., Chapter 323, which gives authority to the Department of Transportation (DOT) to establish a new consumer tire information program to educate consumers about the effect of tires on automobile fuel efficiency, safety, and durability. The DOT has delegated authority to NHTSA at 49 CFR 1.50.

We have summarized below the requirements of title 49 U.S.C. 32304A, the consumer tire information program provision enacted by EISA. We request comment on how effectively our proposal is likely to be in achieving the goals of EISA. For example, what methodologies and assumptions should be used in establishing and implementing the new rating system? What is the most effective way to engage and educate consumers regarding the proposed rating system?

1. Tires Subject to the Consumer Information Program

The national tire fuel efficiency consumer information program mandated by EISA and proposed in this notice is applicable ''only to replacement tires covered under section 575.104(c) of title 49, Code of Federal Regulations'' (CFR), as that regulation existed on the date of EISA's enactment.[52] Section 575.104 of title 49 CFR is the Federal regulation that requires motor vehicle and tire manufacturers and tire brand name owners to provide information indicating the relative performance of passenger car tires in the areas of treadwear, traction, and temperature resistance. This section of NHTSA's regulations specifies the test procedures to determine uniform tire quality grading standards (UTQGS), and mandates that these standards be molded onto tire sidewalls.

Title 49 CFR, section 575.104 applies only to ''new pneumatic tires for use on passenger cars * * * [but] * * * does not apply to deep tread, winter-type snow tires, space-saver or temporary use spare tires, tires with nominal rim diameters of 12 inches or less, or to limited production tires as defined in [49 CFR 575.104(c)(2)].'' [53] Accordingly, today's proposed tire fuel efficiency consumer information program applies only to replacement passenger car tires with the same exclusions as the UTQGS regulation.

2. Mandate To Create a National Tire Fuel Efficiency Rating System

EISA requires NHTSA to ''promulgate rules establishing a national tire fuel efficiency consumer information program for replacement tires designed for use on motor vehicles to educate consumers about the effect of tires on automobile fuel efficiency, safety, and

[44] Publication #CEC–600–2009–010–SD (posted May 29, 2009), available at *http://www.energy.ca.gov/2009publications/CEC-600-2009-010/CEC-600-2009-010-SD.PDF* (last accessed June 15, 2009).

[45] *See http://www.europarl.europa.eu/sides/getDoc.do?pubRef=-//EP//TEXT+TA+P6-TA-2009-0092+0+DOC+XML+V0//EN&language=EN#top* (last accessed Mar. 11, 2009).

[46] *See http://www.europarl.europa.eu/oeil/FindByProcnum.do?lang=2&procnum=COD/2008/0221* (last accessed Mar. 4, 2009). Mandatory requirements are also proposed to begin in October 2010 for wet grip and external rolling noise.

[47] *See* Council Directive 1992/75/EEC, 1992 O.J. (L 297) 16–19 (on the indication by labeling and standard product information of the consumption of energy and other resources by household appliances).

[48] *See http://www.meti.go.jp/english/press/data/20081226_01.html* (last accessed Mar. 10, 2009).

[49] H.R. 5632, 109th Cong. (2d Sess. 2006).

[50] Previous attempts to establish a national tire fuel efficiency program can be found in proposed amendments to various energy bills in prior years. *See e.g.,* S. Amdt. 3083, 108th Cong., 150 Cong. Rec. S4710 (2004) (proposing to amend S. 150); S. Amdt. 1470, 108th Cong., 149 Cong. Rep. S10707 (2003) (proposing to amend S. 14). These amendments proposed regulating the fuel efficiency of tires in addition to a tire fuel efficiency grading system and consumer information program, and were not adopted.

[51] *See* H.R. Rep. No. 109–537 (2006).

[52] 49 U.S.C. 32304A(a)(3).

[53] 49 CFR 575.104(c)(1).

durability.'' [54] EISA specifies that the regulations establishing the program are to be promulgated not later than December 19, 2009.[55]

Section 111 of EISA specifically mandates ''a national tire fuel efficiency rating system for motor vehicle replacement tires to assist consumers in making more educated tire purchasing decisions.'' [56] However, NHTSA may ''not require permanent labeling of any kind on a tire for the purpose of tire fuel efficiency information.'' [57]

The only Committee Report commenting on the legislation that eventually became section 111 of EISA explained that need for this program was established by the 2006 NAS Report, which concluded that if consumers were sufficiently informed and interested, they could bring about a reduction in average rolling resistance (and thus an increase in average on-road fuel economy) by adjusting their tire purchases and by taking proper care of their tires once in service.[58] Thus, NHTSA reviewed conclusions and recommendations in the 2006 NAS Report regarding how best to inform consumers using a tire fuel efficiency rating system.

Specifically, the 2006 NAS Report concluded that rolling resistance measurement of new tires can be informative to consumers, especially if they are accompanied by reliable information on other tire characteristics such as treadwear rate and traction.[59] The 2006 NAS Report further stated that consumers benefit from the ready availability of easy-to-understand information on all major attributes of their purchases, and that tires are no exception. A tire's influence on vehicle fuel is an attribute that is likely to be of interest to many tire buyers.[60] NHTSA has attempted to keep these key observations in mind in the development of this proposal.

3. Communicating Information to Consumers

EISA specifies that this rulemaking to establish a national tire fuel efficiency consumer information program must include ''requirements for providing information to consumers, including information at the point of sale and other potential information dissemination methods, including the Internet.'' [61] While there is little to no legislative history of EISA itself, the legislation that eventually became section 111 of EISA was originally introduced in June 2006 with this identical requirement.[62]

On June 28, 2006, the House Committee on Energy and Commerce reported on a slightly amended version of the bill and noted that ''[t]he bill [ ] would require tire retailers to provide consumers with information on the tire fuel efficiency rating of motor vehicle tires at the point of sale.'' [63] Thus, NHTSA believes that the suggestion of point of sale requirements indicates that Congress intended NHTSA's authority to establish information dissemination requirements to be broad enough to include requirements for both tire manufacturers, which by statute includes importers,[64] and tire dealers/retailers and distributors.

4. Specification of Test Methods

Section 111 of EISA also mandates that this rulemaking to establish a national tire fuel efficiency consumer information program include ''specifications for test methods for manufacturers to use in assessing and rating tires to avoid variation among test equipment and manufacturers.'' [65] *See* section IV of this notice for a discussion of NHTSA's research and rationale regarding today's proposal of ISO 28580.

We note that the 2006 NAS Report, the recommendations from which formed the basis for the legislation that became section 111 of EISA, indicated that ''[a]dvice on specific procedures for measuring and rating the influence of individual passenger tires on fuel economy and methods of conveying this information to consumers [was] outside the scope of this study.'' [66] Accordingly, after publication of the 2006 NAS Report and in anticipation of Congressional legislation based off its recommendations, NHTSA embarked on a large-scale research project in July 2006 to evaluate existing tire rolling resistance test methods.[67]

5. Creating a National Consumer Education Program on Tire Maintenance

Section 111 of EISA further directs NHTSA to establish in this rulemaking ''a national tire maintenance consumer education program including, information on tire inflation pressure, alignment, rotation, and treadwear to maximize fuel efficiency, safety, and durability.'' [68] NHTSA already has some information regarding tire maintenance on its *http://safercar.gov* Web site.[69]

The 2006 NAS Report, the recommendations from which formed the basis for the legislation that became section 111 of EISA, noted that consumers benefit from the ready availability of easy-to-understand information on all major attributes of their purchases, and that replacement tires' influence on vehicle fuel economy is an attribute that is likely to be of interest to many tire buyers.[70] NHTSA has focused on these principles in developing today's proposal and seeks comment on the best way to make the information in this program both of interest to consumers and easy to understand. The 2006 NAS Report further noted that ''industry cooperation is essential in gathering and conveying tire performance information that consumers can use in making tire purchases.'' [71] NHTSA agrees that cooperation with the tire manufacturer and tire retailer industries, as well as other interested parties will be vital to the success of this program. The agency has held initial consultations with various groups of industry and the environmental community, as well at

[54] 49 U.S.C. 32304A(a)(1).

[55] EISA was signed into law on December 19, 2007. EISA specifies that ''[n]ot later than 24 months after the date of enactment * * * [NHTSA] shall, after notice and opportunity for comment, promulgate rules establishing a national tire fuel efficiency consumer information program for replacement tires designed for use on motor vehicles to educate consumers about the effect of tires on automobile fuel efficiency, safety, and durability.'' 49 U.S.C. 32304A(a)(1).

[56] 49 U.S.C. 32304A(a)(2)(A).

[57] *Id.* at § 32304A(d).

[58] H.R. Rep. No. 109–537, at 3 (2006).

[59] 2006 NAS Report, *supra* note 4, at 4. The 2006 NAS Report specifically noted that ''[i]deally, consumers would have access to information that reflects a tire's effect on fuel economy averaged over its anticipated lifetime of use, as opposed to a measurement taken during a single point in the tire's lifetime, usually when it is new.'' *Id.* However, ''[n]o standard measure of lifetime tire energy consumption is currently available, and the development of one deserves consideration. Until such a practical measure is developed, rolling resistance measurements of new tires can be informative to consumers * * *'' *Id.*

[60] 2006 NAS Report, *supra* note 4, at 4.

[61] 49 U.S.C. 32304A(a)(2)(B).

[62] *See* H.R. 5632, 109th Cong. (2d Sess. 2006).

[63] *See* H.R. Rep. No. 109–537, at 5 (2006).

[64] *See* 49 U.S.C. 32101(5) (defining manufacturer as ''a person (A) manufacturing or assembling passenger motor vehicles or passenger motor vehicle equipment; or (B) importing motor vehicles or motor vehicle equipment for resale.''). For purposes of the statute, the importer of any tire is a manufacturer. An importer is responsible for every tire it imports and is subject to civil penalties in the event of any violations. The U.S. Customs and Border Protection may deny entry at the port to items that do not conform to applicable requirements.

[65] 49 U.S.C. 32304A(a)(2)(C).

[66] 2006 NAS Report, *supra* note 4, at 4.

[67] *See* NHTSA Tire Rolling Resistance Rating System Test Development Project: Phase 1—Evaluation of Laboratory Test Protocols (October 2008). The research reports from this Phase 1 research will be placed in the docket.

[68] 49 U.S.C. 32304A(a)(2)(D).

[69] *See generally http://www.safercar.gov/portal/site/safercar/menuitem.13dd5c887c7e1358fefe0a2f35a67789/?vgnextoid=0e0aaa8c16e35110VgnVCM1000002fd17898RCRD.*

[70] 2006 NAS Report, *supra* note 4, at 96.

[71] *Id.*

other Government agencies, to seek their views.

6. Consultation in Setting Standards

Section 111 of EISA provides that NHTSA is to consult with the Department of Energy (DOE) and Environmental Protection Agency (EPA) ''on the means of conveying tire fuel efficiency consumer information.'' [72] One of the recommendations of the 2006 NAS Report, which formed the basis for the legislation that became section 111 of EISA, stated that NHTSA should consult with the EPA ''on means of conveying the information and ensure that the information is made widely available in a timely manner and is easily understood by both buyers and sellers.'' [73] NHTSA and EPA will fulfill the statutory consultation requirement in a way that best serves the goals of EISA.

NHTSA consulted with representatives of DOE, EPA, and the Federal Trade Commission [74] who work in consumer information and rating programs. These agencies provided feedback on NHTSA's draft proposal which included valuable comments and insight based on their experiences communicating information on the energy efficiency of consumer products.

7. Application With State and Local Laws and Regulations

Section 111 of EISA contains both an express preemption provision and a savings provision that address the relationship of the national tire fuel efficiency consumer information program to be established under that section with State and local tire fuel efficiency consumer information programs. Section 111 provides:

> Nothing in this section prohibits a State or political subdivision thereof from enforcing a law or regulation on tire fuel efficiency consumer information that was in effect on January 1, 2006. After a requirement promulgated under this section is in effect, a State or political subdivision thereof may adopt or enforce a law or regulation on tire fuel efficiency consumer information enacted or promulgated after January 1, 2006, if the requirements of that law or regulation are identical to the requirement promulgated under this section. Nothing in this section shall be construed to preempt a State or political subdivision thereof from regulating the fuel efficiency of tires (including establishing testing methods for determining compliance with such standards) not otherwise preempted under this chapter.[75]

NHTSA seeks public comment on the scope of Section 111 generally, and in particular on whether, and to what extent, Section 111 would or would not preempt tire fuel consumer information regulations that the administrative agencies of the State of California may promulgate in the future pursuant to California's Assembly Bill 844.

8. Compliance and Enforcement

Section 111 of EISA added a new sub-provision to 49 U.S.C. 32308 (General prohibitions, civil penalty, and enforcement) which reads as follows:

> Any person who fails to comply with the national tire fuel efficiency information program under section 32304A is liable to the United States Government for a civil penalty of not more than $50,000 for each violation.

9. Reporting to Congress

EISA also requires that NHTSA conduct periodic assessments of the rules promulgated under this program ''to determine the utility of such rules to consumers, the level of cooperation by industry, and the contribution to national goals pertaining to energy consumption.'' [76] NHTSA must ''transmit periodic reports detailing the findings of such assessments to the Senate Committee on Commerce, Science, and Transportation and the House of Representatives Committee on Energy and Commerce.'' [77]

III. Which Tires Must Be Rated?

A. Passenger Car Tires

As explained above in section II.B.1 of this notice, EISA specifies that the tire fuel efficiency requirements are to ''apply only to replacement tires covered under [NHTSA's UTQGS regulation].'' [78] Title 49 CFR, section 575.104 applies only to ''new pneumatic tires [79] for use on passenger cars'' with some exclusions of particular types of tires.[80] All terms in 49 CFR part 575 are as defined by statute or in 49 CFR part 571, *Federal Motor Vehicle Safety Standards* (FMVSS).[81] Section 571.139 of title 49 CFR (or FMVSS No. 139, *New Pneumatic Radial Tires for Light Vehicles*) defines ''passenger car tire'' as ''a tire intended for use on passenger cars, multipurpose passenger vehicles, and trucks, that have a gross vehicle weight rating (GVWR) of 10,000 pounds or less.''

Accordingly, today's proposed tire fuel efficiency consumer information program applies only to replacement passenger car tires, or tires intended for use on passenger cars, multipurpose passenger vehicles, and trucks, that have a GVWR of 10,000 pounds or less. These tires often have a tire size designation beginning with a ''P,'' indicating that they are for use on passenger cars. However, they may be designated without the P, sometimes referred to as ''hard metric'' sizes. Note that even though they are classified as light trucks by NHTSA, many smaller sport utility vehicles (SUVs), pickups, and vans are equipped with passenger car tires.[82] The kinds of light- and medium-duty trucks used in commercial service, including full-size pickups and vans, have a GVWR of more than 6,000 pounds. These vehicles are usually equipped with tires having the letters ''LT'' molded into the sidewall.[83] EISA excludes replacement LT tires from the tire fuel efficiency consumer information program.[84]

NHTSA's research included testing of LT tires even though we are not authorized to regulate them through this tire fuel efficiency consumer information program because NHTSA's Phase 1 research was initiated in July 2006, subsequent to the release of the 2006 NAS Report.[85] LT tires represented approximately 16.7 percent of the U.S.

---

[72] 49 U.S.C. 32304A(b). In addition, Executive Order No. 13432 provides that a Federal agency undertaking a regulatory action that can reasonably be expected to directly regulate emissions, or to substantially and predictably affect emissions, of greenhouse gasses from motor vehicles, shall act jointly and consistently with other agencies to the extent possible and to consider the views of other agencies regarding such action.

[73] 2006 NAS Report, *supra* note 4, at 4.

[74] The Federal Trade Commission (FTC) developed the EnergyGuide label to enable consumers to compare the energy use of different models as consumers shop for an appliance. *See http://www.ftc.gov/bcp/edu/pubs/consumer/homes/rea14.shtm* (last accessed June 3, 2009). Section 321(b) of EISA directs the FTC to consider the effectiveness of current lamp disclosures and to consider whether alternative labeling disclosures would be more effective in helping consumers make purchasing decisions.

[75] 49 U.S.C. 32304A(e).

[76] 49 U.S.C. 32304A(c).

[77] *Id.*

[78] 49 U.S.C. 32304A(a)(3).

[79] The term pneumatic tires is a broad one that essentially means air-filled tires. Section 571.139 of title 49 CFR (or FMVSS No. 109, *New Pneumatic Radial Tires for Light Vehicles*) defines pneumatic tire broadly as ''a mechanical device made of rubber, chemicals, fabric and steel or other materials, which, when mounted on an automotive wheel, provides the traction and contains the gas or fluid that sustains the load.'' By contrast, a non-pneumatic tire is a ''mechanical device which transmits * * * the vertical load and tractive forces from the roadway to the vehicle, generates the tractive forces that provide the directional control of the vehicle and does not rely on the containment of any gas or fluid for providing those functions.'' 49 CFR 571.129, *New Non-pneumatic Tires for Passenger Cars.*

[80] 49 CFR 575.104(c)(1).

[81] 49 CFR 575.2, *Definitions.*

[82] 2006 NAS Report, *supra* note 4, at 14.

[83] *Id.*

[84] 49 U.S.C. 32304A(a)(3).

[85] Specifically, of the 25 different models of tires tested in NHTSA's Phase 1 research, 16 tire models were passenger, 9 were light truck tire models; one of the passenger car tires was the ASTM F2493–06 P225/60R16 97S Standard Reference Test Tire (SRTT).

replacement tire market in 2007,[86] and the LT tires studied had nearly twice the rolling resistance as the group of passenger car tires studied.[87] NHTSA notes that it expects test data to be available for many LT tires, as these tires are covered by the Europe and California programs. Nothing in this regulation would prohibit manufacturers from voluntarily rating or reporting data for LT or other excluded tires, as required for covered tires.

B. Replacement Tires

Another issue is how to define ''replacement tire'' for purposes of this program. While most UTQGS requirements apply to all passenger car tires, whether sold as original equipment with a new automobile (OE tires) or as a replacement tire, some apply only to replacement tires. For example, the requirement for a paper label on the tire tread excludes tires ''sold as original equipment on a new vehicle.'' [88] NHTSA is proposing a definition of replacement tires for the purposes of the tire fuel efficiency consumer information program using this language. The agency believes the definition needs to be in terms of the actual sale of the tire, not the intention when manufactured. NHTSA understands that some tires that are manufactured for the OE tire market could be sold as replacement tires, either because the vehicle manufacturer does not purchase all that are manufactured for that purpose, or because the vehicle manufacturer sells excess stock.

C. Tires Within a Tire Model

Tire manufacturers may have different brands, and within each brand different tire models (or tire lines),[89] and tire models are often available in different sizes. For example, Michelin is the manufacturer for the Michelin, BFGoodrich and Uniroyal brands. A popular Michelin brand model is the Pilot, but other models include the Energy or the HydroEdge. And each of these brands is available in different tire sizes, for example a 185/65R14 or a 215/70R15. *See* Figure 3. The model of tire (Pilot) then may be available in several performance levels. In the case in Figure 3 there are 3 different speed ratings for the Pilot model. Performance ratings may also include All-Season, Competition, Touring, Grand Touring, *etc.* Each of these tires may also have different treadwear, traction, temperature and warranty ratings. These models are then available in different tire sizes, for example an Exalto A/S is available in 185/60R14 to 235/40R17. Whereas a Pilot Sport A/S Plus is available in sizes 205/55R16 to 245/45R20, and the Pilot Sport PS2 is available in sizes 225/55R16 to 295/25R22.

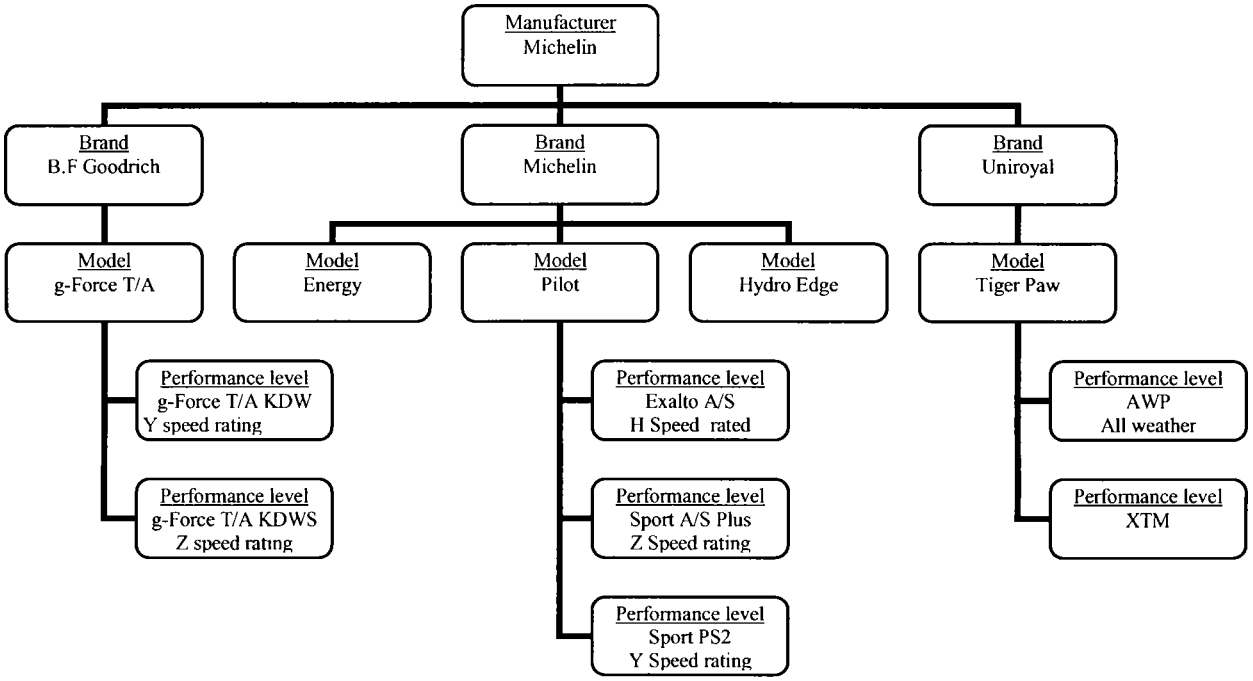

Figure 3. Example of Tire Terminology

In passenger car tire sizes (*e.g.,* 185/65R14), the first three numbers indicate the nominal width of the tire, *i.e.,* width in millimeters from sidewall edge to sidewall edge (185). In general, the larger the nominal width, the wider the tire. The second two numbers in the size designation indicate the ratio of tire height to tire width, or the aspect ratio (65). For aspect ratio, numbers of 70 or lower indicate a short sidewall for improved steering response and better overall handling on dry pavement. The ''R'' indicates that this particular tire is a radial tire, as opposed to bias ply construction, which is indicated by a ''D'' in the size specification. Radial ply construction of tires has been the

[86] Rubber Manufacturers Association, Preliminary 2008 Factbook, *see https://www.rma.org/publications/market_information/index.cfm?CFID=23483353&CFTOKEN=70640000.*

[87] *See* NHTSA Rolling Resistance Rating System Test Development Project: Phase 1—Evaluation of Laboratory Test Protocols (October 2008). A copy of this report and other research reports relied on in this proposal will be placed in the docket.

[88] 49 CFR 575.104(d)(1)(i)(B).

[89] For purposes of the tire fuel efficiency consumer information program, the phrase ''tire line'' and ''tire model'' can be used interchangeably. The agency will generally use the word ''model'' to refer to a particular line of tires.

industry standard for the past 20 years. The last two numbers in the size designation indicate the rim diameter code (14), or the wheel or rim diameter in inches. A change in any of these three numbers indicates a different size specification for a replacement tire.

Research done for the California Energy Commission (CEC) to evaluate test facility capacity to conduct rolling resistance testing indicated that there are well over 20,000 different brand/model/size combinations (or SKUs) [90] of replacement passenger car tires sold in the United States.[91] The CEC research also indicated that it could take up to 2.7 years to test one tire of each SKU once.[92] Additionally, a tire manufacturer has the ability to estimate with relative accuracy the rolling resistance test value of a tire with a given size specification if it knows the rolling resistance test value of a tire in the same model line (*i.e.,* the ability to extrapolate test values for certain SKUs from knowing the actual test values of other SKUs). Tire manufacturers have this same ability to extrapolate for UTQGS traction test values and UTQGS treadwear test values by having actually traction and treadwear test values of other, similar tires of different SKUs. For these reasons, NHTSA tentatively concludes that it is not reasonable or necessary to require a physically-tested value of rolling resistance, traction, or treadwear test value for every combination of tire model, construction, and size (SKU).

However, consumers researching tires should be able to compare tire models and sizes with some reliability. In NHTSA's testing, tires of a size 225/60R16, but manufactured by different companies, and having various performance ratings (*e.g.,* speed rating, all-season specification) had rolling resistance values ranging from 9.8 to 15.2 pounds.[93] Rolling resistance can also vary widely across different sized tires in a brand. In data reported by the CEC, passenger car tires of the same brand and model with different sizes ranged in rolling resistance from 7.5 to 22.8 pounds.[94]

For these reasons, NHTSA is proposing to require each SKU, or each size within each model of each brand, to be *rated* separately for fuel efficiency (using a rolling resistance test value), safety (using a UTQGS traction test value), and durability (using a UTQGS treadwear test value). Tire manufacturers may use their judgment to determine how many and which tires they must test to be able to accurately report rolling resistance ratings. A tire manufacturer will be responsible for the accuracy of the ratings they place upon the tire label and otherwise communicate to consumers. That is, for compliance purposes, NHTSA will test any rated tire according to the test procedures specified in the regulation (regardless of whether or not the tire manufacturer has tested this tire), and if the rolling resistance, traction, or treadwear test value falls outside of NHTSA's specified tolerance range, the agency will consider that rating a noncompliance. *See* discussion of tolerances in section XI of this notice.

For data reporting purposes, a manufacturer must calculate a test procedure value for rolling resistance, traction, and treadwear, although it is not required to conduct the specific test in the regulation. The proposed specified test procedures merely indicate the procedures NHTSA will use to test and rate a replacement tire for compliance purposes. A tire manufacturer is free to reasonably estimate the test values it reports. NHTSA requests comment on the appropriateness of using interpolated values (for instance a rating for a P215/60R16 value calculated from tested values for a P205/60R16 and a 225/60R16) and extrapolated values (for instance the effect of changes in tread pattern for a specific tire construction of known rating) to provide tire ratings.

D. Tires Excluded

NHTSA's UTQGS regulation excludes ''deep tread, winter-type snow tires, space-saver or temporary use spare tires, tires with a nominal rim diameter of 12 inches or less, [and] limited production tires.'' [95] 49 CFR 575.104(c)(1). Since EISA specifies that the tire fuel efficiency requirements are to ''apply only to replacement tires covered under [NHTSA's UTQGS regulation],'' these exclusions are included in today's proposed regulation.[96]

NHTSA's research included testing of two different snow tire models.[97] The two snow tire models tested were within the range of rolling resistance force values of all-season and summer-only passenger tires of the same size. Therefore the specific exclusion of winter-type tires, which represented 4.5 percent of the U.S. replacement tire market in 2007 [98] should not impede the effectiveness of the rating system in reducing U.S. passenger vehicle fuel consumption.

NHTSA requests comments on whether it should include in the manufacturer reporting requirement (*see*

[90] An SKU, or stock keeping unit, is a specific market brand and tire design and size combination. A different SKU can also be indicated by a different specified load rating or speed rating for a particular tire. Specifically, NHTSA is proposing to define stock keeping unit as ''the alpha-numeric designation assigned by a manufacturer to uniquely identify a tire product. This term is sometimes referred to as a product code, a product ID, or a part number.'' *See* section XIII (Regulatory Text) of this notice.

[91] The CEC research estimated 20,708 different replacement passenger car tire SKUs and 3,296 replacement LT tire SKUs. This research was done by Smithers Scientific Services, Inc. (Smithers) and was presented at a CEC staff workshop on February 5, 2009. This presentation is available through the CEC's Web site and also will be available in this docket. *See http://www.energy.ca.gov/transportation/tire_efficiency/documents/index.html* (last accessed Feb. 11, 2009).

[92] The Smithers' research conducted for CEC was estimating various scenarios for testing three of each different replacement passenger *and* LT tire SKU (because California's tire fuel efficiency program covers passenger car and LT replacement tires). The eight different scenarios varied workdays per year, percent capacity available, and hours per day of test operation. Based on estimates of test capacities, the CEC research estimated average test years required to test three tires of each SKU to be between 0.7 and 8.2 years. Thus, for the purposes of testing one of each different replacement passenger car tire SKU, we estimate this would take a maximum of 8.2/3 years, or 2.7 years.

[93] *See* NHTSA Rolling Resistance Rating System Test Development Project: Phase 1—Evaluation of Laboratory Test Protocols (October 2008). A copy of this report and other research reports relied on in this proposal will be placed in the docket.

[94] To examine California's rolling resistance test data, please contact Ray Tuvell of the California Energy Commission. *See http://www.energy.ca.gov/transportation/tire_efficiency/index.html* (last accessed Feb. 13, 2009).

[95] For UTQGS, a limited production tire is defined as ''a tire meeting all of the following criteria, as applicable:

(i) The annual domestic production or importation into the United States by the tire's manufacturer of tires of the same design and size as the tire does not exceed 15,000 tires;

(ii) In the case of a tire marketed under a brand name, the annual domestic purchase or importation into the United States by a brand name owner of tires of the same design and size as the tire does not exceed 15,000 tires;

(iii) The tire's size was not listed as a vehicle manufacturer's recommended tire size designation for a new motor vehicle produced in or imported into the United States in quantities greater than 10,000 during the calendar year preceding the year of the tire's manufacture; and

(iv) The total annual domestic production or importation into the United States by the tire's manufacturer, and in the case of a tire marketed under a brand name, the total annual domestic purchase or purchase for importation into the United States by the tire's brand name owner, of tires meeting the criteria of paragraphs (c)(2)(i), (ii), and (iii) of this section, does not exceed 35,000 tires.'' 49 CFR § 575.104(c)(2).

[96] 49 U.S.C. 32304A(a)(3).

[97] *See* NHTSA Rolling Resistance Rating System Test Development Project: Phase 1—Evaluation of Laboratory Test Protocols (October 2008). A copy of this report and other research reports relied on in this proposal will be placed in the docket.

[98] Rubber Manufacturers Association, Preliminary 2008 Factbook, *see https://www.rma.org/publications/market_information/index.cfm?CFID=23483353&CFTOKEN=70640000.*

section VII.D.1) a requirement that each manufacturer include with its reports a list of all tire models and sizes that it is claiming are excluded from today's proposed requirements (49 CFR 575.106). In particular, the limited production exclusion is not obvious just by examining the tire, and this would allow NHTSA to quickly verify whether or not the lack of a label was an enforcement concern. The agency may include such a reporting requirement in the final regulation.

IV. Rolling Resistance Test Procedure

A. Rolling Resistance

As explained above, rolling resistance is simply the manifestation of all of the energy losses associated with the rolling of a tire under load.[99] Accordingly, in a laboratory, rolling resistance is measured by running a tire under load on a test wheel (referred to as ''roadwheel''). The energy consumed in driving the tire is measured and the energy recovered from the tire is measured by the test equipment. The difference is the heat energy lost which is the measure of rolling resistance. The smaller the difference, the more fuel efficient the tire. NHTSA is only interested in the force required to maintain a steady state of movement, *i.e.,* speed. Therefore the steady state, or constant, speed test methods are the only ones considered by NHTSA.

B. Possible Test Procedures Available To Measure Rolling Resistance

As mentioned previously, subsequent to the recommendations for Congressional action issued in the 2006 NAS Report, NHTSA began a research program to evaluate five existing or proposed test methods to measure the rolling resistance of light vehicle tires, and to examine correlations between tire rolling resistance levels and tire safety performance (Phase 1 Research).[100] The five test methods examined in NHTSA's Phase 1 Research included four established and one draft tire rolling resistance test procedure. The five test methods were as follows:

- Society of Automotive Engineers (SAE) J1269—Sep 2006–09; *Rolling Resistance Measurement Procedure for Passenger Car, Light Truck and Highway Truck and Bus Tires* (Multi Point).
- SAE J1269—Sep 2006–09; *Rolling Resistance Measurement Procedure for Passenger Car, Light Truck and Highway Truck and Bus Tires* (Single Point).
- SAE J2452—Jun 1999; *Stepwise Coastdown Methodology for Measuring Tire Rolling Resistance* (Multi Point).
- ISO 18164:2005(E); *Passenger car, truck, bus and motorcycle tyres—Methods of measuring rolling resistance* (Multi Point).
- ISO 28580; *Tyre Rolling Resistance measurement method—Single point test and measurement result correlation—Designed to facilitate international cooperation and, possibly, regulation building* (Single Point).

The SAE is an international standards organization providing voluntary industry standards.[101] The ISO is a worldwide federation of national standards bodies that prepares standards through technical committees comprised of international organizations, governmental and non-governmental, in liaison with ISO.[102] The standards and test methods published by these bodies are proprietary and protected under U.S. copyright law. Parties who need to or wish to conduct the actual tests themselves may obtain a copy of the standards by contacting either SAE or ISO.

NHTSA's Phase 1 Research used 600 tires of 25 different model/size combinations to evaluate the five rolling resistance test methods at two different laboratories.[103] Tires of each model were purchased with identical or similar build dates and were tested multiple times in each test method, and multiple times at each laboratory.

Figure 4 shows a typical laboratory test machine (used for all five test methods evaluated) for measuring rolling resistance. In this test a tire and rim are mounted on the machine. The tire is held against the roadwheel by an actuating cylinder aligned with the center of the roadwheel. A drive motor coupled to the roadwheel rotates the roadwheel. Consequently, the roadwheel drives the tire through friction at the contact patch. The tire's rolling resistance retards the roadwheel's rotation speed. This effect is then measured using any combination of the forces, torques, speeds, or acceleration of the roadwheel. Then the rolling resistance is calculated from the measured quantities.[104]

A tire's rolling resistance is the energy consumed by a rolling tire, or the mechanical energy converted into heat by a tire, moving a unit distance on the roadway.[105] The magnitude of rolling resistance depends on the tire used, the nature of the surface on which it rolls, and the operating conditions—inflation pressure, load, and speed.[106]

[99] National Highway Traffic Safety Administration, The Pneumatic Tire, DOT HS 810 561, at 483 (February 2006).

[100] *See* NHTSA Rolling Resistance Rating System Test Development Project: Phase 1—Evaluation of Laboratory Test Protocols (October 2008). A copy of this report and other research reports relied on in this proposal will be placed in the docket.

[101] SAE International, 400 Commonwealth Drive, Warrendale, PA 15096–0001, Tel (877) 606–7323, *http://www.sae.org.*

[102] ISO Central Secretariat, 1, ch. de la Voie-Creuse, Case postale 56, CH–1211 Geneva 20, Switzerland, Telephone +41 22 749 01 11, Fax +41 22 733 34 30, *http://www.iso.org.*

[103] This study looked at both Passenger car (P) tires and Light Truck (LT) tires. However, EISA limits the applicability of this rulemaking to P tires only.

[104] National Highway Traffic Safety Administration, The Pneumatic Tire, DOT HS 810 561, at 514–515 (February 2006).

[105] Rolling resistance is, thus, defined as energy per unit distance, which is the same units as force (Joules/meter = Newtons). However, unlike force, rolling resistance is a scalar quantity with no direction associated with it. National Highway Traffic Safety Administration, The Pneumatic Tire, DOT HS 810 561, at 477 (February 2006).

[106] *Id.*

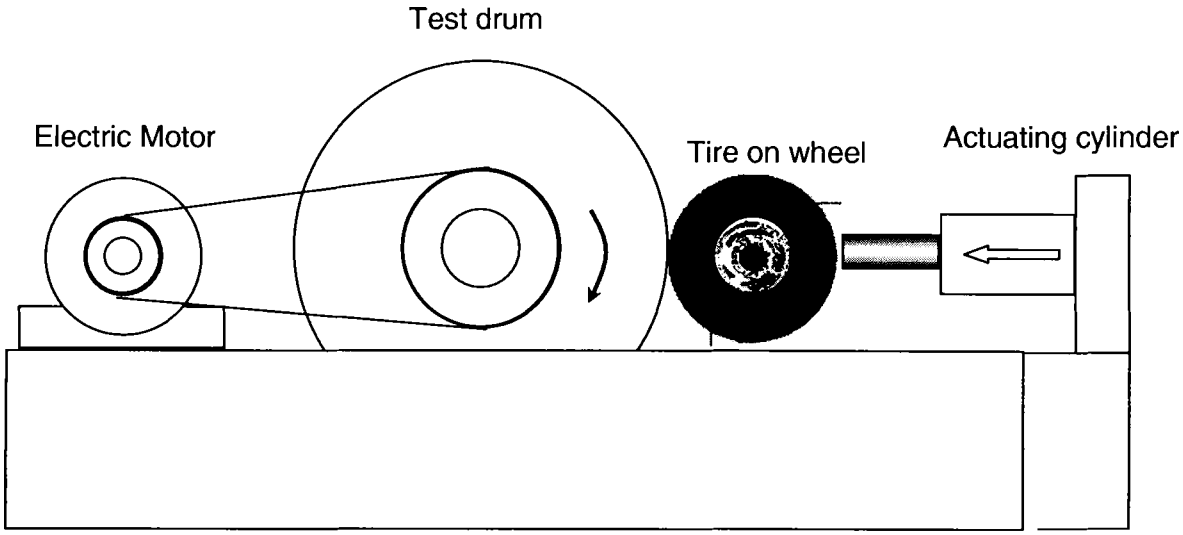

Figure 4. Typical Test Configuration for Rolling Resistance Measurements

Four measurement methods of energy loss are in common use and prescribed in test procedures, although not all of the methods are included in every standard.[107] The methods described in the test standards include the following: measurement of the resistive force at the tire spindle while rolling at constant speed (force method), measurement of the resistive torque on the roadwheel hub at constant speed (torque method), measurement of the electrical power used by the motor to keep the roadwheel rotating at a constant speed (power method), and measurement of deceleration when the driving force at the roadwheel is discontinued (deceleration method).[108] The two methods evaluated in NHTSA research were the force and torque methods. Therefore deceleration and power methods are not discussed further in this notice.

Force Method

The force method measures the force at the tire spindle. *See* Figure 5. The roadwheel is brought up to the specified test speed and the tire is warmed up (warm-up) to an equilibrium temperature. The tire is then lightly loaded [109] to measure the losses caused by the spindle holding the tire and aerodynamic losses from the tire spinning. This force measurement is referred to as the skim load value. The tire is then loaded to the test load and successive readings of the resistive force at the tire spindle while rolling at constant speed are taken until consistent force values are obtained.[110]

[107] The proposed test procedure, ISO 28580, has provisions to use all four methods to measure the energy loss.

[108] National Highway Traffic Safety Administration, The Pneumatic Tire, DOT HS 810 561, at 515 (February 2006).

[109] Lightly loaded is not a specific number of pounds, but just enough load to keep the tire in contact with the roadwheel, so that the speed of the tire is equal to the speed of the roadwheel surface so there is no slippage.

[110] As the machinery ramps up the tire speed to the specified test speed, the force values measured bounce around at first. An accurate measurement can only be taken when the tire is moving at a constant speed and is a constant temperature. Thus, there is a slight delay from ramping up to the specified test speed, and the measurement of an accurate and steady force reading.

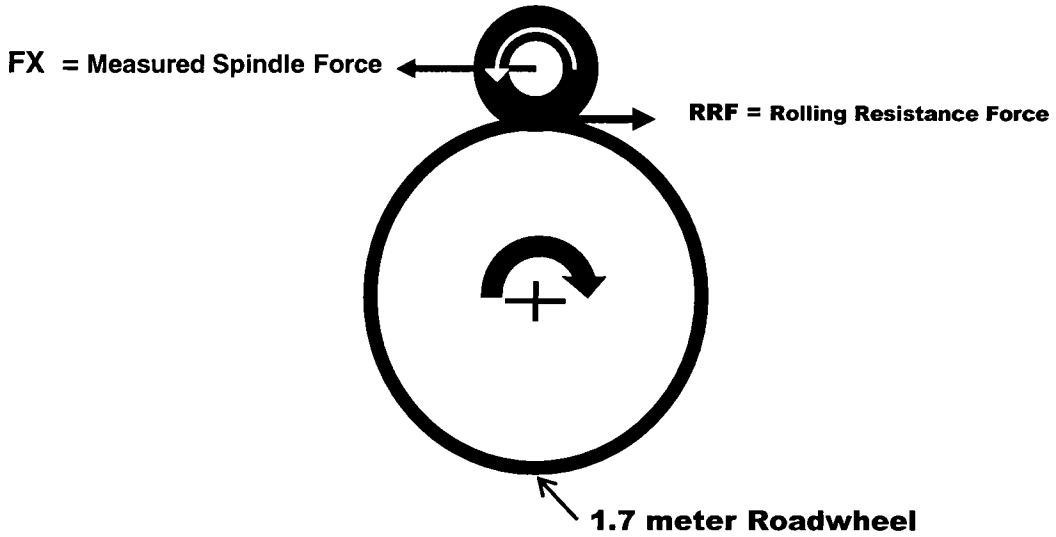

Figure 5. Force Method Rolling Resistance

The reported force value is equal to the measured force at the spindle minus the skim load value, thereby determining the actual Rolling Resistance Force (RRF) value of the tire. This force is trying to slow down the rotation or travel of the roadwheel due to the energy loss.

Torque Method

The torque method measures the energy, or torque, required to maintain the rotation of the roadwheel. The roadwheel is connected to the motor through a ''torque cell.'' *See* Figure 6.[111] The roadwheel is brought up to speed and the tire is warmed up (warm-up) to an equilibrium temperature. The tire is then lightly loaded to measure the losses caused by the spindle holding the tire and aerodynamic losses from the tire spinning (skim load value). The tire is then loaded to the test load and successive readings of the resistive torque on the roadwheel hub at constant speed are taken until consistent force values are obtained.

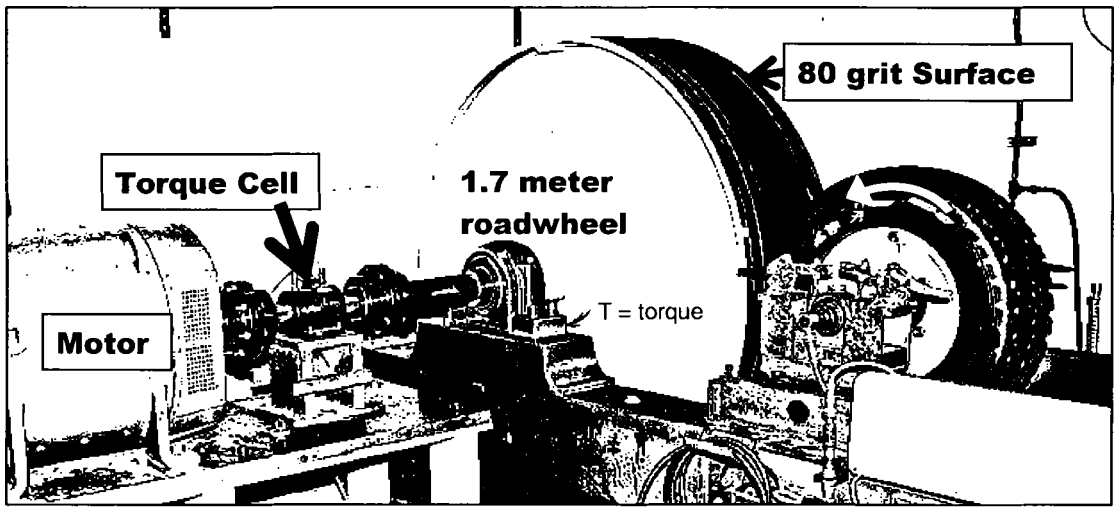

Figure 6. Torque Method Rolling Resistance

The values measured for skim and loaded torque must be processed to determine the force (RRF). The skim must be subtracted from the loaded torque value divided by the radius of the roadwheel to determine the tire's contribution to the total loss. The result is Rolling Resistance Force (RRF).

C. NHTSA Research Results

Some of the technical challenges involved in selection of a test procedure to measure rolling resistance include specifying a test method that avoids variation among laboratories/machines. NHTSA also sought to examine possible tradeoffs between improved rolling resistance and tire safety. The purposes of the NHTSA Phase 1 Research was to:

[111] A color version of Figure 6 will be placed in the docket.

• Benchmark the current rolling resistance levels in modern passenger vehicle tires in terms of actual rolling force, rolling resistance coefficient, as well as indexed against the ASTM F1493–06 Standard Reference Test Tire (SRTT).

• Analyze the effect of the input variables on the testing conditions for non-linear response.

• Select a test procedure that would be best for a regulation.

• Examine the variability of the rolling resistance results from lab to lab, machine to machine.

• Evaluate the effects of first test on a tire versus second test on the same tire.

As discussed above, there can be up to four methods specified for measurement of tire rolling resistance: force method, torque method, power method, and deceleration method. Of these, the force and torque methods are the most commonly used. One test laboratory used in NHTSA's Phase 1 Research evaluated all five rolling resistance procedures on one ''force measurement method'' test machine. The second test laboratory evaluated SAE J2452 on one ''torque measurement method'' test machine and the other four methods on a second ''force measurement method'' test machine. In NHTSA's Phase 1 Research, all work was done using machines with 1.707 meter (67.23 inch) roadwheels with grit surface, which is typical for the United States.[112]

An analysis of variance (ANOVA)[113] was carried out on the data using the General Linear Models procedure of SAS software to evaluate the effects on measured rolling resistance of tire type, lab-to-lab variability, inflation maintenance, and repeat testing on the same tire. For all of the variables analyzed, individual tire type had the most significant effect on the statistical model.

NHTSA's evaluation indicated that all five of the rolling resistance test methods had very low variability and could be cross-correlated to provide the same information about individual tire types.[114] The rank ordering of tire types was essentially the same for each of the test methods evaluated. There was a significant and consistent difference in the data generated by the two laboratories/machines used in this study. Therefore, development of a method to account for lab-to-lab variability is required, either by (1) the use of lab-to-lab correlation equation, based on a reference laboratory, or (2) the use of a Standard Reference Test Tire (SRTT), to normalize data across labs.

NHTSA also examined differences resulting from the method of inflation maintenance, specifically whether inflation pressure was capped[115] or regulated.[116] The pressure rise in the tire during testing using a capped inflation procedure reduced the rolling resistance compared to maintaining the pressure at a constant pressure during the test. Therefore, the choice of a test that uses capped inflation pressure for some or all of the test points should provide a more accurate representation of in-service behavior.

Finally, NHTSA analyzed the effect of repeating tests on the same tire and found that this had little to no effect on test results. Therefore, repeat testing of the same SRTT for lab-to-lab data alignment appears to be viable.

To minimize variability when evaluating the five test methods, tires of each model were purchased with identical or similar build dates. Therefore, the variability of an individual tire model's rolling resistance over a long duration of build dates, or for a single model built at different plants, has not been evaluated by NHTSA.

D. Why Select a Single-Point Test Instead of Multi-Point?

The term ''multi-point'' refers to a method that uses more than one set of conditions to test a tire, usually varying speed, pressure, and/or load. Passenger car and light truck tires generally have different test conditions and can have even a different number of test points in the set of conditions. The goal of multi-point testing is to allow the use of statistical techniques to reduce rolling resistance force measurement variability and to allow prediction of the effect of changes in inflation pressure, tire load and speed on rolling resistance force. The term ''single-point'' refers to a method that uses a single set of test conditions. These conditions are designed to be near the average conditions that a tire would see in its intended service.

NHTSA's evaluation showed that all of the rolling resistance test methods have very low variability and all methods can be cross-correlated to provide the same information about individual tire types. The rank ordering of tire types was essentially the same for each of the rolling resistance test methods evaluated. Equations were derived to accurately convert data from any one test to the expected data from any other test. NHTSA's research has shown that both types of tests essentially produce the same rating if results are normalized as a percentage of RRF measured at each lab for the 16-inch SRTT.[117] Single-point tests are less expensive and shorter than multi-point test methods. Additionally, with single-point tests, data from any method can be correlated to data from any other method. Accordingly, NHTSA tentatively concludes that a single-point, rather than a multi-point, test will better serve the purposes of this program. The agency seeks comments, however on the benefits or drawbacks of using single-point versus multi-point test methods.

E. Why Select ISO 28580 Instead of Other Tests?

Between the two single-point tests, NHTSA is proposing to specify the ISO 28580 test procedure. The ISO 28580 is a draft test method that is now at the final draft international standard (FDIS) stage, and is expected to be balloted and finalized by late April or early May 2009. Since the ISO test is currently being balloted for a final standard, we anticipate only editorial changes at this stage. The differences between the single-point ISO 28580 draft test procedure and the SAE 1269 single-point test procedure are detailed in documents available in the docket.[118] If

[112] Internationally some laboratories use a 2 meter (78.34 inch) roadwheel, often with a bare steel surface.

[113] The term analysis of variance refers to the method of determining if an independent variable, such as tire type, has a significant effect on the dependent variable (rolling resistance) by comparing the magnitude of the variation between the means for different groups of independent variables to the variation estimated for random error.

[114] For this program, each manufacturer will ''self-certify'' the ratings for its tires. The test procedure specified in this proposal is what NHTSA will use for compliance testing, using the proposed tolerance bands as discussed later in this notice (section XI). Even if rolling resistance test data were gathered using other test methods, NHTSA's research shows that equations can translate the data to the test procedure specified in this rule.

[115] Capped inflation is achieved by inflating the tire to the required pressure prior to testing, while the tire is at ambient temperature of the test area, and then sealing the air in the tire during testing with a valve, cap or some other seal.

[116] Regulated inflation pressure is achieved by inflating the tire to the required pressure independent of its temperature, and maintaining this inflation pressure during testing. This is usually performed by using a regulated air (gas) supply external to the spindle, or axle, and connected with a low friction rotary union.

[117] *See* NHTSA Rolling Resistance Rating System Test Development Project: Phase 1—Evaluation of Laboratory Test Protocols (October 2008). A copy of this report and other research reports relied on in this proposal will be placed in the docket.

[118] *See* National Highway Traffic Safety Administration, Tire Rolling Resistance for Light Vehicles, I: Selection of Tires and Tests for Rating

the ISO 28580 test procedure is not a finalized ISO standard by the time of publication of this notice, interested parties may obtain a copy of the draft by contacting Mr. Joe Pacuit, U.S. TAG Secretariat to TC 31, *Tyres, rims and valves.* Mr. Pacuit can be reached by telephone at (303) 666–8121.

One significant difference between the ISO and SAE single-point tests is that ISO 28580 includes a procedure which uses two reference tires to correlate any laboratory/machine to a master laboratory. NHTSA's research showed significant difference between the two laboratories used, and therefore addressing this variation is a significant advantage for the draft ISO standard. Use of the SAE J1269 single-point test would require NHTSA to develop its own procedure to address lab-to-lab variation, and there is insufficient time to complete that work before December 2009, the Congressionally-mandated deadline for this program.

While there are larger numbers of tires tested using the SAE J1269 procedure in the databases NHTSA had access to, NHTSA does not see this as an impediment to adopting the ISO test. NHTSA's research shows that the results from either method can be cross-correlated to provide the same information. Specification of the ISO 28580 single-point test may also allow manufacturers to do one test to comply with both European and U.S. regulations.

Additionally, the ISO 28580 single-point test uses capped inflation pressure, which NHTSA believes will provide a more accurate representation of in-service behavior. NHTSA seeks comment on the specification of the ISO 28580 single-point test, as opposed to the SAE single-point test and all other rolling resistance test methods.

Two optional parameters must be specified for the ISO 28580 single-point test: the method(s) of measurement, and the type of surface on the roadwheel (*i.e.,* textured or bare steel). NHTSA is proposing to allow only the force or torque method during the test procedure, as they are the only two types of machines available to NHTSA in the U.S.

The agency is proposing to specify the use of an 80-grit surface on the roadwheel, instead of a bare steel roadwheel, to avoid potential problems with slippage. The grit surface is the most common surface used in the laboratories available to NHTSA. NHTSA in its research found that the use of the 80-grit surface produced a slightly higher test measurement than using the bare steel surface. The lab correlation (alignment) procedure may account for this difference and correlate results from the two different test conditions. However, there was some evidence of potential problems for smooth steel-surfaced roadwheels in NHTSA Phase 1 testing.[119] In that testing, the rolling resistance of deep-lug tires exhibited a relatively linear behavior on grit surfaces over a range of test loads but dropped off consistently at high loads on smooth steel roadwheels. This was attributed to slippage of the deep lug tires on the smooth surface. Since the discrepancy in results between a smooth and steel roadwheel could lead to rating compliance disputes, we are proposing the grit surface since it is more repeatable.

NHTSA seeks comment as to whether the lab correlation (alignment) procedure will, in fact, account for differences between measurements made using an 80-grit surface on the roadwheel and a properly micro-textured steel-surfaced roadwheel.

V. Proposed Rolling Resistance Rating Metric

The output of the rolling resistance test machines is used to calculate the rolling resistance force (RRF) in pounds of force (lbf) or Newtons (N) at the interface of the tire and drum, or the force at the axle in the direction of travel required to make a loaded tire roll. Rolling resistance is often expressed and reported in terms of Rolling Resistance Coefficient (RRC) (N/kN, kg/tonne, lbf/kip), which is the rolling resistance force divided by the test load on the tire.[120] Since rolling resistance changes with the load on the tire, this makes direct comparisons between the tires tested at different loads difficult. The pending European rating system uses RRC as the metric for a rolling resistance rating/score. However, NHTSA is proposing to base the U.S. tire fuel efficiency rating on the RRF metric. NHTSA has tentatively concluded that a rating based on RRF is more descriptive and would provide more information to consumers, than a rating based on RRC. We request comment on the differences between basing a rolling resistance rating system on RRF versus on RRC, and which is more appropriate for the purposes of our statutory mandate under EISA.

One application of rolling resistance information is a vehicle manufacturer selecting which tires to use for original equipment (OE) fitment. This has been the primary application to date, in large part because information on rolling resistance has been less available to consumers. RRC is appropriate to this application, as a specific vehicle model will be operated with a nominal vertical load on a tire, but a range of tire sizes with varying load capacities are available for OE fitment. Another application, and the one under consideration in this proposed rule, is a consumer looking to replace the tires on their vehicle.[121] NHTSA is concerned about the use of RRC for consumers who are looking to replace tires on their vehicle.

A rating system based on either RRC or RRF would allow a consumer to rank order tires for their vehicles based on their fuel efficiency, and the relative ranking stays the same under either RRF or RRC. Since RRF is a measure of the energy consumed by the tire near the normal operating conditions of the tire in its intended use, numerical differences in RRF correlate well to amount of fuel used. By contrast, because conversion to RRC compresses the range of data, numerical differences in RRC do not correlate as well to the amount of fuel used. Since reducing fuel use is the purpose of this program, we are proposing to use the metric that best correlates to fuel use.

Specifically, when NHTSA compared some possible tire choices for three different vehicles (a Chevrolet Impala, a Chevrolet Silverado, and a Toyota Corolla), we found that a 10 point improvement in a 0 to 100 rating system based on RRF corresponds to a similar amount of fuel saved, no matter what tire size is being selected. By contrast, a 10 point improvement in a 0 to 100 rating system based on RRC results in a small amount of fuel savings for a small car and a larger amount of fuel savings for a large car. Thus, a consumer would not be able to place the same value on a specific level of improvement when purchasing tires for different vehicles in a rating system based on RRC. The details of the agency's examination of low, high, and midrange rolling resistance tires for these three vehicles

System Development, presented to California Energy Commission (Feb. 5, 2009) (also available at *http://www.energy.ca.gov/transportation/tire_efficiency/documents/2009-02-05_workshop/presentations/index.php*).

[119] We note that these wheels did not have the micro-texture required by ISO 28580 for steel-surfaced roadwheels.

[120] Most test procedures specify test load as a percentage of the maximum load rating of the tire being tested. For example, the ISO 28580 test procedure specifies a load of 80% of the maximum sidewall load.

[121] What we will be talking about is the majority of purchases, which are for the same size tire that is currently on the vehicle. This discussion does not address the situation where a consumer has decided to change the size of their tires and/or change from P metric tires to LT tires for other purposes.

is provided in Appendix A of this notice.

The goals of the tire fuel efficiency rating system may fail to be met if the overall system is not intuitive to consumers. Consumers would presumably use the system to purchase tires for their current and subsequent vehicles, and consumers may have multiple vehicles in their family for which they purchase tires. Consumers may be confused by a tire fuel efficiency rating system where differences between ratings for different tire sizes represent different quantities of fuel saved, as they would in a rating system based on RRC. NHTSA is concerned that, under a rating system based on RRC, a consumer who purchases tires for different vehicles would notice these differences in fuel savings for the same difference in ratings, and as a result, question the validity of the ratings.

In contrast a rating system based on RRF preserves the concept that differences in ratings correspond to the same amount of fuel savings across tire sizes. Thus, consumers would find a rating system based on RRF more intuitive since a given change in rating will consistently relate more closely to an amount of fuel saved. For a rating system based on RRF, the agency would be able to state a general rule of thumb that, *e.g.,* for every 10,000 miles you drive a difference of 20 on the rating scale equates to X gallons of fuel saved, which could easily be converted into dollars saved by a better rated tire. NHTSA believes that such direct expressions of money saved are likely to be more effective in informing consumer purchasing decisions. A rating system based on RRC would not be able to have such an understandable and useful rule of thumb because it would differ depending on the test load of the tire. For the foregoing reasons, the agency is proposing that the tire fuel efficiency rating be based on RRF.

VI. Proposed Rating System

A. What Should We Convey to Consumers in a Rating System?

1. Fuel Efficiency

As explained above in section II.A.1, NHTSA is proposing to communicate tire fuel efficiency information in the form of a rolling resistance rating, because rolling resistance corresponds to the amount of fuel used in the form of mechanical energy dissipated to move the tire. Tire rolling resistance is the most effective metric for rating the ''fuel efficiency'' of a tire because rolling resistance force (RRF) measures the energy loss that opposes the direction of travel of the rotating tire and, thus, it directly reduces the efficiency of a vehicle in converting the chemical energy in the fuel to motion of the vehicle.

Based on the rolling resistance force test value measured using the ISO 28580 test procedure, the fuel efficiency rating of a given replacement passenger car tire is calculated using the formula specified by NHTSA, which is discussed in section VI.B.1 below.

2. Safety

i. Potential Safety Consequences

There is a growing appreciation but still a limited understanding of how tire traction, wear resistance, and rolling resistance relate to the practical outcomes of vehicle fuel consumption, crash incidence, and tire service life. One of the past concerns about rolling resistance is that traction and/or treadwear are negatively impacted by changes made to improve rolling resistance.

As part of the research in support of this rulemaking, NHTSA performed and analyzed additional testing with the tires that were used to evaluate the rolling resistance test methods. This testing included UTQGS traction and treadwear testing, additional wet and dry traction testing on an outdoor track, indoor dry traction and treadwear testing, and EPA dynamometer fuel economy testing.[122] This research, with one exception discussed below, did not show that this tradeoff is a given and must occur. However, it may cost more to maintain traction or treadwear with an improvement in rolling resistance.

By putting information on all three parameters on a label, a consumer would factor any possible tradeoffs between rolling resistance, traction, and treadwear, and/or cost differences between tires. That is, with all three ratings on one label, a consumer could see whether they were opting for a decrease in traction and treadwear to gain improved rolling resistance.

Technical literature extensively indicates that the tradeoff between fuel economy and safety performance can be significantly reduced or eliminated with advanced compounding technologies, which are usually more expensive and proprietary. However, many aspects of the tire's construction and manufacture affect how much tradeoff remains, and the results of implementing silica tread technology will vary between manufacturers (which ranges from manufacturers who have decades of experience with the technology to manufacturers who have none). It is hoped that increased consumer awareness may help to spur technological innovation to promote simultaneous improvements along several dimensions. At least for the near future, however, the agency cannot guarantee that there will not be a tradeoff between fuel efficiency and safety.

Therefore, NHTSA is concerned about the potential negative safety consequences that may occur if consumers, motivated by potential fuel savings, begin to purchase tires with better rolling resistance ratings but are unwilling to spend additional money to also maintain wet traction levels. Despite having the wet traction rating on the same sticker, some manufacturers may defer the use of the more expensive silica tread technologies and instead optimize tires to lower rolling resistance and treadwear (another important purchase motivator) at the expense of wet traction in order to gain a price advantage. This may be especially prevalent in the lower-cost segments of the market.

A survey of the current marketplace was undertaken to estimate what information consumers currently have for choices in wet traction, price, and, where available, rolling resistance performance of tires. From the NHTSA ratings in *http://safercar.gov* and tires available at TireRack.com, approximately 20 percent of tires currently have traction ratings of AA, 70 percent have ratings of A, and 10 percent have ratings of B. There were no C-rated tires for on-road passenger vehicle use. From the NHTSA data and the data from the California Energy Commission and Consumer Reports magazine, it appears that tire makers design most tires with AA wet traction rating for flag-brand and high-performance tires with correspondingly high average selling prices. Data for rolling resistance, wet traction, and list price performance indicate that tires with both A-traction rating and low rolling resistance performance are available at all list price levels.

ii. Test Procedure

Whereas rolling resistance is a standard measurement for characterizing and comparing tire energy performance, less comprehensive data exist in the public domain for accurate characterizations of tire traction. There are different methods of evaluating traction. For example, the UTQGS rating and the European wet

[122] *See* NHTSA Tire Rolling Resistance Rating System Test Development Project: Phase 2—Effects of Tire Rolling Resistance Levels on Traction, Treadwear, and Vehicle Fuel Economy (February 2009). The research reports from this Phase 2 research will be placed in the docket.

grip rating use different test procedures which do not evaluate the same elements.

The test procedure specified in the UTQGS rating systems for traction is the only metric for which consistent data are widely available for a range of tires. Accordingly, NHTSA is currently proposing to use the traction test procedure specified in the agency's UTQGS regulation to rate tires for safety on the same scale and label as fuel efficiency via rolling resistance rating. *See* 49 CFR 575.104(f). The UTQGS traction test procedure measures a tire's coefficient of friction when it is tested on wet asphalt and concrete surfaces. The subject tire is placed on an instrumented axle of a skid trailer, which is pulled behind a truck at 40 miles per hour (mph) on wet asphalt and concrete surfaces. The trailer's brakes are momentarily locked, and sensors on the axle measure the longitudinal braking forces as it slides in a straight line. The coefficient of friction is then determined as the ratio of this sliding force to the tire load.

The UTQGS traction rating procedure specifies that the traction coefficients for asphalt and for concrete are to be calculated using the locked-wheel traction coefficient on the tire, or sliding coefficient of friction. Because it uses the sliding coefficient of friction, this test procedure indicates the traction or wet pavement behavior for a vehicle that is not equipped with anti-lock brakes (ABS) or electronic stability control (ESC). A vehicle equipped with ABS or ESC reacts to braking and sliding in a more sophisticated way. ABS prevents wheel lock-up by pumping the vehicle's brakes repeatedly during braking events. ESC may automatically perform activation of the brakes on individual wheels in an attempt to slow down a vehicle and point it in a different direction if the system senses a directional loss of control. NHTSA's tire testing research showed that for a tire with a given rolling resistance, vehicles equipped with ABS or ESC will exhibit safer behavior on wet pavement (*i.e.,* better traction) than the sliding coefficient of friction traction measurement would indicate in the UTQGS traction test procedure.

The peak coefficient of friction is a metric that would better indicate traction performance for vehicles equipped with these advanced braking and handling systems. This is because as soon as ABS causes the vehicle to reapply the brakes (and also during ESC system activation), the tires are constantly operating at or near peak coefficient of friction. Thus, since most new cars offer ABS as either standard or optional equipment, and ESC is being mandated on new light vehicles via a phase-in, NHTSA is proposing to base the traction rating for purposes of the tire fuel efficiency consumer information program on the peak coefficients of friction as measured on the asphalt and concrete surfaces specified in the UTQGS traction test procedure.[123] The machinery that conducts this test already measures peak coefficient of friction, so there is no new measurement that needs to be taken.

However, recognizing that the median age for the U.S. passenger car fleet is 9.4 years,[124] NHTSA requests comments on whether it is premature to suggest moving to an ABS–ESC focused rating based on new vehicles. Within the agency's Phase 2 data, tires of the same size had as much as 30 percent difference in wet slide numbers over the range of rolling resistance values. From the 40 mph wet slide friction numbers, a 30 percent difference in wet slide number translates into an increase of 27 feet (13 percent) in calculated wet stopping distance for a non-ABS equipped vehicle. Therefore, it may be necessary to address both peak and slide friction numbers, at least for the near term. The agency has considered a safety rating taken from the average of the four friction numbers (peak & slide on asphalt & concrete), all of which can be collected during the same test. The agency requests comments on whether it should instead consider a composite test, and if the four friction numbers should be weighted equally or differently.

The tire label mandated by Europe in ECE Regulation 117 includes the wet grip test. However, NHTSA would need to do its own evaluation of that test before specifying it in our regulation. NHTSA seeks comments on other ways to rate replacement tires for safety.

3. Durability

The rolling resistance, traction, and wear characteristics of tires are not independent of one another. The tread has a major influence on rolling resistance because it contains much of the rubber in the tire that causes energy loss. The same tread deformation contributes to the tire's traction capabilities. A loss in traction capability because of treadwear is the main reason for tire replacement.[125]

NHTSA tentatively concludes that the durability of a tire refers to how long a tire is going to last, that is, how long it is going to maintain sufficient tread depth for the safe operation and maintain the strength the tire had when it was initially purchased. A treadwear rating measures a tire's wear rate compared with that of control tires. Treadwear life, therefore, corresponds to treadwear durability of a tire. NHTSA seeks comments, however, on other potential ways to communicate durability.

The UTQGS rating systems for treadwear is the only metric for which consistent data are widely available for a range of passenger car tires. Accordingly, NHTSA is proposing to specify the UTQGS treadwear procedure to rate tires for durability on the same scale and label as fuel efficiency via rolling resistance rating. *See* 49 CFR 575.104(e). Based on the UTQGS rating for treadwear as calculated under 49 CFR 575.104(d)(2)(i), the durability rating of a given replacement passenger car tire on a scale of 0 to 100 is calculated by dividing the UTQGS treadwear rating by ten, as explained in further detail below.

NHTSA acknowledges the limits of the existing UTQGS system.[126] Very few participants in the focus groups were aware of these ratings. In a roundtable discussion sponsored by the California Energy Commission dealers uniformly dismissed the system as not providing valuable or reliable information. In fact, those dealers expressed skepticism about tire fuel efficiency ratings if they were ''just another UTQGS rating.'' However, given the statutory deadline for NHTSA to establish this program, NHTSA believes that modified UTQGS ratings for traction and treadwear are the only viable options at this time to fulfill the statutory requirement that this consumer information program educate consumers about tires' relationships to fuel efficiency, safety, and durability.

NHTSA seeks comment, however, on other test methods that could be easily used to establish metrics for safety or durability ratings. As noted above, as part of the research in support of this rulemaking, NHTSA performed and analyzed additional testing with the tires that were used to evaluate the rolling resistance test methods. NHTSA

[123] The phase-in electronic stability control (ESC) requires 100 percent of the fleet to be equipped with ESC by model year 2011, *i.e.,* by September 2010. 72 FR 17236, 17291. Since an anti-lock braking system (ABS) provides many of the components necessary for ESC, NHTSA believes that most manufacturers will likely equip vehicles with ABS as they equip them with ESC. *See id.* at 17256, n. 49.

[124] *See http://usa.polk.com/News/LatestNews/News_20080215_scrappage.htm* (last accessed Mar. 10, 2009).

[125] 2006 NAS Report, *supra* note 4, at 58.

[126] The UTQGS is discussed in more detail later in this notice.

did some indoor treadwear testing in our research program, but merely to provide some comparative information, not to substitute a different test protocol. NHTSA will, however, consider future revisions if information suggests those revisions would enhance the program.

4. Overall Rating

For the purposes of the final rule, the agency is also considering the concept of a combined rating of some sort, which would convert all three benefit metrics into one overall rating. NHTSA notes that in considering how to revise and improve its New Car Assessment Program (NCAP), it sought public comment on the roughly parallel notion of simplifying inter-vehicle comparisons and purchase decision making by consumers by combining the individual safety ratings for different crash modes into a single overall rating. Ultimately, the agency adopted plans to develop and implement such a summary rating.

The advantage of such a system for tire performance ratings would be that it would simplify the ratings, potentially relieving consumers of the task of weighing the ratings for three different metrics for one tire against the three ratings for another tire. At the same time, if the single combined rating were presented to the exclusion of individual ratings for each metric, it would obscure the relative performance of individual components that might carry different priorities with different consumers.

Ideally, the goal would be to express the combined rating in terms that are readily understandable and of practical value to the average consumer. The following example attempts to do this by combining the three ratings into a single absolute (as opposed to relative) cost per mile figure reflecting the full cost of buying and using a tire. The in-use costs of a tire would be based on each of the ratings and the useful life of the tire, reflecting the real-world significance of each of the ratings.

- The in-use cost of the fuel efficiency rating would reflect money spent on fuel consumed.
- The in-use cost of the durability rating would reflect money spent on purchasing replacement tires more or less frequently.
- The in-use cost of the safety rating would reflect money spent on traction-related crashes.

Implementing such a combined rating would face several hurdles, especially regarding the safety rating. For example, how would the safety of any particular tire be measured and what baseline would it be measured against? Further, in order to attempt to convert the safety (traction) rating into stopping distance, potentially costly and time consuming testing for the wide variety of tires would be necessary. An example of such a combined rating for tires might be one expressed in terms of average overall cost/mile.

The agency seeks comments as to whether such a combined rating could be developed and, if so, should be adopted in the final rule and implemented. The agency seeks comments on the relative advantages and disadvantages of a single combined rating, the three rating system in our proposal, and a third approach combining the first two approaches.

B. How Should We Convey Ratings Information to Consumers?

In support of this rulemaking, NHTSA contracted with a strategic communications firm to conduct consumer focus groups to review possible labels and other informational materials. Two focus groups were conducted in three locations, with a total of 54 participants. During the focus groups the participants discussed vehicle safety and fuel economy in general, their tire purchase process, their interest in information about tire fuel efficiency and how they might use it in the tire purchase decision process, and their reaction to five possible label designs.[127] NHTSA anticipates conducting additional consumer testing. The agency seeks comment on our focus group consumer testing and the scope, content, and methodology of future consumer testing.

The tested label designs consisted of different combinations of elements of existing vehicle and/or energy rating schemes. Specifically the designs were developed as different combinations of a red-to-green shaded color scheme as in the European energy labels, stars, numbers, and/or letter grades. One design had a vertical orientation of the rating scale similar to the European label. One design used a 3-axis radar chart. Based on the feedback in the focus groups, NHTSA is proposing to express ratings for tire fuel efficiency (*i.e.,* rolling resistance), safety (*i.e.,* traction), and durability (*i.e.,* treadwear) on a scale of 0 to 100, with 100 being the best rating, and zero being the worst rating.

NHTSA's proposal differs from the European tire fuel efficiency rating system. The European tire label divides the fuel efficiency rating into seven bins, or seven ranges of rolling resistance scores, each range (or bin) represented by a letter, A through G. This is the same letter rating the system used in Europe for rating the energy efficiency of household appliances,[128] and is already well known by consumers in Europe. In contrast, U.S. consumers do not have a preexisting association between letter grades and energy efficiency ratings. Thus, NHTSA is proposing the ratings scales that tested best in the agency's consumer research.

NHTSA's proposal also differs from manufacturer suggestions that NHTSA develop a rating based on five bins, similar to NHTSA's New Car Assessment Program (NCAP).[129] In the focus groups, most of the label designs showed ratings based in bins. The reason for NHTSA's proposal is that participants overwhelmingly preferred the design that showed a numerical rating on a scale of 0 to 100.

Last, NHTSA's proposal differs from the EPA's Energy Star program. In large part this is because of participants' preference for greater discrimination in the rating. In addition, NHTSA's proposal to require manufacturers to report actual test data will allow for the use of such test data to provide additional useful comparative information as discussed later in this notice when NHTSA discusses its planned consumer education program. *See* section VIII.

In consumer testing, NHTSA used both stars (as in the NCAP program) and letter grades (as in the European proposal) representing fuel efficiency grades given based on which range of rolling resistance values, or bin, the tire fell within. While both of these were understood by the participants, the numerical scale giving an individual score for a tire in each category of rating was preferred. Most consumers indicated that they preferred the greater precision of the 0 to 100 rating scale than a 5-point grading scale.[130] A specific score gives consumers a greater ability to discriminate between tires.

In NHTSA's research, consumer focus groups also expressed a clear preference to have fuel efficiency, traction, and

[127] *See* NHTSA Rolling Resistance Focus Group Report (January 2008). A copy of this report and other research reports relied on in this proposal will be placed in the docket. In reviewing these findings, it is important to remember that qualitative research, by design, is not meant to be projectable within accurate statistical ranges. Focus groups allow for the understanding and investigation of group consensus, not individual reactions. Qualitative research offers insight into the thematic and directional information of the participants.

[128] *See* Council Directive 1992/75/EC, 1992 O.J. (L 297).

[129] *See http://www.safercar.gov/*; 73 FR 40016 (July 11, 2003).

[130] NHTSA Rolling Resistance Focus Group Report, at 7–8 (January 2008).

treadwear ratings appear on identical scales, *i.e.,* they expressed distaste for the sample ratings graphic that displayed fuel efficiency on a 0 to 100 scale, traction using letter grades, and treadwear on a different scale. It is true that consumer preferences are not necessarily conclusive on appropriate design. What matters is what design is most helpful in facilitating choice, and judgments in focus groups may not be conclusive on that question. But with reference to the goal of ensuring both simplicity and transparency, NHTSA is proposing to require all three ratings be expressed on a scale of 0 to 100. As noted, NHTSA invites comments on how to ensure that these ratings are as meaningful as possible to consumers.

One of the labels tested included an overall rating, which was generally well-received. Some participants raised their concern that the overall rating was an average of the three factors (fuel efficiency, traction and tread wear), treating them as if they were equally important when in fact few consumers consider them equally important in their own purchase decision. In the end, most felt the overall rating was still useful, as long as each dimension on the label had a rating, as then consumers could separately weigh the factors that were important to them, if necessary.

As noted above, NHTSA is not proposing any regulatory text for an overall rating in today's notice; however we are considering how we might do this for the final rule. NHTSA shares the focus group participants' concern that an overall rating not just be an average, but instead somehow reflect the relative value on some common scale of the three ratings. As discussed above in section VI.A.4, an example of such a system might be expressed as average overall cost per mile. The advantage of such a system would be that it would simplify the ratings. However, at the same time, it would obscure the relative performance of individual components which might carry different priorities with different consumers.

In addition, the agency is uncertain as to whether such a combined rating would be practicable. Developing a cost-per-mile estimate would require addressing the myriad of complications expressed in the Fuel Economy, Safety, and Durability sections above. For example, how would the safety of any particular tire be measured and against which baseline would it be measured? The agency cannot identify poor tire traction as the cause of a crash, but may be able to estimate potential benefits or disbenefits from modified stopping distances that result with different traction ratings. How would potential safety impacts be valued? Should values include estimates of the value of life and degradation in quality of life, or just the economic impacts that result from death and injury and property damage? Since these estimates would represent average impacts spread across society, would they be meaningful to individual tire purchasers?

As noted above, the agency requests comments as to whether such a combined rating could be developed and, if so, should be adopted in the final rule and implemented. The agency seeks comments on the relative advantages and disadvantages of a single combined rating, the three rating system in our proposal, and a third approach combining the first two approaches. NHTSA requests comments on the concept of an overall rating, including the more detailed discussion of how to value these ratings later in this notice or other ideas of how to combine ratings for an overall rating.

1. Proposed Rating Formulas

i. Fuel Efficiency

As explained above, based on the feedback in the focus groups, NHTSA is proposing to express a tire fuel efficiency rating on a scale of 0 to 100, with 100 being the lowest rolling resistance or best rating, and zero being the highest rolling resistance or worst rating. This integer fuel efficiency rating from 0 to 100 (R_{FE}) can be calculated from an ISO 28580 test value of rolling resistance force (RRF) as follows:

$$R_{FE} = (RRF_{max} - RRF) * 100/(RRF_{max} - RRF_{min})$$

where RRF_{max} is the highest rolling resistance the agency believes should be represented on the fuel efficiency rating scale and where RRF_{min} is the lowest rolling resistance the agency believes should be represented on the fuel efficiency rating scale.

Regarding these minimum and maximum RRF values that define the bounds of the fuel efficiency scale, NHTSA's testing research combined with a RRF dataset that California shared with the agency showed RRF test values of replacement passenger car tires ranging from 7.5 to 22.8 pounds-force (lbf). We are, therefore, proposing a rolling resistance force scale ranging from 5 lbf to 25 lbf, where 25 is the highest rolling resistance and thus, the replacement tire with the worst fuel efficiency,[131] representing a zero on the fuel efficiency rating scale. The agency is proposing this range because the high end of the rolling resistance scale range should be set at close to the level of the current worst performing tires, since we should not expect tires developed subsequent to this program to get worse fuel efficiency. Allowing for the existence of some tires with higher rolling resistance test values than the selection of replacement tires tested by NHTSA and California, we moved up the estimate of highest rolling resistance force to 25 (from 22.8).

Regarding the low rolling resistance end of the rating scale, even though the combined dataset had tires with an RRF as low as 7.5 lbf, NHTSA is proposing to set this 100 end of the scale based on an RRF of 5.0 lbf, because we believe it is possible to construct tires with improved rolling resistance and the rolling resistance scale should allow sufficient room to express that improvement. NHTSA's research has found that while tire construction need not sacrifice traction or treadwear for improved rolling resistance, maintaining the same traction and treadwear while increasing the fuel efficiency of a given tire typically entails higher costs. *See* safety discussion above in section VI.A.2 of this notice. The agency wants to allow for such future technological innovation in the fuel efficiency rating scale.[132]

Based on NHTSA's proposed rolling resistance force scale of all replacement passenger car tires, a tire fuel efficiency rating would be calculated by the following formula:

$$R_{FE} = (25 - RRF) * 100/(25 - 5) = (25 - RRF) * 5$$

Using this fuel efficiency rating formula, the tires tested by NHTSA and California would fall between 11 and 88 on the 0 to 100 fuel efficiency rating scale. NHTSA seeks comments on this and other possible constructions of the fuel efficiency rating.

As mentioned above, one of the reasons the agency is basing the fuel efficiency rating on RRF rather than RRC is because it allows the program to readily provide consumers with a statement such as ''a difference of X on the fuel efficiency rating scale equates to Y gallons of fuel saved.'' We have calculated that for the proposed fuel efficiency rating scale, a general rule of thumb is that for every 10,000 miles you drive, a difference of five on the scale equates to three gallons of fuel saved when you purchase four tires and a difference of ten on the scale equates to six gallons of fuel saved.

[131] Note that higher rolling resistance force measurements indicate a greater amount of energy lost through the tires and converted to heat. This indicates a lower fuel efficiency of a tire.

[132] If future technology made improvements possible that would allow tires to exceed the range of this or the other two scales, NHTSA would consider future rulemaking to adjust the scales.

ii. Safety

As explained above, NHTSA is proposing to specify that the safety (*i.e.,* traction) rating, for purposes of the tire fuel efficiency consumer information program, be calculated using the peak coefficients of friction, which are friction coefficient numbers that are also recorded by the test equipment used in UTQGS traction rating procedure. The agency is proposing to specify the measurement of the peak coefficients of friction on both asphalt and on concrete, as opposed to the sliding coefficients of friction, as specified in the UTQGS traction test procedure. These measurements of peak coefficient of friction on asphalt and peak coefficient of friction on concrete must be ''adjusted,'' or correlated to a standard reference test tire, because asphalt and concrete surfaces can vary from day to day. Thus, there must be some standardized tire to which the test can calibrate. This is true for the sliding coefficients of friction measured as well.

For the safety (*i.e.,* traction) rating, the agency is proposing to require tire manufacturers to report the Adjusted Peak Coefficient of Friction for Asphalt (μ_{APA}) and the Adjusted Peak Coefficient of Friction for Concrete (μ_{APC}) by testing in accordance with 49 CFR 575.104(f) and recording the average peak coefficients of friction and then adjusting the measured average peak coefficients of friction for asphalt and concrete, respectively, using the following formulae:

μ_{APA} = (Measured Candidate Tire Average Peak Coefficient of Friction for Asphalt + 0.75) − (Measured Standard Tire Average Peak Coefficient of Friction for Asphalt)

μ_{APC} = (Measured Candidate Tire Average Peak Coefficient of Friction for Concrete + 0.60) − (Measured Standard Tire Average Peak Coefficient of Friction for Concrete)

The two constants, 0.75 and 0.60, are based on agency test data for the adjustment of the average peak coefficients of friction for asphalt and concrete pavements, respectively. The agency might change these two numbers if the repaving of the skid pad surfaces at the agency's San Angelo Test Facility results in a shift of these numbers on each surface. NHTSA is seeking comments and proposals on this approach, including the use or change of these constants.

In addition to the adjusted peak coefficients of friction, the agency is also proposing to require tire manufacturers to report the traction rating using the following formula:

R_{TC} = Adjusted Peak Traction Rating = $\{(\mu_{APA} + \mu_{APC})\ \{1 - [(\mu_{APA} - \mu_{APC})/(\mu_{APA} + \mu_{APC})]^2\} - 0.6\} * (100/2.0)$

The agency proposes this formula as a convenient way to obtain a single rating for both asphalt and concrete, and normalizing the expected range to a scale of 0 to 100.[133]

The ''$(\mu_{APA} + \mu_{APC})\ \{1 - [(\mu_{APA} - \mu_{APC})/(\mu_{APA} + \mu_{APC})]^2\}$'' portion of the R_{TC} formula has been developed with the intention of encouraging tire manufacturers to design tires with little disparity between μ_{APA} and μ_{APC}. That is, if $\mu_{APA} = \mu_{APC}$, ''$(\mu_{APA} + \mu_{APC})\ \{1 - [(\mu_{APA} - \mu_{APC})/(\mu_{APA} + \mu_{APC})]^2\}$'' would be equal to $(\mu_{APA} + \mu_{APC})$ and thus the highest rating possible is achieved for a given set of coefficients of friction since no deduction to the rating is assessed due to the disparity of the coefficients of friction between asphalt and concrete. This approach is consistent with the current traction rating philosophy of UTQGS which penalizes a tire's rating if either the asphalt or concrete coefficients are in a lower relative category than the other adjusted coefficient.

Based on data available to date at the agency's San Angelo Test Facility, NHTSA estimates the minimum Adjusted Peak Coefficient of Friction for Asphalt is 0.4, the maximum Adjusted Peak Coefficient of Friction for Asphalt is 1.2, the minimum Adjusted Peak Coefficient of Friction for Concrete is 0.3, and the maximum Adjusted Peak Coefficient of Friction for Concrete is 1.1, for an additive range spanning from 0.7 (*i.e.,* 0.4 + 0.3) to 2.3 (*i.e.,* 1.2 + 1.1). For the purpose of allowing future tire traction improvement, the agency is proposing to expand the estimated Adjusted Peak Coefficient of Friction range of 0.7 to 2.3 to a range of 0.6 to 2.6, where 0.6 would represent a zero on the traction rating scale and 2.6 would represent a 100 on the traction rating scale. The agency proposes this range because we believe it is technically possible to construct tires with improved traction and the traction rating scale should allow sufficient room to express that improvement.

The agency then shifts and normalizes ''$(\mu_{APA} + \mu_{APC})\ \{1 - [(\mu_{APA} - \mu_{APC})/(\mu_{APA} + \mu_{APC})]^2\}$'' from the range of 0.6 to 2.6 to a 0 to 100 rating scale and arrives at the aforementioned R_{TC} formula.[134]

Using the R_{TC} traction rating formula, NHTSA's estimated range of additive Adjusted Peak Coefficient from 0.7 to 2.3 would fall between 5 and 85 on the 0 to 100 safety (wet traction) rating scale. NHTSA is seeking comments and proposals on this approach.

As mentioned above, our safety (traction) rating formula and supporting equations were developed based on limited test data and in advance of traction test resurfacing at our San Angelo Test Facility. Consequently, it is difficult to precisely predict the probable range of adjusted peak coefficients across all replacement tires and, therefore, to calculate the resultant expected safety (wet traction) rating range for existing tires. We plan to update the formula and supporting equations in the final rule with additional data and with test data gathered after the track is resurfaced in order to bring the rating scale to a range that can be expected for state of the art tires. We also request comments on how much to amend the rating formula for the final rule to expand the rating scale at the minimum and/or maximum ends of the scale to allow for future potential wet traction improvements.

In terms of what this scale would mean to consumers, a traction rating is difficult to quantify. That is, it is not as straight forward as it is for a fuel efficiency rating to develop a rule of thumb for the safety rating scale such as ''each difference of X on the safety rating scale equates to Y percent fewer crashes and Z dollars less in resultant economic damages.'' NHTSA would have to try and correlate a rating with a set stopping distance, and then that distance with crashes. These calculations are complicated by the fact that they depend on other factors (in addition to the traction rating of the tires) such as the handling characteristics of the vehicle on which they are mounted, the force with which the brakes are applied, and the loading of the vehicle. To put a tire's safety rating information on an economic scale, all of these characteristics would have to be assumed for all tires. But in reality, there is not a single vehicle that all replacement tires can be mounted on. Therefore, we are concerned that the difference between two such tire safety ratings would not reflect the same economic difference in terms of safety, where the tires were mounted on two different types of vehicles. What we can communicate with the proposed rating

[133] This formula is an adaptation of the Fahrenheit to Centigrade (also a 0 to 100 scale) conversion formula.

[134] The agency notes that the formula for R_{TC} reduces to a simpler form than that which is specified above. For the NPRM we have not reduced the formula so that the public can see where maximum and minimum peak coefficients are used in the equation and to make it clear that it includes a ''rating penalty'' for tires with different coefficients for asphalt and concrete. We believe this is important since these values may change based on additional data and on retesting after our test track has been repaved.

is that tires with better traction ratings stop in less distance than tires with worse ratings.

iii. Durability

Existing treadwear grades in UTQGS range up to 800. Therefore, NHTSA is requiring that the UTQGS treadwear grade be divided by 10 and that number placed on the 1 to 100 scale. This treadwear rating scale will allow for the possible technological development of replacement tires with higher treadwear ratings in the future. Accordingly, if TW_{UTQGS} is the UTQGS rating for treadwear as calculated under 49 CFR 575.104(d)(2)(i), then NHTSA is proposing the treadwear rating for purposes of the tire fuel efficiency rating program (R_{TW}) be calculated according to the following formula:

$$R_{TW} = TW_{UTQGS}/10$$

In terms of what this scale would mean to consumers, the treadwear conversion is straightforward, as the treadwear rating is a relative rating compared to a control tire, which would be rated 10 on our scale. A tire rated 20 should last twice as long as a tire rated a 10. Similarly, a tire rated a 75 on the proposed traction scale would last three times longer than a tire rated 25 on the proposed traction rating scale.

2. Proposed Label Style

NHTSA is proposing to require tire manufacturers to affix a paper label with the fuel efficiency, safety, and durability ratings in the form illustrated in Figure 7.[135] This label is based upon the ratings presentation that tested best with consumers in focus groups conducted by the agency. In NHTSA's consumer focus group research the agency considered and presented consumers with five different ratings graphics containing ratings for fuel efficiency, traction, and treadwear. The ratings graphics were presented in various colors, with various picture icons, and experimented with horizontal rating scales as well as vertical rating scales. *See* Figure 8 through Figure 12.[136]

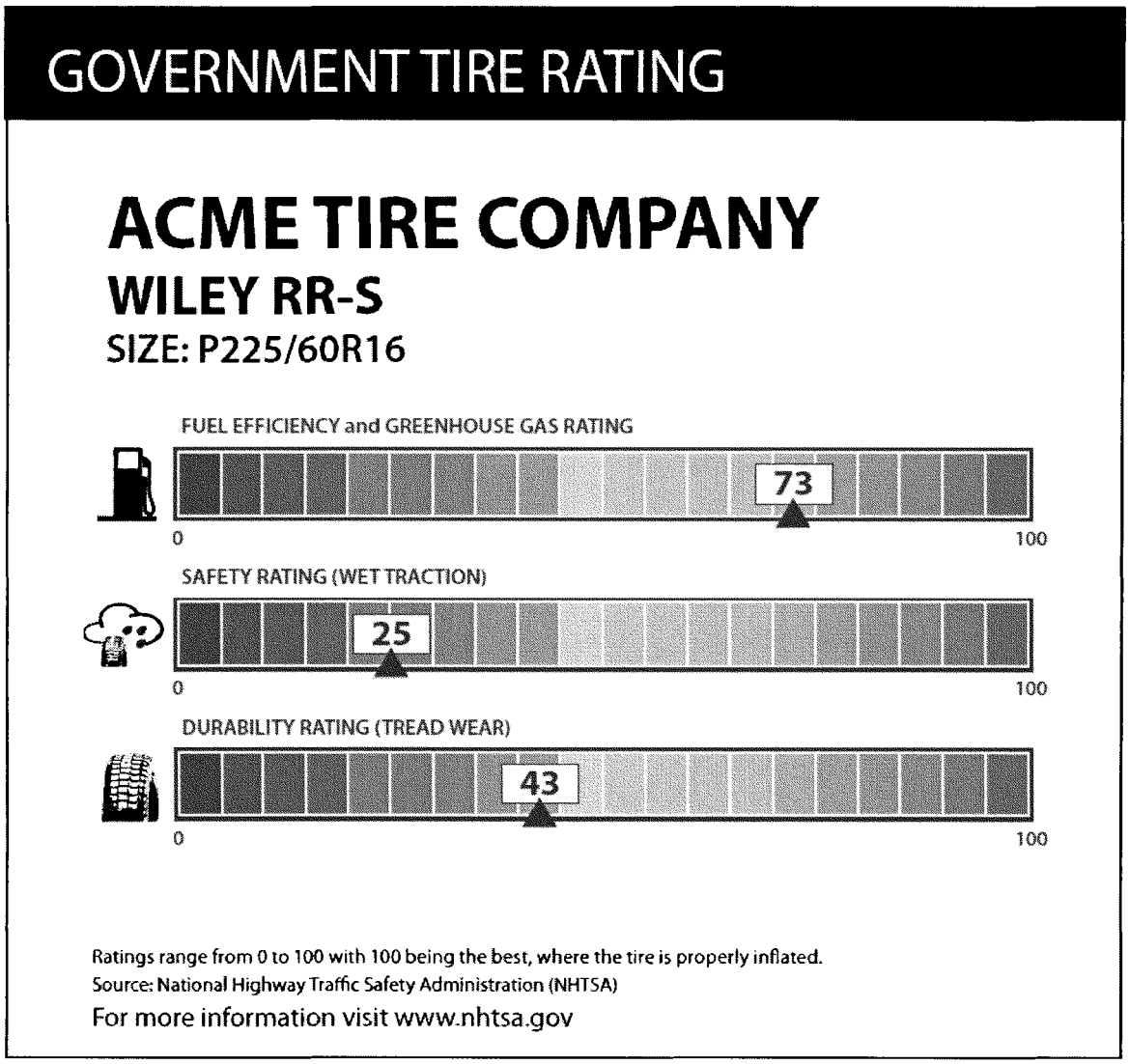

Figure 7. Proposed Label

[135] Manufacturers are required to print UTQGS information on a paper label pursuant to 49 CFR 575.104(d)(1)(B). Many manufacturers include other information on this paper label as well. Note that NHTSA uses the term ''paper label'' in the colloquial sense; many labels on tires are actually made of plastic.

[136] Color versions of Figures 8–12 will be placed in the docket and on NHTSA's Web site, *http://www.nhtsa.gov*.

ACME TIRE COMPANY

WILEY RR-S

SIZE: P225/60R16

Compare This Tire With Others Before You Buy.

Star ratings range from 1 to 5 stars (★★★★★) with 5 being the highest.
Source: National Highway Traffic Safety Administration (NHTSA)

Figure 8. Label A in NHTSA Consumer Research

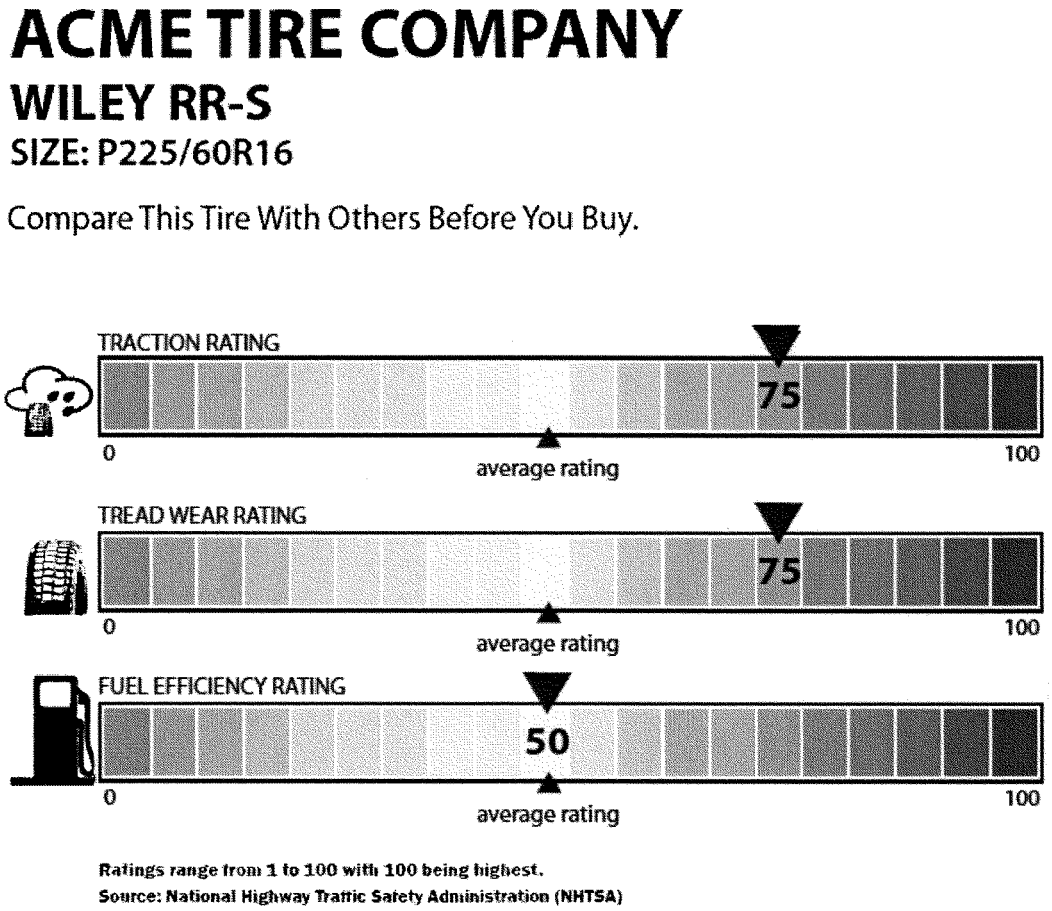

Figure 9. Label B in NHTSA's Consumer Research

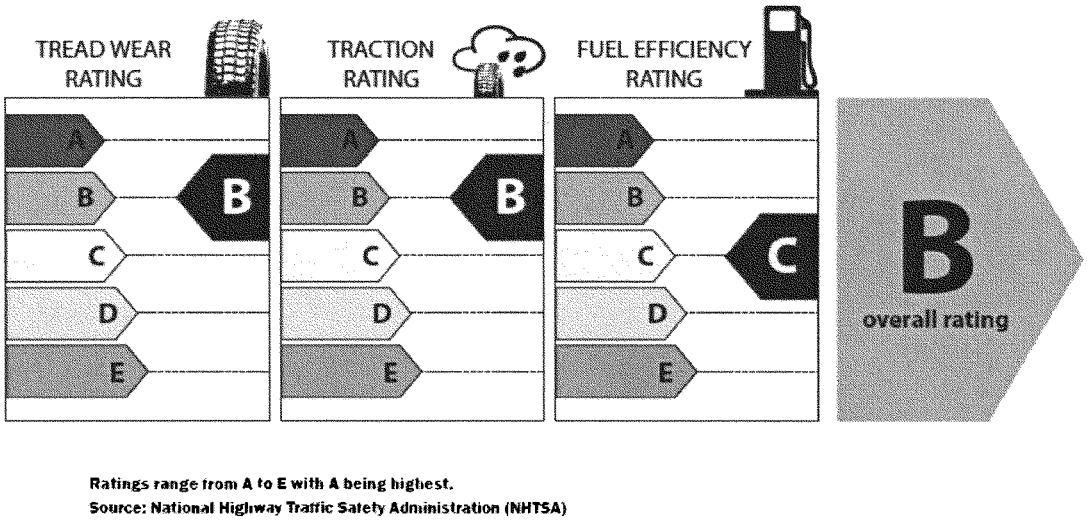

Figure 10. Label C in NHTSA's Consumer Research

ACME TIRE COMPANY

WILEY RR-S

SIZE: P225/60R16

Compare This Tire With Others Before You Buy.

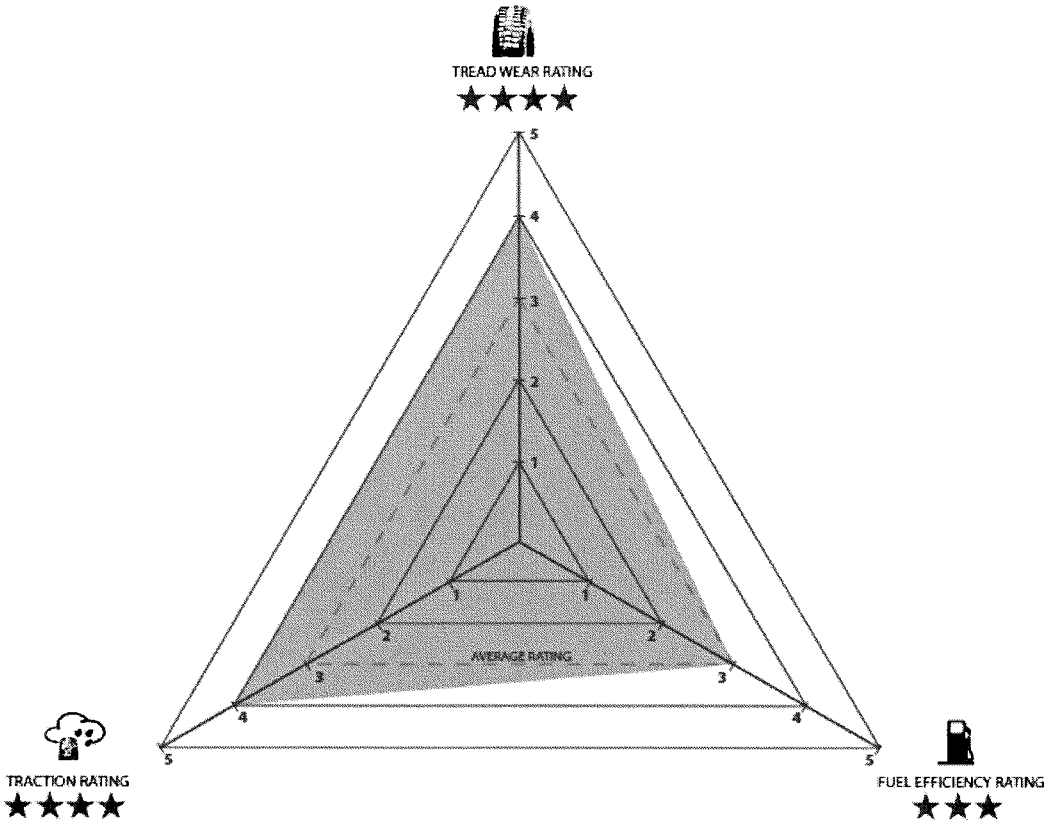

Star ratings range from 1 to 5 stars (★★★★★) with 5 being the highest.

Read the label as 1 being the lowest rating and 5 being the highest rating. The closer the shaded area is to the outside of the triangle, the higher its rating for the data point.

Source: National Highway Traffic Safety Administration (NHTSA)

Figure 11. Label D in NHTSA's Consumer Research

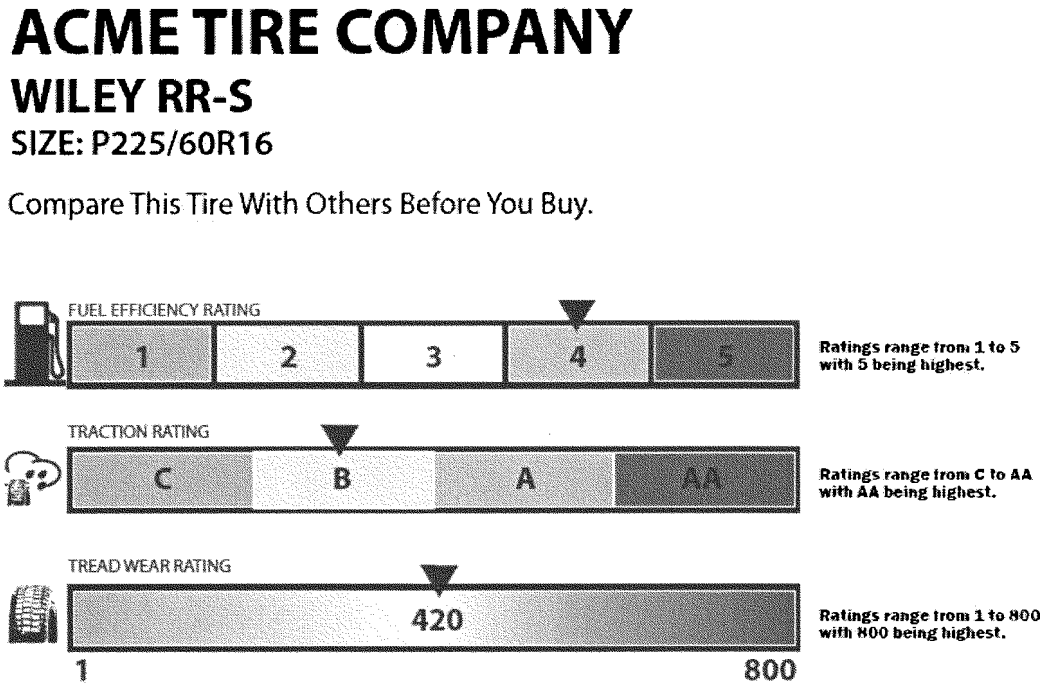

Figure 12. Label E in NHTSA's Consumer Research

NHTSA is proposing that the rating scales be oriented horizontally, that the scales be shaded red (0) to green (100), and that each scale be marked by an icon in addition to the title, similar to Label B shown to the focus groups (Figure 9). This label design was the clearly preferred concept. Participants intuitively understood that red was poor and green was good and liked this color scheme. The vertically-oriented label (Label C, illustrated in Figure 10) was difficult to understand for many participants in the focus groups.

NHTSA is proposing to modify the Label B as shown to consumers (Figure 9) as described here. *See* Figure 7. First, NHTSA is proposing to add a heading that reads, ''Government Tire Ratings,'' similar to the heading on the vehicle label that shows the new car assessment program (NCAP) ratings. The focus group participants indicated that they would prefer to know that it was a government program.

We are also proposing to have the fuel efficiency rating appear topmost on the label, followed by safety and durability. The ratings appeared in different order in the designs shown and participants did not express a preference. NHTSA has chosen to place fuel efficiency on top as that is the emphasis of EISA, however we request comment on the order of ratings. Participants did indicate that safety would be a more important consideration in their purchase decision, so the agency seeks comment on this rating appearing at the top.

Further, we are proposing to change the labels on the rating scales to read as follows: ''Fuel Efficiency and Greenhouse Gas Rating,'' ''Safety (Wet Traction),'' and ''Durability (Treadwear).'' This language more closely mirrors the language in EISA. The agency is proposing that ''Greenhouse Gas Rating'' appear on the fuel efficiency rating scale because section 105 of EISA mandates a consumer information program that will establish a rating system reflecting the fuel economy and greenhouse gas emissions over the life of automobiles.[137] For consistency across fuel economy-related consumer information programs, we are proposing that the fuel efficiency rating in the tire fuel efficiency consumer information program indicate that fuel efficiency ratings also signify relative performance in terms of greenhouse gas emissions.

As for the safety and durability rating scale labels, NHTSA is aware that safety and durability can refer to more characteristics than those rated in the program we are proposing today, and therefore has included ''wet traction'' and ''treadwear'' to clarify what is being rated on the safety and durability scales.

The agency is also proposing to change the language at the bottom of the label by replacing the word ''highest'' with the word ''best.'' This is to because the data behind the rating is not uniformly ''higher'' when the rating improves. While this would not be apparent to all consumers, some may wish to research the data behind the rating and this language would more accurately reflect the data.

NHTSA is proposing to include an additional sentence at the bottom of the label indicating where consumers should go to learn more about the information: ''For more information visit *http://www.nhtsa.gov.''* This sentence appears more prominent than the other reference sentences at the bottom of the label because the agency seeks to encourage consumers to learn about the ratings, which they can do most completely on NHTSA's Web site. The Web address could be replaced if the new tire information Web site NHTSA intends to develop has a simple domain name.

NHTSA is proposing to place the rating on each scale in a white box, as opposed to within one of the colored shaded boxes comprising the scale. This allows the rating score to be printed in slightly larger text than if it were limited to inside each box. Placing each rating in a white box also allows the rating to appear in a more accurate location on the scale, as opposed to being limited to appearing within a shaded box. NHTSA is further proposing to move the arrows pointing to the score to the bottom of each rating scale, as opposed to the top. This is to avoid potentially obscuring the rating scale titles with the arrow on

[137] *See* 49 U.S.C. 32908(g).

the top of the scale pointing to a lower rated tire.

NHTSA is also proposing a minimum font size of 14 point for the heading on the label, and 12 point for the labels on each of the rating scales. NHTSA is also proposing to require the label to be at least 4.5 inches high by 5.5 inches wide. The agency tentatively concludes that this is approximately the smallest size the label could be and still be legible. This is slightly larger than the Stars on Cars label required on vehicles. NHTSA requests comments on these size requirements for the label.

Finally, NHTSA is proposing to delete the indication of ''average rating.'' Without having a complete database of all tires, NHTSA is not sure where the ''average rating'' would be located on each scale. In addition, it is likely that these would not be in the same location on each of the three scales, and focus group participants expressed some confusion with designs like this.

Participants in the focus groups generally liked the icons used on the sample labels, however the icon used for the traction rating was found confusing by many. The cloud in the symbol for traction (representing the source of the rain drops) was confusing for some consumers who could not make out what it was or thought it was a cowboy hat. NHTSA considered other ideas, such as those shown in Figure 13. NHTSA is not currently proposing a different icon than that which was tested. However, NHTSA plans to conduct further consumer testing prior to the final rule and is seeking comment on these and any other ideas regarding possible changes to the traction icon, which indicates ''wet'' traction.

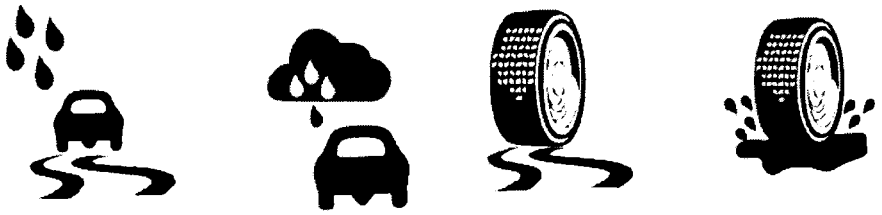

Figure 13. Alternate Traction Icons

NHTSA is further seeking comment on using some icon or mark on the labels to help consumers at a glance identify the most fuel efficient tire. NHTSA has designed the scales so that the highest rating for tires in the databases we have examined for each category would be in the 80s. A mark indicating, for example, the top 25% of ratings could let consumers know that they are already looking at a best-rated tire. The mark could be associated with just the fuel efficiency rating or the tire might only receive the mark if it also has a minimum certain safety and durability rating. This is similar to the idea behind the Energy Star program. The Energy Star program is a voluntary joint EPA and DOE program to rate the energy-efficiency of household products.[138] For each product included in the program, there are performance standards to determine whether or not the product qualifies for an Energy Star designation. As an initial matter, NHTSA is concerned that such a mark might be inaccurately perceived by the consumer as indicating an overall tire rating, which might indicate government approval of the safety of that replacement tire. We request comment on this idea.

NHTSA is also requesting comment on whether or not the ratings label should include a caution that the ratings apply only to properly inflated and/or new tires. Both of these messages would be part of the consumer education program to promote this program.

Last, NHTSA is requesting comment on including a statement like ''made in week xx of year yy,'' where the ''xx'' and ''yy'' would be the numerals from the tire identification number (TIN). NHTSA receives a lot of complaints about the TIN and consumer difficulty in understanding how to read it. Focus group participants also indicated that date of manufacture was additional information they would like to have. NHTSA requests comments on the effect of requiring this information on the paper label.

VII. Proposed Information Dissemination and Reporting Requirements for Tire Manufacturers and Tire Retailers

A. The Replacement Passenger Car Tire Market

Most replacement tires are designed to perform on the wide range of vehicles in the fleet, including vehicle models dating back many years. Thus, suppliers competing in the replacement market must offer a wide variety of tire types and sizes.[139] In addition, the spectrum of replacement tire sizes and types is continually expanding. At any one time, replacement tires from hundreds of brands and lines are for sale in the marketplace, which consists of tens of thousands of individual products, or stock-keeping units (SKUs), when size variability is taken into account. Consumers may choose among a handful to several dozen tire lines for their replacement needs.[140]

Consumers may choose from national Internet and mail order companies to tire dealers, manufacturer outlets, and retail department stores. Typically, the tires bought in the replacement market are balanced and mounted by the tire dealer or retailer.[141] NHTSA is proposing a definition of ''tire retailer'' to be ''a person or business with whom a replacement passenger car tire manufacturer or brand name owner has a contractual, proprietary, or other legal relationship, or a person or business who has such a relationship with a distributor of the replacement passenger car tire manufacturer or brand name owner concerning the tire in question.'' *See* section XIII (Regulatory Text) of this notice. NHTSA seeks comment on the appropriateness and inclusiveness of this definition.

B. Assumptions About the Average Tire Purchaser and the Average Tire Purchasing Process

NHTSA's consumer research focus groups revealed some common themes in consumers' tire purchasing processes, which are discussed in detail below. Additionally, on November 17, 2008 NHTSA participated in a roundtable discussion convened by the Energy Efficiency Center at the University of California, Davis (''UC Davis

[138] *See http://www.energystar.gov/.*

[139] 2006 NAS Report, *supra* note 4, at 21.

[140] *Id.*

[141] *Id.*

workshop'') [142] to discuss the tire purchase process. Participants included State and Federal government agencies, tire manufacturers, tire retailers and universities. Both these sources of information have enabled the agency to make some assumptions regarding the average tire purchaser and the average tire purchasing process. These assumptions have led the agency to draw tentative conclusions regarding the most effective ways to ensure consumers have access to easy-to-understand information. These assumptions form the basis of our proposals regarding requirements for information dissemination and reporting requirements for tire manufacturers and for tire retailers. NHTSA requests comment on how to best communicate information to consumers before or during the tire purchasing process.

NHTSA's consumer research and the discussions at the UC Davis workshop revealed that many consumers make their choice of tire at the location of purchase with guidance from a sales associate. NHTSA's consumer research indicated, however, that many tire consumers do conduct research to determine specifications for their vehicle, and then visit a store or go online to compare tires of different specifications. Participants in the UC Davis workshop noted that many tire purchases are unplanned, where consumers needed to take immediate action to restore their vehicle. Consumers in NHTSA's focus group research made a distinction between buying replacement tires and buying tires because of an urgent need, *e.g.,* a flat tire. These consumers agreed that in the latter scenario, many steps that they may have undertaken before a planned purchase, *e.g.,* doing comprehensive research, were bypassed with the goal of getting a new tire in their price range immediately. UC Davis workshop participants, among them many tire retailers and tire manufacturers, further agreed that while some consumers do ''defensive'' research prior to scheduled or planned tire purchases in an attempt to avoid getting taken advantage of by sales associates, very few do ''offensive'' research such that they know precisely what tires they want.

NHTSA's consumer research found that the connection between fuel efficiency and tire selection was not brought up unaided. Even when prompted, many participants in the research did not feel there was a strong connection between the two. A few participants understood that inflated tires are safe, making the causal relationship between tire inflation and vehicle safety, which is understood by most. But after discussion and probing, more participants began to understand the connection and agreed tires impact fuel efficiency. While NHTSA's consumer research indicated that consumers are interested in the prospect of a rating system that would enable them to compare fuel efficiency of different tires, participants in the UC Davis workshop, which included tire retailers, tire manufacturers, and government organizations, generally agreed that price is the largest factor in most consumers' final tire purchasing decision.

C. What Are We Proposing To Require of Tire Retailers?

Based on NHTSA's understanding of the average tire purchaser and on the tire purchasing process generally, we believe that the most successful method of encouraging consumers to consider the new ratings at the point of sale is to have a poster in each tire retailer/dealer location that would be visible to consumers, to make consumers aware that there are comparative government tire ratings available for the passenger car tires they are considering. The poster would communicate the importance of comparing replacement tire ratings as well as the importance of proper tire maintenance.

Therefore, in today's notice we are proposing to require that tire retailers who have a display room, *i.e.,* those that present sample tires offered for sale to consumers, display a tire fuel efficiency consumer information program poster that NHTSA will print and provide to retailers. Some of the principles NHTSA is proposing be conveyed by the poster are:

- Your choice of tires you buy to put on your vehicle affects:
  - The gas mileage your vehicle will get,
  - The traction and other safety characteristics your vehicle can achieve, and
  - How long you can reasonably expect it will be before you'll have to buy another new set of tires.
- There is a new government program that requires new tires for cars, vans, and SUVs to have a paper label on the tire tread to show you the tire's rating for fuel efficiency, safety, and durability.
- Ask your dealer for the ratings for the tires you are considering for your vehicle.
- More information about this ratings program and a complete listing of the ratings for all these tires is available at *http://www.nhtsa.gov.*
- Whatever tire you choose, you need to keep it properly inflated to get the best fuel efficiency, safety, and tire life that the tire can deliver.

NHTSA seeks comment on these messages and solicits suggestions for poster design and the best means to convey information about the rating system and elicit interest in the ratings, keeping in mind the ultimate goal of assisting consumers in making more educated tire purchasing decisions.

The agency is proposing to make this poster available within 12 months of the issuance of a final regulation. At that time NHTSA will publish a **Federal Register** notice announcing the availability of the poster. We are proposing that a tire retailer will be able to comply with the requirement of displaying the poster either by downloading and printing it, in color and with the specifications from NHTSA's Web site, or by contacting the agency and requesting that we send the retailer a copy of the poster.

We are also proposing to require that tire retailers leave the paper label which displays the tire fuel efficiency rating graphic on the tire until the tire is sold.[143] This requirement would maximize the chance that consumers would see the label for the tire they are purchasing. NHTSA recognizes that at many tire retailers, the tires are mounted by the retailer itself and the consumer may never actually see the tires they purchase before they are on their vehicle. We are not proposing to require that tire retailers must show consumers the label for the tire they are going to purchase, but merely that the label is kept on the tire until sale. The agency would not hold a tire retailer responsible for accidental damage or delamination of a label, or for a manufacturer's failure to provide a label.

NHTSA is aware of the small business nature of many tire retailers and is sensitive to any burdens being placed upon tire retailers and dealers. The agency considered requirements that tire retailers show consumers the ratings for each tire that is available and being compared for potential purchase. However, the agency has tentatively concluded that the burdens associated with such requirements are not needed to implement an effective program. The agency seeks comments on any other

[142] The agenda and presentations from the roundtable can be seen at *http://eec1.ucdavis.edu/programs/transportation/tire-roundtable-nov-2008/tiresroundtable* (last accessed Mar. 6, 2009).

[143] *Note* that NHTSA uses the term ''paper label'' in the colloquial sense; many labels on tires are actually made of plastic.

information dissemination requirements that would ensure that easy-to-understand information is conveyed in a way that is most likely to impact consumers' decisions and, thus, affect their behavior and save them and our nation fuel and money.

D. What Are We Proposing To Require of Tire Manufacturers?

1. Data Reporting

We are proposing to require manufacturers to report to NHTSA for each tire that is individually rated under this tire fuel efficiency consumer information program the following data:

- Rolling resistance force (RRF), as computed from the ISO 28580 test (in Newtons) and followed in parenthesis by the equivalent pounds-force, *e.g.,* 5 Newtons (1.12 lbf).[144]
- Test load, as specified in the ISO 28580 test procedure (in Newtons) and followed in parenthesis by the equivalent pounds-force, *e.g.,* 5 Newtons (1.12 lbf).
- Rolling resistance rating (0–100), based on the formula in section VI.B.1 above.
- Traction 0–100 rating, based on the formula in section VI.B.1 above.
- Average peak coefficient of friction for asphalt, as measured during the UTQGS traction test procedure (49 CFR 575.104(f)).
- Average peak coefficient of friction for concrete, as measured during the UTQGS traction test procedure (49 CFR 575.104(f)).
- Adjusted peak coefficient of friction for asphalt (μ_{APA}), based on the formula in section VI.B.1 above.
- Adjusted peak coefficient of friction for concrete (μ_{APC}), based on the formula in section VI.B.1 above.
- Treadwear 0–100 rating, based on the formula in section VI.B.1 above.
- Wear rate of tested tire, as measured during the UTQGS treadwear procedure (49 CFR 575.104(e)).

There are several reasons NHTSA is proposing that the tire manufacturer submit these various measurements to the agency. First, this makes it straightforward for the agency to ensure compliance with the rating systems developed in this tire fuel efficiency consumer information program. These reporting requirements also permit the agency to assess the adequacy and appropriateness of the tolerance bands, as described in section XI of this notice. Additionally, NHTSA can use the force measurements to develop an accurate rolling resistance database that can be used for development of a calculator that consumers can use to estimate dollars of fuel saved either annually or over the average life of the tire, as explained in section VIII of this notice. Finally, the test load can be used to calculate rolling resistance coefficient if necessary or desirable.

We are proposing to require manufacturers to report to NHTSA the treadwear rating and the traction rating for each tire, on a 0 to 100 scale as discussed above in sections VI.A.2 and VI.A.3 because these ratings represent durability and safety for purposes of the national tire fuel efficiency consumer information program required by EISA. The agency is proposing that these ratings be based on the UTQGS test procedures for traction and treadwear. However, the agency remains open to considering other tests that may better represent and communicate information about safety and durability. As mentioned above, NHTSA requests comments on other test methods and metrics on which to base ratings of safety and durability.

We request comment on what format to require tire manufacturers to submit data. NHTSA intends to require submission of data in a uniform format to ensure that all information is provided, and for ease of database entry. NHTSA is proposing that the agency will design a Microsoft Excel template for data submission and will make this template available for download from the agency Web site. However, the agency is also looking into using an online data submission system and the possibility of creating one centralized location where tire manufacturers will submit all required data submissions, including tire fuel economy data submissions. The agency seeks comment on the feasibility of using both a spreadsheet template and an online data reporting system for having tire manufactures submit data for the fuel efficiency consumer information program ratings.

2. Tire Labels

We are also proposing two alternatives for tire manufacturers to present the required rating information on a paper label affixed to each subject replacement tire. First, a tire manufacturer may place the required rating graphic somewhere on the paper labels already required to be affixed to each individual tire by UTQGS requirements.[145] Second, a tire manufacturer could fulfill the tire fuel efficiency labeling requirements by affixing a separate paper label with just the tire fuel efficiency label graphic on it.

Regardless of which alternative is chosen by the tire manufacturer, we are proposing to specify a minimum size for the tire fuel efficiency rating system graphic (4.5 inches high and 5.5 inches wide) and that the graphic must be in color on the label.

The minimum size specification is proposed to ensure that the rating graphic will be legible on the label. The reason that we are proposing the graphic appear in color is because consumers reacted positively to the red shading on the lower/left side of the scale to indicate lower ratings, and to the green shading on the higher/right side of the scale to indicate higher ratings.

NHTSA requests comments on whether the label requirement should be more specific regarding precisely when tire manufacturers must affix the label.

E. Requirements for Tire Retailers and Tire Manufacturers With an Internet Presence

There are tire retailers with virtual storefronts, as well as retailers and manufacturers that maintain Web sites that consumers can use to research tires. Because NHTSA believes that many consumers use the Internet to do at least a minimal amount of research in some situations before they need to purchase tires, we are proposing to require that tire retailers and tire manufacturers that maintain Web sites must include a link to the comprehensive tire Web site that NHTSA plans to develop (*see* section VIII.B.4 below).

NHTSA requests comments on what additional requirements, if any, should apply to such Web sites. For example, should NHTSA require the Web site to include an electronic version of the poster NHTSA is proposing to require retailers with a display room to display? The poster would be provided in an electronic format by NHTSA when printed copies are provided as discussed above.

F. Uniform Tire Quality Grading Standards

As mentioned above, NHTSA has a tire rating system that has been in place since 1975, the uniform tire quality grading standards (UTQGS).[146] NHTSA established the UTQGS to fulfill a statutory requirement established by the National Traffic and Motor Vehicle

[144] While pounds-force (lbf) have been used throughout this NPRM since they are more familiar to the average U.S. consumer, the SI units of Newtons will be the official reporting unit. All proposed limits and values will be converted accordingly.

[145] *See* 49 CFR 575.104(d)(i)(B).

[146] *See* 49 CFR 575.104 (2008).

Safety Act of 1966.[147] This statutory requirement has been codified and amended to read as follows:

> The Secretary shall prescribe through standards a uniform quality grading system for motor vehicle tires to help consumers make an informed choice when purchasing tires. The Secretary also shall cooperate with industry and the Federal Trade Commission to the greatest extent practicable to eliminate deceptive and confusing tire nomenclature and marketing practices. A tire standard or regulation prescribed under this chapter supersedes an order or administrative interpretation of the Commission.[148]

The UTQGS, applicable to passenger car tires, require motor vehicle and tire manufacturers to provide consumers with information about their tires' relative performance regarding treadwear, traction, and temperature resistance. Manufacturers are required to rate their tires based on performance in specified test procedures, to report those ratings to NHTSA, to permanently mold those ratings onto sidewalls, to attach a label containing those ratings on replacement tires, and to provide information about the UTQGS with tires and new motor vehicles. The treadwear, traction, and temperature resistance characteristics were chosen by NHTSA for rating under the UTQGS because the agency believed they provided the best balance of tire properties for meaningful evaluation by consumers. As previously discussed for the characteristics affected by today's proposals, those characteristics interact with each other such that improvement of one of them could reduce performance of one of the others.

As NHTSA is proposing to base today's proposed safety and durability ratings on them, traction and treadwear were discussed above. The UTQGS temperature rating indicates the tire's resistance to the generation of heat and its ability to dissipate heat. Sustained high temperature can cause the material of the tire to degrade and reduce tire life, and excessive temperature can lead to sudden tire failure. Tires are tested under controlled conditions on a high-speed laboratory test wheel. Tires are graded A, B, or C, with A indicating an ability to dissipate heat at higher speeds. While grade C originally corresponded to a level of performance required for passenger car tires by FMVSS No. 109, new requirements in FMVSS No. 139 mean that few, if any, new tires perform below the level of grade B.[149]

In 1995, NHTSA proposed amendments to the UTQGS.[150] At that time, NHTSA proposed, based on comments from the public,[151] to remove the temperature resistance rating and to add a fuel efficiency rating. It was believed that the temperature resistance rating was not as well understood by consumers as the treadwear and traction ratings.[152] The rulemaking was terminated [153] because Congress placed a condition in NHTSA's 1996 appropriations Act that stated ''none of the funds appropriated by this Act may be obligated or expended to plan, finalize, or implement any rulemaking to add to [the UTQGS] any requirement pertaining to a grading standard that is different from the three grading standards (treadwear, traction, and temperature resistance) already in effect.'' [154] This language has been included in every DOT Appropriations Act since 1996.

In developing today's proposal under EISA, the agency considered the need and appropriateness of continuing the current UTQGS requirements. For the reasons discussed below, we have tentatively concluded that the current UTQGS requirements should either be removed, once tires meet the new EISA requirements, or amended to conform to the approach in today's EISA proposal.

For two of the three UTQGS ratings, today's proposal would establish parallel but different ratings. Thus, consumers would be receiving the same basic information, but in two different ways. For the treadwear rating, the durability rating proposed in this notice is simply a different way of expressing the same rating. For the traction rating, the safety rating proposed in this notice is based on the same test procedure; however, the ratings are based on different measurements, both of which are recorded by the equipment used in the UTQGS test procedure.

If the agency maintained the current UTQGS ratings in these areas, there would be concerns about consumer confusion as well as unnecessary duplication. For example, with both systems in place, a consumer would see one scale (*e.g.,* letter grades for traction) on the UTQGS label and on the tire sidewall, but on the tire fuel efficiency label the consumer would see a safety (*i.e.,* traction) rating on a different scale (0 to 100). Similarly, the consumer would get a treadwear grade on the UTQGS label and on the tire sidewall, but would get the same grade expressed on a different scale (0 to 100) on the tire fuel efficiency label.

As to the third UTQGS rating, *i.e.,* temperature resistance, NHTSA notes that 80 percent of current tires are graded either A or B. As discussed previously, the new performance standards for passenger car tires will result in only grade A or B tires in the market. Therefore, the rating does not provide much comparative information. Moreover, for reasons discussed in the 1995 NPRM,[155] we believe this rating has limited relevance to consumers.

Given the above discussion, we are requesting comments on two alternatives. Under the first alternative, the current UTQGS requirements would be removed once tires meet the new EISA requirements. While the new requirements we are proposing today would be issued under the authority of EISA, we believe the ratings system proposed in this document for durability (treadwear) and safety (wet traction) serve the same purposes as the corresponding existing UTQGS ratings.

We note that, unlike the current UTQGS requirements, manufacturers would not be required to permanently mold the EISA ratings onto tire sidewalls or provide information for tires on new motor vehicles. However, we have tentatively concluded that, given the purposes of both UTQGS and the EISA ratings, *i.e.,* helping consumers make informed choices in purchasing tires, and the ways that the relevant information would be available (including the paper label on replacement tires and a government Web site), these differences would not be a reason to maintain the current UTQGS requirements.

Under the second alternative, the current UTQGS requirements would be amended to conform to the approach in today's EISA proposal. We would replace the existing UTQGS treadwear and traction ratings with the ratings proposed in today's notice for durability (treadwear) and safety (wet traction), and the rating for temperature resistance would be removed. The requirement for UTQGS information to be provided on a tire tread surface label would be

[147] *See* National Traffic and Motor Vehicle Safety Act of 1966, Public Law 89–563, § 203, 80 Stat. 718 (1966) (codified as amended at 49 U.S.C. 30123(b)).

[148] 49 U.S.C. 30123(b).

[149] UTQGS requires tires to be rated a C if they perform at the lowest level in the UTQGS test. If a tire performs at a higher level the manufacturer *may* rate the tire a B. Therefore, while there may still be grade C tires on the market, NHTSA expects that the tires could be rated a B, based on the requirements of FMVSS 139.

[150] 60 FR 27472 (May 24, 1995).

[151] *See* Request for Comments, 59 FR 19686 (Apr. 25, 1994).

[152] *Id.* at 19689.

[153] *See* 61 FR 47437 (Sept. 9, 1996).

[154] Department of Transportation and Related Agencies Appropriations Act for Fiscal Year 1996, Public Law 104–50, 109 Stat. 436 (1995).

[155] *See* 60 FR 27472, 27478–27481.

written broadly enough that if the ratings were provided on the EISA label they need not be provided on a separate UTQGS label. Under this alternative, we would also remove the requirement for the UTQGS ratings to be molded on the tire sidewalls. We believe this requirement is duplicative and results in unnecessary costs. For replacement tires, the ratings would be provided on the paper label. While we question whether there is a need to provide this information for the tires on new vehicles, we request comments on this issue. We also request comments on the most appropriate way to require the information to be provided, should we decide to continue to do so. Finally, as part of this alternative, we would make any necessary conforming changes to the other UTQGS requirements.

We note that our proposed regulatory text does not include changes with respect to removing or revising the current UTQGS requirements. If this part of the proposal is adopted as a final rule, we would make the necessary changes in the final rule's regulatory text.

In developing this aspect of our proposal, we have specifically considered 49 U.S.C. 30123(b) (the statutory requirements concerning UTQGS), 49 U.S.C. 32304A (Consumer Tire Information, *i.e.,* the relevant part of EISA), and the current DOT Appropriations Act. As to the language of the DOT Appropriations Act, discussed earlier, we construe that language to prohibit us from adding to the UTQGS program any new grading standards beyond those currently in effect (treadwear, traction, and temperature resistance), but not from removing current standards or making minor modifications in the current standards, such as those discussed above under the second alternative. We note that the fuel efficiency rating proposed by today's document would be issued solely under the authority of EISA, *i.e.,* it would not be part of the UTQGS program under any of the alternatives we are considering.

VIII. NHTSA's Consumer Education Program

As noted elsewhere in the notice, section 111 of EISA requires that the tire fuel efficiency consumer information program for replacement tires include ''a national tire maintenance consumer education program including, information on tire inflation pressure, alignment, rotation, and treadwear to maximize fuel efficiency, safety, and durability of replacement tires.'' 49 U.S.C. 32304A(a)(2)(D). In order to develop the most effective communication materials to comply with this requirement, the agency conducted consumer testing in January 2009 on informational materials and potential tire labeling.[156] The goals of this research were to (1) explore reactions to consumer expectations for a tire fuel efficiency rating program; (2) measure feedback related to the effectiveness of the communication materials used to convey the tire labeling information; and (3) gauge consumer preferences of tire label designs presented to determine how best to design a consumer friendly label for the program. Consumers have expressed interest in ways this new information should be conveyed.

NHTSA is using consumer testing research to help maximize consumer understanding of the program and to develop communication materials to assist consumers in making more educated tire purchasing decisions. NHTSA requests comments on the most effective way to establish and implement a consumer education program to fulfill the statutory requirements and purposes behind today's proposed tire fuel efficiency consumer information program.

A. Previous Tire Consumer Education Efforts

NHTSA has long recognized the importance of consumer education in the area of tire maintenance. The Uniform Tire Quality Grading Standards (UTQGS) ratings, which are molded onto passenger car tire sidewalls, allow consumers to compare tire treadwear, traction performance, and temperature resistance. UTQGS consumer information includes a booklet published annually with comparative UTGQS ratings for all passenger car tires. NHTSA's consumer based Web site, Safercar.gov, features a tire lookup database with these comparative ratings to assist consumers in purchasing new or replacement vehicle tires.[157]

The *What's Your PSI?* campaign launched in 2005 challenged consumers to learn the correct pressure for their vehicle's tires and to help them maintain proper pressure. Campaign materials included a brochure distributed by tire safety partners throughout the country and interactive online tire quiz. These materials are available online through the Safercar.gov Web site.[158]

In 2008, NHTSA revised the *Tire Safety: Everything Rides On It* brochure, published in 2001. This brochure was published as a consumer information tool to inform vehicle owners of tire pressure, load limits, and maintenance. It is also a guidebook that helps consumers make informed decisions on tire repair and maintenance procedures.[159] The agency has partnered with industry and retail partners to distribute the brochure. Additionally in 2008, NHTSA urged drivers to check their tires during hot weather via a public service announcement (PSA). The PSA was featured on NHTSA.gov and Safercar.gov, warning of potential tire failure associated with under-inflation.

B. Potential Future Consumer Education Efforts

1. What Information Should NHTSA Convey?

In addition to the information dissemination requirements for tire manufacturers and tire retailers discussed above in section VII of this notice, NHTSA intends to actively communicate the importance of tire maintenance generally, including tire inflation pressure, alignment, rotation, and other tire issues.

All tires require proper inflation and maintenance to achieve their intended levels of efficiency, safety, wear, and operating performance.[160] NHTSA has previously addressed the importance of proper tire inflation to safety and fuel economy through PSAs. Additionally, in 2005, NHTSA published a final rule mandating tire pressure monitoring systems (TPMS) for all new automobiles by the 2008 model year.[161] TPMS, however, is no substitution for proper tire maintenance. Despite the fact that all new vehicles are equipped with a TPMS, NHTSA believes that proper tire maintenance is still the most important information to convey to consumers. Smaller reductions in inflation pressure than measured by the TPMS can affect not only fuel efficiency, but also tire lifespan and vehicle handling.

While past consumer information efforts have been effective in communicating the importance of tire safety and maintenance, the agency

[156] NHTSA Rolling Resistance Focus Group Report (January 2008). This report will be posted to the docket.

[157] *See http://www.safercar.gov/portal/site/safercar/menuitem.13dd5c887c7e1358fefe0a2f35a67789/?vgnextoid=9f4baa8c16e35110VgnVCM1000002fd17898RCRD.*

[158] *See http://www.safercar.gov/portal/site/safercar/menuitem.13dd5c887c7e1358fefe0a2f35a67789/?vgnextoid=eac9aa8c16e35110VgnVCM1000002fd17898RCRD.*

[159] *See http://www.nhtsa.dot.gov/cars/rules/tiresafety/ridesonit/tires_index.html.*

[160] 2006 NAS Report, *supra* note 4, at 5.

[161] *See* 70 FR 18136 (April 8, 2005).

plans to improve on these efforts by using innovative methods of dissemination for a new national tire fuel efficiency consumer information program. According to the agency's recent research, consumers reacted positively to receiving this information in the following ways: Point of sale, interactive mediums, and via the Internet.

2. Point of Sale

While NHTSA is partially addressing the presentation of consumer education information through the requirements for manufacturers and tire retailers proposed in today's notice, tire fuel efficiency rating information may additionally be displayed at kiosks, on overhead posters, tire plaques, or in advertisements at the point of purchase (everywhere tires are sold—tire retailers, dealers, online, manufacturer Web sites). These displays would highlight key information to be aware of and useful tips to note when shopping to buy replacement tires. NHTSA plans to develop informative posters and brochures that it will make available on its Web site for tire manufacturers and tire retailers to download and make available to educate consumers.

Moreover, as noted above, the agency plans to provide specific size and design requirements for a paper label with fuel efficiency, safety, and durability ratings to accompany each tire. A template would be supplied to tire manufacturers for their inclusion of these ratings on the label. A similar agency program, *Stars On Cars,* requires manufacturers to post vehicle crash test rating information on a vehicle's window sticker.

3. Interactive Mediums

NHTSA's consumer research shows that a calculator that would show the amount of fuel and money a driver would save by buying a higher rated fuel efficiency tire annually, or over the estimated lifetime of the tire, appeals to consumers. This calculator might be available online, at a dealership, or a tire retailer. Using the calculator, a consumer could select tires to compare, enter the fuel economy of their vehicle (mpg) and the average number of miles they drive each year and even the dollar amount they are paying for fuel and get a calculation of differences in fuel usage and/or money saved for the tires under comparison. In the example shown in Figure 14, gallons saved is calculated assuming Tire A provides the input gas consumption and Tire B provides the average gas savings per pound force found in the NHTSA study (~0.085% per pound).

Miles per gallon of Your Vehicle	25	
Miles per Year You Drive	10000	
	Tire A	Tire B
Efficiency Rating	50	60
Gallons per Year You Can Save		12

Figure 14. Example Calculation for Consumer Comparison

4. Web Site Development

The agency's Safercar.gov consumer Web site currently provides information on tire safety. Due to the amount of content available on tires, NHTSA plans to consolidate all tire information into a dedicated one-stop micro-site focusing on tires. The core message of the site would be tire maintenance—information on its importance in terms of safety, fuel efficiency, tire life and vehicle handling as well as tips on how best to maintain tires. The site would then make it easier for a consumer to locate various information regarding tires.

The new site would also be the location for all of NHTSA's information about tire fuel efficiency. From its new comprehensive tire Web site, NHTSA also plans to link to other government Web sites that discuss energy efficiency and consumer products and appliances, so that upon visiting the government's comprehensive tire Web site, consumers have the opportunity to learn about fuel efficient vehicles, energy saving practices, and the energy efficiency of other consumer products, as well as fuel efficient tires. These may include, but are not limited to, EPA's Green Vehicle Guide, *http://fueleconomy.gov,* and the government's Energy Star Web site.

NHTSA plans to develop a link to Frequently Asked Questions (FAQs) about the tire fuel efficiency rating system. Similar to the UTQGS tire lookup tool on Safercar.gov, NHTSA plans to develop a Web-based tire fuel efficiency search database, which would be a useful tool for consumers to compare tires prior to visiting a retailer.

The database would also be a site for retailers to obtain information to assist their customers. A dealer could satisfy the proposed requirements to have ratings information available when presenting comparative tire information by providing a computer kiosk linked to NHTSA's Web site for customers to use while in their store.

5. Paper Brochure Materials

NHTSA intends to publish a brochure to inform consumers about the tire fuel efficiency ratings program, where to obtain the ratings, as well as other related information. NHTSA would make this brochure available on its Web site for tire retailers who wish to print it and use it in their stores. The agency will also explore other avenues of distribution to inform future tire purchasers of the availability of this new information. Promoting awareness of this tire information will allow

consumers to spend time carrying out research prior to visiting a tire retailer.

6. Partnership Development

NHTSA will work with existing partners and identify new ones to help promote tire fuel efficiency campaign messages. NHTSA will seek to partner with any interested tire retailers, State or local governments, as well as manufacturers who share NHTSA's goal of promoting the importance of proper tire maintenance. NHTSA will also seek to partner with any interested universities or high schools who may wish to educate students regarding tire fuel efficiency or proper tire maintenance. Many high school and college students have used vehicles with replacement tires and, thus, they are definitely a target audience for consumer education regarding proper tire maintenance.

These partners will help to distribute those messages to a broader audience than the agency can do alone. These third-party relationships also build credibility and awareness among the media, which in turn helps expand reach. The agency will develop a toolkit that partners can use when packaging materials for consumer education efforts.

Further, EPA's SmartWay program has experience in transportation marketing and forming partnership programs.[162] EPA has experience with general public outreach and has reached out to NHTSA seeking to integrate NHTSA's tire fuel efficiency consumer information program with EPA's similar efforts in its SmartWay Transport program. NHTSA and EPA believe that a more integrated outreach effort from the Federal government will best assist consumers in educating themselves about tire maintenance and fuel efficiency, and thus in making more informed purchasing decisions.

7. Exhibits and Conferencing

NHTSA currently exhibits at a number of auto-related shows and conferences throughout the year. These shows provide an opportunity to distribute campaign materials and interface with consumers interested in vehicle safety information. NHTSA also gives consumers a walkthrough of agency Web sites to demonstrate how to find information. NHTSA will use these conference environments to promote the tire fuel efficiency consumer education program.

The agency also plans on looking into distributing educational flyers promoting NHTSA's tire education Web site to highly congested events where large amounts of people drive their vehicles to attend, such as professional sporting events.

8. Local Education Programs

NHTSA proposes to establish a line of communication with its regional and local offices and develop a plan that reaches out to the local universities and high schools in the States to deliver presentations made available by NHTSA officials. NHTSA plans to distribute educational material such as brochures and FAQs to each student body. The reason NHTSA wishes to reach out to university and high school students, is because the agency believes that this target audience highly uses replacement tires.

IX. Costs and Benefits

A. Costs [163]

There are three sets of costs involved for manufacturer: Costs to test tires to obtain rating information, costs of the consumer information and, assuming the program drives the market to demand different tires, costs to improve tires. Costs for the first two categories are estimated to be around $10.5 million annually, with one-time costs of around $4 million.

As discussed more thoroughly below under benefits, the costs for the third category are difficult to estimate. There are many different ways that a manufacturer might choose to improve the rolling resistance rating of their tires. The agency estimates that the increased cost at the consumer level of such improvements is $2.00 to $4.00 per tire for tires subject to this regulation if all other tire properties were held constant.[164] However, total costs for this category are dependent on market demand for different tires as a result of this program. The PRIA estimates that between 2 and 10 percent of the targeted tire population will be improved as a result of the proposal. Under this assumption and using a cost of $3 to improve the rolling resistance of one tire, the costs to improve tires are estimated to be between $8.4 and $42 million. The agency requests comments on this cost estimate.

Based on a report from Smithers Scientific Services, Inc. presented at the February 5, 2009 Staff Workshop for the California Energy Commission's Fuel Efficient Tire Program, there are 20,708 tires that would need to be tested initially to provide information. If each one of these were tested once for tire rolling resistance, the initial costs to the industry would be $3,727,000. Based upon the average number of reports the agency receives under the UTQGS program, the agency estimates that 125 new/redesigned tires will need to be tested annually, for ongoing testing costs of $22,500. Since the UTQGS already requires testing for treadwear and traction, those costs are already in the baseline and are not incremental costs of this proposal.

Information program costs include manufacturer costs to report information to NHTSA and to label tires. Tire manufacturers are required to provide information to NHTSA on the rating system. We are proposing to require manufacturers to report to NHTSA for each tire that is individually rated under this tire fuel efficiency consumer information program data on each of the three ratings: fuel efficiency, traction, and treadwear. In the early warning system (EWR) there are 28 tire manufacturers that report. Each manufacturer will need to set up the software in a computer program to combine the testing information, organize it for NHTSA's use, *etc.* We estimate this cost to be a one-time charge of about $10,000 per company. In the EWR analysis, we estimated the annual cost per report per tire manufacturer to be $287. There are also computer maintenance costs of keeping the data up to date, *etc.* as tests come in throughout the year. In the EWR analysis,[165] we estimated costs of $3,755 per year per company. Thus, the total annual cost is estimated to be $4,042 per company, and $280,000 + $113,176 = $393,176 for the first year and $113,176 as an annual cost for all 28 tire manufacturers.

The proposal also requires a color label to be added to the current label that is glued onto a tire. The label will have the three scales in color and other information. We estimate the incremental cost of adding the color label to the existing label to be $0.05 per tire. We assume it will not change the way the label is attached to the tire, so

[162] *See http://www.epa.gov/smartway/index.htm* (last accessed June 4, 2009).

[163] All costs discussed below are presented in 2008 economics.

[164] This is the cost to reduce rolling resistance by 10 percent from today's average replacement tire rolling resistance, holding other tire properties constant. Using silica is a well known method. There are a variety of ways to improve rolling resistance and not hold other properties constant, with different cost implications. That is one reason that the agency feels it is important to have rolling resistance, traction, and treadwear on the same label.

[165] Preliminary Regulatory Evaluation, Tread Act Amendments to Early Warning Reporting Regulation Part 579 and Defect and Noncompliance Part 573, August 2008, (Docket No. 2008–0169–0007.1).

will not result in additional labor at the tire manufacturer plant.

There are roughly 200 million replacement tires sold per year.[166] We estimate that 5 percent (10 million) of the replacement tires are LT tires, and therefore not covered by this proposal, and 4.5 percent (9 million) of the replacement tires are snow tires or other types of tires that are exempt from the consumer information program. Thus, the cost to provide consumer information on a label is estimated to be $9.05 million ($0.05*181 million).

For tire retailers, the agency estimates that this proposal would have no cost. The only proposed requirements for retailers are to leave the label on the tire until it is sold and to display a poster. Since manufacturers will supply the label, and NHTSA will supply the poster, there should be no cost to retailers.

There are three sets of costs to the government: Enforcement costs, costs for maintaining the Web site, and costs to provide the poster to retailers. NHTSA anticipates spending $730,000 annually to do compliance testing for this program. Based on costs for the existing areas of the NHTSA Web site, NHTSA estimates that it will cost approximately $550,000 per year to set up and update the part of the Web site to include information on 20,000 tires. For the poster, NHTSA currently provides a booklet to tire dealers with the UTQGS information. That booklet is on 8.5″ x 11″ paper and is 141 pages long. The printing costs are $3,190 per year. NHTSA anticipates that providing the posters would be a similar expense. Therefore, the combined costs to the government are estimated to be $1.28 million.

B. Benefits

There are three categories of *potential* benefits (or disbenefits) from this rule: Fuel economy, safety and durability. For each of these categories a significant unknown is likely consumer behavior in response to this program, and as a result of that, likely manufacturer reaction. For example, if consumers value fuel efficiency but are unwilling to increase the price they pay for tires, tires with improved fuel efficiency but decreased safety and/or durability may enter the market. If consumers care most about safety, and if there is a tradeoff between fuel economy and safety, one effect of this rule may be to increase safety while decreasing fuel economy. NHTSA would have to quantify the value of all three categories of benefits/disbenefits under such a scenario and construct a range of likely scenarios to calculate the combined potential benefits of this rule. Other scenarios can also be imagined. NHTSA requests comments on how it might more narrowly analyze the uncertainty regarding the anticipated outcomes of this proposal.

In addition to the unknown reactions of consumers and manufacturers, calculating benefits is complicated by several additional factors. We explain these additional complications for each of the three rating systems in the remainder of this section. In each of these discussions we consider how to compute the benefit of a difference of X points on the particular rating scale.

For fuel economy, one of the reasons the agency is basing the fuel efficiency rating on RRF rather than RRC is that it allows the program to readily provide consumers with a statement such as ''a difference of X on the fuel efficiency rating scale equates to Y gallons of fuel saved.'' To calculate benefits for an individual tire purchase, if the driver knows the baseline fuel economy of the vehicle the tires will be mounted on, the fuel efficiency rating of the existing tires, the fuel efficiency rating of the replacement tires, and the number of miles driven annually, the driver can calculate the reduction (or increase) in the number of gallons of fuel the driver will need to operate the vehicle for a year. By using fuel price forecasts, you can estimate the cost of that fuel, and make an economic decision about whether or not to buy those replacement tires.

To calculate fuel savings benefits for this rule, we would need to know how many consumers are likely to purchase lower (or higher) fuel efficiency rated tires as a result of the information in this program and the average reduction (or increase) in rolling resistance of the tires they purchase. The agency is planning to do additional consumer testing or other means to help it estimate the expected consumer reaction to this program. The PRIA develops hypothetical estimates assuming that between 2% and 10% of targeted tires are improved and that the average reduction in rolling resistance among improved tires is between 5% and 10%. Under these assumptions, the proposal is estimated to save between 7.9 and 78 million gallons of fuel and prevent the emission of 76,000–757,000 metric tons of CO_2 annually. The values of the fuel savings are between $22 million and $220 million at a 3 percent discount rate and between $20 million and $203 million at a 7 percent discount rate. The agency requests any information commenters may have about how to estimate consumer reaction and fuel savings.

Benefit estimates for the safety rating are more difficult to quantify. As noted, information is lacking about likely consumer responses to the proposed label. Even if such information were available, it is not as straight forward as it is for a fuel efficiency rating to develop a rule of thumb for the safety rating scale such as ''each difference of X on the safety rating scale equates to Y percent fewer crashes and Z dollars less in resultant economic damages.'' One possible way to do this would be to try and correlate a rating with a set stopping distance, and then estimate the reduction in crash injuries and fatalities resulting from a given reduction in stopping distance. The latter could be done by developing an injury probability profile for crashes as a function of impact speed (Delta-V) and measure the change in Delta-V that would occur when braking distance is changed. The agency has used this method to measure safety impacts in 2 previous rulemakings, those for Tire Pressure Monitoring Systems (TPMSs),[167] and for truck trailer braking improvements.[168]

However, these calculations are complicated by the fact that they depend on other factors (in addition to the traction rating of the tires) such as the handling characteristics of the vehicle on which they are mounted, the force with which the brakes are applied, and the loading of the vehicle. To put a tire's safety rating information on an economic scale, all of these characteristics would have to be assumed for all tires. But in reality, there is not a single vehicle that all replacement tires can be mounted on. We invite comments on these important issues, but we are concerned that the difference between two such tire safety ratings would not reflect the same economic difference in terms of safety, where the tires were mounted on two different types of vehicles. What we can communicate with the proposed rating is that tires with better traction ratings stop in less distance than tires with worse ratings. And as noted, the societal safety impacts depend on consumer and

[166] According to Modern Tire Dealer in 2008, there were 198 million replacement tires sold. *http://www.moderntiredealer.com/FAQ/.*

[167] Final Economic Assessment, Tire Pressure Monitoring System FMVSS No. 138, Office of Regulatory Analysis and Evaluation, Plans and Policy, National Highway Traffic Safety Administration, U.S. Department of Transportation, Washington, DC. (March, 2002), Docket No. NHTSA–2002–8572–0216.

[168] Final Regulatory Impact Analysis, FMVSS No. 121, Air Brake Systems Amending Stopping Distance, Office of Regulatory Analysis and Evaluation, National Center for Statistics and Analysis (Not Yet Published).

manufacturer reactions to the program. We seek comments on all of these questions.

For durability, the rating is a relative rating compared to a control tire, which would be rated 10 on our scale. A tire rated 20 should last twice as long as a tire rated a 10 and so forth. Several assumptions would need to be made to develop a rule of thumb for the durability rating scale of the form ''each difference of X on the durability rating scale equates to equates to a reduction of $Y in tire purchases over the lifetime of the vehicle.'' Tire lifetimes are complicated by factors such as: The vehicle the tire is mounted on, driving habits, tire maintenance, weather/environment/temperature, *etc.* NHTSA could however come up with a set scenario and come up with mileage estimates if the tires are driven as in that scenario. Drivers could translate that into a reduction in tire purchase costs over the lifetime of a vehicle given the price of the tires being considered—a $50 tire that is expected to last 10,000 miles would have the same expected lifetime cost (over the life of a vehicle) as a $100 tire that is expected to last 20,000 miles.

X. Lead time

While manufacturers currently calculate the rolling resistance of at least some tires for vehicle manufacturers to use when selecting which tires to equip new vehicles with, NHTSA believes that lead time is necessary for tire manufacturers to conduct additional testing and to prepare rating information for all affected tires. In addition, time will be necessary for NHTSA to collect all reported rating information into a database and to prepare consumer information materials.

On February 5, 2009, at a CEC staff workshop on their Fuel Efficient Tire Program, Smithers Scientific Services, Inc. (Smithers) presented the results of research done for the CEC to evaluate test facility capacity to conduct rolling resistance testing. Smithers based their analysis on current availability at independent laboratories, and also an estimate of test machine availability at manufacturer-owned laboratories. Depending on the scenario evaluated, they estimated that testing all affected tires would take 0.7 to 8.2 years.

NHTSA notes that Smithers' evaluation included some factors that are different from today's proposed Federal program. First, Smithers assumed that three tests would be required for each tire, while the program we are proposing today would only require a single test. Second, the proposal was based on estimates of both passenger car and light truck tires, while today's proposal only applies to passenger car tires.[169] Adjusting for these two factors, the Smithers data would suggest that manufacturers need 0.2 to 2.4 years to test one replacement passenger car tire of each different size specification, as proposed in this notice.

NHTSA believes this number may still be an over-estimate of the time needed to test and rate all tires affected by this proposed program. Based on our research, NHTSA estimates it may be possible that less than 25 percent of the affected tires will have to be tested in accordance with the ISO 28580 procedures in order to rate them for this program. It is likely that manufacturers will be able to develop equations to calculate the effect of differences in tread pattern, *etc.,* and use those equations to compute the test results from ISO 28580 from other tires that have been tested. Tire manufacturers will be able to extrapolate estimates of the test procedure values from knowing the test procedure values of similar sized tires. In addition, manufacturers already have rolling resistance information on many, if not all tires, as this information is used by vehicle manufacturers when choosing which tires to install as original equipment. Even if these data were gathered using other test methods, NHTSA's research shows that equations can translate the data to the test procedure specified in this rule. Recognizing that the deadlines imposed by Congress in EISA indicate a desire to have information available to consumers as quickly as possible, NHTSA is therefore proposing to require manufacturers to report on all existing tires within 12 months of the issuance of a final regulation.

For new tires introduced after the effective date of this rule, NHTSA is proposing to require reporting of information at least 30 days prior to introducing the tire for sale, as is required for UTQGS information.

Regarding the poster NHTSA is proposing to require in retailers that have a display room, the agency is proposing to make this poster available within 12 months of the issuance of a final regulation. At that time NHTSA will publish a **Federal Register** notice announcing the availability of the poster. The agency is proposing that a tire retailer must have the poster on display within 60 days of the issuance of the notice of availability in the **Federal Register**. We are proposing that a tire retailer will be able to comply with the requirement of displaying the poster either by downloading and printing it, in color and with the specifications from NHTSA's Web site, or by contacting the agency and requesting that we send the retailer a copy of the poster.

For tire retailers and tire manufacturers with an Internet presence, NHTSA is proposing that those Web sites link to NHTSA's tire Web site within 12 months of the issuance of a final regulation. NHTSA will provide the direct link to the comprehensive tire Web site in that final regulation.

XI. Compliance Tolerances

The test procedure proposed in this notice is the one NHTSA will use for compliance testing. Today's notice also proposes tolerances for RRF, traction, and treadwear which indicate what NHTSA is proposing to consider a noncompliance for the reporting and rating requirements if there is a difference between NHTSA's test result and a reported rating. In establishing tolerances, at this state of the rulemaking process, the agency has considered the repeatability of a tire tested as well as the variability of machine-to-machine tests, lab-to-lab tests, and the potential for different results due to different manufacturing dates.

For UTQGS, NHTSA specifies a test procedure for each rating. For traction and temperature resistance, the regulation then sets a performance level at which the tire must be rated a C, and higher levels at which the manufacturer may rate it a B, A, or in the case of Traction AA. The regulation was written this way as an acknowledgement of some level of necessary variability in the manufacture of tires. For tires that perform near a performance level that would allow a higher traction grade, the regulation allows the manufacturer to ''underrate'' to allow for the possibility that NHTSA might select a tire for compliance testing that would perform at the lower level.

For a consumer that purchases, for example, a B-rated tire and receives a tire that actually performs better than expected, there is no concern. However, there is some concern that a consumer may choose to pay extra for a B-rated tire when a comparable tire is ''underrated'' as a ''C.'' Thus, for the UTQGS definition of compliance, there is a risk that ratings information communicated will not be accurate.

Section 111 of EISA added a new sub-provision to 49 U.S.C. 32308 (General prohibitions, civil penalty, and enforcement) which provides for civil

[169] Smithers estimated that there were 62,124 passenger car tires and 9,888 light truck tires that would need to be tested.

penalties of not more than $50,000 for each violation of the tire fuel efficiency provisions. 49 U.S.C. 32308(c). Given this, in deciding how to define what would be considered a noncompliance for the tire fuel efficiency program, NHTSA tentatively has the concern that the program not result in a situation where NHTSA would be taking enforcement action against a manufacturer for the safety and durability ratings under this program, when enforcement action would not be warranted for UTQGS ratings based on the same test procedures. For this reason, NHTSA is proposing to require the ratings reported by a manufacturer under this proposed rule must be less than or equal to the rating determined by the agency using the procedures specified in this rule.

However, as discussed previously, NHTSA's research allows the agency to quantify the range of most of the variability that can be expected when determining the RRF value for a tire. Similarly, based on NHTSA experience conducting the traction and treadwear tests for the UTQGS program, NHTSA believes it can determine the range of variation for the safety and durability ratings proposed in this rule. NHTSA is requesting comments on a requirement which would require the ratings reported by a manufacturer to be within a specified tolerance limit as explained below for each rating. Because of the concern with the accuracy of the information being reported in this program, NHTSA is also seeking comment on whether to consider a non-compliance to exist when NHTSA's test value results in rating that is outside the tolerance band, but is higher than the rating reported by tire manufacturer.

A. Fuel Efficiency

For the fuel efficiency rating, the agency is proposing a tolerance for compliance purposes of plus and minus (±)5.5 percent of the rating set by the manufacturer. The agency bases this tolerance on an analysis of in-house test data to date, while considering the machine variability specification under ISO 28580, which is 0.05 Newtons per kiloNewton (N/kN) for RRC.

The agency selected a percentage tolerance because test data revealed that the variability of testing a tire increases as the load rating of the tire increases; this was found on multiple tests of the same tires. It was found that the variability for a passenger car tire with a mid-range load index had variability around the mean of ±0.66 pounds-force (lbf) which translated to 95 percent of the data being within ±5.5 percent of the mean. A similar analysis revealed that the same ±5.5 percent was an effective tolerance for the tires of lower and of higher load ranges, as well. So, a small tire tested repeated times would reveal small RRF variations, but within ±5.5 percent of the mean, and a large load range tire revealed larger RRF variations, but also within ±5.5 percent range of its respective mean.

So for compliance purposes, the agency is proposing that the RRF rating established by the manufacturer must be between ±5.5 percent of the RRF revealed from agency testing. The agency acknowledges that any RRF will be obtained from a tire that is different from the tire or tires that the manufacturer used to establish the reported RRF. In these cases, there will be new variability introduced into the compliance testing of a production tire from such factors as from machine-to-machine tests, lab-to-lab tests, different manufacturing dates, different batches of material, and possibly at different manufacturing plants. The agency does not have sufficient data to comprehensively establish tolerances considering these factors, so the agency solicits comments and proposals for a tolerance that considers these factors, and requests that wherever possible, supporting data is provided. The manufacturer will be required to submit to the agency the RRF and the rating for each tire.

B. Safety

The calculation of the safety (*i.e.,* traction) rating is discussed in detail in section VI.B.1 of this notice. For compliance purposes, the agency is proposing that the adjusted peak coefficient of friction for asphalt (μ_{APA}) and the adjusted peak coefficient of friction for concrete (μ_{APC}) must individually be between ±0.06 of the respective peak coefficients of friction revealed from agency testing. These proposed tolerances are based on agency test data wherein peak coefficients of friction for asphalt and concrete were recorded, and the average and standard deviation calculated for each.[170] The standard deviation was doubled and assigned a plus/minus tolerance to capture 95 percent of the data for the tested tires for each surface; the tolerance for the concrete was ±0.06, and the tolerance for the asphalt was also ±0.06.

The agency acknowledges that any adjusted peak coefficient of friction result will be obtained from a tire that is different from the tire or tires that the manufacturer used to establish the reported adjusted peak coefficient of friction. In these cases, there will be new variability introduced into the compliance testing of a production tire from such factors as from machine-to-machine tests, lab-to-lab tests, different manufacturing dates, different batches of material, and possibly at different manufacturing plants. The agency does not have sufficient data to comprehensively establish tolerances considering these factors, so the agency solicits comments and proposals for a tolerance that considers these factors, and requests that wherever possible, supporting data is provided.

The agency also considered another approach to the safety (*i.e.,* traction) rating calculation, and the agency solicits comment on this approach, as well. This approach would require the manufacturer to report to the values for both the peak and sliding (or locked-wheel) coefficients of friction for both concrete and asphalt for each separately rated tire. For each testing surface, the manufacturer will report the coefficient acquired on that surface and a rating that is calculated by dividing the average peak coefficient from the test tire by the average peak coefficients from the control tires, times 100. The data would be weighted based on the sequence of the test (candidate) tires (T) and control (standard) tires (C). For example if the test order was C1–T1–T2–C2, then the value used in obtaining the rating for the first test tire would be T1/(⅔ C1 + ⅓C2) and for the other test tire T2/(⅓ C1 + ⅔C2), each multiplied by 100. This gives a value based on the relationship of the test tire and the control tires that ran with it. This rating (one for asphalt and one for concrete) would be added together and normalized on a 1 to 100 scale for the final safety rating.

C. Durability

As explained above in section VI.B.1, NHTSA is proposing calculating a durability (*i.e.,* treadwear) rating by taking the UTQGS treadwear rating (as specified in 49 CFR 575.104), and dividing by 10. For compliance testing, the agency is proposing a tolerance on the UTQGS wear rate of the tire of ±2.5 mils per 1,000 miles as defined in 49 CFR 575.104(e).

The agency proposes this compliance tolerance based on the wear rates measured on the ASTM E1136 Course Monitoring Tire (CMT) from testing as specified in 49 CFR 575.104(e). When

[170] *See* National Highway Traffic Safety Administration, NHTSA Tire Rolling Resistance Rating System Test Development Project: Phase 2—Effects of Tire Rolling Resistance Levels on Traction, Treadwear, and Vehicle Fuel Economy (February 2009). This Phase 2 research report will be placed in the docket.

analyzed, the data revealed the standard deviation to be 0.84 mils per 1,000 miles, and normally, the agency would consider ±2 standard deviations (1.6 mils per 1,000 miles) to be a suitable tolerance, which would capture 95 percent of the data around the average wear rate. However, the CMT is a limited production tire made to tightened specifications, and the agency believes that this justifies an expansion of the tolerance to ±3 standard deviations (2.5 mils per 1,000 miles) which will capture 99 percent of the data around the average wear rate. For compliance purposes, the wear rate established by the manufacturer must be between ±2.5 mils per 1,000 miles of the wear rate revealed from agency testing.

The agency acknowledges that any wear rate result will be obtained from a tire that is different from the tire or tires that the manufacturer used to establish the reported wear rate. In these cases, there will be new variability introduced into the compliance testing of a production tire from such factors as from machine-to-machine tests, lab-to-lab tests, different manufacturing dates, different batches of material, and possibly at different manufacturing plants. The agency does not have sufficient data to comprehensively establish tolerances considering these factors, so the agency solicits comments and proposals for a tolerance that considers these factors, and requests that wherever possible, supporting data is provided. The manufacturer will be required to submit to the agency the wear rate from testing and the durability rating it assigned for each tire.

XII. Regulatory Alternatives

Throughout sections specific to various portions of the tire fuel efficiency consumer information program for replacement tires, NHTSA has discussed other options considered by the agency.

XIII. Public Participation

How Do I Prepare and Submit Comments?

Your comments must be written and in English. To ensure that your comments are correctly filed in the Docket, please include the docket number of this document in your comments. Your comments must not be more than 15 pages long.[171] We established this limit to encourage you to write your primary comments in a concise fashion. However, you may attach necessary additional documents to your comments. There is no limit on the length of the attachments.

Please submit your comments by any of the following methods:

- *Federal eRulemaking Portal:* Go to *http://www.regulations.gov.* Follow the instructions for submitting comments on the electronic docket site by clicking on ''Help'' or ''FAQ.''
- *Mail:* Docket Management Facility, M–30, U.S. Department of Transportation, West Building, Ground Floor, Rm. W12–140, 1200 New Jersey Avenue, SE., Washington, DC 20590.
- *Hand Delivery or Courier:* West Building Ground Floor, Room W12–140, 1200 New Jersey Avenue, SE., between 9 a.m. and 5 p.m. Eastern Time, Monday through Friday, except Federal holidays.
- *Fax:* (202) 493–2251.

If you are submitting comments electronically as a PDF (Adobe) file, we ask that the documents submitted be scanned using Optical Character Recognition (OCR) process, thus allowing the agency to search and copy certain portions of your submissions.[172]

Please note that pursuant to the Data Quality Act, in order for substantive data to be relied upon and used by the agency, it must meet the information quality standards set forth in the OMB and DOT Data Quality Act guidelines. Accordingly, we encourage you to consult the guidelines in preparing your comments. OMB's guidelines may be accessed at *http://www.whitehouse.gov/omb/fedreg/reproducible.html.* DOT's guidelines may be accessed at *http://dmses.dot.gov/submit/DataQualityGuidelines.pdf.*

How Can I Be Sure That My Comments Were Received?

If you submit your comments by mail and wish Docket Management to notify you upon its receipt of your comments, enclose a self-addressed, stamped postcard in the envelope containing your comments. Upon receiving your comments, Docket Management will return the postcard by mail.

How Do I Submit Confidential Business Information?

If you wish to submit any information under a claim of confidentiality, you should submit three copies of your complete submission, including the information you claim to be confidential business information, to the Chief Counsel, NHTSA, at the address given above under **FOR FURTHER INFORMATION CONTACT**. When you send a comment containing information claimed to be confidential business information, you should include a cover letter setting forth the information specified in our confidential business information regulation.[173]

In addition, you should submit a copy, from which you have deleted the claimed confidential business information, to the Docket by one of the methods set forth above.

Will the Agency Consider Late Comments?

We will consider all comments received before the close of business on the comment closing date indicated above under **DATES**. To the extent possible, we will also consider comments received after that date. Therefore, if interested persons believe that any new information the agency places in the docket affects their comments, they may submit comments after the closing date concerning how the agency should consider that information for the final rule.

If a comment is received too late for us to consider in developing a final rule (assuming that one is issued), we will consider that comment as an informal suggestion for future rulemaking action.

How Can I Read the Comments Submitted by Other People?

You may read the materials placed in the docket for this document (*e.g.,* the comments submitted in response to this document by other interested persons) at any time by going to *http://www.regulations.gov.* Follow the online instructions for accessing the dockets. You may also read the materials at the Docket Management Facility by going to the street address given above under **ADDRESSES**. The Docket Management Facility is open between 9 a.m. and 5 p.m. Eastern Time, Monday through Friday, except Federal holidays.

XIV. Regulatory Notices and Analyses

A. Executive Order 12866 and DOT Regulatory Policies and Procedures

Executive Order 12866, ''Regulatory Planning and Review'' (58 FR 51735, Oct. 4, 1993), provides for making determinations whether a regulatory action is ''significant'' and therefore subject to Office of Management and Budget (OMB) review and to the requirements of the Executive Order. The Order defines a ''significant regulatory action'' as one that is likely to result in a rule that may:

(1) Have an annual effect on the economy of $100 million or more or adversely affect in a material way the economy, a sector of the economy,

[171] *See* 49 CFR 553.21.

[172] Optical character recognition (OCR) is the process of converting an image of text, such as a scanned paper document or electronic fax file, into computer-editable text.

[173] *See* 49 CFR part 512.

productivity, competition, jobs, the environment, public health or safety, or State, local or Tribal governments or communities;

(2) Create a serious inconsistency or otherwise interfere with an action taken or planned by another agency;

(3) Materially alter the budgetary impact of entitlements, grants, user fees, or loan programs or the rights and obligations of recipients thereof; or

(4) Raise novel legal or policy issues arising out of legal mandates, the President's priorities, or the principles set forth in the Executive Order.

We have considered the impact of this rulemaking action under Executive Order 12866 and the Department of Transportation's regulatory policies and procedures. The annual effect on the economy of this rulemaking depends on consumer and manufacturer responses to the program. However, this rulemaking is significant due to public interest in the issues. Therefore, this document was reviewed by the Office of Management and Budget under E.O. 12866, ''Regulatory Planning and Review.''

This document would amend 49 CFR part 575 by adding a new section for requirements pursuant to the National Tire Fuel Efficiency Consumer Information Program. The agency has prepared a Preliminary Regulatory Impact Analysis (PRIA) and placed it in the docket and on the agency's Web site. There are two sets of costs involved: Costs to set up the information program and provide consumer information and costs to improve the rolling resistance of tires. Program costs are estimated to be about $9.1 million per year. Costs per tire are estimated to range from $2 to $4 per tire and average around $3 per tire. If 10 percent of the target tire population (15 million tires) decreased their rolling resistance, the annual cost would be $45 million. Assuming 10 percent of tires improve their rolling resistance, the combined annual cost of the program would be $54.1 million. For a further explanation of the estimated costs, *see* the PRIA provided in the docket for this proposal.

B. National Environmental Policy Act

We have reviewed this proposal for the purposes of the National Environmental Policy Act and determined that it would not have a significant impact on the quality of the human environment.

C. Regulatory Flexibility Act

Pursuant to the Regulatory Flexibility Act (5 U.S.C. 601 *et seq.,* as amended by the Small Business Regulatory Enforcement Fairness Act (SBREFA) of 1996), whenever an agency is required to publish a notice of rulemaking for any proposed or final rule, it must prepare and make available for public comment a regulatory flexibility analysis that describes the effect of the rule on small entities (*i.e.,* small businesses, small organizations, and small governmental jurisdictions). The Small Business Administration's regulations at 13 CFR part 121 define a small business, in part, as a business entity ''which operates primarily within the United States.'' 13 CFR 121.105(a). No regulatory flexibility analysis is required if the head of an agency certifies the rule will not have a significant economic impact on a substantial number of small entities.

In compliance with the Regulatory Flexibility Act NHTSA has evaluated the effects of this proposed rule on small entities. The head of the agency has certified that the proposed rule would not have a significant economic impact on a substantial number of small entities. The following is NHTSA's statement providing the factual basis for the certification (5 U.S.C. 605(b)). Tire manufacturers are not small entities. Out of the 60,000 entities that sell tires, there are a substantial number of tire dealers/retailers that are small entities. However, the only part of the proposal with potential cost implications for tire dealers/retailers is that those with display rooms must display the program poster which NHTSA will provide. We do not believe that this will result in a significant economic impact on tire dealers/retailers.

D. Executive Order 13132 (Federalism)

NHTSA has examined today's proposed rule pursuant to Executive Order 13132 (64 FR 43255, August 10, 1999). Executive Order 13132 requires agencies to determine the federalism implications of a proposed rule.

The agency refers readers to section II.B.7 above, ''Application with State and local laws and regulations.'' As noted there, given the ambiguity of the statutory language regarding preemption, the agency is sending a copy of this NPRM directly to the State of California, the National Governor's Association, the National Conference of State Legislatures, the Council of State Governments, and the National Association of Attorneys General. As also noted there, NHTSA has already generally consulted with counsel for the California Energy Commission regarding various aspects of this agency's analysis of that language.

E. Executive Order 12988 (Civil Justice Reform)

Pursuant to Executive Order 12988, ''Civil Justice Reform,'' [174] NHTSA has considered whether this rulemaking would have any retroactive effect. This proposed rule does not have any retroactive effect.

F. Unfunded Mandates Reform Act

Section 202 of the Unfunded Mandates Reform Act of 1995 (UMRA) requires Federal agencies to prepare a written assessment of the costs, benefits, and other effects of a proposed or final rule that includes a Federal mandate likely to result in the expenditure by State, local, or Tribal governments, in the aggregate, or by the private sector, of more than $100 million in any one year (adjusted for inflation with base year of 1995). Adjusting this amount by the implicit gross domestic product price deflator for 2007 results in $130 million (119.816/92.106 = 1.30).

Before promulgating a rule for which a written statement is needed, section 205 of the UMRA generally requires NHTSA to identify and consider a reasonable number of regulatory alternatives and adopt the least costly, most cost-effective, or least burdensome alternative that achieves the objectives of the rule. The provisions of section 205 do not apply when they are inconsistent with applicable law. Moreover, section 205 allows NHTSA to adopt an alternative other than the least costly, most cost-effective, or least burdensome alternative if the agency publishes with the final rule an explanation why that alternative was not adopted.

This proposed rule will not result in the expenditure by State, local, or tribal governments, in the aggregate, of more than $130 million annually, and will not result in the expenditure of that magnitude by tire manufacturers and/or tire retailers. In promulgating this proposal, NHTSA considered a variety of alternative tire fuel efficiency rating systems and information dissemination requirement options. NHTSA is statutorily required to establish a national tire fuel efficiency rating program for the purpose of educating consumers about the effect of tires on fuel efficiency, safety and durability. NHTSA tentatively concludes that the proposed requirements are cost-effective and the least burdensome way to fulfill the statutory requirements of the program.

[174] 61 FR 4729 (Feb. 7, 1996).

G. Paperwork Reduction Act

Under the procedures established by the Paperwork Reduction Act of 1995 (PRA), a person is not required to respond to a collection of information by a Federal agency unless the collection displays a valid OMB control number. The proposed rule would require manufacturers of tires to provide data on tires to NHTSA and to attach labels to replacement tires.

In compliance with the PRA, we announce that NHTSA is seeking comment on a new information collection.

Agency: National Highway Traffic Safety Administration (NHTSA).

Title: 49 CFR part 575; Tire Fuel Efficiency.

OMB Control Number: Not assigned.

Form Number: The collection of this information uses no standard form.

Requested Expiration Date of Approval: Three years from the date of approval.

Summary of the Collection of Information

NHTSA is proposing a new requirement in Part 575 which would require tire manufacturers and tire brand name owners to rate all replacement passenger car tires for fuel efficiency (*i.e.,* rolling resistance), safety (*i.e.,* wet traction), and durability (*i.e.,* treadwear), and submit reports to NHTSA regarding the test values on which these ratings are based. The ratings for safety and durability are based on test procedures specified under the UTQGS traction and treadwear ratings requirements. This information would be used by consumers of replacement passenger car tires to compare tire fuel efficiency across different tires and examine any trade offs between fuel efficiency (*i.e.,* rolling resistance), safety (*i.e.,* wet traction), and durability (*i.e.,* treadwear) in making their purchase decisions.

The information would be provided in a couple different ways: (1) A paper label of specified format affixed to the tread face of the new tire; and (2) tire manufacturers would provide data to NHTSA under a reporting requirement. Tire retailers would inform consumers of the fuel efficiency rating system by displaying a poster that NHTSA would print and distribute. NHTSA would make the ratings data available to the public both in printed form and via the Internet.

Estimated Annual Burden

The label that NHTSA is proposing to require is already covered by an existing information collection (OMB Control Number 2127–0519). The agency estimates that the incremental cost of the additional information required on the label manufacturers already affix to the tire would be $.05 cents per label. Based on an estimate of 191 million replacement tires sold annually that are affected by this proposal, the cost of the label would be $9.55 million.

The next source of burden to manufacturers is the reporting costs. NHTSA estimates that there are 28 tire manufacturers that will be required to report. Each of these will need to set up the software in a computer program to combine the testing information, organize it for NHTSA's use, *etc.* We estimate this cost to be a one-time charge of about $10,000 per company. Based on the costs used in the Early Warning Reporting Regulation analysis,[175] we estimate the annual cost per report per tire manufacturer to be $287. There are also computer maintenance costs of keeping the data up to date, *etc.*, as tests come in throughout the year. In the EWR analysis, we estimated costs of $3,755 per year per company. Thus, the total annual cost is estimated to be $4,042 per company. Thus the total costs would be $280,000 + $113,176 = $393,176 for the first year and $113,176 as an annual cost for the 28 tire manufacturers.

The largest portion of the cost burden imposed by the tire fuel efficiency program arises from the testing necessary to determine the ratings that should be assigned to the tires. Two of the proposed tests are already covered by an existing information collection (OMB Control Number 2127–0519). The agency estimates that, at least initially, there are 20,708 tires that would need to be tested to provide information for the third rating. At a cost of approximately $180 per test, if each one of these were tested once for tire rolling resistance, the costs to the industry would be $3,727,000. After the first few years of this program, the number of tires manufacturers will need to test annually will probably decrease. Based upon the average number of reports the agency receives under the UTQGS program, the agency estimates that 125 new/redesigned tires will need to be tested annually, for ongoing testing costs of $22,500.

Estimated Annual Burden to the Government

The estimated annual cost to the Federal Government is $1.28 million. This cost includes $730,000 for enforcement testing, and about $550,000 annually to set up and keep up to date a Web site that includes the information reported to NHTSA.

Number of Respondents

There are approximately 28 manufacturers of replacement tires sold in the United States.

Comments Are Invited On

Whether the proposed collection of information is necessary for the proper performance of the functions of the Department, including whether the information will have practical utility; the accuracy of the Department's estimate of the burden of the proposed information collection; ways to enhance the quality, utility and clarity of the information to be collected; and ways to minimize the burden of the collection of information on respondents, including the use of automated collection techniques or other forms of information technology. Please submit any comments to the NHTSA Docket Number referenced in the heading of this document, and to Mary Versailles as referenced in the **FOR FURTHER INFORMATION CONTACT** section of this document. Comments are due by August 21, 2009.

H. Executive Order 13045

Executive Order 13045 [176] applies to any rule that: (1) Is determined to be economically significant as defined under E.O. 12866, and (2) concerns an environmental, health or safety risk that NHTSA has reason to believe may have a disproportionate effect on children. If the regulatory action meets both criteria, we must evaluate the environmental health or safety effects of the proposed rule on children, and explain why the proposed regulation is preferable to other potentially effective and reasonably feasible alternatives considered by us.

This proposed rule does not pose such a risk for children. The primary effects of this proposal are to conserve energy by educating consumers to make better informed tire purchasing decisions.

I. National Technology Transfer and Advancement Act

Section 12(d) of the National Technology Transfer and Advancement Act (NTTAA) requires NHTSA to evaluate and use existing voluntary consensus standards in its regulatory activities unless doing so would be inconsistent with applicable law (*e.g.,*

[175] Preliminary Regulatory Evaluation, Tread Act Amendments to Early Warning Reporting Regulation Part 579 and Defect and Noncompliance Part 573, August 2008 (Docket No. 2008–0169–0007.1).

[176] 62 FR 19885 (Apr. 23, 1997).

the statutory provisions regarding NHTSA's vehicle safety authority) or otherwise impractical.

Voluntary consensus standards are technical standards developed or adopted by voluntary consensus standards bodies. Technical standards are defined by the NTTAA as ''performance-based or design-specific technical specification and related management systems practices.'' They pertain to ''products and processes, such as size, strength, or technical performance of a product, process or material.''

Examples of organizations generally regarded as voluntary consensus standards bodies include the American Society for Testing and Materials (ASTM), the Society of Automotive Engineers (SAE), and the American National Standards Institute (ANSI). If NHTSA does not use available and potentially applicable voluntary consensus standards, we are required by the Act to provide Congress, through OMB, an explanation of the reasons for not using such standards.

The notice proposes a national tire fuel efficiency rating system for replacement passenger car tires to assist consumers in making more educated tire purchasing decisions. For purposes of the fuel efficiency rating determination, NHTSA proposed to base the rating determination on a rolling resistance test method nearly finalized by ISO, ISO 28580: *Tyre Rolling Resistance measurement method—Single point test and measurement result correlation—Designed to facilitate international cooperation and, possibly, regulation building.* The ISO is a worldwide federation of national standards bodies that prepares standards through technical committees comprised of international organizations, governmental and non-governmental, in liaison with ISO.[177] Standards developed by ISO are voluntary consensus standards.

J. Executive Order 13211

Executive Order 13211 [178] applies to any rule that: (1) Is determined to be economically significant as defined under E.O. 12866, and is likely to have a significant adverse effect on the supply, distribution, or use of energy; or (2) that is designated by the Administrator of the Office of Information and Regulatory Affairs as a significant energy action. If the regulatory action meets either criterion, we must evaluate the adverse energy effects of the proposed rule and explain why the proposed regulation is preferable to other potentially effective and reasonably feasible alternatives considered by NHTSA.

The proposed rule seeks to establish a national tire fuel efficiency rating program for the purpose of educating consumers about the effect of tires on fuel efficiency, safety and durability, which if successful, will likely reduce the rolling resistance of replacement passenger car tires and, thus, reduce the consumption of petroleum. Therefore, this proposed rule will not have any adverse energy effects. Accordingly, this proposed rulemaking action is not designated as a significant energy action.

K. Regulation Identifier Number (RIN)

The Department of Transportation assigns a regulation identifier number (RIN) to each regulatory action listed in the Unified Agenda of Federal Regulations. The Regulatory Information Service Center publishes the Unified Agenda in April and October of each year. You may use the RIN contained in the heading at the beginning of this document to find this action in the Unified Agenda.

L. Plain Language

Executive Order 12866 requires each agency to write all rules in plain language. Application of the principles of plain language includes consideration of the following questions:

- Have we organized the material to suit the public's needs?
- Are the requirements in the rule clearly stated?
- Does the rule contain technical language or jargon that isn't clear?
- Would a different format (grouping and order of sections, use of headings, paragraphing) make the rule easier to understand?
- Would more (but shorter) sections be better?
- Could we improve clarity by adding tables, lists, or diagrams?
- What else could we do to make the rule easier to understand?

If you have any responses to these questions, please include them in your comments on this proposal.

M. Privacy Act

Anyone is able to search the electronic form of all comments received into any of our dockets by the name of the individual submitting the comment (or signing the comment, if submitted on behalf of an organization, business, labor union, *etc.*). You may review DOT's complete Privacy Act statement in the **Federal Register** published on April 11, 2000 (Volume 65, Number 70; Pages 19477–78) or you may visit *http://www.dot.gov/privacy.html*.

List of Subjects in 49 CFR Part 575

Consumer protection, Motor vehicle safety, Reporting and recordkeeping requirements, Tires.

In consideration of the foregoing, NHTSA proposes to amend 49 CFR Part 575 as follows:

PART 575—CONSUMER INFORMATION

1. Revise the authority citation for Part 575 to read as follows:

Authority: 49 U.S.C. 32302, 32304A, 30111, 30115, 30117, 30123, 30166, and 30168, Pub. L. 104–414, 114 Stat. 1800, Pub. L. 109–59, 119 Stat. 1144, Pub. L. 110–140, 121 Stat. 1492, 15 U.S.C. 1232(g); delegation of authority at 49 CFR 1.50.

2. Add § 575.106 to subpart B to read as follows:

§ 575.106 Tire fuel efficiency consumer information program.

(a) *Scope.* This section requires tire manufacturers, tire brand name owners, and tire retailers to provide information indicating the relative performance of replacement passenger car tires in the areas of fuel efficiency, safety, and durability.

(b) *Purpose.* The purpose of this section is to aid consumers in making better educated choices in the purchase of passenger car tires.

(c) *Application.* This section applies to replacement passenger car tires. However, this section does not apply to deep tread, winter-type snow tires, space-saver or temporary use spare tires, tires with nominal rim diameters of 12 inches or less, or to limited production tires as defined in § 575.104(c)(2).

(d) *Definitions.* As used in this section:

Passenger car tire means a tire intended for use on passenger cars, multipurpose passenger vehicles, and trucks, that have a gross vehicle weight rating (GVWR) of 10,000 pounds or less.

Ratings graphic means a graphical depiction of a tire's fuel efficiency, safety, and durability ratings information, as reported to NHTSA under paragraph (e)(1)(i)(C) of this section, that conforms in content, format and sequence to the sample label depicted in Figure 1 of this section.

Replacement passenger car tire means any passenger car tire other than a passenger car tire sold as original equipment on a new vehicle.

Size designation means the alpha-numeric designation assigned by a

[177] ISO Central Secretariat, 1, ch. de la Voie-Creuse, Case postale 56, CH–1211 Geneva 20, Switzerland, Telephone +41 22 749 01 11, Fax +41 22 733 34 30, *http://www.iso.org.*

[178] 66 FR 28355 (May 18, 2001).

manufacturer that identifies a tire's size. This can include identifications of tire class, nominal width, aspect ratio, tire construction, and wheel diameter.

Tire line or *tire model* means the entire name used by a tire manufacturer to designate a tire product including all prefixes and suffixes as they appear on the sidewall of a tire.

Tire retailer means a person or business that offers a tire for sale and with whom a replacement passenger car tire manufacturer or brand name owner has a contractual, proprietary, or other legal relationship, or a person or business who has such a relationship with a distributor of the replacement passenger car tire manufacturer or brand name owner concerning the tire in question.

(e) *Requirements.*—(1) *Information.* (i) *Requirements for tire manufacturers.* Each manufacturer of tires, or in the case of tires marketed under a brand name, each brand name owner, shall provide rating information for each tire of which it is the manufacturer or brand name owner in the manner set forth in paragraphs (e)(1)(i)(A) through (D) of this section. The ratings for each tire shall be only those specified in paragraph (e)(2) of this section. For the purposes of this section, each tire of a different size designation is to be rated separately. Each tire shall be able to achieve the level of performance represented by each rating with which it is labeled. An individual tire need not, however, meet further requirements after having been subjected to the test for any one rating.

(A) *Ratings.* Each tire shall be rated with the words, letters, symbols, and figures specified in paragraph (e)(2) of this section. Each shall display this rating information using the ratings graphic illustrated in Figure 1 on either the tire label required by § 575.104(d)(1)(i)(B), or on a separate tire label, as set forth in paragraph (e)(1)(i)(B) of this section.

(B) *Tire label.* Each tire manufactured on or after the effective date of these amendments shall have affixed to its tread surface so as not to be easily removable a label containing its ratings graphic, as illustrated in Figure 1. The label shall be no less than 4.5 inches high and 5.5 inches wide. The fuel efficiency, safety and durability ratings attributed to the tire shall be either imprinted or indelibly stamped on the ratings graphic on the label in the appropriate location along each scale, as described in this paragraph (e)(1)(i)(B). For purposes of the ratings graphic required by this section, the fuel efficiency, safety and durability ratings, each an integer ranging from 0 to 100, shall appear in a white box superimposed upon the color shaded rating scale, and directly above the arrow which shall be located in the location that corresponds to where the respective rating falls, where each shaded box represents an increment of 5 on each rating scale. Namely, since the ratings graphic has 20 boxes for each rating scale, the first box would contain the arrow pointing to the white box containing the score if a tire is rated 1 through 4. An arrow indicating a rating of 5 would appear directly on the rightmost edge of the leftmost color shaded, *i.e.,* reddest, box. The 20th, or rightmost, box would contain the arrow pointing to the white box containing the rating if a tire is rated 96 through 99. An arrow indicating a rating of 95 would appear directly on the leftmost edge of the rightmost color shaded, *i.e.,* greenest, box. An arrow indicating a rating of 100 would appear directly on the rightmost edge of the rightmost color shaded, *i.e.,* greenest, box.

(*1*) *Ratings graphic text.* The text ''FUEL EFFICIENCY and GREENHOUSE GAS RATING,'' ''SAFETY RATING (WET TRACTION),'' and ''DURABILITY RATING (TREADWEAR),'' and ''For more information visit www.nhtsa.gov,'' must have a minimum font size of 12 point. The remaining text in the header area of the ratings graphic (*i.e.,* ''GOVERNMENT TIRE RATING,'' tire manufacturer or brand name owner specification, tire line specification, tire size specification), and the 0 to 100 number rating on each rating scale, must have a minimum font size of 14 point. All remaining text and numbers on the label must have a minimum font size of 10 point.

(*2*) *Ratings graphic color.* The text and numbers of the ratings graphic shall be dark in color, with a background that is light in color. The three scales on the ratings graphic shall be presented in color, where the first of 20 squares (*i.e.,* the leftmost square on each scale) shall be primary red, the 2nd of 20 squares shall be a slightly lighter shade of red than the leftmost (*i.e.,* 1st) square, the 3rd square shall be a slightly lighter shade of red than the 2nd square, and so on until the 10th of 20 squares, which should be nearly white. The last of 20 squares (*i.e.,* the rightmost square) shall be primary green, the 19th square shall be a slightly lighter shade of green than the 20th square, the 18th square shall be a shade of green slightly lighter than the 19th square, and so on until the 10th of 20 squares, which should be nearly white. Sample ratings graphics that depict the appropriate color schemes are available at *http://www.nhtsa.gov.*

(*3*) *Ratings graphic orientation.* The ratings graphic of Figure 1 shall be oriented on the tire tread surface with lines of type running perpendicular to the tread circumference. If a label bearing a tire size designation is attached to the tire tread surface and the tire size designation is oriented with lines of type running perpendicular to the tread circumference, the ratings graphic of Figure 1 shall read in the same direction as the tire size designation.

(*4*) *New ratings information.* Whenever the tire manufacturer, or in the case of tires marketed under a brand name the brand name owner, determines new or different fuel efficiency, safety, or durability ratings information for a tire, the tire manufacturer or brand name owner shall include the new ratings information on and with tires manufactured on or after the date 30 calendar days after receipt by the manufacturer of the new information.

(C) *Reporting requirements.* The information collection requirements contained in this section have been approved by the Office of Management and Budget under the provisions of the Paperwork Reduction Act (44 U.S.C. 3501 *et seq.*) and have been assigned OMB Control Number XXXX–XXXX.

(*1*) Manufacturers of tires, or in the case of tires marketed under a brand name, brand name owners of tires subject to this section shall submit to NHTSA electronically, either directly or through an agent, the following data for each rated replacement passenger car tire by one year after the effective date of these regulations:

(*i*) Rolling resistance force, in Newtons and must be followed in parenthesis by the equivalent pounds-force, *e.g.,* 5 Newtons (1.12 lbf)., as measured in paragraph (f) of this section.

(*ii*) Test load, in Newtons and must be followed in parenthesis by the equivalent pounds-force, *e.g.,* 5 Newtons (1.12 lbf), as measured in paragraph (f) of this section.

(*iii*) Rolling resistance rating (0 to 100), as determined in paragraph (e)(2)(i) of this section.

(*iv*) Traction rating (0 to 100), as determined in paragraph (e)(2)(ii) of this section.

(*v*) Treadwear rating (0 to 100), as determined in paragraph (e)(2)(iii) of this section.

(*vi*) Average peak coefficient of friction for asphalt, as measured in § 575.104(f).

(*vii*) Average peak coefficient of friction for concrete, as measured in § 575.104(f).

(*viii*) Adjusted peak coefficient of friction for asphalt (μ_{APA}), based on the formula in paragraph (e)(2)(ii) of this section.

(*ix*) Adjusted peak coefficient of friction for concrete (μ_{APC}), based on the formula in paragraph (e)(2)(ii) of this section.

(*x*) Wear rate of tested tire, as measured during the UTQGS treadwear procedure (49 CFR 575.104(e)).

(*2*) *Format of data submitted.* The information required under paragraph (e)(1)(i)(C)(*1*) of this section shall be submitted to NHTSA in electronic format.

(*3*) *New ratings information.* Whenever the tire manufacturer, or in the case of tires marketed under a brand name, the brand name owner determines new or different information required under paragraph (e)(1)(i)(C)(*1*) of this section for a tire, the tire manufacturer or brand name owner shall submit the new ratings information to NHTSA on or before the date 30 calendar days after receipt by the manufacturer of the new information.

(ii) *Requirements for tire retailers.* Each tire retailer shall provide rating information for each passenger car tire offered for sale in the manner set forth in paragraphs (e)(1)(ii)(A) and (B) of this section.

(A) A tire retailer shall not remove the label containing the ratings graphic required by paragraph (e)(1)(i)(B) of this section, until the tire has been sold.

(B) A tire retailer that has a display room, or that displays sample tires for sale to consumers, shall display a tire fuel efficiency consumer information program poster that NHTSA shall print and provide to tire retailers.

(iii) *Linking to NHTSA's tire Web site.* Tire manufacturers and tire retailers that have or maintain Web sites must link to NHTSA's tire Web site (*http://www.nhtsa.gov*) from their main (top) Web page no later than 12 months after this regulation is effective or the day the Web site is online and available to the public.

(2) *Performance.*—(i) *Fuel efficiency.* Each tire shall be rated for fuel efficiency performance on a scale of 0 to 100, as calculated using the following formula, where RRF is the NHTSA nominal rolling resistance force value obtained when the tire is tested in accordance with the conditions and procedures specified in paragraph (f) of this section. A fuel efficiency rating (R_{FE}) shall be expressed as an integer 0 to 100 (for example, 51, 64, 80) by rounding R_{FE} to the nearest whole number. The maximum rating that may be assigned to the candidate tire is R_{FE}, as calculated using this formula.

$$R_{FE} = (RRF_{max} - RRF) * 100/(RRF_{max} - RRF_{min})$$

Where RRF_{max} is equal to 25 and represents the highest rolling resistance the agency believes should be represented on the fuel efficiency rating scale and where RRF_{min} is equal to 5 and represents the lowest rolling resistance the agency believes should be represented on the fuel efficiency rating scale.

(ii) *Traction.* Each tire shall be rated for traction performance on a scale of 0 to 100, as calculated using the following formula, where μ_{APA} and μ_{APC} are the nominal peak coefficient of friction values obtained when the tire is tested in accordance with the conditions and procedures specified in paragraph (g) of this section. A traction rating (R_{TC}) shall be expressed as an integer between 0 and 100 (for example, 51, 64, 80) by rounding R_{TC} to the nearest whole number. The maximum rating that may be assigned to the candidate tire is R_{TC}, as calculated using this formula.

$$R_{TC} = \{(\mu_{APA} + \mu_{APC})\ \{1 - [(\mu_{APA} - \mu_{APC})/(\mu_{APA} + \mu_{APC})]^2\} - 0.6\} * (100/2.0)$$

Where:

μ_{APA} = adjusted peak coefficient of friction for asphalt, and

μ_{APC} = adjusted peak coefficient of friction for concrete

(iii) *Treadwear.* Each tire shall be rated for treadwear performance on a scale of 0 to 100, as calculated using the following formula, where TW_{UTQGS} is the traction grading as specified in § 575.104(d)(2)(i). A traction rating (R_{TW}) shall be expressed as an integer between 0 and 100 (for example, 51, 64, 80) by rounding R_{TW} to the nearest whole number. The maximum rating that may be assigned to the candidate tire is R_{TW}, as calculated using this formula.

$$R_{TW} = TW_{UTQGS}/10$$

(f) *Fuel efficiency rating conditions and procedures.*—(1) *Conditions.* (i) Measurement of rolling resistance force under the test procedure specified in paragraph (f)(2) of this section shall be made using either the force or the torque method.

(ii) The test procedure specified in paragraph (f)(2) of this section shall be carried out on an 80-grit roadwheel surface.

(2) *Procedure.* The test procedure shall be as specified in International Organization for Standardization (ISO), ISO 28580: *Tyre Rolling Resistance measurement method—Single point test and measurement result correlation—Designed to facilitate international cooperation and, possibly, regulation building,* except that the conditions specified in paragraph (f)(1) of this section shall be used.

(g) *Traction rating conditions and procedures.* (1) *Conditions.* Test conditions are as specified in § 575.104(f)(1).

(2) *Procedure.* (i) Prepare two standard tires as specified in § 575.104(f)(2)(i).

(ii) Mount the tires on the test apparatus described in § 575.104(f)(1)(iv) and load each tire to 1,085 pounds.

(iii) Tow the trailer on the asphalt test surface specified in § 575.104(f)(1)(i) at a speed of 40 mph, lock one trailer wheel, and record the peak coefficient of friction on the tire associated with that wheel. Peak coefficient shall be measured between 0.35 and 0.65 seconds after initiation of braking sequence.

(iv) Repeat the test on the concrete surface, locking the same wheel.

(v) Repeat the tests specified in paragraphs (g)(2)(iii) and (iv) of this section for a total of 10 measurements on each test surface.

(vi) Repeat the procedures specified in paragraphs (g)(2)(iii) through (v) of this section, locking the wheel associated with the other standard tire.

(vii) Average the 20 measurements taken on the asphalt surface to find the standard tire average peak coefficient of friction for the asphalt surface. Average the 20 measurements taken on the concrete surface to find the standard tire average peak coefficient of friction for the concrete surface. The standard tire average peak coefficient of friction so determined may be used in the computation of adjusted peak coefficient of friction coefficients for more than one candidate tire.

(viii) Prepare two candidate tires of the same construction type, manufacturer, tire line, and size designation in accordance with paragraph (g)(2)(i) of this section, mount them on the test apparatus, and test one of them according to the procedures of paragraphs (g)(2)(ii) through (v) of this section, except load each tire to 85% of the test load specified in § 575.104(h). For CT tires, the test inflation of candidate tires shall be 230 kPa. Candidate tire measurements may be taken either before or after the standard tire measurements used to compute the standard tire traction coefficient. Take all standard tire and candidate tire measurements used in computation of a candidate tire's adjusted peak coefficient of friction within a single three hour period. Average the 10 measurements taken on the asphalt

surface to find the candidate tire average peak coefficient of friction for the asphalt surface. Average the 10 measurements taken on the concrete surface to find the candidate tire average peak coefficient of friction for the concrete surface.

(ix) Repeat the procedures specified in paragraph (g)(2)(viii) of this section, using the second candidate tire as the tire being tested.

(x) Compute each candidate tire's adjusted peak coefficient of friction for asphalt (μ_{APA}) by the following formula:

μ_{APA} = (Measured Candidate Tire Average Peak Coefficient of Friction for Asphalt + 0.75) – (Measured Standard Tire Average Peak Coefficient of Friction for Asphalt)

(xi) Compute each candidate tire's adjusted peak coefficient of friction for concrete (μ_{APC}) by the following formula:

μ_{APC} = (Measured Candidate Tire Average Peak Coefficient of Friction for Concrete + 0.60) – (Measured Standard Tire Average Peak Coefficient of Friction for Concrete)

(h) *Treadwear rating conditions and procedures.*—(1) *Conditions.* Test conditions are as specified in § 575.104(e)(1).

(2) *Procedure.* Test procedure is as specified in § 575.104(e)(2).

Tables and Figures to § 575.106

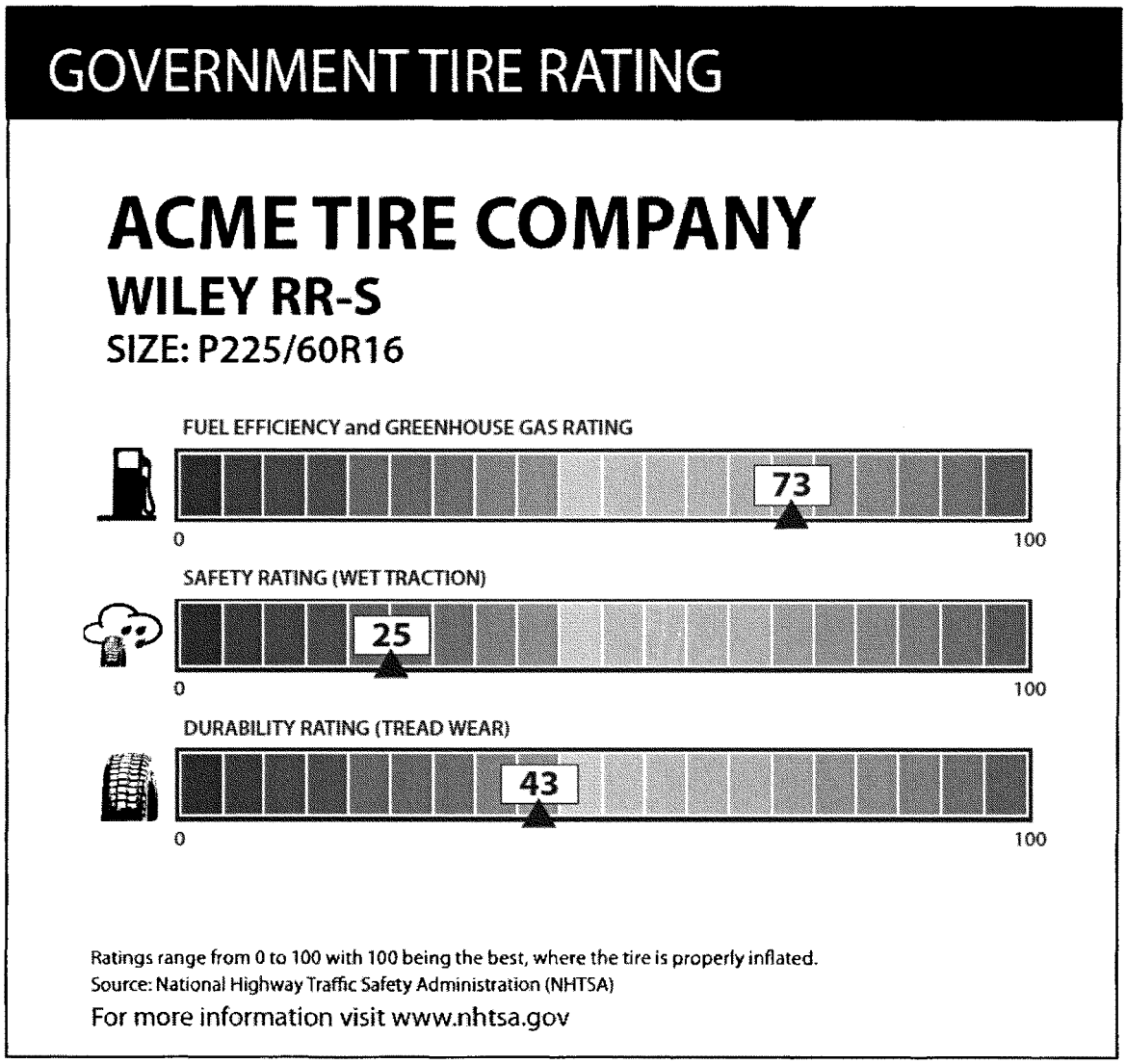

Figure 1 – Proposed Rating System Label

Issued on: June 16, 2009.

Stephen R. Kratzke,

Associate Administrator for Rulemaking.

[FR Doc. E9–14496 Filed 6–18–09; 11:15 am]

BILLING CODE P