AUTHENTICATED
U.S. GOVERNMENT
INFORMATION
GPO

Federal Register

12–31–08 Wednesday
Vol. 73 No. 251 Dec. 31, 2008

Pages 80289–80700

The **FEDERAL REGISTER** (ISSN 0097–6326) is published daily, Monday through Friday, except official holidays, by the Office of the Federal Register, National Archives and Records Administration, Washington, DC 20408, under the Federal Register Act (44 U.S.C. Ch. 15) and the regulations of the Administrative Committee of the Federal Register (1 CFR Ch. I). The Superintendent of Documents, U.S. Government Printing Office, Washington, DC 20402 is the exclusive distributor of the official edition. Periodicals postage is paid at Washington, DC.

The **FEDERAL REGISTER** provides a uniform system for making available to the public regulations and legal notices issued by Federal agencies. These include Presidential proclamations and Executive Orders, Federal agency documents having general applicability and legal effect, documents required to be published by act of Congress, and other Federal agency documents of public interest.

Documents are on file for public inspection in the Office of the Federal Register the day before they are published, unless the issuing agency requests earlier filing. For a list of documents currently on file for public inspection, see *www.federalregister.gov.*

The seal of the National Archives and Records Administration authenticates the Federal Register as the official serial publication established under the Federal Register Act. Under 44 U.S.C. 1507, the contents of the **Federal Register** shall be judicially noticed.

The **Federal Register** is published in paper and on 24x microfiche. It is also available online at no charge as one of the databases on GPO Access, a service of the U.S. Government Printing Office.

The online edition of the **Federal Register** *www.gpoaccess.gov/nara,* available through GPO Access, is issued under the authority of the Administrative Committee of the Federal Register as the official legal equivalent of the paper and microfiche editions (44 U.S.C. 4101 and 1 CFR 5.10). It is updated by 6 a.m. each day the **Federal Register** is published and includes both text and graphics from Volume 59, Number 1 (January 2, 1994) forward.

For more information about GPO Access, contact the GPO Access User Support Team, call toll free 1-888-293-6498; DC area 202-512-1530; fax at 202-512-1262; or via e-mail at *gpoaccess@gpo.gov.* The Support Team is available between 7:00 a.m. and 9:00 p.m. Eastern Time, Monday–Friday, except official holidays.

The annual subscription price for the **Federal Register** paper edition is $749 plus postage, or $808, plus postage, for a combined **Federal Register, Federal Register** Index and List of CFR Sections Affected (LSA) subscription; the microfiche edition of the **Federal Register** including the **Federal Register** Index and LSA is $165, plus postage. Six month subscriptions are available for one-half the annual rate. The prevailing postal rates will be applied to orders according to the delivery method requested. The price of a single copy of the daily **Federal Register,** including postage, is based on the number of pages: $11 for an issue containing less than 200 pages; $22 for an issue containing 200 to 400 pages; and $33 for an issue containing more than 400 pages. Single issues of the microfiche edition may be purchased for $3 per copy, including postage. Remit check or money order, made payable to the Superintendent of Documents, or charge to your GPO Deposit Account, VISA, MasterCard, American Express, or Discover. Mail to: U.S. Government Printing Office—New Orders, P.O. Box 979050, St. Louis, MO 63197-9000; or call toll free 1-866-512-1800, DC area 202-512-1800; or go to the U.S. Government Online Bookstore site, see *bookstore.gpo.gov.*

There are no restrictions on the republication of material appearing in the **Federal Register.**

How To Cite This Publication: Use the volume number and the page number. Example: 73 FR 12345.

Postmaster: Send address changes to the Superintendent of Documents, Federal Register, U.S. Government Printing Office, Washington, DC 20402, along with the entire mailing label from the last issue received.

SUBSCRIPTIONS AND COPIES

PUBLIC

Subscriptions:

Paper or fiche	**202–512–1800**
Assistance with public subscriptions	**202–512–1806**

General online information **202–512–1530; 1–888–293–6498**

Single copies/back copies:

Paper or fiche	**202–512–1800**
Assistance with public single copies	**1–866–512–1800 (Toll-Free)**

FEDERAL AGENCIES

Subscriptions:

Paper or fiche	**202–741–6005**
Assistance with Federal agency subscriptions	**202–741–6005**

FEDERAL REGISTER WORKSHOP

THE FEDERAL REGISTER: WHAT IT IS AND HOW TO USE IT

FOR: Any person who uses the Federal Register and Code of Federal Regulations.

WHO: Sponsored by the Office of the Federal Register.

WHAT: Free public briefings (approximately 3 hours) to present:

1. The regulatory process, with a focus on the Federal Register system and the public's role in the development of regulations.

2. The relationship between the Federal Register and Code of Federal Regulations.

3. The important elements of typical Federal Register documents.

4. An introduction to the finding aids of the FR/CFR system.

WHY: To provide the public with access to information necessary to research Federal agency regulations which directly affect them. There will be no discussion of specific agency regulations.

WHEN: Tuesday, January 27, 2009
9:00 a.m.–12:30 p.m.

WHERE: Office of the Federal Register
Conference Room, Suite 700
800 North Capitol Street, NW.
Washington, DC 20002

RESERVATIONS: (202) 741–6008

Printed on recycled paper.

Contents

Federal Register

Vol. 73, No. 251

Wednesday, December 31, 2008

Agency for Healthcare Research and Quality
NOTICES
Agency Information Collection Activities; Proposals, Submissions, and Approvals, 80410–80412

Agriculture Department
See Cooperative State Research, Education, and Extension Service
See Federal Crop Insurance Corporation
See Forest Service
See Natural Resources Conservation Service

Air Force Department
NOTICES
Privacy Act; Systems of Records, 80372–80379

Alcohol, Tobacco, Firearms, and Explosives Bureau
NOTICES
Commerce in Explosives; List of Explosive Materials, 80428–80430

Antitrust Division
NOTICES
National Cooperative Research and Production Act Notifications:
Cooperative Research Group on Development and Evaluation of Gas Chromatograph Testing Protocol, 80430
Network Centric Operations Industry Consortium, Inc., 80430
Open DeviceNet Vendor Association, Inc., 80430
Open SystemC Initiative, 80431
Petroleum Environmental Research Forum, 80431

Centers for Disease Control and Prevention
NOTICES
Board of Scientific Counselors, National Center for Injury Prevention and Control; Charter Amendment, 80412

Centers for Medicare & Medicaid Services
RULES
Medicare Program:
Payment Policies Under the Physician Fee Schedule and Other Revisions to Part B for CY 2009, etc.; Corrections, 80302–80305
NOTICES
Privacy Act; Systems of Records, 80412–80417

Coast Guard
RULES
Drawbridge Operation Regulations:
Curtis Creek in Baltimore MD, Maintenance, 80299
Raritan River, Arthur Kill, and their tributaries, NJ, 80298–80299
Salvage and Marine Firefighting Requirements; Vessel Response Plans for Oil, 80618–80654
NOTICES
Meetings:
Delaware River and Bay Oil Spill Advisory Committee, 80418–80419
Houston / Galveston Navigation Safety Advisory Committee, 80419–80420

Commerce Department
See Foreign-Trade Zones Board
See International Trade Administration
See National Oceanic and Atmospheric Administration

Commodity Futures Trading Commission
NOTICES
Request to exempt certain over-the-counter swaps from certain of the requirements imposed by Commission Regulation 35.2; Reopening of comment period, 80367–80368

Cooperative State Research, Education, and Extension Service
NOTICES
Agency Information Collection Activities; Proposals, Submissions, and Approvals, 80361–80362

Defense Department
See Air Force Department
See Navy Department
NOTICES
Agency Information Collection Activities; Proposals, Submissions, and Approvals, 80368–80369
Announcement of Federal Funding Opportunity, 80369–80371

Drug Enforcement Administration
NOTICES
Applications:
Norac Inc., 80431
Importer of Controlled Substances Application, 80431–80432
Importer of Controlled Substances Registration, 80432

Education Department
PROPOSED RULES
Establishment of Negotiated Rulemaking Committees, 80314–80317
NOTICES
Agency Information Collection Activities; Proposals, Submissions, and Approvals, 80382–80383

Energy Department
See Federal Energy Regulatory Commission

Environmental Protection Agency
RULES
Clean Air Act Prevention of Significant Deterioration (PSD) Construction Permit Program:
Interpretation of Regulations That Determine Pollutants Covered by the Federal PSD Permit Program, 80300–80301
Tolerance Actions:
2, 4-D, Bensulide, Chlorpyrifos, DCPA, Desmedipham, Dimethoate, Fenamiphos, Metolachlor, Phorate, Sethoxydim, Terbufos, etc.; Technical Amendment, 80301–80302
PROPOSED RULES
Proposed Tolerance Actions:
Azinphos-methyl, Disulfoton, Esfenvalerate, Ethylene Oxide, Fenvalerate, et al., 80317–80332

NOTICES
Availability of Preliminary Residual Designation of Certain Storm Water Discharges in State of Maine, 80388–80389
Filing of Pesticide Petition on Food Contact Surfaces, 80389–80390
Meetings:
Farm, Ranch, and Rural Communities Committee, 80390
Receipt of Request to Voluntarily Cancel Pesticide Registrations:
Fomesafen, 80390–80392
Standards of Performance for New Stationary Sources, National Emission Standards for Hazardous Air Pollutants, and the Stratospheric Ozone Protection Program
Posting to the Applicability Determination Index (ADI) Database System of Agency Applicability Determinations, etc., 80392–80407

Executive Office of the President
See Presidential Documents
See Trade Representative, Office of United States

Federal Aviation Administration
RULES
Airworthiness Directives:
CFM International, S. A. CFM56 5B Series Turbofan Engines, 80296–80297

Federal Communications Commission
RULES
Television Broadcasting Services:
Columbus, GA, 80305
Augusta, GA, 80305–80306
PROPOSED RULES
Implementation of Short-term Analog Flash and Emergency Readiness Act:
Establishment of DTV Transition ''Analog Nightlight'' Program, 80332–80349
NOTICES
Agency Information Collection Activities; Proposals, Submissions, and Approvals, 80407–80408

Federal Crop Insurance Corporation
RULES
Common Crop Insurance Regulations, Coverage Enhancement Option Provisions; Corrections, 80295

Federal Energy Regulatory Commission
NOTICES
Applications:
Richard Moss, 80383–80384
Combined Notice of Filings, 80384–80386
Filings:
Southwestern Power Administration, 80386–80387
Public Notice:
Records Governing Off-the Record Communications, 80387
Request Under Blanket Authorization:
Crossroads Pipeline Co., 80387–80388

Federal Maritime Commission
NOTICES
Ocean Transportation Intermediary License Applicants, 80408–80409

Federal Railroad Administration
PROPOSED RULES
Qualification and Certification of Locomotive Engineers; Miscellaneous Revisions, 80349–80360
NOTICES
Application for Approval of Discontinuance of Modification of a Railroad Signal System or Relief from the Requirements, 80509
Petition for Waiver of Compliance:
Suffolk, VA, 80509–80510

Federal Trade Commission
NOTICES
Granting of Request for Early Termination of the Waiting Period Under the Premerger Notification Rules, 80409–80410

Fish and Wildlife Service
NOTICES
Endangered and Threatened Species Permit Applications, 80420–80421
Final Comprehensive Conservation Plan and Finding of No Significant Impact:
Mattamuskeet National Wildlife Refuge, Hyde County, NC, 80421–80423

Foreign Assets Control Office
NOTICES
Additional Designation of Entities Pursuant to Executive Order 13382, 80513–80514

Foreign-Trade Zones Board
NOTICES
Grant of Authority for Subzone Status:
Haliburton Energy Services, Inc. (Barite Milling), New Orleans, LA, 80363
Grants of Authority for Subzone Status:
Haliburton Energy Services, Inc. (Barite Milling), Westlake, LA, 80363–80364
Hawker Beechcraft Corp. (Aircraft Manufacturing), Wichita and Salina, KS, 80364

Forest Service
RULES
National Forest System Land Management Planning; Correction, 80299–80300

Health and Human Services Department
See Agency for Healthcare Research and Quality
See Centers for Disease Control and Prevention
See Centers for Medicare & Medicaid Services
See National Institutes of Health

Homeland Security Department
See Coast Guard
See U.S. Citizenship and Immigration Services

Housing and Urban Development Department
RULES
Standards for Mortgagor's Investment in Mortgaged Property:
Compliance with Court Order Vacating Final Rule, 80297–80298
NOTICES
Federal Property Suitable as Facilities to Assist the Homeless, 80420

Interior Department
See Fish and Wildlife Service

See Land Management Bureau
See National Park Service

International Trade Administration
NOTICES
Antidumping:
Certain Cased Pencils from the People's Republic of China, 80364–80365
Certain Pasta from Italy, 80365
Circular Welded Non Alloy Steel Pipe from the Republic of Korea, 80365–80366
Lined Paper Products from China, 80366–80367

International Trade Commission
NOTICES
Investigation:
Certain Ground Fault Circuit Interrupters and Products Containing Same, 80426–80427

Justice Department
See Alcohol, Tobacco, Firearms, and Explosives Bureau
See Antitrust Division
See Drug Enforcement Administration
NOTICES
Stipulated Orders:
Commonwealth Utilities Corporation and the Commonwealth of the Northern Mariana Islands, 80427

Labor Department
See Mine Safety and Health Administration
NOTICES
Agency Information Collection Activities; Proposals, Submissions, and Approvals, 80432–80433

Land Management Bureau
NOTICES
Alaska Native Claims Selections, 80423
Proposed Reinstatement of Terminated Oil and Gas Leases (OKNM 117608 and OKNM 117609), 80423

Maritime Administration
NOTICES
Agency Information Collection Activities; Proposals, Submissions, and Approvals, 80510

Mine Safety and Health Administration
RULES
Flame-Resistant Conveyor Belt, Fire Prevention and Detection, and Use of Air from the Belt Entry, 80580–80616
Refuge Alternatives for Underground Coal Mines, 80656–80700
NOTICES
Petitions for Modification of Existing Mandatory Safety Standards, 80433–80436

National Archives and Records Administration
NOTICES
Records Schedules; Availability and Request for Comments, 80436–80437

National Institutes of Health
NOTICES
Meetings:
Center for Scientific Review, 80417–80418
Eunice Kennedy Shriver National Institue of Child Health and Human Development, 80418
National Library of Medicine, 80418

National Oceanic and Atmospheric Administration
RULES
Fisheries of the Exclusive Economic Zone Off Alaska:
Revised Management Authority for Dark Rockfish in the Bering Sea and Aleutian Islands Management Area and the Gulf of Alaska, 80307–80312
Fisheries of the Northeastern United States:
Atlantic Sea Scallop Fishery; Closure of the Limited Access General Category Scallop Fishery to Individual Fishing Quota Scallop Vessels, 80306–80307
PROPOSED RULES
Magnuson-Stevens Act Provisions:
Fisheries off West Coast States; Pacific Coast Groundfish Fishery; 2009-2010 Biennial Specifications and Management Measures, 80516–80577
NOTICES
Marine Mammals:
Issuance of Permit Amendment, 80367
Meetings:
North Pacific Fishery Management Council, 80367

National Park Service
NOTICES
Meetings:
Native American Graves Protection and Repatriation Review Committee, 80423–80424
National Register of Historic Places:
Notification of Pending Nominations and Related Actions, 80425–80426
Weekly Listing of Historic Properties, 80424–80425

Natural Resources Conservation Service
NOTICES
Agency Information Collection Activities; Proposals, Submissions, and Approvals, 80362–80363

Navy Department
NOTICES
Privacy Act; Systems of Records, 80379–80382

Nuclear Regulatory Commission
NOTICES
Consideration of Issuance of Amendment to Facility Operating License:
STP Nuclear Operating Co., 80437–80440
Environmental Impact Statements; Availability, etc.:
Indian Point Nuclear Generating Unit Nos. 2 and 3, Buchanan, NY; License Renewal and Public Meeting, 80440
Omaha Public Power District, Fort Calhoun Station Unit No. 1, Washington County, NE, 80441–80442

Office of United States Trade Representative
See Trade Representative, Office of United States

Personnel Management Office
NOTICES
Agency Information Collection Activities; Proposals, Submissions, and Approvals, 80445–80447

Presidential Documents
PROCLAMATIONS
Trade:
Oman Free Trade Agreement; implementation (Proc. 8332), 80289–80291

ADMINISTRATIVE ORDERS
Democratic Republic of Congo, Rwanda, and Uganda; unexpected urgent humanitarian needs (Presidential Determination)
No. 2009-9 of December 18, 2008, 80293

Securities and Exchange Commission
PROPOSED RULES
Records Services, Fee Schedule, 80313–80314
NOTICES
Agency Information Collection Activities; Proposals, Submissions, and Approvals, 80447–80450
Application and Temporary Order:
Citigroup Global Markets Inc., et al., 80450–80452
UBS Securities LLC, et al., 80452–80454
Applications:
AdvisorShares Investments, LLC and AdvisorShares Trust, 80454–80457
Grail Advisors, LLC and Grail Advisors' Alpha ETF Trust, 80457–80464
Sun Life Assurance Company of Canada (U.S.), et al., 80464–80468
Self-Regulatory Organizations; Proposed Rule Changes:
Boston Stock Exchange, Inc., 80468–80481
Depository Trust Co., 80481–80482
Financial Industry Regulatory Authority, Inc., 80482–80483
International Securities Exchange, LLC, 80484–80485
NASDAQ Stock Market LLC, 80485–80488
New York Stock Exchange LLC, 80488–80494
NYSE Alternext US LLC, 80494–80504
NYSE Arca, Inc., 80504–80505

Social Security Administration
NOTICES
Agreement on Social Security Between the United States and the Czech Republic; Entry Into Force, 80505–80506
Rate for Assessment on Direct Payment Fees to Representatives (2009), 80506

State Department
NOTICES
List of Participating Countries and Entities Under the Clean Diamond Trade Act of 2003 and Section 2 of Executive Order (13312), 80506–80507

Surface Transportation Board
NOTICES
Abandonment Exemption:
CSX Transportation, Inc.; Niagara County, NY, 80510–80511
Intra-Corporate Family Transaction Exemption:
National Express Corp., 80511–80512
Lease and Operation Exemption:
U S Rail Corporation; Winamac Southern Railway Company and Kokomo Grain Co., Inc., 80512
Operation Exemption:
Morristown & Erie Railway Inc., d/b/a Stourbridge Railway; Stourbridge Railroad Co., 80512–80513

Trade Representative, Office of United States
NOTICES
WTO Dispute Settlement Proceeding:
United States - Anti-Dumping Administrative Reviews and Other Measures Related to Imports of Certain Orange Juice from Brazil, 80442–80443
United States - Antidumping Measures on Polyethylene Retail Carrier Bags from Thailand, 80443–80444
WTO Dispute Settlement Proceedings Regarding United States:
Definitive Anti-Dumping and Countervailing Duties on Certain Products from China, 80444–80445

Transportation Department
See Federal Aviation Administration
See Federal Railroad Administration
See Maritime Administration
See Surface Transportation Board
NOTICES
Applications for Certificate Authority:
Baltia Airlines, Inc., 80507
Applications for Certificates of Public Convenience and Necessity and Foreign Air Carrier Permits Filed Under Subpart B (Formerly Subpart Q), 80507–80508
Aviation Proceedings, Agreements filed, 80508–80509

Treasury Department
See Foreign Assets Control Office
NOTICES
List of Countries Requiring Cooperation with an International Boycott, 80513
Meetings:
Advisory Committee on the Ten-Year Framework for Energy and Environment, 80513

U.S. Citizenship and Immigration Services
NOTICES
Agency Information Collection Activities; Proposals, Submissions, and Approvals, 80420

Separate Parts In This Issue

Part II
Commerce Department, National Oceanic and Atmospheric Administration, 80516–80577

Part III
Labor Department, Mine Safety and Health Administration, 80580–80616

Part IV
Homeland Security Department, Coast Guard, 80618–80654

Part V
Labor Department, Mine Safety and Health Administration, 80656–80700

Reader Aids
Consult the Reader Aids section at the end of this issue for phone numbers, online resources, finding aids, reminders, and notice of recently enacted public laws.

To subscribe to the Federal Register Table of Contents LISTSERV electronic mailing list, go to http://listserv.access.gpo.gov and select Online mailing list archives, FEDREGTOC-L, Join or leave the list (or change settings); then follow the instructions.

CFR PARTS AFFECTED IN THIS ISSUE

A cumulative list of the parts affected this month can be found in the Reader Aids section at the end of this issue.

3 CFR

Proclamations:

8332 80289

Administrative Orders:

Presidential Determinations:

No. 2009-9 of December 18, 2008 80293

7 CFR

457 80295

14 CFR

39 80296

17 CFR

Proposed Rules:

200 80313

24 CFR

203 80297

30 CFR

6 80580
7 80656
14 80580
18 80580
48 80580
75 (2 documents) 80580, 80656

33 CFR

117 (2 documents) 80298, 80299
155 80618

34 CFR

Proposed Rules:

Ch. VI 80314

36 CFR

219 80299

40 CFR

52 80300
180 80301

Proposed Rules:

180 80317

42 CFR

405 80302
409 80302
410 80302
411 80302
413 80302
414 80302
415 80302
423 80302
424 80302
485 80302
486 80302
489 80302

47 CFR

73 (2 documents) 80305

Proposed Rules:

73 80332

49 CFR

Proposed Rules:

240 80349

50 CFR

648 80306
679 80307

Proposed Rules:

660 80516

Federal Register
Vol. 73, No. 251
Wednesday, December 31, 2008

Presidential Documents

Title 3—

The President

Proclamation 8332 of December 29, 2008

To Implement The United States-Oman Free Trade Agreement

By the President of the United States of America

A Proclamation

1. On January 19, 2006, the United States entered into the United States-Oman Free Trade Agreement (the ''Agreement''). The Congress approved the Agreement in section 101(a) of the United States-Oman Free Trade Agreement Implementation Act (the ''Implementation Act'') (Public Law 109–283, 120 Stat. 1191) (19 U.S.C. 3805 note).

2. Section 105(a) of the Implementation Act authorizes the President to establish or designate within the Department of Commerce an office that shall be responsible for providing administrative assistance to panels established under chapter 20 of the Agreement.

3. Section 201 of the Implementation Act authorizes the President to proclaim such modifications or continuation of any duty, such continuation of duty-free or excise treatment, or such additional duties, as the President determines to be necessary or appropriate to carry out or apply Articles 2.3, 2.5, 2.6, 3.2.8, and 3.2.9, and the schedule of duty reductions with respect to Oman set forth in Annex 2–B of the Agreement.

4. Consistent with section 201(a)(2) of the Implementation Act, Oman is to be removed from the enumeration of designated beneficiary developing countries eligible for the benefits of the Generalized System of Preferences (GSP) on the date the Agreement entered into force. Further, consistent with section 604 of the Trade Act of 1974, as amended (the ''1974 Act'') (19 U.S.C. 2483), I have determined that other technical and conforming changes to the Harmonized Tariff Schedule of the United States (HTS) are necessary to reflect that Oman is no longer eligible to receive the benefits of the GSP.

5. Section 202 of the Implementation Act sets forth certain rules for determining whether a good is an originating good for the purpose of implementing preferential tariff treatment provided for under the Agreement. I have decided that it is necessary to include these rules of origin, together with particular rules applicable to certain other goods, in the HTS.

6. Section 204 of the Implementation Act authorizes the President to take certain enforcement actions relating to trade with Oman in textile and apparel goods.

7. Subtitle B of title III of the Implementation Act authorizes the President to take certain actions in response to a request by an interested party for relief from serious damage or actual threat thereof to a domestic industry producing certain textile or apparel articles.

8. Executive Order 11651 of March 3, 1972, as amended, established the Committee for the Implementation of Textile Agreements (CITA), consisting of representatives of the Departments of State, the Treasury, Commerce and Labor, and the Office of the United States Trade Representative, with the representative of the Department of Commerce as Chairman, to supervise the implementation of textile trade agreements. Consistent with section 301 of title 3, United States Code, when carrying out functions vested in the

President by statute and assigned by the President to CITA, the officials collectively exercising those functions are all to be officers required to be appointed by the President with the advice and consent of the Senate.

9. Section 604 of the 1974 Act, as amended, authorizes the President to embody in the HTS the substance of relevant provisions of that Act, or other Acts affecting import treatment, and of actions taken thereunder, including the removal, modification, continuance, or imposition of any rate of duty or other import restriction.

NOW, THEREFORE, I, GEORGE W. BUSH, President of the United States of America, acting under the authority vested in me by the Constitution and the laws of the United States of America, including but not limited to section 604 of the 1974 Act; sections 105(a), 201, 202, and 204, and subtitle B of title III, of the Implementation Act; and section 301 of title 3, United States Code, and having made the determination under section 101(b) of the Implementation Act necessary for the exchange of notes, do hereby proclaim:

(1) In order to provide generally for the preferential tariff treatment being accorded under the Agreement, to set forth rules for determining whether goods imported into the customs territory of the United States are eligible for preferential tariff treatment under the Agreement, to provide certain other treatment to originating goods of Oman for the purposes of the Agreement, to provide tariff-rate quotas with respect to certain originating goods of Oman, to reflect Oman's removal from the enumeration of designated beneficiary developing countries for purposes of the GSP, and to make technical and conforming changes in the general notes to the HTS, the HTS is modified as set forth in Annex I of Publication 4050 of the United States International Trade Commission, entitled, *Modifications to the Harmonized Tariff Schedule of the United States Implementing the United States-Oman Free Trade Agreement* (Publication 4050), which is incorporated by reference into this proclamation.

(2) In order to implement the initial stage of duty elimination provided for in the Agreement and to provide for future staged reductions in duties for originating goods of Oman for purposes of the Agreement, the HTS is modified as provided in Annex II of Publication 4050, effective on the dates specified in the relevant sections of such publication and on any subsequent dates set forth for such duty reductions in that publication.

(3) The amendments to the HTS made by paragraphs (1) and (2) of this proclamation shall be effective with respect to goods entered, or withdrawn from warehouse for consumption, on or after the relevant dates indicated in Annex II of Publication 4050.

(4) The Secretary of Commerce is authorized to exercise my authority under section 105(a) of the Implementation Act to establish or designate an office within the Department of Commerce to carry out the functions set forth in that section.

(5) The CITA is authorized to exercise my authority under section 204 of the Implementation Act to exclude textile and apparel goods from the customs territory of the United States; to determine whether an enterprise's production of, and capability to produce, goods are consistent with statements by the enterprise; to find that an enterprise has knowingly or willfully engaged in circumvention; and to deny preferential tariff treatment to textile and apparel goods.

(6) The CITA is authorized to exercise the functions of the President under subtitle B of title III of the Implementation Act to review requests, and to determine whether to commence consideration of such requests; to cause to be published in the *Federal Register* a notice of commencement of consideration of a request and notice seeking public comment thereon; to determine whether imports of an Omani textile or apparel article are causing serious damage, or actual threat thereof, to a domestic industry producing an article

that is like, or directly competitive with, the imported article; and to provide relief from imports of an article that is the subject of such a determination.

(7) All provisions of previous proclamations and Executive Orders that are inconsistent with the actions taken in this proclamation are superseded to the extent of such inconsistency.

IN WITNESS WHEREOF, I have hereunto set my hand this twenty-ninth day of December, in the year of our Lord two thousand eight, and of the Independence of the United States of America the two hundred and thirty-third.

[FR Doc. E8–31234
Filed 12–30–08; 8:45 am]
Billing code 3195–W9–P

Federal Register
Vol. 73, No. 251
Wednesday, December 31, 2008

Presidential Documents

Title 3—

The President

Presidential Determination No. 2009–9 of December 18, 2008

Unexpected Urgent Humanitarian Needs Related to the Democratic Republic of Congo, Rwanda, and Uganda

Memorandum for the Secretary of State

By the authority vested in me by the Constitution and the laws of the United States, including sections 2 and 4(a)(1) of the Migration and Refugee Assistance Act of 1962 (the ''Act''), as amended, (22 U.S.C. 2601 and 2603) and section 301 of title 3, United States Code:

(1) I hereby determine, pursuant to section 2(c)(1) of the Act, that it is important to the national interest to furnish assistance under the Act in an amount not to exceed $6 million from the United States Emergency Refugee and Migration Assistance Fund, for the purpose of meeting unexpected and urgent refugee and migration needs related to humanitarian needs of Congolese refugees and internally displaced, including by contributions to international, governmental, and nongovernmental organizations and payment of administrative expenses of the Bureau of Population, Refugees, and Migration of the Department of State; and

(2) The functions of the President in relation to this memorandum under section 2(d) of the Act, and of establishing terms and conditions under section 2(c)(1) of the Act, are assigned to you, and you may further assign such functions to your subordinates, consistent with applicable law.

You are authorized and directed to publish this memorandum in the *Federal Register*.

THE WHITE HOUSE,
Washington, December 18, 2008

[FR Doc. E8–31237
Filed 12–30–08; 8:45 am]
Billing code 4710–10–P

Rules and Regulations

Federal Register
Vol. 73, No. 251
Wednesday, December 31, 2008

This section of the FEDERAL REGISTER contains regulatory documents having general applicability and legal effect, most of which are keyed to and codified in the Code of Federal Regulations, which is published under 50 titles pursuant to 44 U.S.C. 1510.

The Code of Federal Regulations is sold by the Superintendent of Documents. Prices of new books are listed in the first FEDERAL REGISTER issue of each week.

DEPARTMENT OF AGRICULTURE

Federal Crop Insurance Corporation

7 CFR Part 457

RIN 0563–AC15

Common Crop Insurance Regulations, Coverage Enhancement Option Provisions; Corrections

AGENCY: Federal Crop Insurance Corporation, USDA.

ACTION: Final rule; corrections.

SUMMARY: This document contains corrections to the final regulation that was published Monday, July 28, 2008 (73 FR 43607–43611). The regulation pertains to the Coverage Enhancement Option.

DATES: *Effective Date:* December 31, 2008.

FOR FURTHER INFORMATION CONTACT: Bill Klein, Risk Management Specialist, Product Management, Product Administration and Standards Division, Risk Management Agency, United States Department of Agriculture, Beacon Facility—Mail Stop 0812, PO Box 419205, Kansas City, MO 64141–6205, telephone (816) 926–7730.

SUPPLEMENTARY INFORMATION:

Background

The final regulation that is the subject of these corrections was intended to make permanent the Pilot Coverage Enhancement Option Provisions to be used in conjunction with the Common Crop Insurance Policy Basic Provisions and selected crop policies for ease of use and consistency of terms.

Need for Corrections

As published, the final regulation contained an error that may prove to be misleading and needs to be clarified.

The term ''total value of the insured crop'' defined in section 1 of the Coverage Enhancement Option is incorrect and should read ''total value of the insured crop by unit.'' The term ''total value of the insured crop by unit'' has replaced the term ''total value of the insured crop'' everywhere it appears in the Coverage Enhancement Option. This includes in the definition of the term ''CEO dollar amount of insurance,'' section 7, section 8(b) and paragraphs (b) and (c) in the example. This change ensures liability and indemnity determinations are on the same basis.

Also, in the definition of ''Total value of the insured crop by unit'' in section 1, the phrase ''and summing the total for all units,'' should be removed. This language could give the impression that when multiple units are involved, the value of all units should be added together. However, section 8 and the example are calculated on a unit basis so that bringing the value of other units into the calculation would result in an incorrect indemnity.

Crop Insurance, Coverage Enhancement Option

Correction of Publication

■ Accordingly, the 7 CFR part 457 is corrected as follows:

PART 457—COMMON CROP INSURANCE REGULATIONS

■ 1. The authority citation for 7 CFR part 457 is revised to read as follows:

Authority: 7 U.S.C. 1506(l) and 1506(o).

■ 2. § 457.172 is amended by revising in section 1 the definitions of ''CEO dollar amount of insurance,'' ''total value of the insured crop,'' section 7, section 8(b), and paragraphs (b) and (c) of the Example to read as follows:

§ 457.172 Coverage Enhancement Option.

* * * * *

1. Definitions.

* * * * *

CEO dollar amount of insurance—The value of the additional insurance coverage for each unit provided by the CEO, which is determined by multiplying the CEO coverage level by the total value of the insured crop by unit and subtracting the MPCI dollar amount of insurance.

* * * * *

Total value of the insured crop by unit—The value of the crop that is determined by dividing the MPCI dollar amount of insurance for each unit by the MPCI coverage level.

* * * * *

7. If you elect CEO and a MPCI indemnity is paid on any unit, CEO will pay a portion of the loss not paid under the deductible of the MPCI policy depending on the CEO coverage level you select (For example, if you selected a 50 percent MPCI coverage level, selected an 85 percent CEO coverage level, and had 60 percent loss of the insured crop, the total amount of indemnity paid under both the MPCI policy and the CEO would be equal to approximately 51 percent of the total value of the insured crop by unit). See the example in section 8.

* * * * *

8. * * *

* * * * *

(b) Determine the total value of the insured crop by unit;

* * * * *

Example:

* * * * *

(b) $120,000 MPCI dollar amount of insurance, divided by the MPCI coverage level of .50 results in $240,000 total value of the insured crop by unit;

(c) $240,000 total value of the insured crop by unit multiplied by the CEO coverage level .85, equals $204,000, and subtracting $120,000 MPCI dollar amount of insurance equals $84,000 CEO dollar amount of insurance;

* * * * *

Signed in Washington, DC, on December 23, 2008.

Eldon Gould,

Manager, Federal Crop Insurance Corporation.

[FR Doc. E8–31105 Filed 12–30–08; 8:45 am]

BILLING CODE 3410–08–P

DEPARTMENT OF TRANSPORTATION

Federal Aviation Administration

14 CFR Part 39

[Docket No. FAA–2008–1353; Directorate Identifier 2008–NE–46–AD; Amendment 39–15779; AD 2009–01–01]

RIN 2120–AA64

Airworthiness Directives; CFM International, S. A. CFM56–5B Series Turbofan Engines

AGENCY: Federal Aviation Administration (FAA), DOT.

ACTION: Final rule; request for comments.

SUMMARY: The FAA is adopting a new airworthiness directive (AD) for CFM International, S. A. CFM56–5B series turbofan engines. This AD requires reviewing exhaust gas temperature (EGT) monitoring records to determine EGT deterioration margin, and for airplanes where both engines have greater than 80° centigrade (C) deterioration of EGT margin, borescope-inspecting the high-pressure compressor (HPC) of both engines. This AD also requires removing from service any engine that does not pass the borescope inspection, and if both engines pass, removing and replacing one of the engines with an engine that has 80 °C or less deterioration of EGT margin. This AD also requires continuous monitoring of EGT margin on engines in service, to prevent two engines on an airplane from having greater than 80 °C of deterioration of EGT margin. This AD results from an Airbus A321 airplane powered by CFM56–5B1/P turbofan engines experiencing HPC stalls during climb out after takeoff. We are issuing this AD to prevent HPC stalls, which could prevent continued safe flight or landing.

DATES: This AD becomes effective December 31, 2008.

We must receive any comments on this AD by March 2, 2009.

ADDRESSES: Use one of the following addresses to comment on this AD:

- *Federal eRulemaking Portal:* Go to *http://www.regulations.gov* and follow the instructions for sending your comments electronically.
- *Mail:* U.S. Docket Management Facility, Department of Transportation, 1200 New Jersey Avenue, SE., West Building, Ground Floor, Room W12–140, Washington, DC 20590–0001.
- *Hand Delivery:* Deliver to Mail address above between 9 a.m. and 5 p.m., Monday through Friday, except Federal holidays.
- *Fax:* (202) 493–2251.

FOR FURTHER INFORMATION CONTACT: Stephen K. Sheely, Aerospace Engineer, Engine Certification Office, FAA, Engine and Propeller Directorate, 12 New England Executive Park, Burlington, MA 01803; e-mail: *stephen.k.sheely@faa.gov*; telephone (781) 238–7750; fax (781) 238–7199.

SUPPLEMENTARY INFORMATION: On December 15, 2008, an Airbus A321 airplane powered by CFM56–5B1/P turbofan engines experienced HPC stalls in both engines during climb out after takeoff. The flight crew restored power to both engines by retarding the throttles to flight idle. The crew continued the climb out phase of the flight, declared an emergency, and returned to the airport without incident. This condition, if not corrected, could result in HPC stalls, which could prevent continued safe flight or landing.

FAA's Determination and Requirements of This AD

The unsafe condition described previously is likely to exist or develop on other CFM International, S. A. CFM56–5B series turbofan engines of the same type design. For that reason, we are issuing this AD to prevent HPC stalls, which could prevent continued safe flight or landing. This AD requires the following:

- Reviewing EGT monitoring records to determine EGT deterioration margin; and
- For airplanes where both engines have greater than 80 °C deterioration of EGT margin, doing the following:
- Borescope-inspecting HPC stages 1, 3, 6, and 9 of both engines.
- Removing from service any engine that does not pass the borescope inspection; and
- If both engines pass the borescope inspection, then removing one of the engines from service and replacing it with an engine that has 80 °C or less deterioration of EGT margin.

FAA's Determination of the Effective Date

Since an unsafe condition exists that requires the immediate adoption of this AD, we have found that notice and opportunity for public comment before issuing this AD are impracticable, and that good cause exists for making this amendment effective in less than 30 days.

Interim Actions

These actions are interim actions and we anticipate further rulemaking actions in the future, including further action to address the remaining engines in service that are above 80 °C deterioration of EGT margin.

Comments Invited

This AD is a final rule that involves requirements affecting flight safety and was not preceded by notice and an opportunity for public comment; however, we invite you to send us any written relevant data, views, or arguments regarding this AD. Send your comments to an address listed under **ADDRESSES**. Include ''AD Docket No. FAA–2008–1353; Directorate Identifier 2008–NE–46–AD'' in the subject line of your comments. We specifically invite comments on the overall regulatory, economic, environmental, and energy aspects of the rule that might suggest a need to modify it.

We will post all comments we receive, without change, to *http://www.regulations.gov*, including any personal information you provide. We will also post a report summarizing each substantive verbal contact with FAA personnel concerning this AD. Using the search function of the Web site, anyone can find and read the comments in any of our dockets, including, if provided, the name of the individual who sent the comment (or signed the comment on behalf of an association, business, labor union, etc.). You may review the DOT's complete Privacy Act Statement in the **Federal Register** published on April 11, 2000 (65 FR 19477–78).

Examining the AD Docket

You may examine the AD docket on the Internet at *http://www.regulations.gov*; or in person at the Docket Operations office between 9 a.m. and 5 p.m., Monday through Friday, except Federal holidays. The AD docket contains this AD, the regulatory evaluation, any comments received, and other information. The street address for the Docket Operations office (telephone (800) 647–5527) is the same as the Mail address provided in the **ADDRESSES** section. Comments will be available in the AD docket shortly after receipt.

Authority for This Rulemaking

Title 49 of the United States Code specifies the FAA's authority to issue rules on aviation safety. Subtitle I, Section 106, describes the authority of the FAA Administrator. Subtitle VII, Aviation Programs, describes in more detail the scope of the Agency's authority.

We are issuing this rulemaking under the authority described in Subtitle VII, Part A, Subpart III, Section 44701, ''General requirements.'' Under that section, Congress charges the FAA with promoting safe flight of civil aircraft in

air commerce by prescribing regulations for practices, methods, and procedures the Administrator finds necessary for safety in air commerce. This regulation is within the scope of that authority because it addresses an unsafe condition that is likely to exist or develop on products identified in this rulemaking action.

Regulatory Findings

We have determined that this AD will not have federalism implications under Executive Order 13132. This AD will not have a substantial direct effect on the States, on the relationship between the national Government and the States, or on the distribution of power and responsibilities among the various levels of government.

For the reasons discussed above, I certify that this AD:

1. Is not a ''significant regulatory action'' under Executive Order 12866;

2. Is not a ''significant rule'' under the DOT Regulatory Policies and Procedures (44 FR 11034, February 26, 1979); and

3. Will not have a significant economic impact, positive or negative, on a substantial number of small entities under the criteria of the Regulatory Flexibility Act.

We prepared a summary of the costs to comply with this AD and placed it in the AD Docket. You may get a copy of this summary at the address listed under **ADDRESSES**.

List of Subjects in 14 CFR Part 39

Air transportation, Aircraft, Aviation safety, Safety.

Adoption of the Amendment

■ Under the authority delegated to me by the Administrator, the Federal Aviation Administration amends part 39 of the Federal Aviation Regulations (14 CFR part 39) as follows:

PART 39—AIRWORTHINESS DIRECTIVES

■ 1. The authority citation for part 39 continues to read as follows:

Authority: 49 U.S.C. 106(g), 40113, 44701.

§ 39.13 [Amended]

■ 2. The FAA amends § 39.13 by adding the following new airworthiness directive:

2009–01–01 CFM International, S. A.: Amendment 39–15779. Docket No. FAA–2008–1353; Directorate Identifier 2008–NE–46–AD.

Effective Date

(a) This airworthiness directive (AD) becomes effective December 31, 2008.

Affected ADs

(b) None.

Applicability

(c) This AD applies to CFM International, S. A. CFM56–5B1, –5B2, –5B4, –5B5, –5B6, –5B7, –5B1/P, –5B2/P, –5B3/P, –5B3/P1, –5B4/P, –5B5/P, –5B6/P, –5B7/P, –5B8/P, –5B9/P, –5B1/2P, –5B2/2P, –5B3/2P, –5B3/2P1, –5B4/2P, –5B6/2P, –5B4/P1, –5B4/2P1, and –5B9/2P turbofan engines. These engines are installed on, but not limited to, Airbus A318, A319, A320, and A321 series airplanes.

Unsafe Condition

(d) This AD results from an Airbus A321 airplane powered by CFM56–5B1/P turbofan engines experiencing high-pressure compressor (HPC) stalls during climb out after takeoff. We are issuing this AD to prevent HPC stalls, which could prevent continued safe flight or landing.

Compliance

(e) You are responsible for having the actions required by this AD performed within the compliance times specified unless the actions have already been done.

(f) Within 14 days of the effective date of this AD do the following:

(1) Review exhaust gas temperature (EGT) monitoring records to determine EGT deterioration margin.

(2) For airplanes where both engines have greater than 80° centigrade (C) deterioration of EGT margin, do the following:

(i) Borescope-inspect HPC stages 1, 3, 6, and 9 of both engines. Information on borescope inspection of the HPC can be found in the aircraft maintenance manual.

(ii) Remove from service any engine that does not pass the borescope inspection requirements found in the aircraft maintenance manual.

(iii) If both engines pass the borescope inspection, then remove one of the engines from service and replace it with an engine that has 80 °C or less deterioration of EGT margin.

(3) Continue monitoring EGT margin on engines in service, to prevent two engines on an airplane from having greater than 80 °C deterioration of EGT margin. Information on monitoring EGT can be found in CFM International, S. A. Service Bulletin (SB) No. CFM56–5B S/B 72–0722, dated December 22, 2008.

Interim Actions

(g) These actions are interim actions and we anticipate further rulemaking actions in the future, including further action to address the remaining engines in service that are above 80 °C deterioration of EGT margin.

Alternative Methods of Compliance (AMOCs)

(h) The Manager, Engine Certification Office, FAA, has the authority to approve AMOCs for this AD, if requested using the procedures found in 14 CFR 39.19.

Related Information

(i) Refer to MCAI EASA Airworthiness Directive 2008–0227–E, dated December 23, 2008, and CFM International, S. A. SB No. CFM56–5B S/B 72–0722, dated December 22, 2008, for related information.

(j) Contact CFM International, S. A., Technical Publications Department, 1 Neumann Way, Cincinnati, OH 45215; telephone (513) 552–2800; fax (513) 552–2816, for a copy of this service bulletin.

(k) Contact Airbus, 1 Rond Point Maurice Bellonte, 31707 Blagnac Cedex, France, for a copy of the aircraft maintenance manual.

(l) Contact Stephen K. Sheely, Aerospace Engineer, Engine Certification Office, FAA, Engine and Propeller Directorate, 12 New England Executive Park, Burlington, MA 01803; e-mail: *stephen.k.sheely@faa.gov*; telephone (781) 238–7750; fax (781) 238–7199, for more information about this AD.

Material Incorporated by Reference

(m) None.

Issued in Burlington, Massachusetts, on December 23, 2008.

Francis A. Favara,

Manager, Engine and Propeller Directorate, Aircraft Certification Service.

[FR Doc. E8–31189 Filed 12–30–08; 8:45 am]

BILLING CODE 4910–13–P

DEPARTMENT OF HOUSING AND URBAN DEVELOPMENT

24 CFR Part 203

[Docket No. FR–5087–F–05]

RIN 2502–AI52

Standards for Mortgagor's Investment in Mortgaged Property: Compliance With Court Order Vacating Final Rule

AGENCY: Office of the Assistant Secretary for Housing-Federal Housing Commissioner, HUD.

ACTION: Final rule.

SUMMARY: This final rule complies with a court order to vacate HUD's rule entitled ''Standards for Mortgagor's Investment in Mortgaged Property'' published on October 1, 2007.

DATES: *Effective Date:* January 30, 2009.

FOR FURTHER INFORMATION CONTACT: Margaret Burns, Director, Office of Single Family Program Development, Department of Housing and Urban Development, 451 Seventh Street, SW., Washington, DC 20410; telephone number 202–708–2121 (this is not a toll-free number). Persons with hearing or speech impairments may access this number through TTY by calling the toll-free Federal Information Relay Service at 800–877–8339.

SUPPLEMENTARY INFORMATION: Pursuant to the February 29, 2008, order of the U.S. District Court for the Eastern District of California in *Nehemiah Corporation of America* v. *Jackson, et al.,* No. S–07–2056 (E.D. Cal.), and the

March 5, 2008, order of the U.S. District Court for the District of Columbia in *Ameridream Inc., et al.,* v. *Jackson,* No. 07–1752 (D.D.C.) and *Penobscot Indian Nation, et al.,* v. *HUD,* No. 07–1282 (D.D.C.), which vacated the final rule entitled ''Standards for Mortgagor's Investment in Mortgaged Property'', published on October 1, 2007 (72 FR 56002), this final rule removes the regulation at 24 CFR 203.19, and reserves § 203.19.

Findings and Certifications

Justification for Final Rulemaking

In general, HUD publishes a rule for public comment before issuing a final rule, in accordance with its own regulations on rulemaking at 24 CFR part 10. Part 10, however, does provide, in § 10.1, for exceptions from that general rule where the HUD finds good cause to omit advance notice and public participation. The good cause requirement is satisfied when the prior public procedure is ''impracticable, unnecessary, or contrary to the public interest.'' HUD finds that good cause exists and prior public procedure is unnecessary because HUD has no discretion but to comply with the court order to vacate the October 1, 2007, final rule entitled, ''Standards for Mortgagor's Investment in Mortgaged Property.'' Public comment in this context would serve no purpose and is, therefore, unnecessary.

Environmental Review

A Finding of No Significant Impact was not required for the October 1, 2007 final rule. Under 24 CFR 50.19(b)(6), that rule was categorically excluded from the requirements of the National Environmental Policy Act (42 U.S.C. 4332 *et seq.*) and that categorical exclusion continues to apply.

Catalog of Federal Domestic Assistance

The Catalog of Federal Domestic Assistance Number for the principal Federal Housing Administration (FHA) single family mortgage insurance program is 14.117. This rule also applies through cross-referencing to FHA mortgage insurance for condominium units (14.133), and other smaller single family programs.

List of Subjects in 24 CFR Part 203

Loan programs—housing and community development, Mortgage insurance, Reporting and recordkeeping requirements.

■ Accordingly, the Department amends 24 CFR part 203, as follows:

PART 203—SINGLE FAMILY MORTGAGE INSURANCE

■ 1. The authority citation for part 203 continues to read as follows:

Authority: 12 U.S.C. 1709, 1710, 1715b, 1715z–16, and 1715u; 42 U.S.C. 3535(d).

§ 203.19 [Removed and Reserved]

■ 2. Section 203.19 is removed and reserved.

Dated: December 19, 2008.

Ronald Y. Spraker,

Acting General Deputy Assistant Secretary for Housing—Acting Deputy Federal Housing Commissioner.

[FR Doc. E8–31060 Filed 12–30–08; 8:45 am]

BILLING CODE 4210–67–P

DEPARTMENT OF HOMELAND SECURITY

Coast Guard

33 CFR Part 117

[USCG–2008–0864]

Drawbridge Operation Regulations; Raritan River, Arthur Kill, and Their Tributaries, New Jersey

AGENCY: Coast Guard, DHS.

ACTION: Notice of temporary deviation from regulations; request for comments.

SUMMARY: The Commander, First Coast Guard District, has issued a new temporary deviation from the regulation governing the operation of the Arthur Kill (AK) Railroad Bridge across Arthur Kill at mile 11.6 between Staten Island, New York and Elizabeth, New Jersey. This deviation is necessary to test a new operating rule for the bridge that will help determine the most equitable and safe solution to facilitate the present and anticipated needs of navigation and rail traffic. This deviation requires the AK Railroad Bridge to remain in the open position but allows the bridge owner/operator to schedule short bridge closure periods after first broadcasting advance notice to the marine community. This change from the previous deviation will consider the needs of navigation and allow marine interests to adjust their schedules around the bridge closure periods.

DATES: This deviation is effective from 12:01 a.m. on December 15, 2008 through June 12, 2009. Comments must be received by January 31, 2009.

ADDRESSES: Documents indicated in this preamble as being available in the docket are part of docket USCG–2008–0864 and are available online at *http://www.regulations.gov.* They are also available for inspection or copying at two locations: The Docket Management Facility (M–30), U.S. Department of Transportation, West Building Ground Floor, Room W12–140, 1200 New Jersey Avenue, SE., Washington, DC 20590, between 9 a.m. and 5 p.m., Monday through Friday, except Federal holidays, and the First Coast Guard District, Battery Park Building, One South Street, New York, NY 10004 between 8:30 a.m. and 4:30 p.m., Monday through Friday except Federal holidays.

FOR FURTHER INFORMATION CONTACT: Mr. Gary Kassof, Bridge Branch, (212) 668–7165.

SUPPLEMENTARY INFORMATION: The Arthur Kill Railroad Bridge (AK RR) has a vertical clearance of 31 feet at mean high water and 35 feet at mean low water in the closed position. The owner of the bridge, New York City Economic Development Corporation (NYCEDC), began a bridge rehabilitation program approximately 10 years ago, as part of the region's Full Freight Access Initiative.

Part of the Full Freight Access Initiative was to restore rail freight service across the bridge to and from the Staten Island Landfill facility (SIL) and the New York Container Terminal (formerly the Howland Hook Terminal). The AK Railroad Bridge rehabilitation project was completed in 2007 in anticipation of renewed rail operations requiring the passage of train traffic across the bridge. Trash trains have been traveling to and from the SIL since June 2007 and the revitalized New York Container Terminal has been receiving railroad freight traffic for the past year.

The operating rule for this bridge found at 33 CFR 117.747 is no longer applicable or necessary as it pertains to the AK RR because the AK RR had been maintained in the open position until last year due to the cessation of all railroad train traffic over the bridge.

Background and Purpose

Beginning with a temporary deviation entitled ''Drawbridge Operation Regulations; Raritan River, Arthur Kill, and Their Tributaries, NJ'' published on March 20, 2007 in the **Federal Register** (72 FR 12981), the Coast Guard published a series of three temporary deviations to test a variety of bridge operation schedules culminating in the most recent test deviation published on June 3, 2008 (73 FR 31610). The proposed and final temporary deviation will confirm the lessons learned from the previous tests, namely that shorter bridge closure periods complemented by close coordination between the

bridge operator and marine interests, and advance broadcast notice of intended bridge closures should satisfy the reasonable needs of navigation and allow freight rail operations to develop and grow.

Temporary Deviation To Be Established

The schedule considered in this notice would provide daily, unscheduled, bridge closures up to thirty minutes in duration.

This temporary deviation requires the AK RR to remain in the open position at all times except during periods when it is closed for the passage of rail traffic. Conrail, the bridge operator, has established a dedicated hot line at 973–690–2454 for coordination of anticipated bridge closures. Tide restrained, deep draft vessels shall call the hot line daily to advise of expected times of vessel transit through the AKRR. The bridge may not close for the passage of trains during any high tide period (2 hours before until ½ hour after predicted high tide at The Battery, New York) if deep draft, tide restrained vessels have advised Conrail of their intent to transit under the bridge. At least 90 minutes and again at 75 minutes prior to a bridge closure the bridge owner or operator shall issue a manual broadcast notice to mariners (minimum range of 15 miles) on channel 13/16, VHF–FM of its intent to close the bridge for up to thirty minutes. Beginning at 60 minutes prior to closure automated broadcasts must be repeated at 15 minute intervals and at 10 and 5 minutes prior to closure. The Coast Guard shall be informed via call to VTS–NY at 718–354–4088. Each day two bridge closures, each fifteen minutes in duration, separated by a thirty minute bridge open period are authorized to allow multiple train movements across the bridge over a short time interval. Vessels shall plan their transits around the announced closure period(s); however a request for up to a 30 minute delay in the bridge closure to allow navigation to meet tide or current requirements shall be granted if requested within 30 minutes after the initial broadcast. Requests received after the initial 30 minutes will not be granted; therefore marine interests should plan their transits carefully. The bridge owner/operator shall repeat the manual bridge closure notice via marine radio at 75 minutes prior to the scheduled closure then via manual or automated broadcast at 15 minute intervals until 15 minutes prior to the intended closure at which time notice of bridge closure will be broadcast every five minutes and once again as the bridge begins to close and appropriate sound signal given. In the event of bridge operational failure, the bridge owner or operator shall notify the Coast Guard Captain of the Port, New York immediately and shall ensure that a repair crew is on scene at the bridge no later than 45 minutes after the bridge fails to operate and that repair crew shall remain at the bridge until the bridge has been restored to normal operations or raised and locked in the fully open position.

This deviation from the operating regulations is authorized under 33 CFR 117.35.

Dated: December 10, 2008.

Gary Kassof,

Bridge Program Manager, First Coast Guard District.

[FR Doc. E8–31070 Filed 12–30–08; 8:45 am]

BILLING CODE 4910–15–P

DEPARTMENT OF HOMELAND SECURITY

Coast Guard

33 CFR Part 117

[USCG–2008–1187]

RIN 1625–AA09

Drawbridge Operation Regulations; Curtis Creek in Baltimore, MD, Maintenance

AGENCY: Coast Guard, DHS.

ACTION: Notice of temporary deviation from regulations.

SUMMARY: The Commander, Fifth Coast Guard District, has approved a temporary deviation from the regulations governing the operation of the Pennington Avenue Bridge, at mile 0.9, across Curtis Creek in Baltimore, MD. Under this temporary deviation, the drawbridge may remain in the closed position on specific dates and times to facilitate electrical repairs.

DATES: This deviation is effective from 6 a.m. on January 21, 2009, to 11:59 p.m. on January 27, 2009.

ADDRESSES: Documents indicated in this preamble as being available in the docket are part of docket USCG–2008–1187 and are available online at *http://www.regulations.gov.* They are also available for inspection or copying at two locations: The Docket Management Facility (M–30), U.S. Department of Transportation, West Building Ground Floor, Room W12–140, 1200 New Jersey Avenue, SE., Washington, DC 20590, between 9 a.m. and 5 p.m., Monday through Friday, except Federal holidays, and the Commander (dpb), Fifth Coast Guard District, Federal Building, 1st Floor, 431 Crawford Street, Portsmouth, VA 23704–5004 between 8 a.m. and 4 p.m., Monday through Friday, except Federal holidays.

FOR FURTHER INFORMATION CONTACT: Mr. Bill H. Brazier, Bridge Management Specialist, Fifth Coast Guard District, at (757) 398–6422.

SUPPLEMENTARY INFORMATION: The Maryland State Highway Administration, who owns and operates this double-leaf bascule drawbridge, has requested a temporary deviation from the current operating regulations set out in 33 CFR 117.5 that requires the bridge to open promptly and fully for the passage of vessels when a request to open is given to facilitate electrical repairs.

The Pennington Avenue Bridge, a double-leaf bascule, has a vertical clearance in the closed position to vessels of 38 feet, above mean high water.

To facilitate installation of submarine cables and electrical repairs, the drawbridge will be maintained in the closed-to-navigation position from 6 a.m. on January 21, 2009, until and including 11:59 p.m. on January 27, 2009.

The Coast Guard will inform the users of the waterway through our Local and Broadcast Notices to Mariners of the opening restrictions of the draw span to minimize transiting delays caused by the temporary deviation.

In accordance with 33 CFR 117.35(e), the drawbridge must return to its regular operating schedule immediately at the end of the designated time period. This deviation from the operating regulations is authorized under 33 CFR 117.35.

Dated: December 15, 2008.

Waverly W. Gregory, Jr.,

Chief, Bridge Administration, Branch Fifth Coast Guard District.

[FR Doc. E8–31073 Filed 12–30–08; 8:45 am]

BILLING CODE 4910–15–P

DEPARTMENT OF AGRICULTURE

Forest Service

36 CFR Part 219

RIN 0596–AB86

National Forest System Land Management Planning; Correction

AGENCY: Forest Service, USDA.

ACTION: Correcting amendment.

SUMMARY: This document makes technical corrections Forest Service regulations concerning the

administrative review procedures that the responsible official may use in some cases when approving plans, plan amendments, or plan revisions during the transition period for the rule. A final rule was published in volume 73 of the **Federal Register**, page 21468, April 21, 2008. This document makes corrections to the April 21 rule.

DATES: *Effective Date:* These corrections are effective December 31, 2008.

ADDRESSES: Written inquiries about this correction notice may be sent to the Director, Ecosystem Management Coordination Staff, USDA Forest Service, 1400 Independence Ave., SW., Mailstop Code 1104, Washington, DC 20250–1104.

FOR FURTHER INFORMATION CONTACT: Ecosystem Management Coordination Staff's Planning Specialist Regis Terney at (202) 205–1552.

SUPPLEMENTARY INFORMATION:

Background

In volume 73 of the **Federal Register**, page 21468, April 21, 2008 (73 FR 21468) the United States Department of Agriculture (Department) published a final rule setting forth directions for developing, amending, revising, and monitoring land management plans (the planning rule). On May 27, 2008, the Office of the Federal Register informed the Department that citing ''36 CFR 217'' in the Code of Federal Regulations (CFR) was not appropriate because ''36 CFR 217'' no longer exists. Currently, part 219 refers several times to the administrative review procedures ''at 36 CFR part 217 in effect prior to November 9, 2000 (see 36 CFR parts 200 to 299, revised as of July 1, 2000).''

Need for Correction

These Code of Federal Regulations references must be removed because (1) they refer to an outdated edition of the CFR, (2) part 217 has not been codified in the CFR since 2000, and (3) the reference is confusing to people who will not find part 217 in the CFR. Therefore the Department is issuing a technical correction to section 219.14(b)(2) and section 219.14(b)(3)(iii) of the planning rule.

The planning rule's transition provisions, at 36 CFR 219.14(b), allow a responsible official to provide either objection procedures, as provided by section 219.13 of the planning rule, or the administrative appeal procedures formerly codified under 36 CFR part 217 for administrative review of land management plans or plan amendments in some situations. In the place of ''36 CFR part 217'' in the corrected rule, the Department cites the **Federal Register** notices for the procedures formerly codified at 36 CFR part 217.

The Department identifies these procedures as the ''optional appeal procedures available during the planning rule transition period.'' This format eliminates references to the previous coding of the administrative appeal and review procedures in the CFR to avoid confusion as to the proper status of those procedures. The ''optional appeal procedures available during the planning rule transition period,'' are 54 FR 3357 (January 23, 1989), as amended at 54 FR 13807 (April 5, 1989); 54 FR 34509 (August 21, 1989); 55 FR 7895 (March 6, 1990); 56 FR 4918 (February 6, 1991); 56 FR 46550 (September 13, 1991); and 58 FR 58915 (November 4, 1993). The ''optional appeal procedures available during the planning rule transition period,'' are available at *http://www.fs.fed.us/emc/applit/includes/PlanAppealProceduresDuringTransition.pdf.*

List of Subjects in 36 CFR Part 219

Administrative practice and procedure, Environmental impact statements, Indians, Intergovernmental relations, National forests, Reporting and recordkeeping requirements, Science and technology.

■ Accordingly, 36 CFR part 219 is corrected by making the following correcting amendments:

PART 219—PLANNING

■ 1. The authority citation for subpart A continues to read as follows:

Authority: 5 U.S.C. 301; 16 U.S.C. 1604, 1613.

Subpart A—National Forest System Land Management Planning

■ 2. In § 219.14 revise paragraphs (b)(2) and (b)(3)(iii) to read as follows:

§ 219.14 Effective dates and transition.

* * * * *

(b) * * *

(2) *Plan Amendments.* With respect to plans approved or revised pursuant to the planning regulation in effect before November 9, 2000, (see 36 CFR parts 200 to 299, Revised as of July 1, 2000), a 3-year transition period for plan amendments begins on April 21, 2008. During the transition period, plan amendments may continue using the provisions of the planning regulation in effect before November 9, 2000, or may conform to the requirements of this subpart. If the responsible official uses the provisions of the prior planning regulations, the responsible official may elect to use either the objection procedures of this subpart or the optional appeal procedures available during the planning rule transition period. The optional appeal procedures available during the planning rule transition period are published at 54 FR 3357 (January 23, 1989), as amended at 54 FR 13807 (April 5, 1989); 54 FR 34509 (August 21, 1989); 55 FR 7895 (March 6, 1990); 56 FR 4918 (February 6, 1991); 56 FR 46550 (September 13, 1991); and 58 FR 58915 (November 4, 1993). Plan amendments initiated after the transition period must conform to the requirements of this subpart.

(3) * * *

(iii) Except when a plan amendment is approved contemporaneously with a project or activity and applies only to that project or activity (in a way that 36 CFR part 215 or part 218, subpart A apply), the responsible official may elect to use either the objection procedures of this subpart or the optional appeal procedures available during the planning rule transition period. The optional appeal procedures available during the planning rule transition period are published at 54 FR 3357 (January 23, 1989), as amended at 54 FR 13807 (April 5, 1989); 54 FR 34509 (August 21, 1989); 55 FR 7895 (March 6, 1990); 56 FR 4918 (February 6, 1991); 56 FR 46550 (September 13, 1991); and 58 FR 58915 (November 4, 1993).

* * * * *

Dated: December 24, 2008.

Hank Kashdan,

Deputy Chief, Business Operations.

[FR Doc. E8–31165 Filed 12–30–08; 8:45 am]

BILLING CODE 3410–11–P

ENVIRONMENTAL PROTECTION AGENCY

40 CFR Part 52

[FRL–8759–5]

Clean Air Act Prevention of Significant Deterioration (PSD) Construction Permit Program; Interpretation of Regulations That Determine Pollutants Covered by the Federal PSD Permit Program

AGENCY: Environmental Protection Agency (EPA).

ACTION: Notice of issuance of the Administrator's interpretation.

SUMMARY: On December 18, 2008, the Administrator issued an interpretive memorandum entitled ''EPA's Interpretation of Regulations That Determine Pollutants Covered by Federal Prevention of Significant Deterioration (PSD) Permit Program.'' This memorandum clarifies the scope of

the EPA regulation that determines the pollutants subject to the Federal PSD program under the Clean Air Act (Act). Under Title I, Part C of the Act, the PSD program preconstruction permit requirement applies to any new major stationary source or modified existing major stationary source of regulated air pollutants located in an area that is either attaining the National Ambient Air Quality Standards (NAAQS) or unclassifiable. Under the Federal PSD permitting regulations, only new or modified major sources that emit one or more ''regulated NSR pollutants,'' as that term is defined in the regulations, are subject to the requirements of the PSD program, including the requirement to install the best available control technology (BACT) for those regulated NSR pollutants that the facility has the potential to emit in significant amounts. This memorandum contains EPA's definitive interpretation of ''regulated NSR pollutant'' and is intended to resolve any ambiguity in the definition, which includes ''any pollutant that otherwise is subject to regulation under the Act.'' As of the date of the memorandum, EPA interprets this definition of ''regulated NSR pollutant'' to exclude pollutants for which EPA regulations only require monitoring or reporting but include all pollutants subject to a provision in the Act or regulation adopted by EPA under the Act that requires actual control of emissions of that pollutant.

FOR FURTHER INFORMATION CONTACT: Mike Sewell, Office of Air Quality Planning and Standards, Air Quality Policy Division (C 504–03), Environmental Protection Agency, 109 TW Alexander Drive, Research Triangle Park, NC 27709; telephone number: (919) 541–0873; fax number: (919) 541–5509; e-mail address: *sewell.mike@epa.gov.*

SUPPLEMENTARY INFORMATION:

I. General Information

A. How Can I Get Copies of This Document and Other Related Information?

1. *Electronic Access.* You may access this **Federal Register** document electronically through the EPA Internet under the ''Federal Register'' listings at *http://www.epa.gov/fedrgstr/.* You may access the memorandum at *http://www.epa.gov/nsr.*

Statutory and Executive Orders

This action is not a rule as defined by Executive Order 12866. Therefore, it is exempt from review by the Office of Management and Budget as required for rules and regulations under Executive Order 12866.

In addition, this is not a rule as defined by the Regulatory Flexibility Act, 5 U.S.C. section (601)(2). Therefore, EPA has not prepared a regulatory flexibility analysis addressing the impact of this action on small business activities.

Judicial Review

Because we have designated this interpretation as nationally significant under section 307(b) of the Act, challenges must be brought to the United States Court of Appeals for the District of Columbia Circuit by March 2, 2009.

Dated: December 23, 2008.

Robert J. Meyers,

Principal Deputy Assistant Administrator.

[FR Doc. E8–31114 Filed 12–30–08; 8:45 am]

BILLING CODE 6560–50–P

ENVIRONMENTAL PROTECTION AGENCY

40 CFR Part 180

[EPA–HQ–OPP–2007–0674; FRL–8393–9]

2, 4-D, Bensulide, Chlorpyrifos, DCPA, Desmedipham, Dimethoate, Fenamiphos, Metolachlor, Phorate, Sethoxydim, Terbufos, Tetrachlorvinphos, and Triallate; Technical Amendment

AGENCY: Environmental Protection Agency (EPA).

ACTION: Final rule; technical amendment.

SUMMARY: EPA issued a final rule in the **Federal Register** of September 17, 2008, concerning the modification of certain tolerances for a number of pesticides including the herbicides DCPA and sethoxydim as a follow-up to the Agency's reregistration program under the Federal Insecticide, Fungicide, and Rodenticide Act (FIFRA) and tolerance reassessment program under the Federal Food, Drug, and Cosmetic Act (FFDCA). This document corrects clerical errors made in the final rule.

DATES: This final rule is effective December 31, 2008.

ADDRESSES: EPA has established a docket for this action under docket identification (ID) number EPA–HQ–OPP–2007–0674. All documents in the docket are listed in the docket index available in *http://www.regulations.gov.* Although listed in the index, some information is not publicly available, e.g., Confidential Business Information (CBI) or other information whose disclosure is restricted by statute. Certain other material, such as copyrighted material, is not placed on the Internet and will be publicly available only in hard copy form. Publicly available docket materials are available in the electronic docket at *http://www.regulations.gov*, or, if only available in hard copy, at the OPP Regulatory Public Docket in Rm. S–4400, One Potomac Yard (South Bldg.), 2777 S. Crystal Dr., Arlington, VA. The Docket Facility is open from 8:30 a.m. to 4 p.m., Monday through Friday, excluding legal holidays. The Docket Facility telephone number is (703) 305–5805.

FOR FURTHER INFORMATION CONTACT: Jane Smith, Special Review and Reregistration Division (7508P), Office of Pesticide Programs, Environmental Protection Agency, 1200 Pennsylvania Ave., NW., Washington, DC 20460–0001; telephone number: (703) 308–0048; e-mail address: *smith.jane-scott@epa.gov.*

SUPPLEMENTARY INFORMATION:

I. General Information

A. Does this Action Apply to Me?

The Agency included in the final rule a list of those who may be potentially affected by this action. If you have questions regarding the applicability of this action to a particular entity, consult the person listed under **FOR FURTHER INFORMATION CONTACT.**

B. How Can I Access Electronic Copies of this Document and Other Related Information?

In addition to accessing electronically available documents at *http://www.regulations.gov*, you may access this **Federal Register** document electronically through the EPA Internet under the ''**Federal Register**'' listings at *http://www.epa.gov/fedrgstr.*

II. What Does this Amendment Do?

FR Doc. E8–21589 published in the **Federal Register** of September 17, 2008 (73 FR 53732) (FRL–8375–2), is corrected as follows:

1. On page 53737, under § 180.185(a), in the table, the tolerance for ''vegetable, brassica, leafy, group 5'' is corrected to read 5.0 ppm. (EPA proposed a 5.0 ppm tolerance on February 6, 2008 (73 FR 6867) (FRL–8345–2), and received no comments on that proposed tolerance, but through typographical error the tolerance was listed at 0.05 ppm in the final rule. This technical amendment corrects that error.)

2. On page 53742, under § 180.412(a), the table is corrected to include the following tolerances which were

inadvertently omitted: Crambe, meal at 40.0 ppm; crambe, seed at 35.0 ppm; cuphea, seed at 35.0 ppm; echium, seed at 35.0 ppm; gold of pleasure, meal at 40.0 ppm; gold of pleasure, seed at 35.0 ppm; hare's ear mustard, seed at 35.0 ppm; lesquerella, seed at 35.0 ppm; lunaria, seed at 35.0 ppm; meadowfoam, seed at 35.0 ppm; milkweed, seed at 35.0 ppm; mustard, seed at 35.0 ppm; oil radish, seed at 35.0 ppm; poppy, seed at 35.0 ppm; sesame, seed at 35.0 ppm; and sweet rocket, seed at 35.0 ppm. (These oil seed commodity tolerances for sethoxydim were published in the **Federal Register** of July 9, 2008 (73 FR 39256) (FRL–8370–9). When EPA published the September 17, 2008 (73 FR 53732), final rule pertaining to sethoxydim tolerances for other commodities, the amendatory language in the final rule mistakenly omitted the tolerances finalized on July 9, 2008, rather than adding to them, as had been intended. EPA has not proposed revoking these tolerances. This technical amendment corrects that error).

III. Why is this Amendment Issued as a Final Rule?

Section 553 of the Administrative Procedure Act (APA), 5 U.S.C. 553(b)(B), provides that, when an Agency for good cause finds that notice and public procedure are impracticable, unnecessary or contrary to the public interest, the Agency may issue a final rule without providing notice and an opportunity for public comment. EPA has determined that there is good cause for making today's technical amendment final without prior proposal and opportunity for comment, because the erroneous changes being corrected were the result of clerical error, and were neither proposed nor commented upon. Notice and comment is therefore unnecessary.

IV. Do Any of the Statutory and Executive Order Reviews Apply to this Action?

No. This action only corrects typographical omissions and errors for a previously published final rule and does not impose any new requirements. EPA's compliance with the statues and Executive Orders for the underlying rule is discussed in Unit VI. of the final rule published September 17, 2008 (73 FR 53732).

V. Congressional Review Act

The Congressional Review Act, 5 U.S.C. 801 *et seq.*, generally provides that before a rule may take effect, the Agency promulgating the rule must submit a rule report to each House of the Congress and to the Comptroller General of the United States. EPA will submit a report containing this rule and other required information to the U.S. Senate, the U.S. House of Representatives, and the Comptroller General of the United States prior to publication of this final rule in the **Federal Register**. This final rule is not a ''major rule'' as defined by 5 U.S.C. 804(2).

List of Subjects in 40 CFR Part 180

Environmental protection, Administrative practice and procedure, Agricultural commodities, Pesticides and pests, Reporting and recordkeeping requirements.

Dated: December 22, 2008.

Debra Edwards,

Director, Office of Pesticide Programs.

■ Therefore, 40 CFR part 180 is amended as follows:

PART 180—[AMENDED]

■ 1. The authority citation for part 180 continues to read as follows:

Authority: 21 U.S.C. 321(q), 346a and 371.

■ 2. Section 180.185 is amended by revising the entry for ''Vegetable, brassica, leafy, group 5'' in the table in paragraph (a) to read as follows:

§ 180.185 DCPA; tolerances for residues.

(a) *General.* * * *

Commodity	Parts per million
* * * *	*
Vegetable, brassica, leafy, group 5	5.0
* * * *	*

* * * * *

■ 3. Section 180.412 is amended by alphabetically adding the following commodities to the table in paragraph (a) to read as follows:

§ 180.412 Sethoxydim; tolerances for residues.

(a) *General.* * * *

Commodity	Parts per million
* * * *	*
Crambe, meal	40.0
Crambe, seed	35.0
* * * *	*
Cuphea, seed	35.0
* * * *	*
Echium, seed	35.0
* * * *	*
Gold of pleasure, meal	40.0
Gold of pleasure, seed	35.0
* * * *	*
Hare's ear mustard, seed	35.0
* * * *	*
Lesquerella, seed	35.0
* * * *	*
Lunaria, seed	35.0
Meadowfoam, seed	35.0
* * * *	*
Milkweed, seed	35.0
Mustard, seed	35.0
* * * *	*
Oil radish, seed	35.0
* * * *	*
Poppy, seed	35.0
* * * *	*
Sesame, seed	35.0
* * * *	*
Sweet rocket, seed	35.0
* * * *	*

* * * * *

[FR Doc. E8–31010 Filed 12–30–08; 8:45 am]

BILLING CODE 6560–50–S

DEPARTMENT OF HEALTH AND HUMAN SERVICES

Centers for Medicare & Medicaid Services

42 CFR Parts 405, 409, 410, 411, 413, 414, 415, 423, 424, 485, 486, and 489

[CMS–1403–CN2]

RIN 0938–AP18

Medicare Program; Payment Policies Under the Physician Fee Schedule and Other Revisions to Part B for CY 2009; E-Prescribing Exemption for Computer Generated Facsimile Transmissions; Corrections

AGENCY: Centers for Medicare & Medicaid Services (CMS), HHS.

ACTION: Correction of final rule with comment period.

SUMMARY: This document corrects several technical and typographical errors in the final rule with comment period that appeared in the November 19, 2008 **Federal Register** entitled ''Medicare Program; Payment Policies Under the Physician Fee Schedule and Other Revisions to Part B for CY 2009; E-Prescribing Exemption for Computer-Generated Facsimile Transmissions; and Payment for Certain Durable Medical Equipment, Prosthetics, Orthotics, and Supplies (DMEPOS); Final Rule'' (73 FR 69726).

DATES: *Effective Date:* This correction notice is effective January 1, 2009.

FOR FURTHER INFORMATION CONTACT: Diane Milstead, (410) 786–3355.

SUPPLEMENTARY INFORMATION:

I. Background

In FR Doc. E8–26213 of November 19, 2008 (73 FR 69726) (hereinafter referred to as the CY 2009 PFS final rule with comment period), there were a number of technical and typographical errors that are identified and corrected in the Correction of Errors section of this notice. The provisions of this notice are effective as if they had been included in the CY 2009 PFS final rule with comment period. Accordingly, the corrections are effective January 1, 2009.

II. Summary of Errors

A. Errors in the Preamble

On pages 69738 and 69739, we are correcting a typographical error in the discussion concerning submission of information for supply and equipment items. In addition, in Table 2, we are correcting the reference to a code number that appears in that table, as well as typographical errors that appear in the footnotes for Tables 2 and 3. We are also correcting the reference to two code numbers that appear in Table 5.

On pages 69764, 69765, 69801, 69856, 69867, 69868, and 69869, we are correcting typographical errors.

On page 69857, we are deleting a sentence which refers incorrectly to a revision to the regulation.

On page 69866, we are adding a footnote that was referenced but inadvertently not included.

On page 69899, we are adding CPT 78414 to our summary of deleted codes. This code does not involve imaging and, therefore, should not be included in the category of ''Radiology and Certain Other Imaging Services.''

On page 69900, Table 30, we are adding two codes to the list of deletions. Under the heading of ''Clinical Laboratory Services,'' we are adding HCPCS code G0394 and its short descriptor because this code will be terminated December 31, 2008. Under the heading of ''Radiology and Certain Other Imaging Services,'' we are adding in numerical order CPT code 78414 and its short descriptor.

B. Errors in the Regulations Text

The regulations text contained minor typographical and technical errors; therefore, we are not summarizing the individual errors in this section.

C. Errors in the Addenda

On pages 69956, 70007, 70024, 70051, 70088, and 70122 of Addendum B, Relative Value Units and Related Information Used in Determining Medicare Payments for 2009, the PE RVUs listed for CPT codes 20697, 37205, 37206, 47525 and 76775–26 are corrected. In addition the global periods for the CPT codes 47525, 63650, 63685, 63688, and 93352 are corrected.

On pages 70147, 70148, 70149 and 70151 of Addendum C, Codes with Interim RVUs, the PE RVUS listed for CPT code 26097 are corrected and the global period for CPT codes 47525, 63650, 63685, 63688, and 93352 are corrected.

On page 70215, Addendum J, we are deleting HCPCS code G0394 and its short descriptor.

On page 70226, Addendum J, we are deleting CPT 78414 and its short descriptor.

III. Correction of Errors

A. Corrections to the Preamble

1. On page 69738:

a. In the 1st column, in the 1st partial paragraph, line 2, the phrase ''items for some each of the'' is corrected to read ''items for some of the''.

b. In Table 2, Supply Items Needing Specialty Input for Pricing, in column 6, lines 1 and 2, the CPT code ''50395'' is corrected to read ''50593''.

c. In the footnote to Table 2, line 5, the phrase ''In these instances only'' is corrected to read ''In instances where only''.

2. On page 69739:

a. In the footnote to Table 3, line 5, the phrase ''In these instances only'' is corrected to read ''In instances where only''.

b. In the footnote to Table 3, line 15 (item B.), the phrase '' No/insufficient received.'' is corrected to read ''No/Insufficient information received.''

c. In Table 5, in the 5th column, line 2, the CPT codes ''93693 and 93696'' are corrected to read ''93293 and 93296''.

3. On page 69764, in the 3rd column, 1st full paragraph:

a. Lines 1 and 2, the sentence ''We disagree with the commenter.'' is removed.

b. Line 5, the phrase ''imaging services'' is corrected to read ''testing services.''

4. On page 69765, in the 1st column:

a. In the 1st paragraph, line 2, the phrase ''commenters' concerns and we'' is corrected to read ''commenters' concerns, but we.''

b. In the 5th paragraph, the phrase ''commenters' concerns and we'' is corrected to read ''commenters' concerns, but we.''

5. On page 69801, in the 1st column, in the 2nd full paragraph, line 40, the phrase ''PC be an employee or independent'' is corrected to read ''PC be an owner, employee, or independent''.

6. On page 69856, in the 2nd column, in the 1st partial paragraph, line 8, the phrase ''beneficiaries who's OSA'' is corrected to read ''beneficiaries whose OSA''.

7. On page 69857, in the 1st column, in the 2nd full paragraph, lines 7 through 11, the sentence ''In addition, we are adding a new paragraph (g), which would create an exception to the prohibition contained in (f) if the sleep test is an attended facility-based PSG.'' is deleted.

8. On page 69866, in the 3rd column:

a. In the 1st partial paragraph, line 12, the footnote annotation ''2'' is corrected to read ''2A''.

b. In the footnotes, the following footnote is added in numerical order ''[2A] Dartmouth Atlas of Healthcare. 2005 Medicare reimbursement figures derived from Hospital Service Area (HSA).''

9. On page 69867, in the 2nd column, in the 3rd full paragraph, lines 15 and 16, the phrase ''high cost, of a high volume,'' is corrected to read ''high cost, high volume,''.

10. On page 69868:

a. In the 2nd column, in the 1st partial paragraph, line 16, the phrase ''approach to data for Phase 1,'' is corrected to read ''approach used for Phase 1,''.

b. In the 2nd column, in the 1st full paragraph, line 6, the phrase ''high cost, a high volume,'' is corrected to read ''high cost, high volume,''.

c. In the 3rd column, in the 1st paragraph, lines 22 through 23, the phrase ''data was available'' is corrected to read ''data were not available''.

11. On page 69869, in the 1st column:

a. In the 1st partial paragraph, lines 7 through 8, the phrase ''In addition, to including'' is corrected to read ''In addition to including''.

b. In the 2nd full paragraph, line 3, the phrase '' of the program as'' is corrected to read ''of the program, as''.

12. On page 69899, in the 3rd column, in the 3rd paragraph, lines 5 and 6, the phrase ''CPT codes 78000, 78001, and 78003'' is corrected to read ''CPT codes 78000, 78001, 78003, and 78414''.

13. On page 69900, in the 1st column, Table 30: Deletions to the Physician Self-Referral List of CPT[1]/HCPCS Codes:

a. Under the heading of ''Clinical Laboratory Services,'' HCPCS code G0394 and its short descriptor are added as the last entry to read as follows:

CLINICAL LABORATORY SERVICES

G0394	Blood occult test, colorectal.

b. Under the heading of ''Radiology and Certain Other Imaging Services,'' CPT code 78414 and its short descriptor are added in numerical order to read as follows:

RADIOLOGY AND CERTAIN OTHER IMAGING SERVICES	
78414	Non-imaging heart function.

B. Corrections to the Regulation Text

1. On page 69933, in § 410.33:

a. In paragraph (g)(16), the phrase ''imaging services'' is corrected to read ''testing services''.

b. In paragraph (g)(17), the phrase ''part of a hospital service provided under arrangement with that hospital'' is corrected to read ''part of a service provided under arrangement as described in section 1861(w)(1) of the Act''.

2. On page 69934, in § 411.15, in paragraph (p)(2)(xii), the phrase ''paragraphs (k)(15)(i) thorugh (vi) of this section'' is corrected to read ''subparagraphs (p)(2)(i) through (vi) of this section''.

3. On page 69936, in § 414.210, in amendatory instruction #26, the statement ''E. Adding paragraph (e)(3)(iv).'' is added in alphabetical order.

4. On page 69937, in § 414.904, amendatory instruction #31 is revised to read

''Section 414.904 is amended by—

a. Revising paragraphs (b)(2), (c)(2), and (d)(3).

b. Adding paragraph (e)(5).

The revisions and addition read as follows:''.

5. On page 69938, in § 414.904:

a. In paragraph (e), the text ''(1) * * *'' is removed.

b. Paragraph (e)(1)(i) is redesignated to (e)(5).

c. Paragraph (e)(1)(i)(A) is redesignated to (e)(5)(i).

d. Paragraph (e)(1)(i)(A)(*1*) is redesignated to (e)(5)(i)(A).

e. Paragraph (e)(1)(i)(A)(*2*) is redesignated to (e)(5)(i)(B).

f. Paragraph (e)(1)(i)(B) is redesignated to (e)(5)(ii).

g. Paragraph (e)(1)(i)(B)(*1*) is redesignated to (e)(5)(ii)(A).

h. Paragraph (e)(1)(i)(B)(*2*) is redesignated to (e)(5)(ii)(B).

6. On page 69940, in § 424.516, in paragraph (e)(1), the phrase ''ownership, including'' is corrected to read ''ownership or control, including''.

C. Corrections to the Addenda

1. On pages 69956, 70007, 70024, 70051, 70088, and 70122, Addendum B: Relative Value Units and Related Information Used in Determining Medicare Payments for 2009, the following CPT codes are corrected to read as follows:

CPT [1]/ HCPCS	Mod	Status	Description	Physician work RVUs [2]	Fully implemented non-facility PE RVUs [2]	Year 2009 transitional non-facility PE RVUs [2]	Fully implemented facility PE RVUs [2]	Year 2009 transitional facility PE RVUs [2]	Malpractice RVUs [2]	Global
20697 ..	.....	A	Comp ext fixate strut change ..	0.00	33.08	33.08	NA	NA	0.01	000
37205 ..	.....	A	Transcath iv stent, percut	8.27	105.15	105.15	3.35	3.46	0.60	000
37206 ..	.....	A	Transcath iv stent/perc addl	4.12	64.26	64.26	1.62	1.58	0.31	ZZZ
47525 ..	.....	A	Change bile duct catheter	1.54	10.90	11.98	0.86	1.35	0.33	000
63650 ..	.....	A	Implant neuroelectrodes	7.15	NA	NA	2.71	2.83	0.53	010
63685 ..	.....	A	Insrt/redo spine n generator	6.00	NA	NA	2.90	3.22	1.05	010
63688 ..	.....	A	Revise/remove neuroreceiver ..	5.25	NA	NA	2.88	3.05	0.89	010
76775 ..	26	A	Us exam abdo back wall, lim ..	0.58	0.23	0.23	0.23	0.23	0.03	XXX
93352 ..	.....	A	Admin ecg contrast agent	0.19	0.84	0.84	NA	NA	0.04	ZZZ

2. On pages 70147, 70148, 70149 and 70151, Addendum C: Codes with Interim RVUs, the following CPT codes are corrected to read as follows:

CPT [1]/ HCPCS	Mod	Status	Description	Physician work RVUs [2]	Fully implemented non-facility PE RVUs [2]	Year 2009 transitional non-facility PE RVUs [2]	Fully implemented facility PE RVUs [2]	Year 2009 transitional facility PE RVUs [2]	Malpractice RVUs [2]	Global
20697 ..	.....	A	Comp ext fixate strut change ..	0.00	33.08	33.08	NA	NA	0.01	000
47525 ..	.....	A	Change bile duct catheter	1.54	10.90	11.98	0.86	1.35	0.33	000
63650 ..	.....	A	Implant neuroelectrodes	7.15	NA	NA	2.71	2.83	0.53	010
63685 ..	.....	A	Insrt/redo spine n generator	6.00	NA	NA	2.90	3.22	1.05	010
63688 ..	.....	A	Revise/remove neuroreceiver ..	5.25	NA	NA	2.88	3.05	0.89	010
93352 ..	.....	A	Admin ecg contrast agent	0.19	0.84	0.84	NA	NA	0.04	ZZZ

3. On page 70215, in Addendum J, the entry for HCPCS code G0394 and its short descriptor are removed.

4. On page 70226, in Addendum J, the entry for CPT code 78414 and its short descriptor are removed.

III. Waiver of Proposed Rulemaking and Delay in Effective Date

We ordinarily publish a notice of proposed rulemaking in the **Federal Register** to provide a period for public comment before the provisions of a rule take effect in accordance with section 553(b) of the Administrative Procedure Act (APA) (5 U.S.C. 553(b)). However, we can waive the notice and comment procedure if the Secretary finds, for good cause, that the notice and comment process is impracticable, unnecessary, or contrary to the public interest, and incorporates a statement of the finding and the reasons for it in the rule.

Section 553(d) of the APA ordinarily requires a 30-day delay in the effective date of final rules after the date of their publication. This 30-day delay in effective date can be waived, however, if an agency finds for good cause that the delay is impracticable, unnecessary, or contrary to the public interest, and the agency incorporates a statement of the findings and its reasons in the rule issued.

This document merely corrects typographical and technical errors made in FR Doc. E8–26213, the CY 2009 PFS final rule with comment period, which appeared in the November 19, 2009 **Federal Register** (73 FR 69726), and is (with limited exceptions not relevant to these corrections, but noted in the rule), effective January 1, 2009. The provisions of the final rule with comment period have been subjected previously to notice and comment procedures. The corrections contained in this document are consistent with, and do not make substantive changes to, the payment methodologies and policies adopted in the CY 2009 PFS final rule with comment period. As such, these corrections are being made to ensure the CY 2009 PFS final rule with comment period accurately reflects the policies adopted in that rule. We find, therefore, for good cause that it is unnecessary and would be contrary to the public interest to undertake further notice and comment procedures to incorporate these corrections into the CY 2009 PFS final rule with comment period.

For the same reasons, we are also waiving the 30-day delay in effective date for these corrections. We believe that it is in the public interest to ensure that the CY 2009 PFS final rule with comment period accurately states our policies as of the date they take effect. Therefore, we find that delaying the effective date of these corrections beyond the effective date of the final rule with comment period would be contrary to the public interest. In so doing, we find good cause to waive the 30-day delay in the effective date.

Authority: (Catalog of Federal Domestic Assistance Program No. 93.774, Medicare—Supplementary Medical Insurance Program)

Dated: December 22, 2008.

Ann C. Agnew,

Executive Secretary to the Department.

[FR Doc. E8–31027 Filed 12–30–08; 8:45 am]

BILLING CODE 4120–01–P

FEDERAL COMMUNICATIONS COMMISSION

47 CFR Part 73

[DA 08–2722; MB Docket No. 08–100; RM–11437]

Television Broadcasting Services; Columbus, GA

AGENCY: Federal Communications Commission.

ACTION: Final rule.

SUMMARY: The Commission grants a petition for rulemaking filed by WTVM License Subsidiary, LLC, the permittee of post-transition station WTVM–DT, to substitute DTV channel 11 for post-transition DTV channel 9 at Columbus, Georgia.

DATES: This rule is effective January 30, 2009.

FOR FURTHER INFORMATION CONTACT: Shaun A. Maher, Media Bureau, (202) 418–1600.

SUPPLEMENTARY INFORMATION: This is a synopsis of the Commission's *Report and Order*, MB Docket No. 08–100, adopted December 17, 2008, and released December 18, 2008. The full text of this document is available for public inspection and copying during normal business hours in the FCC's Reference Information Center at Portals II, CY–A257, 445 12th Street, SW., Washington, DC, 20554. This document will also be available via ECFS (*http://www.fcc.gov/cgb/ecfs/*). (Documents will be available electronically in ASCII, Word 97, and/or Adobe Acrobat.) This document may be purchased from the Commission's duplicating contractor, Best Copy and Printing, Inc., 445 12th Street, SW., Room CY–B402, Washington, DC 20554, telephone 1–800–478–3160 or via e-mail *http://www.BCPIWEB.com.* To request this document in accessible formats (computer diskettes, large print, audio recording, and Braille), send an e-mail to *fcc504@fcc.gov* or call the Commission's Consumer and Governmental Affairs Bureau at (202) 418–0530 (voice), (202) 418–0432 (TTY). This document does not contain information collection requirements subject to the Paperwork Reduction Act of 1995, Public Law 104–13. In addition, therefore, it does not contain any information collection burden ''for small business concerns with fewer than 25 employees,'' pursuant to the Small Business Paperwork Relief Act of 2002, Public Law 107–198, *see* 44 U.S.C. 3506(c)(4). Provisions of the Regulatory Flexibility Act of 1980 do not apply to this proceeding.

The Commission will send a copy of this *Report and Order* in a report to be sent to Congress and the Government Accountability Office pursuant to the Congressional review Act, *see* 5 U.S.C. 801(a)(1)(A).

List of Subjects in 47 CFR Part 73

Television, Television broadcasting.

■ For the reasons discussed in the preamble, the Federal Communications Commission amends 47 CFR part 73 as follows:

PART 73—RADIO BROADCAST SERVICES

■ 1. The authority citation for part 73 continues to read as follows:

Authority: 47 U.S.C. 154, 303, 334, 336.

§ 73.622 [Amended]

■ 2. Section 73.622(i), the Post-Transition Table of DTV Allotments under Georgia, is amended by adding DTV channel 11 and removing DTV channel 9 at Columbus.

Federal Communications Commission.

Barbara A. Kreisman,

Chief, Video Division, Media Bureau.

[FR Doc. E8–31005 Filed 12–30–08; 8:45 am]

BILLING CODE 6712–01–P

FEDERAL COMMUNICATIONS COMMISSION

47 CFR Part 73

[DA 08–2723; MB Docket No. 08–103; RM–11441]

Television Broadcasting Services; Augusta, GA

AGENCY: Federal Communications Commission.

ACTION: Final rule.

SUMMARY: The Commission grants a petition for rulemaking filed by Media Holdings, Inc., permittee of station WFXG–DT, to substitute DTV channel 31 for its assigned post-transition DTV channel 51 at Augusta, Georgia.

DATES: This rule is effective January 30, 2009.

FOR FURTHER INFORMATION CONTACT: Shaun A. Maher, Media Bureau, (202) 418–1600.

SUPPLEMENTARY INFORMATION: This is a synopsis of the Commission's *Report and Order,* MB Docket No. 08–103, adopted December 17, 2008, and released December 18, 2008. The full text of this document is available for public inspection and copying during normal business hours in the FCC's Reference Information Center at Portals II, CY–A257, 445 12th Street, SW., Washington, DC, 20554. This document will also be available via ECFS (*http://www.fcc.gov/cgb/ecfs/*). (Documents will be available electronically in ASCII, Word 97, and/or Adobe Acrobat.) This document may be purchased from the Commission's duplicating contractor, Best Copy and Printing, Inc., 445 12th Street, SW., Room CY–B402, Washington, DC 20554, telephone 1–800–478–3160 or via e-mail *http://www.BCPIWEB.com.* To request this document in accessible formats

(computer diskettes, large print, audio recording, and Braille), send an e-mail to *fcc504@fcc.gov* or call the Commission's Consumer and Governmental Affairs Bureau at (202) 418–0530 (voice), (202) 418–0432 (TTY). This document does not contain information collection requirements subject to the Paperwork Reduction Act of 1995, Public Law 104–13. In addition, therefore, it does not contain any information collection burden ''for small business concerns with fewer than 25 employees,'' pursuant to the Small Business Paperwork Relief Act of 2002, Public Law 107–198, *see* 44 U.S.C. 3506(c)(4). Provisions of the Regulatory Flexibility Act of 1980 do not apply to this proceeding.

The Commission will send a copy of this *Report and Order* in a report to be sent to Congress and the Government Accountability Office pursuant to the Congressional review Act, *see* 5 U.S.C. 801(a)(1)(A).

List of Subjects in 47 CFR Part 73

Television, Television broadcasting.

■ For the reasons discussed in the preamble, the Federal Communications Commission amends 47 CFR part 73 as follows:

PART 73—RADIO BROADCAST SERVICES

■ 1. The authority citation for part 73 continues to read as follows:

Authority: 47 U.S.C. 154, 303, 334, 336.

§ 73.622 [Amended]

■ 2. Section 73.622(i), the Post-Transition Table of DTV Allotments under Georgia, is amended by adding DTV channel 31 and removing DTV channel 51 at Augusta.

Federal Communications Commission.

Barbara A. Kreisman,

Chief, Video Division, Media Bureau.

[FR Doc. E8–31003 Filed 12–30–08; 8:45 am]

BILLING CODE 6712–01–P

DEPARTMENT OF COMMERCE

National Oceanic and Atmospheric Administration

50 CFR Part 648

[Docket No. 070817467–8554–02]

RIN 0648–XM40

Magnuson-Stevens Fishery Conservation and Management Act Provisions; Fisheries of the Northeastern United States; Atlantic Sea Scallop Fishery; Closure of the Limited Access General Category Scallop Fishery to Individual Fishing Quota Scallop Vessels

AGENCY: National Marine Fisheries Service (NMFS), National Oceanic and Atmospheric Administration (NOAA), Commerce.

ACTION: Temporary rule; closure.

SUMMARY: NMFS announces the Limited Access General Category (LAGC) Scallop Fishery is closed to individual fishing quota (IFQ) scallop vessels as of 0001 hrs local time, December 31, 2008. This fishery will re-open on March 1, 2009. This action is based on the determination that the annual scallop total allowable catch (TAC) for LAGC IFQ scallop vessels (including vessels issued an IFQ letter of authorization (LOA) to fish under appeal), is projected to be landed. This action is being taken to prevent IFQ scallop vessels from exceeding the 2008 annual TAC, in accordance with the regulations implementing Amendment 11 to the Atlantic Sea Scallop Fishery Management Plan (FMP), enacted by Framework 19 to the FMP, and the Magnuson-Stevens Fishery Conservation and Management Act.

DATES: The closure of the LAGC fishery to all IFQ scallop vessels is effective 0001 hrs local time, December 31, 2008, through February 28, 2009.

FOR FURTHER INFORMATION CONTACT: Cheryl McGarrity, Fishery Management Specialist, (978) 281–9174, fax (978) 281–9135.

SUPPLEMENTARY INFORMATION: Regulations governing fishing activity in the LAGC fishery authorize vessels issued a valid IFQ scallop permit to fish in the LAGC fishery under specific conditions, including a TAC (see 50 CFR 648.59, 648.60, and 648.53(a)(8)(iii)). The TACs were established by the final rule that implemented Framework 19 to the FMP (73 FR 30790 May 29, 2008) and included an annual TAC of 4,352,500 lb (1,974,261 kg) that may be landed by IFQ vessels during the 2008 fishing year, approximately 178,000 lb (80,739 kg) of which was remaining for harvest at the beginning of the fourth quarter. The regulations at § 648.53(a)(8)(iii) require the LAGC fishery to be closed to IFQ vessels once the Northeast Regional Administrator has determined that the TAC is projected to be landed.

Based on dealer reporting and vessel pre-landing reports through Vessel Monitoring Systems (VMS), it is projected that, given current activity levels by IFQ scallop vessels in the area, 4,352,500 lb (1,974,261 kg) will have been landed by December 30, 2008. Therefore, in accordance with the regulations at § 648.53(a)(8)(iii), the LAGC scallop fishery is closed to all general IFQ vessels as of 0001 hr local time December 31, 2008. Accordingly, this closure is in effect for the remainder of the fourth quarter of the 2008 scallop fishing year. IFQ scallop vessels are not allowed to fish for, possess, or retain scallops, or declare, or initiate, a scallop trip following this closure for the remainder of the 2008 fourth quarter, ending on February 28, 2009. The LAGC scallop fishery is scheduled to re-open to IFQ scallop vessels on March 1, 2009.

Classification

This action is required by 50 CFR part 648 and is exempt from review under Executive Order 12866.

This action closes the LAGC scallop fishery to all IFQ scallop vessels until March 1, 2009. The regulations at § 648.53(a)(8)(iii) require such action to ensure that IFQ scallop vessels do not exceed the 2008 annual TAC. The LAGC scallop fishery opened for the fourth quarter of the 2008 fishing year at 0001 hours on December 1, 2008. Data indicating the IFQ scallop fleet has landed all of the 2008 fourth quarter TAC have only recently become available. The Assistant Administrator for Fisheries, NOAA (AA), finds good cause pursuant to 5 U.S.C. 553(b)(B) to waive prior notice and the opportunity for public comment because it would be contrary to the public interest. If implementation of this closure is delayed to solicit prior public comment, the quota for this quarter will be exceeded, thereby undermining the conservation objectives of the FMP. The AA further finds, pursuant to 5 U.S.C 553(d)(3), good cause to waive the thirty (30) day delayed effectiveness period for the reasons stated above.

Authority: 16 U.S.C. 1801 *et seq.*

Dated: December 23, 2008.

Alan D. Risenhoover,

Director, Office of Sustainable Fisheries, National Marine Fisheries Service.

[FR Doc. E8–31126 Filed 12–24–08; 4:15 pm]

BILLING CODE 3510–22–S

DEPARTMENT OF COMMERCE

National Oceanic and Atmospheric Administration

50 CFR Part 679

[Docket No. 080226310–81584–02]

RIN 0648–AU20

Fisheries of the Exclusive Economic Zone Off Alaska; Revised Management Authority for Dark Rockfish in the Bering Sea and Aleutian Islands Management Area and the Gulf of Alaska

AGENCY: National Marine Fisheries Service (NMFS), National Oceanic and Atmospheric Administration (NOAA), Commerce.

ACTION: Final rule.

SUMMARY: NMFS issues a final rule that implements Amendment 73 to the Fishery Management Plan for Groundfish of the Bering Sea and Aleutian Islands Management Area and Amendment 77 to the Fishery Management Plan for Groundfish of the Gulf of Alaska (collectively, Amendments 73/77). Amendments 73/77 remove dark rockfish (*Sebastes ciliatus*) from both fishery management plans (FMPs). The State of Alaska (State) will assume management of dark rockfish catch by State-permitted vessels in the Bering Sea and Aleutian Islands Management Area and the Gulf of Alaska, in addition to its existing authority in State waters. This action is necessary to allow the State to implement more responsive, regionally based management of dark rockfish than is currently possible under the FMPs. This action will improve conservation and management of dark rockfish and promote the goals and objectives of the Magnuson-Stevens Fishery Conservation and Management Act, the FMPs, and other applicable laws.

DATES: Effective January 30, 2009.

ADDRESSES: Copies of Amendments 73/77 and the Environmental Assessment/Regulatory Impact Review/Final Regulatory Flexibility Analysis (EA/RIR/FRFA) prepared for this action are available from the NMFS Alaska Region, P.O. Box 21668, Juneau, AK 99802, or from the Alaska Region NMFS Web site at *http://alaskafisheries.noaa.gov/regs/analyses/*.

FOR FURTHER INFORMATION CONTACT: Thomas Pearson, 907–481–1780.

SUPPLEMENTARY INFORMATION: NMFS manages the groundfish fisheries in the exclusive economic zone of the Bering Sea and Aleutian Islands Management Area (BSAI) and the Gulf of Alaska (GOA) under the Fishery Management Plan for Groundfish of the Bering Sea and Aleutian Islands Management Area and the Fishery Management Plan for Groundfish of the Gulf of Alaska (FMPs). The North Pacific Fishery Management Council (Council) prepared the FMPs under the authority of the Magnuson-Stevens Fishery Conservation and Management Act (Magnuson-Stevens Act), 16 U.S.C. 1801 *et seq*. Regulations governing U.S. fisheries and implementing the FMPs appear at 50 CFR parts 600 and 679.

Background

In April 2007, the Council recommended Amendment 73 to the Fishery Management Plan for Groundfish of the Bering Sea and Aleutian Islands Management Area and Amendment 77 to the Fishery Management Plan for Groundfish of the Gulf of Alaska (Amendments 73/77). Amendments 73/77 would remove dark rockfish (*Sebastes ciliatus*) from the FMPs. Dark rockfish currently are managed as part of the ''other rockfish'' complex in the BSAI and as part of the pelagic shelf rockfish (PSR) complex in the GOA. The Council recommended removal of dark rockfish from the FMPs for the following reasons: (1) In 2004, dark rockfish was identified as a separate rockfish species, (2) data in the stock assessments for the PSR complex in the GOA and the ''other rockfish'' complex in the BSAI are predominantly from dusky rockfish, not dark rockfish, (3) dark rockfish are distributed in nearshore habitats that are not specifically assessed by the NMFS trawl surveys, (4) there is a possibility of overfishing dark rockfish in local areas given the relatively high total allowable catch (TAC) for the PSR and ''other rockfish'' complexes as a whole, and (5) the removal of dark rockfish from the FMPs will allow the State of Alaska (State) to assume management authority for dark rockfish catch by State-permitted vessels in Federal waters off Alaska, in addition to its existing authority in State waters and to implement more responsive, regionally based management of dark rockfish than is possible under the FMPs. The State of Alaska has expressed its intent to assume management of dark rockfish after NMFS provides them with the authority to do so.

Detailed information on the management background and need for action is in the preamble to the proposed rule (73 FR 55010, September 24, 2008). A Notice of Availability (NOA) of the FMP amendments was published in the **Federal Register** on September 17, 2008 (73 FR 53816). Comments on both the proposed rule and NOA were invited through November 17, 2008. One comment was received and is described and responded to below. Amendments 73/77 to the FMPs were approved by the Secretary of Commerce on December 15, 2008.

Comments and Responses

NMFS received one comment. The comment did not indicate whether it was in response to the notice of availability for Amendments 73/77 or the proposed rule.

Comment 1: The commenter opposed turning over management of dark rockfish to the State of Alaska because of his or her general concerns about the State's management of all natural resources under its authority. The commenter also expressed general opposition to NMFS's management of fishery resources off Alaska.

Response: NMFS disagrees with the commenter that management of dark rockfish should not be turned over to the State. In addition to the reasons described above that the Council recommended removal of dark rockfish from the FMPs, the State also has demonstrated its ability to manage rockfish species previously removed from the FMPs for similar reasons. Black rockfish was removed from the FMPs and management was turned over to the State in 1998. Some of the management measures that the State has implemented for black rockfish in the GOA include development of a fishery management plan specifically addressing black rockfish and management measures designed to prevent localized depletion of black rockfish. These management measures include smaller area guideline harvest levels, lower total guideline harvest levels compared to what the total allowable catch would have been under the Federal FMPs, and lower maximum retainable amounts than would have been in effect under Federal regulations. The State also has undertaken research to assess the status of black rockfish stocks in the GOA that the Federal government likely would not have been able to do if it had retained management of black rockfish. NMFS and the Council expect the State to manage dark

rockfish in a similar manner once it has the authority to do so. Therefore, no change was made to the final rule as a result of this comment.

Regulatory Amendments

This final rule revises the definition of ''rockfish'' at § 679.2 to exclude dark rockfish in both the GOA and BSAI. The definition for ''other rockfish'' is amended to add a reference to Table 11 to part 679 because the quota category for ''other rockfish'' exists in both the BSAI and GOA and is referred to in the maximum retainable amounts tables for both areas (Tables 10 and 11). In addition, the definition of ''other red rockfish'' is removed from § 679.2 because this rockfish quota category no longer exists and the term is not used anywhere else in 50 CFR part 679.

The final rule also corrects the Latin name of dusky rockfish (*Sebastes variabilis*), species code 172, in Table 2a to part 679, and adds dark rockfish (*Sebastes ciliatus*), species code 173, to the non-FMP species listed in Table 2d to part 679.

In Table 10 to part 679 (Gulf of Alaska Retainable Percentages), footnote 5 is revised to correct the Latin name for dusky rockfish (*Sebastes variabilis*). Footnote 8 is revised to remove reference to *Sebastes* and *Sebastolobus* and to refer to the definition of ''rockfish'' at § 679.2.

This final rule also makes minor editorial revisions to Table 10 to part 679. In note 1, the species code for ''shortraker/rougheye (171)'' is removed because NMFS no longer has a species code associated with the combination of shortraker and rougheye rockfish Table 2a to part 679. Shortraker rockfish and rougheye rockfish have separate species codes. Note 10 lists the species included in the aggregated forage fish category. The word ''families'' in the parentheses following the term ''Aggregated forage fish'' is replaced with the word ''taxa'' because all species of the order Euphausiacea (krill) also are included in the list of aggregated forage fish. The word ''taxa'' refers to more general groupings of similar organisms and includes taxonomic families and orders.

In Table 11 to part 679 (BSAI Retainable Percentages), footnotes 3 and 6 are revised to remove references to *Sebastes* and *Sebastolobus* and to refer to the definition of ''rockfish'' at § 679.2. This revision excludes dark rockfish from these rockfish categories in the BSAI because dark rockfish are excluded from the definition of rockfish at § 679.2.

Changes From the Proposed Rule

In the proposed rule, NMFS mistakenly included revisions to the retainable percentages in Table 10 to part 679 for selected groundfish species using arrowtooth flounder as a basis species. The proposed rule did not specifically propose these revisions in the preamble. These revisions were recommended by the Council in a separate action and were published in a separate proposed rule on November 25, 2008 (73 FR 71592). Revisions related to the retainable percentages using arrowtooth flounder as a basis species should not have been included in the proposed rule for Amendments 73/77. Therefore, this final rule does not implement revisions to the retainable percentages in Table 10 for deep-water flatfish, rex sole, flathead sole, shallow-water flatfish, sablefish, aggregated rockfish, Atka mackerel, and skates using arrowtooth flounder as a basis species. The retainable percentages for these species using arrowtooth flounder as a basis species remain at 0 percent in this final rule, which reflects current regulations at 50 CFR part 679.

This final rule also incorporates revisions that were made to Tables 2a, 2d, 10, and 11 to part 679 in a separate final rule that implemented a variety of recordkeeping and reporting regulatory amendments (73 FR 76136; December 15, 2008). The revision to the hyphenation of the words ''shallow-water'' and ''deep-water'' in Table 10 to part 679 was included in the proposed rule for Amendments 73/77, but since this revision was made in the final rule described above that implemented recordkeeping and reporting revisions, changing the hyphenation of these terms no longer needs to be implemented through this final rule for Amendments 73/77.

Classification

The Administrator, Alaska Region, NMFS, determined that Amendments 73/77 are necessary for the conservation and management of the groundfish fisheries in the BSAI and GOA, and that these FMP amendments and the regulatory amendments to implement them are consistent with the Magnuson-Stevens Fishery Conservation and Management Act and other applicable laws.

This final rule has been determined to be not significant for the purposes of Executive Order 12866.

A final regulatory flexibility analysis (FRFA) was prepared. The FRFA incorporates the initial regulatory flexibility analysis (IRFA), and provides a summary of the analyses completed to support the action. A copy of this analysis is available from NMFS (see **ADDRESSES**). No comments were received on the IRFA.

The numbers of small entities that may be directly regulated by this action have been estimated using information on gross revenues and American Fisheries Act affiliation in 2006, and information on participation in the GOA Rockfish Program and on corporate ownership of vessel fleets from 2007 and 2008.

In 2006, one year immediately preceding the Council action recommending the removal of dark rockfish from the FMPs, there were 81 small catcher vessels that made landings of pelagic shelf rockfish from the GOA, taken as either targeted or incidental catch fish. No small catcher-processors made such landings. The 81 small catcher vessels included 74 that used hook-and-line, pot, or jig gear, and seven that used pelagic or non-pelagic trawl gear. The 81 small catcher vessels averaged about $400,000 in gross ex-vessel revenues from all sources.

In 2006, one small catcher/processor and 36 small catcher vessels made incidental catch landings of pelagic shelf rockfish in the BSAI. All together, 35 vessels used hook-and-line, pot, or jig gear, and two used trawl gear. The 37 small vessels averaged about $1.4 million in gross revenues from all sources.

This regulation does not impose new recordkeeping and reporting requirements on the regulated small entities.

Two alternatives are analyzed in this document: Alternative 1—No Action, continue managing dark rockfish within the larger PSR complex in the GOA, and within the ''other rockfish'' complex in the BSAI; and Alternative 2—Preferred Alternative, remove dark rockfish from the GOA groundfish FMP and BSAI groundfish FMP, and defer management of this species, in both State and Federal waters, to the State of Alaska.

The preferred alternative may have adverse impacts on operations targeting pelagic shelf rockfish in the Central GOA and in the West Yakutat District. NMFS does not expect the action to have adverse impacts on operations targeting rockfish in the Southeast Outside and Western regions of the GOA, or in the BSAI (targeting does not appear to be significant in the Southeast Outside or BSAI). NMFS does not expect the action to have adverse impacts on operations taking dark rockfish as incidental catch. In the Central GOA, most of the adverse impact would fall on participants in the GOA Rockfish Program. Because of the

affiliations these operations have through the quota management and allocation features of the Rockfish Program, NMFS does not believe these operations can be considered small entities for the purpose of the RFA. However, it is possible that they would experience some adverse impact as described in the Regulatory Impact Review. The primary alternative considered here, Alternative 1—No Action, would not have these adverse impacts, but would not remove dark rockfish from the FMPs and, thus, does not accomplish the stated objective for the action.

The Council also considered an additional alternative to the proposed action that was not carried forward for analysis. This alternative was to transfer management authority of dark rockfish to the State of Alaska while retaining the species under the Federal FMPs. Demersal shelf rockfish in Southeast Alaska is under a similarly delegated management program with the State of Alaska. A similar alternative was considered and rejected for black rockfish and blue rockfish under Amendment 46 to the GOA FMP. This alternative was not carried forward for dark rockfish because (1) State personnel would be required to comply with additional Federal management processes that may not be consistent with State procedures; (2) the State would need to meet both State and Federal requirements, which often prescribe different time-frames for management actions (*e.g.*, notice, public meetings, and reports); and (3) the State did not believe it could meet the costly assessment requirements for managing a nearshore species, mandated under a Federal management plan.

Small Entity Compliance Guide

Section 212 of the Small Business Regulatory Enforcement Fairness Act of 1996 states that, for each rule or group of related rules for which an agency is required to prepare a FRFA, the agency shall publish one or more guides to assist small entities in complying with the rule, and shall designate such publications as ''small entity compliance guides.'' The agency shall explain the actions that a small entity is required to take to comply with a rule or group of rules. The preamble to the proposed rule and this final rule fully explain the regulatory amendments that will be implemented to remove dark rockfish from the FMPs. The proposed rule, final rule, and regulations governing the groundfish fisheries off Alaska are the best source of information about how to comply with Amendments 73/77 and, therefore, collectively they represent the small entity compliance guide for this final rule. These documents are available from NMFS (see **ADDRESSES**) and from the NMFS Alaska Region's Web site at *http://alaskafisheries.noaa.gov.* The State of Alaska will assume management of dark rockfish in the BSAI and GOA when this final rule becomes effective and all State-permitted vessels will be required to comply with State of Alaska laws and regulations governing the catch of dark rockfish.

List of Subjects in 50 CFR Part 679

Alaska, Fisheries.

Dated: December 22, 2008.

Samuel D. Rauch, III.,

Deputy Assistant Administrator for Regulatory Programs, National Marine Fisheries Service.

■ For the reasons set out in the preamble, NMFS amends 50 CFR part 679 as follows:

PART 679—FISHERIES OF THE EXCLUSIVE ECONOMIC ZONE OFF ALASKA

■ 1. The authority citation for 50 CFR part 679 continues to read as follows:

Authority: 16 U.S.C. 773 *et seq.,* 1801 *et seq.,* 3631 *et seq.;* Pub. L. 108–447.

■ 2. In § 679.2, remove the definition for ''Other red rockfish'' and revise the definitions for ''Other rockfish'' and ''Rockfish'' to read as follows:

§ 679.2 Definitions.

* * * * *

Other rockfish (see Tables 10 and 11 to this part pursuant to § 679.20(c); see also ''rockfish'' in this section.)

* * * * *

Rockfish means:

(1) *For the Gulf of Alaska:* Any species of the genera *Sebastes* or *Sebastolobus* except *Sebastes ciliatus* (dark rockfish); *Sebastes melanops* (black rockfish); and *Sebastes mystinus* (blue rockfish).

(2) *For the Bering Sea and Aleutian Islands Management Area:* Any species of the genera *Sebastes* or *Sebastolobus* except *Sebastes ciliatus* (dark rockfish).

* * * * *

■ 3. Table 2a to part 679 is revised to read as follows:

TABLE 2a TO PART 679—SPECIES CODES: FMP GROUNDFISH

Species description	Code
Atka mackerel (greenling)	193
Flatfish, miscellaneous (flatfish species without separate codes)	120
FLOUNDER:	
Alaska plaice	133
Arrowtooth and/or Kamchatka	121
Starry	129
Octopus, North Pacific	870
Pacific cod	110
Pollock	270
ROCKFISH:	
Aurora (*Sebastes aurora*)	185
Black (BSAI) (*S. melanops*)	142
Blackgill (*S. melanostomus*)	177
Blue (BSAI) (*S. mystinus*)	167
Bocaccio (*S. paucispinis*)	137
Canary (*S. pinniger*)	146
Chilipepper (*S. goodei*)	178
China (*S. nebulosus*)	149
Copper (*S. caurinus*)	138
Darkblotched (*S. crameri*)	159
Dusky (*S. variabilis*)	172
Greenstriped (*S. elongatus*)	135
Harlequin (*S. variegatus*)	176
Northern (*S. polyspinis*)	136
Pacific ocean perch (*S. alutus*)	141
Pygmy (*S. wilsoni*)	179
Quillback (*S. maliger*)	147
Redbanded (*S. babcocki*)	153
Redstripe (*S. proriger*)	158
Rosethorn (*S. helvomaculatus*)	150
Rougheye (*S. aleutianus*)	151
Sharpchin (*S. zacentrus*)	166
Shortbelly (*S. jordani*)	181
Shortraker (*S. borealis*)	152
Silvergray (*S. brevispinis*)	157
Splitnose (*S. diploproa*)	182
Stripetail (*S. saxicola*)	183
Thornyhead (all *Sebastolobus* species)	143
Tiger (*S. nigrocinctus*)	148
Vermilion (*S. miniatus*)	184
Widow (*S. entomelas*)	156
Yelloweye (*S. ruberrimus*)	145
Yellowmouth (*S. reedi*)	175
Yellowtail (*S. flavidus*)	155
Sablefish (blackcod)	710
Sculpins	160
SHARKS:	
Other (if salmon, spiny dogfish or Pacific sleeper shark—use specific species code)	689
Pacific sleeper	692
Salmon	690
Spiny dogfish	691
SKATES:	
Big	702
Longnose	701
Other (If longnose or big skate—use specific species code)	700
SOLE:	
Butter	126
Dover	124
English	128
Flathead	122
Petrale	131
Rex	125
Rock	123
Sand	132
Yellowfin	127
Squid, majestic	875
Turbot, Greenland	134

■ 4. Table 2d to part 679 is revised to read as follows:

TABLE 2d TO PART 679—SPECIES CODES: NON-FMP SPECIES

Species description	Code
GENERAL USE	
Arctic char (anadromous)	521
Bering flounder (*Hippoglossoides robustus*)	116
Dolly varden (anadromous)	531
Eels or eel-like fish	210
Eel, wolf	217
GREENLING:	
Kelp	194
Rock	191
Whitespot	192
Grenadier, giant	214
Grenadier (rattail)	213
Jellyfish (unspecified)	625
Lamprey, Pacific	600
Lingcod	130
Lumpsucker	216
Pacific flatnose	260
Pacific hagfish	212
Pacific hake	112
Pacific lamprey	600
Pacific saury	220
Pacific tomcod	250
Poacher (Family Agonidae)	219
Prowfish	215
Ratfish	714
Rockfish, black (GOA)	142
Rockfish, blue (GOA)	167
Rockfish, dark	173
Sardine, Pacific (pilchard)	170
Sea cucumber, red	895
Shad	180
Skilfish	715
Snailfish, general (genus *Liparis* and genus *Careproctus*)	218
Sturgeon, general	680
Wrymouths	211
SHELLFISH	
Abalone, northern (pinto)	860
CLAMS:	
Arctic surf	812
Cockle	820
Eastern softshell	842
Pacific geoduck	815
Pacific littleneck	840
Pacific razor	830
Washington butter	810
Coral	899
Mussel, blue	855
Oyster, Pacific	880
Scallop, weathervane	850
Scallop, pink (or calico)	851
SHRIMP:	
Coonstripe	964
Humpy	963
Northern (pink)	961
Sidestripe	962
Spot	965
Snails	890
Urchin, green sea	893
Urchin, red sea	892

■ 5. Tables 10 and 11 to part 679 are revised to read as follows:

BILLING CODE 3510–22–P

Table 10 to Part 679--Gulf of Alaska Retainable Percentages

BASIS SPECIES		INCIDENTAL CATCH SPECIES (for DSR caught on catcher vessels in the SEO, see § 679.20 (j)[6])														
Code	Species	Pollock	Pacific cod	DW flat	Rex sole	Flathead sole	SW Flat	Arrowtooth flounder	Sablefish	Aggregated rockfish[8]	SR/RE ERA	DSR SEO (C/Ps only)	Atka mackerel	Aggregated forage fish[10]	Skates[11]	Other species[7]
110	Pacific cod	20	na[9]	20	20	20	20	35	1	5	[1]	10	20	2	20	20
121	Arrowtooth	5	5	0	0	0	0	na	0	0	0	0	0	2	0	20
122	Flathead sole	20	20	20	20	na	20	35	7	15	7	1	20	2	20	20
125	Rex sole	20	20	20	na	20	20	35	7	15	7	1	20	2	20	20
136	Northern rockfish	20	20	20	20	20	20	35	7	15	7	1	20	2	20	20
141	Pacific ocean perch	20	20	20	20	20	20	35	7	15	7	1	20	2	20	20
143	Thornyhead	20	20	20	20	20	20	35	7	15	7	1	20	2	20	20
152/151	Shortraker/rougheye [1]	20	20	20	20	20	20	35	7	15	na	1	20	2	20	20
193	Atka mackerel	20	20	20	20	20	20	35	1	5	[1]	10	na	2	20	20
270	Pollock	na	20	20	20	20	20	35	1	5	[1]	10	20	2	20	20
710	Sablefish	20	20	20	20	20	20	35	na	15	7	1	20	2	20	20
Flatfish, deep-water[2]		20	20	na	20	20	20	35	7	15	7	1	20	2	20	20
Flatfish, shallow-water[3]		20	20	20	20	20	na	35	1	5	[1]	10	20	2	20	20
Rockfish, other [4]		20	20	20	20	20	20	35	7	15	7	1	20	2	20	20
Rockfish, pelagic [5]		20	20	20	20	20	20	35	7	15	7	1	20	2	20	20
Rockfish, DSR-SEO [6]		20	20	20	20	20	20	35	7	15	7	na	20	2	20	20
Skates[11]		20	20	20	20	20	20	35	1	5	[1]	10	20	2	na	20
Other species [7]		20	20	20	20	20	20	35	1	5	[1]	10	20	2	20	na
Aggregated amount of non-groundfish species[12]		20	20	20	20	20	20	35	1	5	[1]	10	20	2	20	20

Notes to Table 10 to Part 679					
1	Shortraker/rougheye rockfish				
		SR/RE	shortraker rockfish (152)		
			rougheye rockfish (151)		
		SR/RE ERA	shortraker/rougheye rockfish in the Eastern Regulatory Area (ERA).		
	Where numerical percentage is not indicated, the retainable percentage of SR/RE is included under Aggregated Rockfish				
2	Deep-water flatfish	Dover sole, Greenland turbot, and deep-sea sole			
3	Shallow-water flatfish	Flatfish not including deep-water flatfish, flathead sole, rex sole, or arrowtooth flounder			
4	Other rockfish	Western Regulatory Area	means slope rockfish and demersal shelf rockfish		
		Central Regulatory Area			
		West Yakutat District			
		Southeast Outside District	means slope rockfish		
		Slope rockfish			
		S. aurora (aurora)	*S. variegatus* (harlequin)	*S. brevispinis* (silvergrey)	
		S. melanostomus (blackgill)	*S. wilsoni* (pygmy)	*S. diploproa* (splitnose)	
		S. paucispinis (bocaccio)	*S. babcocki* (redbanded)	*S saxicola* (stripetail)	
		S. goodei (chilipepper)	*S. proriger* (redstripe)	*S. miniatus* (vermilion)	
		S. crameri (darkblotch)	*S. zacentrus* (sharpchin)	*S. reedi* (yellowmouth)	
		S. elongatus (greenstriped)	*S. jordani* (shortbelly)		
	In the Eastern GOA only, Slope rockfish also includes *S. polyspinous*. (northern)				
5	Pelagic shelf rockfish	*S. variabilis* (dusky)	*S. entomelas* (widow)	*S. flavidus* (yellowtail)	
6	Demersal shelf rockfish (DSR)	*S. pinniger* (canary)	*S. maliger* (quillback)	*S. ruberrimus* (yelloweye)	
		S. nebulosus (china)	*S. helvomaculatus* (rosethorn)		
		S. caurinus (copper)	*S. nigrocinctus* (tiger)		
		DSR-SEO = Demersal shelf rockfish in the Southeast Outside District (SEO) The operator of a catcher vessel that is required to have a Federal fisheries permit, or that harvests IFQ halibut with hook and line or jig gear, must retain and land all DSR that is caught while fishing for groundfish or IFQ halibut in the SEO. Limits on sale and requirements for disposal of DSR are set out at § 679.20 (j).			
7	Other species	Sculpins	octopus	sharks	squid
8	Aggregated rockfish	Means rockfish as defined at § 679.2 except in:			
		Southeast Outside District	where DSR is a separate category for those species marked with a numerical percentage		
		Eastern Regulatory Area	where SR/RE is a separate category for those species marked with a numerical percentage		

Notes to Table 10 to Part 679			
9	N/A	not applicable	
10	Aggregated forage fish (all species of the following taxa)		
		Bristlemouths, lightfishes, and anglemouths (family *Gonostomatidae*)	209
		Capelin smelt (family *Osmeridae*)	516
		Deep-sea smelts (family *Bathylagidae*)	773
		Eulachon smelt (family *Osmeridae*)	511
		Gunnels (family *Pholidae*)	207
		Krill (order *Euphausiacea*)	800
		Laternfishes (family *Myctophidae*)	772
		Pacific herring (family *Clupeidae*)	235
		Pacific Sand fish (family *Trichodontidae*)	206
		Pacific Sand lance (family *Ammodytidae*)	774
		Pricklebacks, war-bonnets, eelblennys, cockscombs and Shannys (family *Stichaeidae*)	208
		Surf smelt (family *Osmeridae*)	515
11	Skates Species and Groups		
		Big Skates	702
		Longnose Skates	701
		Other Skates	700
12	Aggregated non-groundfish	All legally retained species of fish and shellfish, including IFQ halibut, that are not listed as FMP groundfish in Tables 2a and 2c to this part.	

Table 11 to Part 679--BSAI Retainable Percentages

BASIS SPECIES		INCIDENTAL CATCH SPECIES															
Code	Species	Pollock	Pacific cod	Atka Mackerel	Alaska plaice	Arrow-tooth	Yellow fin sole	Other flatfish[2]	Rock sole	Flathead sole	Green-land turbot	Sable-fish[1]	Short-raker/ rougheye	Aggregated rockfish[6]	Squid	Aggregated forage fish[7]	Other species[4]
110	Pacific cod	20	na[5]	20	20	35	20	20	20	20	1	1	2	5	20	2	20
121	Arrowtooth	0	0	0	0	na	0	0	0	0	0	0	0	0	0	2	0
122	Flathead sole	20	20	20	35	35	35	35	35	na	35	15	7	15	20	2	20
123	Rock sole	20	20	20	35	35	35	35	na	35	1	1	2	15	20	2	20
127	Yellowfin sole	20	20	20	35	35	na	35	35	35	1	1	2	5	20	2	20
133	Alaska Plaice	20	20	20	na	35	35	35	35	35	1	1	2	5	20	2	20
134	Greenland turbot	20	20	20	20	35	20	20	20	20	na	15	7	15	20	2	20
136	Northern	20	20	20	20	35	20	20	20	20	35	15	7	15	20	2	20
141	Pacific ocean perch	20	20	20	20	35	20	20	20	20	35	15	7	15	20	2	20
152/ 151	Shortraker/ Rougheye	20	20	20	20	35	20	20	20	20	35	15	na	5	20	2	20
193	Atka mackerel	20	20	Na	20	35	20	20	20	20	1	1	2	5	20	2	20
270	Pollock	na	20	20	20	35	20	20	20	20	1	1	2	5	20	2	20
710	Sablefish[1]	20	20	20	20	35	20	20	20	20	35	na	7	15	20	2	20
875	Squid	20	20	20	20	35	20	20	20	20	1	1	2	5	na	2	20
Other flatfish[2]		20	20	20	35	35	35	na	35	35	1	1	2	5	20	2	20
Other rockfish[3]		20	20	20	20	35	20	20	20	20	35	15	7	15	20	2	20
Other species[4]		20	20	20	20	35	20	20	20	20	1	1	2	5	20	2	na
Aggregated amount non-groundfish species[8]		20	20	20	20	35	20	20	20	20	1	1	2	5	20	2	20

[1] Sablefish: for fixed gear restrictions, see § 679.7(f)(3)(ii) and (f)(11).
[2] Other flatfish includes all flatfish species, except for Pacific halibut (a prohibited species), flathead sole, Greenland turbot, rock sole, yellowfin sole, Alaska plaice, and arrowtooth flounder.
[3] Other rockfish includes all "rockfish" as defined at § 679.2, except for Pacific ocean perch; and northern, shortraker, and rougheye rockfish.
[4] Other species includes sculpins, sharks, skates and octopus. Forage fish, as defined at Table 2c to this part are not included in the "other species" category.
[5] na = not applicable
[6] Aggregated rockfish includes all "rockfish" as defined at § 679.2, except shortraker and rougheye rockfish.
[7] Forage fish are defined at Table 2c to this part.
[8] All legally retained species of fish and shellfish, including CDQ halibut and IFQ halibut that are not listed as FMP groundfish in Tables 2a and 2c to this part.

[FR Doc. E8–31020 Filed 12–30–08; 8:45 am]
BILLING CODE 3510–22–C

Proposed Rules

Federal Register
Vol. 73, No. 251
Wednesday, December 31, 2008

This section of the FEDERAL REGISTER contains notices to the public of the proposed issuance of rules and regulations. The purpose of these notices is to give interested persons an opportunity to participate in the rule making prior to the adoption of the final rules.

SECURITIES AND EXCHANGE COMMISSION

17 CFR Part 200

[Release No. 34–59150; File No. S7–33–08]

Records Services, Fee Schedule

AGENCY: Securities and Exchange Commission.

ACTION: Proposed rule.

SUMMARY: The Securities and Exchange Commission (''Commission'') is soliciting comments on a proposed amendment to its regulation governing the fees for records services. The Commission's schedule of fees for records services will be updated using a formula for the calculation of fees under the Freedom of Information Act (''FOIA'') and language that directs FOIA requesters to the Commission's Web site. Using a formula, instead of set rates, will allow the Commission to charge fees that reflect its allowable direct costs.

DATES: Comments should be received on or before January 30, 2009.

ADDRESSES: Comments may be submitted by any of the following methods:

Electronic Comments

- Use the Commission's Internet comment form (*http://www.sec.gov/rules/proposed.shtml*);
- Send an e-mail to *rule-comments@sec.gov.* Please include File Number S7–33–08 on the subject line; or
- Use the Federal eRulemaking Portal (*http://www.regulations.gov*). Follow the instructions for submitting comments.

Paper Comments

- Send paper comments in triplicate to Secretary, Securities and Exchange Commission, 100 F Street, NE., Washington, DC 20549–1090.

All submissions should refer to File Number S7–33–08. This file number should be included on the subject line if e-mail is used. To help us process and review your comments more efficiently, please use only one method. The Commission will post all comments on the Commission's Internet Web site (*http://www.sec.gov/rules/proposed.shtml*). Comments are also available for public inspection and copying in the Commission's Public Reference Room, 100 F Street, NE., Washington, DC 20549 on official business days between the hours of 10 a.m. and 3 p.m. All comments received will be posted without change; we do not edit personal identifying information from submissions. You should submit only information that you wish to make available publicly.

FOR FURTHER INFORMATION CONTACT: Melinda Hardy, Assistant General Counsel, Office of the General Counsel, (202) 551–5149; Securities and Exchange Commission, 100 F Street, NE., Washington, DC 20549–9612.

SUPPLEMENTARY INFORMATION:

I. Discussion

The fees the Commission charges for searching, reviewing, and duplicating records pursuant to FOIA requests are set forth in 17 CFR 200.80e [Schedule of fees for records services]. The Commission believes it is appropriate to update its fee schedule for searching and reviewing records to comply with guidelines promulgated by the Office of Management and Budget, Uniform Freedom of Information Act Fee Schedule and Guidelines, 52 FR 10,012, 10,018 (Mar. 27, 1987) (''OMB Guidance''), which instructs agencies to charge fees that recoup the full allowable direct costs that they incur. The OMB Guidance states that agencies may charge the average basic pay rate of employees routinely performing these services plus 16% to cover associated benefits. *Id.* Also, ''agencies may establish an average rate for the range of grades typically involved.'' *Id.*

The current regulation contains set rates for FOIA request search and review activities: $16/hour for grade 11 and below; and $28/hour for grade 12 and above. The Commission is proposing to revise the regulation to provide the formula contained in the OMB Guidance rather than a set price. Moreover, the proposed regulation provides that the Commission will establish an average rate for each of the three different groups of grades typically involved: Personnel in grades SK 8 or below; personnel in grades SK 9 to 13; and personnel in grades SK 14 or above.[1] The Commission's Web site will contain current rates for search and review fees for each class. The rates will be updated when salaries change and will be determined by using the formula in the regulation and averaging the hourly rate of the different groups of grades of staff who routinely perform these duties. For the current calendar year, the fees would be assessed as follows: SK 8 or below: $26/hour; SK 9 to 13: $40/hour; and SK 14 or above: $70/hour. The cost of the average fee collection activity is $20; therefore, no fee will be charged of $20 or less. *See* 5 U.S.C. 552(a)(4)(A)(iv) (providing that no fee may be charged if fee exceeds costs of collecting and processing fee).

II. Statutory Basis

The Commission is proposing amendments to 17 CFR part 200 pursuant to 5 U.S.C. 552 and 15 U.S.C. 78d–1.

List of Subjects in 17 CFR Part 200

Administrative practice and procedure, Freedom of information, Organization and functions.

III. Text of Proposed Amendments

For the reasons set forth in the preamble, Title 17 Chapter II of the Code of Federal Regulations is proposed to be amended as follows:

PART 200—ORGANIZATION; CONDUCT AND ETHICS; AND INFORMATION AND REQUESTS

Subpart D—Information and Requests

1. The general authority citation for Part 200, subpart D, is revised to read as follows:

Authority: 5 U.S.C. 552, as amended, 15 U.S.C. 77f(d), 77s, 77ggg(a), 77sss, 78m(F)(3), 78w, 80a–37, 80a–44(a), 80a–44(b), 80b–10(a), 80b–11.

* * * * *

2. Section 200.80e, first paragraph, is revised to read as follows:

§ 200.80e Appendix E—Schedule of fees for records services.

Search and review services: The average salary rates (*i.e.*, basic pay plus

[1] Fees for searches of computerized records will continue to be based on the actual cost to the Commission which includes machine and operator time. 17 CFR 200.80(e)(9)(i).

16%) of employees performing these services. The hourly rates are listed on the Commission's Web site at *http://www.sec.gov/foia/feesche.htm.*

* * * * *

By the Commission.

Dated: December 23, 2008.

Florence E. Harmon,

Acting Secretary.

[FR Doc. E8–31127 Filed 12–30–08; 8:45 am]

BILLING CODE 8011–01–P

DEPARTMENT OF EDUCATION

34 CFR Chapter VI

Office of Postsecondary Education; Notice of Negotiated Rulemaking for Programs Authorized Under Title IV of the Higher Education Act of 1965, as Amended

AGENCY: Department of Education.

ACTION: Notice of establishment of negotiated rulemaking committees.

SUMMARY: We announce our intention to establish five negotiated rulemaking committees to prepare proposed regulations under Title IV of the Higher Education Act of 1965, as amended (HEA). Each committee will include representatives of organizations or groups with interests that are significantly affected by the subject matter of the proposed regulations. We request nominations for individual negotiators who represent key stakeholder constituencies that are involved in the student financial assistance and grant programs authorized under Title IV of the HEA to serve on these committees.

DATES: We must receive your nominations for negotiators to serve on the committees on or before January 23, 2009.

ADDRESSES: Please send your nominations for negotiators to Patty Chase, U.S. Department of Education, 1990 K Street, NW., room 8034, Washington, DC 20006, or by fax at (202) 502–7874. You may also e-mail your nominations to *Patty.Chase@ed.gov.* Nominees will be notified by letter whether or not they have been selected as negotiators, as soon as the Department's review process is completed.

FOR FURTHER INFORMATION CONTACT: For information about the nomination submission process contact: Wendy Macias, U.S. Department of Education, 1990 K Street, NW., room 8017, Washington, DC 20006. Telephone: (202) 502–7526. You may also e-mail your questions about the nomination submission process to: *Wendy.Macias@ed.gov.*

For information about negotiated rulemaking in general, see *The Negotiated Rulemaking Process for Title IV Regulations, Frequently Asked Questions* at *http://www.ed.gov/policy/highered/reg/hearulemaking/hea08/neg-reg-faq.html.* For further information contact: Wendy Macias, U.S. Department of Education, 1990 K Street, NW., room 8017, Washington, DC 20006. Telephone: (202) 502–7526. You may also e-mail your questions about negotiated rulemaking to: *Wendy.Macias@ed.gov.*

If you use a telecommunications device for the deaf (TDD), call the Federal Relay Service (FRS), toll free at 1–800–877–8339.

Individuals with disabilities can obtain this document in an accessible format (*e.g.*, braille, large print, audiotape, or computer diskette) by contacting Wendy Macias at the address, telephone number, or e-mail address listed above.

SUPPLEMENTARY INFORMATION: On September 8, 2008, we published a notice in the **Federal Register** (73 FR 51990) announcing our intent to establish negotiated rulemaking committees to develop proposed regulations to implement (1) the changes made to the HEA by the Higher Education Opportunity Act of 2008 (HEOA), Public Law 110–315, that affect programs authorized under Title IV of the HEA and, (2) possibly, the provision added to section 207(c) of the HEA by the HEOA that requires the Secretary to submit to a negotiated rulemaking process any regulations the Secretary chooses to develop under amended section 207(b)(2) of the HEA, regarding the prohibition on a teacher preparation program from which the State has withdrawn approval or terminated financial support from accepting or enrolling any student who received Title IV aid. We announced our intent to develop these proposed regulations by following the negotiated rulemaking procedures in section 492 of the HEA. The notice also announced a series of six regional hearings at which interested parties could suggest topics for consideration for action by the negotiating committees. We invited parties to submit topics for consideration in writing, as well. We heard testimony and received written comments from approximately 250 people. Transcripts from the hearings can be found at *http://www.ed.gov/HEOA.*

Regulatory Issues: After consideration of the information received at the regional hearings and in writing, we have decided to establish the following five negotiating committees:

- Team I—Loans–Lender/General Loan Issues;
- Team II—Loans–School–based Loan Issues;
- Team III—Accreditation;
- Team IV—Discretionary Grants;
- Team V—General and Non-Loan Programmatic Issues.

We list the topics each committee is likely to address elsewhere in this notice under *Committee Topics.*

Because of the large volume of changes made by the HEOA that must be implemented through negotiated rulemaking, not all provisions will be regulated at this time. In particular, the provisions affecting foreign schools (the majority of which are not effective until July 1, 2010) and unfunded programs will be regulated through the negotiated rulemaking process at a later date. For Team III—Accreditation, in addition to the provisions of the HEOA, we have included several issues identified during the 2007 negotiated rulemaking process, which did not result in published regulations.

As we did not receive any requests from the public to negotiate the provision added to section 207(c) of the HEA, and the Secretary has determined that it is not necessary to issue regulations in this area at this time, we will not be negotiating this provision of the HEOA in these negotiated rulemaking sessions. Regulations implementing HEOA changes to other areas of Title II of the HEA, as well as Titles III, V, VI, and VII, and those areas of Title I that do not affect the Title IV programs, will be implemented either through notice-and-comment rulemaking or, where the regulations will merely reflect the changes to the HEA and not expand upon those changes, without notice and comment. The only exception will be in the case of regulations that are needed to implement the initial grant competition under a new or substantially revised program authority; in these situations section 437(d)(1) of the General Education Provisions Act (20 U.S.C. § 1232(d)(1)) permits the Secretary to issue regulations without first soliciting public comment.

We intend to select participants for the negotiated rulemaking committees that represent the interests significantly affected by the proposed regulations. In so doing, we will follow the new requirement in section 492(b)(1) of the HEA that the individuals selected must have demonstrated expertise or experience in the relevant subjects under negotiation. We will also select

individual negotiators who reflect the diversity among program participants, in accordance with section 492(b)(1). Our goal is to establish committees that will allow significantly affected parties to be represented while keeping the committee size manageable.

The committees may create subgroups on particular topics that would involve additional individuals who are not members of the committees. Individuals who are not selected as members of the committees will be able to attend the meetings, have access to the individuals representing their constituencies, and participate in informal working groups on various issues between the meetings. The committee meetings will be open to the public.

The Department has identified the constituencies listed below as having interests that are significantly affected by the subject matter of the negotiated rulemaking process. The Department plans to seat as negotiators individuals from organizations or groups representing each of the constituencies. The Department anticipates that individuals from organizations or groups representing each of these constituencies will participate as members of one or more committees, except where noted. These constituencies are:

- Students;
- Legal assistance organizations that represent students;
- Financial aid administrators at institutions of higher education;
- Business officers and bursars at institutions of higher education;
- Institutional servicers (including collection agencies);
- State higher education executive officers;
- State Attorneys General and other appropriate State officials;
- State student grant agencies;
- Business and industry;
- Institutions of higher education eligible to receive.

Federal assistance under Title III, Parts A and B, and Title V of the HEA, which include Historically Black Colleges and Universities, Hispanic-Serving Institutions, American Indian Tribally Controlled Colleges and Universities, Alaska Native and Native Hawaiian-Serving Institutions, and other institutions with a substantial enrollment of needy students as defined in Title III of the HEA:

- Two-year public institutions of higher education;
- Four-year public institutions of higher education;
- Private, non-profit institutions of higher education;
- Private, for-profit institutions of higher education;
- Guaranty agencies and guaranty agency servicers (including collection agencies);
- Lenders, secondary markets, and loan servicers;
- Regional accrediting agencies;
- National accrediting agencies;
- Specialized accrediting agencies;
- State approval agencies;
- State student grant agencies;
- Special populations, including migrant and seasonal farmworkers, and entities that provide outreach and support services (for Team IV—Discretionary Grants);
- Individuals with intellectual disabilities (for Team V—General and Non-Loan Programmatic Issues, Student eligibility);
- Digital content owners (for Team V—General and Non-Loan Programmatic Issues, Peer-to-peer file sharing/ copyrighted material);
- Technology providers (for Team V—General and Non-Loan Programmatic Issues, Peer-to-peer file sharing/copyrighted material);
- Law enforcement (for Team V—General and Non-Loan Programmatic Issues, Campus safety issues);
- Campus safety (for Team V—General and Non-Loan Programmatic Issues, Campus safety issues).

The negotiation of proposed regulations for the following issues on the Team V agenda requires the representation of some very specific constituencies who are affected parties for purposes of these issues only:

- Title IV eligibility for individuals with intellectual disabilities;
- Peer-to-peer file sharing/ copyrighted material; and
- Campus safety (Hate crime reporting, Emergency response and evacuation procedures, Disclosure of fire safety standards and measures, and Missing person procedures).

For these issues, we will be selecting ''single-issue negotiators'' whose participation on the committee will be limited to the negotiation of only the specific issue. As previously noted, the committee may form subgroups for preliminary discussions of these, or other, issues to include individuals who are not members of the committee but who have expertise that would be helpful.

The goal of each committee is to develop proposed regulations that reflect a final consensus of the committee. Consensus means that there is no dissent by any member of the negotiating committee. An individual selected as a negotiator will be expected to represent the interests of their organization or group. If consensus is reached, all members of the organization or group represented by a negotiator are bound by the consensus and are prohibited from commenting negatively on the resulting proposed regulations. The Department will not consider any such negative comments that are submitted by members of such an organization or group.

Nominations should include:

- The name of the nominee, the organization or group the nominee represents, and a description of the interests that the nominee represents;
- Evidence of the nominee's expertise or experience in the subject, or subjects, to be negotiated;
- Evidence of support from individuals or groups of the constituency that the nominee will represent;
- The nominee's commitment that he or she will actively participate in good faith in the development of the proposed regulations; and
- The nominee's contact information, including address, phone number, fax number, and e-mail address.

For a better understanding of the process, nominees should review *The Negotiated Rulemaking Process for Title IV Regulations, Frequently Asked Questions* at *http://www.ed.gov/policy/highered/reg/hearulemaking/hea08/neg-reg-faq.html* prior to committing to serve as a negotiator.

Committee Topics

The topics the committees are likely to address are:

Team I—Loans—Lender/General Loan Issues

- Loan discharges based on total and permanent disability (including Perkins Loans) (HEOA section 437);
- Federal PLUS loan repayment, post-half-time enrollment deferment, and interest capitalization (HEOA section 424);
- Consumer credit reporting after loan rehabilitation/Eligibility for loan rehabilitation (HEOA section 426);
- FFEL and Direct Loan teacher loan forgiveness (HEOA sections 429 and 454);
- Applicability of the Servicemembers Civil Relief Act to Federal Family Education Loan (FFEL) and Direct Loan borrowers and related FFEL lender special allowance payment calculations on affected loans (PLUS endorsers) (HEOA section 422);
- Borrower eligibility for deferment (HEOA section 422);
- Changes to prohibited inducement provisions governing FFEL lenders and guaranty agencies (HEOA sections 422 and 436);
- FFEL Consolidation Loan-borrower eligibility (HEOA section 425);

• New audit requirement for FFEL school lenders and Eligible Lender Trustees (ELTs) originating FFEL loans for an institution or school-affiliated organization (HEOA section 436);

• Required education loan borrower disclosures by lenders (HEOA section 120);

• Definitions (Education loan, Private education loan, Lender, Preferred lender arrangement);

• Required lender disclosures;

• Required lender reporting and certification;

• Lender forbearance information and contact requirements (HEOA section 422);

• Guaranty agency notifications to borrowers in default (HEOA section 422);

• Financial and economic literacy information for rehabilitated borrowers (HEOA section 426);

• Required lender disclosures to FFEL borrowers (HEOA section 434);

• Required FFEL (non-consolidation) disclosures before loan disbursement;

• Required FFEL (non-consolidation) borrower disclosures before repayment;

• Special disclosure rules on PLUS and Unsubsidized loans;

• New borrower disclosures during repayment;

• Notification to a FFEL borrower when the transfer, sale, or assignment of a loan will result in a change in the party to whom the borrower must send payments (HEOA section 422);

• FFEL Consolidation Loan-application disclosures to Perkins Loan and Direct Loan borrowers (HEOA section 425).

• Consumer education information provided by guaranty agencies (HEOA section 435).

Team II—Loans—School-based Loan Issues

• Cohort default rate calculation, default prevention plans, and institutional eligibility (HEOA section 436);

• Exit counseling (HEOA section 488(b));

• Entrance counseling (HEOA section 488(g));

• Program Participation Agreement (HEOA section 493);

• Code of Conduct;

• Preferred Lender Lists;

• Private Education Loan Certification;

• Required education loan borrower disclosures by institutions of higher education, and institution-affiliated organizations (HEOA section 120);

• Definitions (Covered institution, Institution-affiliated organization, Officer, Agent);

• Required borrower disclosures by covered institutions and institution-affiliated organizations that participate in a preferred lender arrangement;

• Required reporting by covered institutions and institution-affiliated organizations;

• Other covered institution and institution-affiliated requirements;

• Information and dissemination activities—terms and conditions under which students receive FFEL, Direct Loans and Perkins Loans (HEOA section 488(a));

• Disclosure of reimbursements for service on advisory boards (HEOA section 1011);

• Direct Loan borrower disclosures by Direct Loan schools (HEOA section 451);

• Perkins Loan Program;

• Mandatory assignment (HEOA section 463);

• Reinstatement of loans discharged due to death or disability if the borrower receives another Title IV loan; if the borrower earns income in excess of the poverty line; or if the Secretary determines it is necessary to resume collection (HEOA section 464);

• Expansion of teacher, Head Start, and law enforcement cancellation categories (HEOA section 465);

• Addition of new public service cancellation categories (HEOA section 465);

• Military service cancellation (HEOA section 465).

Team III—Accreditation

• Distance education and correspondence education (HEOA sections 495(1)(A) and (5));

• Due process and appeals (HEOA section 495(1)(C));

• Accreditation team members (HEOA section 495(2)(A));

• Operating Procedures (HEOA section 495(2)(C));

• Growth monitoring;

• Teach-out plan approval;

• Summary of agency actions;

• Confirmation of disclosure of transfer of credit policies and criteria.

(The following issues are not from changes made by the HEOA, but were identified during the 2007 negotiated rulemaking process, which did not result in published regulations.)

• Recognition when not fully compliant;

• Demonstration of compliance within 12 months;

• Direct assessment programs definition;

• Definition of recognition;

• Substantive change;

• Monitoring throughout period;

• Subparts C and D—Recognition process, limitation, suspension and termination;

• Recordkeeping;

• Confidentiality.

Team IV—Discretionary Grants

• TRIO Programs;

• Branch campuses and different populations (HEOA section 403(a));

• Appeals process for unsuccessful TRIO grant applicants (HEOA section 403(a));

• Revised outcome criteria and measurement of progress (HEOA section 403(a));

• Foster care and homeless youth (HEOA section 403(a));

• Required services and permissible services (HEOA section 403);

• GEAR UP (HEOA section 404);

• Priority;

• Funding rules;

• Duration of awards;

• Revised definition of partnerships;

• Changes to matching funds;

• Waiver of matching funds;

• Revision to required and allowable activities under GEAR UP;

• Revised scholarships;

• Establishment of a scholarship trust fund;

• Redistribution or return to the Department of Education of unused scholarship funds after six years;

• Special Programs for Students Whose Families are Engaged in Migrant and Seasonal Farmwork (HEOA section 408);

• High school equivalency program eligibility and activities;

• College assistance migrant program eligibility and activities;

• Reservation and allocation of funds.

Team V—General and Non-Loan Programmatic Issues

• Readmission requirements for servicemembers (HEOA section 487);

• 90/10 rule (HEOA section 493);

• Institutional requirements for teach-out/eligibility and certification procedures-treatment of teach-outs (HEOA sections 493(f) and 496);

• Financial assistance for individuals with intellectual disabilities (HEOA sections 485(a)(8) and 709) (including ''student with an intellectual disability'' and ''comprehensive transition and postsecondary programs for students with intellectual disabilities,'' definitions in Title VII of the HEA that apply);

• Definition of baccalaureate ''liberal arts'' programs offered by proprietary schools (HEOA section 102(d)(1)(A)(i));

- Consumer information;
- Peer-to-peer file sharing/copyrighted material (HEOA sections 488(a) and 493);
- Institutional plans for improving the academic program (HEOA section 488(a));
- Placement of and types of employment obtained by graduates of degree or certificate programs/types of graduate and professional education (HEOA section 488(a));
- Retention rates (HEOA section 488(a));
- Hate crime reporting (HEOA section 488(e));
- Emergency response and evacuation procedures (HEOA section 488(e));
- Disclosure of fire safety standards and measures (HEOA sections 488(a));
- Missing person procedures (HEOA section 488(g));
- Year-round Pell Grant (HEOA section 401);
- Pell Grants and Children of Soldiers (HEOA section (HEOA section 401);
- TEACH Grants-extenuating circumstances (HEOA section 412(a)(1));
- Federal Work Study (FWS);
- Definition of community service (HEOA section 441(2));
- Grants for FWS Program (HEOA section 443);
- Flexible use of funds (HEOA section 444);
- Additional funds for off-campus community service (HEOA section 446);
- Work Colleges (HEOA section 447);
- LEAP/Grants for Access and Persistence (GAP) Program (HEOA section 407);
- Notification to students;
- GAP non-Federal share;
- Application for an allotment under GAP;
- Roles of partners in GAP;
- GAP Program activities;
- Applicability of LEAP Program requirements in GAP;
- GAP maintenance of effort requirement.

These topics are tentative. Topics may be added or removed as the process continues.

Schedule for Negotiations

We anticipate that negotiations for these committees will begin in February 2009, with each committee meeting for three sessions of approximately three days at roughly monthly intervals. The committees will meet in the Washington, DC area. The dates and locations of these meetings will be published in a subsequent notice in the **Federal Register**, and will be posted on the Department's Web site at: *http://www.ed.gov/HEOA*. Please note that the upcoming personnel changes in the executive branch of the Federal government may affect these plans.

The schedule for negotiations has been developed to ensure publication of the final regulations by the November 1 statutory deadline for publishing student financial assistance final regulations (to be addressed by Teams I, II, III, and V). Although not subject to the November 1 statutory deadline, the schedule for the Title IV discretionary grant programs (to be addressed by Team IV) will provide for the publication of regulations in time for competitions to be held during fiscal year 2010.

Electronic Access to This Document

You may view this document, in text or Adobe Portable Document Format (PDF), on the Internet at the following site: *http://www.ed.gov/news/fedregister*. To use PDF you must have Adobe Acrobat Reader, which is available free at this site. If you have questions about using PDF, call the U.S. Government Printing Office toll free at 1–888–293–6498; or in the Washington, DC area at (202) 512–1530.

Note: The official version of this document is the document published in the **Federal Register**. Free Internet access to the official edition of the **Federal Register** and the Code of Federal Regulations is available on GPO Access at: *http://www.gpoaccess.gov/nara/index.html*.

Program Authority: 20 U.S.C. 1098a.

Dated: December 24, 2008.

Vince Sampson,

Deputy Assistant Secretary for Postsecondary Education.

[FR Doc. E8–31176 Filed 12–30–08; 8:45 am]

BILLING CODE 4000–01–P

ENVIRONMENTAL PROTECTION AGENCY

40 CFR Part 180

[EPA–HQ–OPP–2008–0834; FRL–8394–7]

Azinphos-methyl, Disulfoton, Esfenvalerate, Ethylene oxide, Fenvalerate, et al.; Proposed Tolerance Actions

AGENCY: Environmental Protection Agency (EPA).

ACTION: Proposed rule.

SUMMARY: EPA is proposing to revoke certain tolerances for the fungicides prothioconazole and thiabendazole; the herbicide primisulfuron- methyl; and the insecticides azinphos-methyl, disulfoton, esfenvalerate, fenvalerate, and phosalone; the plant growth regulator 1-naphthaleneacetic acid; and the antimicrobial/insecticidal agent ethylene oxide. Also, EPA is proposing to modify certain tolerances for the insecticides disulfoton, esfenvalerate, and phosmet; and the plant growth regulator 1-naphthaleneacetic acid. In addition, EPA is proposing to establish new tolerances for the insecticides disulfoton, esfenvalerate, and phosmet; and the antimicrobial/insecticidal agent ethylene oxide and ethylene chlorohydrin (a reaction product formed during the fumigation/sterilization process). The regulatory actions proposed in this document are in follow-up to the Agency's reregistration program under the Federal Insecticide, Fungicide, and Rodenticide Act (FIFRA), and tolerance reassessment program under the Federal Food, Drug, and Cosmetic Act (FFDCA), section 408(q).

DATES: Comments must be received on or before March 2, 2009.

ADDRESSES: Submit your comments, identified by docket identification (ID) number EPA–HQ–OPP–2008–0834, by one of the following methods:

- *Federal eRulemaking Portal*: *http://www.regulations.gov*. Follow the online instructions for submitting comments.
- *Mail*: Office of Pesticide Programs (OPP) Regulatory Public Docket (7502P), Environmental Protection Agency, 1200 Pennsylvania Ave., NW., Washington, DC 20460–0001.
- *Delivery*: OPP Regulatory Public Docket (7502P), Environmental Protection Agency, Rm. S–4400, One Potomac Yard (South Bldg.), 2777 S. Crystal Dr., Arlington, VA. Deliveries are only accepted during the Docket Facility's normal hours of operation (8:30 a.m. to 4 p.m., Monday through Friday, excluding legal holidays). Special arrangements should be made for deliveries of boxed information. The Docket Facility telephone number is (703) 305–5805.

Instructions: Direct your comments to docket ID number EPA–HQ–OPP–2008–0834. EPA's policy is that all comments received will be included in the docket without change and may be made available online at *http://www.regulations.gov*, including any personal information provided, unless the comment includes information claimed to be Confidential Business Information (CBI) or other information whose disclosure is restricted by statute. Do not submit information that you consider to be CBI or otherwise protected through regulations.gov or e-mail. The regulations.gov website is an ''anonymous access'' system, which

means EPA will not know your identity or contact information unless you provide it in the body of your comment. If you send an e-mail comment directly to EPA without going through regulations.gov, your e-mail address will be automatically captured and included as part of the comment that is placed in the docket and made available on the Internet. If you submit an electronic comment, EPA recommends that you include your name and other contact information in the body of your comment and with any disk or CD-ROM you submit. If EPA cannot read your comment due to technical difficulties and cannot contact you for clarification, EPA may not be able to consider your comment. Electronic files should avoid the use of special characters, any form of encryption, and be free of any defects or viruses.

Docket: All documents in the docket are listed in the docket index available at *http://www.regulations.gov*. Although listed in the index, some information is not publicly available, e.g., CBI or other information whose disclosure is restricted by statute. Certain other material, such as copyrighted material, is not placed on the Internet and will be publicly available only in hard copy form. Publicly available docket materials are available either in the electronic docket at *http://www.regulations.gov*, or, if only available in hard copy, at the OPP Regulatory Public Docket in Rm. S–4400, One Potomac Yard (South Bldg.), 2777 S. Crystal Dr., Arlington, VA. The hours of operation of this Docket Facility are from 8:30 a.m. to 4 p.m., Monday through Friday, excluding legal holidays. The Docket Facility telephone number is (703) 305–5805.

FOR FURTHER INFORMATION CONTACT:

Joseph Nevola, Special Review and Reregistration Division (7508P), Office of Pesticide Programs, Environmental Protection Agency, 1200 Pennsylvania Ave, NW., Washington, DC 20460–0001; telephone number: (703) 308–8037; e-mail address: *nevola.joseph@epa.gov*.

SUPPLEMENTARY INFORMATION:

I. General Information

A. Does this Action Apply to Me?

You may be potentially affected by this action if you are an agricultural producer, food manufacturer, or pesticide manufacturer. Potentially affected entities may include, but are not limited to:

- Crop production (NAICS code 111).
- Animal production (NAICS code 112).
- Food manufacturing (NAICS code 311).
- Pesticide manufacturing (NAICS code 32532).

This listing is not intended to be exhaustive, but rather provides a guide for readers regarding entities likely to be affected by this action. Other types of entities not listed in this unit could also be affected. The North American Industrial Classification System (NAICS) codes have been provided to assist you and others in determining whether this action might apply to certain entities. To determine whether you or your business may be affected by this action, you should carefully examine the applicability provisions in Unit II.A. If you have any questions regarding the applicability of this action to a particular entity, consult the person listed under **FOR FURTHER INFORMATION CONTACT**.

B. What Should I Consider as I Prepare My Comments for EPA?

1. *Submitting CBI*. Do not submit this information to EPA through regulations.gov or e-mail. Clearly mark the part or all of the information that you claim to be CBI. For CBI information in a disk or CD-ROM that you mail to EPA, mark the outside of the disk or CD-ROM as CBI and then identify electronically within the disk or CD-ROM the specific information that is claimed as CBI. In addition to one complete version of the comment that includes information claimed as CBI, a copy of the comment that does not contain the information claimed as CBI must be submitted for inclusion in the public docket. Information so marked will not be disclosed except in accordance with procedures set forth in 40 CFR part 2.

2. *Tips for preparing your comments*. When submitting comments, remember to:

i. Identify the document by docket ID number and other identifying information (subject heading, **Federal Register** date and page number).

ii. Follow directions. The Agency may ask you to respond to specific questions or organize comments by referencing a Code of Federal Regulations (CFR) part or section number.

iii. Explain why you agree or disagree; suggest alternatives and substitute language for your requested changes.

iv. Describe any assumptions and provide any technical information and/or data that you used.

v. If you estimate potential costs or burdens, explain how you arrived at your estimate in sufficient detail to allow for it to be reproduced.

vi. Provide specific examples to illustrate your concerns and suggest alternatives.

vii. Explain your views as clearly as possible, avoiding the use of profanity or personal threats.

viii. Make sure to submit your comments by the comment period deadline identified.

C. What Can I do if I Wish the Agency to Maintain a Tolerance that the Agency Proposes to Revoke?

This proposed rule provides a comment period of 60 days for any person to state an interest in retaining a tolerance proposed for revocation. If EPA receives a comment within the 60–day period to that effect, EPA will not proceed to revoke the tolerance immediately. However, EPA will take steps to ensure the submission of any needed supporting data and will issue an order in the **Federal Register** under FFDCA section 408(f), if needed. The order would specify data needed and the timeframes for its submission, and would require that within 90 days some person or persons notify EPA that they will submit the data. If the data are not submitted as required in the order, EPA will take appropriate action under FFDCA.

EPA issues a final rule after considering comments that are submitted in response to this proposed rule. In addition to submitting comments in response to this proposal, you may also submit an objection at the time of the final rule. If you fail to file an objection to the final rule within the time period specified, you will have waived the right to raise any issues resolved in the final rule. After the specified time, issues resolved in the final rule cannot be raised again in any subsequent proceedings.

II. Background

A. What Action is the Agency Taking?

EPA is proposing to revoke, modify, and establish specific tolerances for residues of the fungicides prothioconazole and thiabendazole; the herbicide primisulfuron-methyl; and the insecticides azinphos-methyl, disulfoton, esfenvalerate, fenvalerate, phosalone, and phosmet; the plant growth regulator 1-naphthaleneacetic acid; and the antimicrobial/insecticidal agent ethylene oxide and its reaction product ethylene chlorohydrin in or on commodities listed in the regulatory text.

EPA is proposing these tolerance actions for disulfoton, ethylene oxide, 1-naphthaleneacetic acid, and phosmet to implement the tolerance recommendations made during the reregistration and tolerance reassessment processes (including

follow-up on canceled or additional uses of pesticides). However, in the case of prothioconazole, the proposed tolerance revocation herein is not associated with the reregistration or tolerance reassessment processes, but rather with an existing label prohibition. In the cases of azinphos-methyl, fenvalerate, primisulfuron-methyl, and thiabendazole, the proposed tolerance revocations herein are associated with no active U.S. registrations for specific food uses, and in the case of phosalone, the proposed revocations are associated with a follow-up to the withdrawal of a comment to maintain tolerances for import purposes, as described in Unit II.A. In the case of esfenvalerate, an isomer of fenvalerate, proposed tolerances to be established (for those food commodities with U.S. registrations for esfenvalerate) are being converted from fenvalerate tolerances due to a phase out of fenvalerate use in the United States, and the proposed tolerance revocation on a processed commodity tolerance is associated with data that shows such residues are covered by the appropriate tolerance on the raw agricultural commodity for which the Agency is proposing a decreased level herein. As part of these processes, EPA is required to determine whether each of the amended tolerances meets the safety standard of FFDCA. The safety finding determination of ''reasonable certainty of no harm'' is discussed in detail in each Reregistration Eligibility Decision (RED) and Report of the Food Quality Protection Act (FQPA) Tolerance Reassessment Progress and Risk Management Decision (TRED) for the active ingredient. REDs and TREDs recommend the implementation of certain tolerance actions, including modifications to reflect current use patterns, meet safety findings, and change commodity names and groupings in accordance with new EPA policy. Printed copies of many REDs and TREDs may be obtained from EPA's National Service Center for Environmental Publications (EPA/NSCEP), P.O. Box 42419, Cincinnati, OH 45242–2419; telephone number: 1–800–490–9198; fax number: 1–513–489–8695; Internet at *http://www.epa.gov/ncepihom* and from the National Technical Information Service (NTIS), 5285 Port Royal Rd., Springfield, VA 22161; telephone number: 1–800–553–6847 or (703) 605–6000; Internet at *http://www.ntis.gov*. Electronic copies of REDs and TREDs are available on the Internet in public dockets for 1-naphthaleneacetic acid (EPA–HQ–OPP–2006–0507) and TREDs for ethylene oxide (EPA–HQ–OPP–2005–0203) and primisulfuron-methyl (EPA–HQ–OPP–2002–0163) at *http://www.regulations.gov* and REDs for azinphos-methyl, disulfoton, phosmet, and thiabendazole at *http://www.epa.gov/pesticides/reregistration/status.htm*.

The selection of an individual tolerance level is based on crop field residue studies designed to produce the maximum residues under the existing or proposed product label. Generally, the level selected for a tolerance is a value slightly above the maximum residue found in such studies, provided that the tolerance is safe. The evaluation of whether a tolerance is safe is a separate inquiry. EPA recommends the raising of a tolerance when data show that:

- Lawful use (sometimes through a label change) may result in a higher residue level on the commodity.
- The tolerance remains safe, notwithstanding increased residue level allowed under the tolerance.

In REDs, Chapter IV on ''Risk Management, Reregistration, and Tolerance Reassessment'' typically describes the regulatory position, FQPA assessment, cumulative safety determination, determination of safety for U.S. general population, and safety for infants and children. In particular, the human health risk assessment document which supports the RED describes risk exposure estimates and whether the Agency has concerns. In TREDs, the Agency discusses its evaluation of the dietary risk associated with the active ingredient and whether it can determine that there is a reasonable certainty (with appropriate mitigation) that no harm to any population subgroup will result from aggregate exposure. EPA also seeks to harmonize tolerances with international standards set by the Codex Alimentarius Commission, as described in Unit III.

Explanations for proposed modifications in tolerances and/or establishments of tolerances for disulfoton, ethylene oxide, 1-naphthaleneactic acid, and phosmet can be found in the RED and TRED document and in more detail in the Residue Chemistry Chapter document which supports the RED and TRED. Esfenvalerate was not subject to the reregistration program because it was registered after November 1, 1984. However, the explanation for the proposed modification in one tolerance and establishments of other tolerances for esvenvalerate can be found in the Residue Chemistry Chapter available in the public docket for this proposed rule. Copies of the Residue Chemistry Chapter documents are found in the Administrative Record and paper copies for ethylene oxide and 1-naphthaleneacetic acid can be found under their respective public docket ID numbers, identified in Unit II.A. Paper copies for disulfoton, esfenvalerate, and phosmet are available in the public docket for this proposed rule. Electronic copies are available through EPA's electronic public docket and comment system, regulations.gov at *http://www.regulations.gov*. You may search for docket ID number EPA–HQ–OPP–2008–0834, then click on that docket ID number to view its contents.

EPA has determined that the aggregate exposures and risks are not of concern for the above mentioned pesticide active ingredients based upon the data identified in the RED or TRED which lists the submitted studies that the Agency found acceptable.

EPA has found that the tolerances that are proposed in this document to be modified, are safe; i.e., that there is a reasonable certainty that no harm will result to infants and children from aggregate exposure to the pesticide chemical residues, in accordance with FFDCA section 408(b)(2)(C). (Note that changes to tolerance nomenclature do not constitute modifications of tolerances). These findings are discussed in detail in each RED or TRED. The references are available for inspection as described in this document under **SUPPLEMENTARY INFORMATION**.

In addition, EPA is proposing to revoke certain specific tolerances because either they are no longer needed or are associated with food uses that are no longer registered under FIFRA. Those instances where registrations were canceled were because the registrant failed to pay the required maintenance fee and/or the registrant voluntarily requested cancellation of one or more registered uses of the pesticide. It is EPA's general practice to propose revocation of those tolerances for residues of pesticide active ingredients on crop uses for which there are no active registrations under FIFRA, unless any person in comments on the proposal indicates a need for the tolerance to cover residues in or on imported commodities or legally treated domestic commodities.

1. *Azinphos-methyl*. On December 28, 2005 (70 FR 76827) (FRL–7752–5), the Agency published a notice in the **Federal Register** and approved requests from registrants to voluntarily amend their product registrations to terminate certain azinphos-methyl uses effective December 28, 2005. These amendments follow a September 30, 2002 **Federal Register** Notice of Receipt of Requests

(67 FR 61337) (FRL–7199–6) from the azinphos-methyl registrants to amend their product registrations to terminate certain uses. The amendments terminated azinphos-methyl use on a number of commodities, including alfalfa, bean (succulent and snap), broccoli, cabbage (including chinese), cauliflower, celery, citrus, clover, cucumber, eggplant, grape, hazelnut (filbert), melon, onion (green and dry bulb), pecan, pepper, fresh plum, dried plum, quince, spinach, strawberry, tomato, and birdsfoot trefoil. All sale and distribution of existing stocks of end-use products bearing these uses by registrants was prohibited 90-calendar days after receipt of EPA approved revised labels reflecting the use deletions; i.e., after August 2003. The Agency believes that end users will have had sufficient time to exhaust existing stocks and for treated commodities to have cleared the channels of trade. Therefore the associated tolerances are no longer needed. Consequently, EPA is proposing to revoke the tolerances in 40 CFR 180.154 on alfalfa, forage; alfalfa, hay; bean, snap, succulent; broccoli; cabbage; cauliflower; celery; clover, forage; clover, hay; cucumber; eggplant; fruit, citrus, group 10; grape; hazelnut; melon; onion; pecan; pepper; plum, prune; quince; spinach; strawberry; tomato, postharvest; trefoil, forage; and trefoil, hay.

On July 5, 2006 (71 FR 38148) (FRL–8076–4) and March 29, 2006 (71 FR 15731) (FRL–7771–4), the Agency published notices in the **Federal Register** and approved requests from registrants to voluntarily amend their product registrations to terminate certain azinphos-methyl uses on caneberry (blackberry, boysenberry, loganberry, raspberry), cotton, cranberry, nectarine (covered by the peach tolerance under 40 CFR 180.1(g)), peach, and potato effective September 30, 2006. The Agency believes that end users will have had sufficient time for treated commodities to have cleared the channels of trade. Therefore the associated tolerances are no longer needed. Consequently, EPA is proposing to revoke the tolerances in 40 CFR 180.154 on blackberry; boysenberry; cotton, undelinted seed; cranberry; loganberry; peach; potato; and raspberry.

On March 26, 2008 (73 FR 16006) (FRL–8355–1) and February 20, 2008 (73 FR 9328) (FRL–8349–8), the Agency published notices in the **Federal Register** and approved requests from registrants to voluntarily cancel and amend their product registrations to terminate azinphos-methyl uses on Brussels sprouts effective September 30, 2008, on almonds, pistachios, and walnuts effective October 30, 2009, and on apples, blueberries, cherries, parsley, and pears effective September 30, 2012. Treated commodities subject to the final rule and that are in the channels of trade following the tolerance revocations are subject to FFDCA section 408(l)(5). Residues of pesticides whose tolerances have been revoked do not render the food adulterated so long as it is shown to the satisfaction of the Food and Drug Administration that residue is present as the result of an application or use of the pesticide at a time and in a manner that was lawful under FIFRA and the residue does not exceed the level that was authorized at the time of the application or use to be present on the food under a tolerance or exemption from tolerance. Evidence to show that food was lawfully treated may include records that verify the dates that the pesticide was applied to such food. Therefore, the associated tolerances will no longer be needed after the last use dates specified. Consequently, EPA is proposing to revoke the tolerances in 40 CFR 180.154 on Brussels sprouts on the date of publication of the final rule in the **Federal Register**, on almond; almond, hulls; pistachio; and walnut; each with an expiration/revocation date of October 30, 2009, and on apple; crabapple; blueberry; cherry; parsley, leaves; parsley, turnip rooted, roots; and pear; each with an expiration/revocation date of September 30, 2012.

In addition, because the tolerance expired on June 30, 2000, EPA is proposing to remove the tolerance in 40 CFR 180.154 on sugarcane, cane.

Also, EPA is proposing to revise the section heading in 40 CFR 180.154 from *O,O*-Dimethyl *S*-[(4-oxo-1,2,3-benzotriazin-3(4H)-yl)methyl]phosphorodithioate to that of azinphos-methyl.

There are Codex Maximum Residue Limits (MRLs) for residues of azinphos-methyl on alfalfa forage; almonds; almond hulls; apple; blueberries; broccoli; cherries; clover hay or fodder; cottonseed; cranberry; cucumber; fruits (except as otherwise listed); melons, except watermelon; peach; pear; pecan; peppers, chili (dry); peppers, sweet; plums (including prunes); potato; tomato; vegetables (except as otherwise listed); and walnuts.

2. *Disulfoton, O,O-Diethyl S-[2-(ethylthio)ethyl]phosphorodithioate.* Currently, tolerances for disulfoton in 40 CFR 180.183(a) and (c) are established for the combined residues of disulfoton, *O,O*-diethyl *S*-[2-(ethylthio)ethyl] phosphorodithioate, and its cholinesterase-inhibiting metabolites, calculated as demeton. Based on plant and animal metabolism data, the Agency determined that residues of concern should include the sulfoxide and sulfone degradates and oxygen analogues of the sulfoxide and sulfone degradates and calculated as disulfoton in compatibility with the Codex expression. Therefore, EPA is proposing to revise the introductory text containing the tolerance expression in 40 CFR 180.183(a) to read as follows: ''Tolerances are established for the combined residues of the insecticide disulfoton, *O,O*-diethyl *S*-[2-(ethylthio)ethyl] phosphorodithioate; demeton-*S*, *O,O*-diethyl *S*-[2-(ethylthio)ethyl] phosphorothioate; disulfoton sulfoxide, *O,O*-diethyl *S*-[2-(ethylsulfinyl)ethyl] phosphorodithioate; disulfoton oxygen analog sulfoxide, *O,O*-diethyl *S*-[2-(ethylsulfinyl)ethyl] phosphorothioate; disulfoton sulfone, *O,O*-diethyl *S*-[2-(ethylsulfonyl)ethyl] phosphorodithioate; and disulfoton oxygen analog sulfone, *O,O*-diethyl *S*-[2-(ethylsulfonyl)ethyl] phosphorothioate; calculated as disulfoton, in or on food commodities as follows.''

Also, EPA is proposing to revise the introductory text containing the tolerance expression in 40 CFR 180.183(c) to read as follows: ''Tolerances with regional registration are established for the combined residues of the insecticide disulfoton, *O,O*-diethyl *S*-[2-(ethylthio)ethyl] phosphorodithioate; demeton-*S*, *O,O*-diethyl *S*-[2-(ethylthio)ethyl] phosphorothioate; disulfoton sulfoxide, *O,O*-diethyl *S*-[2-(ethylsulfinyl)ethyl] phosphorodithioate; disulfoton oxygen analog sulfoxide, *O,O*-diethyl *S*-[2-(ethylsulfinyl)ethyl] phosphorothioate; disulfoton sulfone, *O,O*-diethyl *S*-[2-(ethylsulfonyl)ethyl] phosphorodithioate; and disulfoton oxygen analog sulfone, *O,O*-diethyl *S*-[2-(ethylsulfonyl)ethyl] phosphorothioate; calculated as disulfoton, in or on food commodities as follows.''

In the **Federal Register** of May 21, 2008 (73 FR 29507) (FRL–8364–7), EPA issued a notice regarding EPA's announcement of the receipt of requests from a registrant to voluntarily amend certain registrations for disulfoton, including deletion of the last barley and wheat uses from disulfoton registrations. EPA approved the barley and wheat use deletions for disulfoton and issued a cancellation order on July 30, 2008 (73 FR 44263) (FRL–8375–7) and permitted the registrants to sell and distribute product under the previously approved labeling for a period of 6 months after the effective date of the cancellation order; i.e., until January 30,

2009. The Agency believes that end users will have had sufficient time to exhaust existing stocks and for disulfoton-treated barley and wheat commodities to have cleared the channels of trade by January 30, 2010. Therefore, EPA is proposing to revoke the tolerances in 40 CFR 180.183(a) on barley, grain; barley, straw; wheat, hay; wheat, grain; and wheat, straw; each with an expiration/revocation date of January 30, 2010. In addition, based on field trial data and in order to be compatible with Codex MRLs of 0.2 milligram/kilogram (mg/kg), EPA determined that the tolerance on wheat, grain should be decreased from 0.3 to 0.2 parts per million (ppm). Also, the Agency determined that wheat data may be translated to barley and the tolerance on barley, grain should be decreased from 0.75 to 0.2 ppm. Therefore, EPA is proposing to decrease the tolerances in 40 CFR 180.183 on barley, grain and wheat, grain; each to 0.2 ppm, the appropriate tolerance level for the interim period before each tolerance expires on January 30, 2010.

Available wheat processing data showed that disulfoton residues of concern concentrated in wheat aspirated grain fractions at 1.35X and based on a reassessed tolerance for wheat, grain at 0.2 ppm (see the disulfoton RED), and the translation of wheat data to barley, EPA determined that a tolerance should be established on aspirated grain fractions at 0.3 ppm. Therefore, EPA is proposing to establish a tolerance in 40 CFR 180.183(a) on grain, aspirated fractions at 0.3 ppm with an expiration/revocation date of January 30, 2010.

Based on available field trial data that showed combined disulfoton residues of concern as high as <0.2 ppm on coffee beans, EPA determined that the tolerance should be decreased from 0.3 to 0.2 ppm. Therefore, EPA is proposing to decrease the tolerance in 40 CFR 180.183(a) on coffee, bean to 0.2 ppm.

In the **Federal Register** of September 12, 2008 (73 FR 53007) (FRL–8380–7), EPA issued a notice regarding EPA's announcement of the receipt of requests from a registrant to voluntarily cancel certain registrations for disulfoton, including termination of the last spinach and tomato uses from disulfoton registrations. On October 14, 2008, EPA approved the registration cancellations for disulfoton and issued a cancellation order to the registrant and permitted the registrant to sell and distribute product under the previously approved labeling until April 11, 2009. Typically, the Agency will permit a registrant to sell and distribute existing stocks for 1 year after the date the cancellation request was received. Such policy is in accordance with the Agency's statement of policy as set forth in the **Federal Register** of June 26, 1991 (56 FR 29362) (FRL–3846–4). However, in this case, the registrant, Bonide Products, Inc. (Bonide), has provided information to the Agency that these registrations were dormant, the pesticide has not been recently produced or distributed by Bonide, and that no existing stocks provision is needed by Bonide in association with these cancellation requests. However, in its request of April 11, 2008 for voluntary cancellation, Bonide noted that previously sold/distributed product may be in the channels of trade. The Agency believes that end users will have had sufficient time (18 months) to exhaust existing stocks and for disulfoton-treated spinach and tomato commodities to have cleared the channels of trade by October 14, 2009. Therefore, EPA is proposing to revoke the tolerances in 40 CFR 180.183(a) on spinach and tomato; each with an expiration/revocation date of October 14, 2009.

Also, in **Federal Register** notices of September 12, 2008 (73 FR 53007) (FRL–8380–7) and May 21, 2008 (73 FR 29507) (FRL–8364–7), EPA announced the receipt of requests from registrants to voluntarily cancel certain or amend registrations for disulfoton, which include the last potato use registrations. On October 14, 2008, the Agency issued a cancellation order for specific Bonide registrations and permitted the registrant to sell and distribute product under the previously approved labeling until April 11, 2009. However, Bonide, the registrant, had informed the Agency in its request of April 11, 2008, that while the associated registrations were dormant ones where the pesticide has not been recently produced or distributed by the registrant such that it did not need an existing stocks provision, previously sold/distributed product in the channels of trade would need an existing stocks provision. The Agency believes that end users will have had sufficient time to exhaust existing stocks and for disulfoton-treated potato commodities to have cleared the channels of trade by October 14, 2009. However, the Agency issued an order on July 30, 2008 (73 FR 44263) (FRL–8375–7) to amend and terminate certain uses, including potato, for specific Bayer CropSciences registrations and permitted the registrant to sell and distribute product under the previously approved labeling until January 30, 2009. The Agency believes that end users will have had sufficient time to exhaust existing stocks and for disulfoton-treated potato commodities to have cleared the channels of trade by January 30, 2010. Consequently, using the latter date, EPA is proposing to revoke the tolerance in 40 CFR 180.183(a) on potato with an expiration/revocation date of January 30, 2010. In addition, based on field trial data that showed disulfoton residues of concern at less than 0.5 ppm, EPA determined that the tolerance on potatoes should be decreased from 0.75 to 0.5 ppm. Therefore, EPA is proposing to decrease the tolerance in 40 CFR 180.183 on potato to 0.5 ppm, the appropriate tolerance level for the interim period before it expires on January 30, 2010.

In the **Federal Register** of December 15, 2004 (69 FR 75061) (FRL–7689–8), EPA issued a notice which announced the receipt of requests from a registrant to voluntarily amend a specific registration for disulfoton, including deletion of the last peanut and pepper uses. EPA approved the amendments, including the peanut and pepper use deletions for disulfoton in an order issued on October 10, 2007 (72 FR 57571) (FRL–8151–8), and permitted the registrant and others to sell, distribute, and use product under the previously approved labeling until stocks are exhausted. The registrant and others have had more than 4 years since the voluntary amendment requests and more than 1 year since the amendment order to sell and distribute stocks and the Agency believes that end users will have had sufficient time to exhaust existing stocks and for disulfoton-treated peanut and pepper commodities to have cleared the channels of trade by January 30, 2010. Also, based on available data that showed combined disulfoton residues of concern below 0.1 ppm in or on nutmeat, the Agency determined that the tolerance should be decreased from 0.75 to 0.1 ppm. Therefore, EPA is proposing to revoke the tolerances in 40 CFR 180.183(a) on peanut and pepper; each with an expiration/revocation date of January 30, 2010, and decrease the tolerance on peanut to 0.1 ppm for the interim period before it expires.

There have been no active registrations in the United States for disulfoton use on peas since 2002. The Agency believes that end users have had sufficient time to exhaust existing stocks and for disulfoton-treated peas to have cleared the channels of trade. Therefore, EPA is proposing to revoke the tolerances in 40 CFR 180.183(a) on pea, dry, seed; pea, field, vines; and pea, succulent.

Based on available field trial data that showed combined disulfoton residues of

concern as high as 1.15 ppm on leaf lettuce, EPA determined that the existing tolerance for lettuce at 0.75 ppm should be revised and a separate tolerance for leaf lettuce should be increased from 0.75 to 2 ppm. Therefore, EPA is proposing to revise the tolerance on lettuce at 0.75 ppm in 40 CFR 180.183(a) and separate it into lettuce, head at 0.75 and lettuce, leaf at 2 ppm. The Agency determined that the increased tolerance is safe; i.e., there is a reasonable certainty that no harm will result from aggregate exposure to the pesticide chemical residue.

Based on available metabolism and cattle feeding data (3.6X) that showed combined disulfoton residues of concern in milk were as high as 0.012 ppm, EPA calculated residues at the 1X feeding level to be <0.01 ppm. Therefore, EPA determined that a tolerance should be established on milk at 0.01 ppm with an expiration/revocation date of January 30, 2010. Also, based on available metabolism and cattle feeding data (0.7X) that showed combined disulfoton residues of concern in or on meat and meat byproducts as high as <0.01 ppm in fat and muscle, and 0.03 ppm in kidney, EPA calculated that residues at the 1X feeding level are expected to be <0.05 ppm in meat byproducts. Therefore, EPA determined that tolerances on the fat, meat and meat byproducts of cattle, goats, hogs, horses, and sheep should be established at 0.05 ppm. Currently, there are label restrictions against the grazing of disulfoton-treated cotton fields and feeding of treated cotton forage to livestock and cotton forage is not considered by EPA to be a significant livestock feed item. While cotton gin byproducts may occasionally serve as a livestock feed, the Agency has determined that there is no reasonable expectation that disulfoton residues would transfer to livestock tissue. However, based on the feed crops of barley, peanut, and wheat that are proposed herein for tolerance revocation, each with an expiration/revocation date of January 30, 2010, the Agency determined that the livestock and milk tolerances should be established, each with an expiration/revocation date of January 30, 2010. Consequently, EPA is proposing to establish tolerances in 40 CFR 180.183(a) on cattle, fat; cattle, meat; cattle, meat byproducts; goat, fat; goat, meat; goat, meat byproducts; hog, fat; hog, meat; hog, meat byproducts; horse, fat; horse, meat; horse, meat byproducts; sheep, fat; sheep, meat; and sheep, meat byproducts, each at 0.05 ppm and with an expiration/revocation date of January 30, 2010, and on milk at 0.01 ppm with an expiration/revocation date of January 30, 2010.

There are Codex MRLs for combined residues of disulfoton, demeton-*S*, and their sulfoxides and sulfones on a number of commodities, including barley, barley straw, peanut, wheat, and wheat straw.

3. *Esfenvalerate*. Existing tolerances for fenvalerate are proposed herein to be converted to esfenvalerate tolerances for those crops with U.S. registrations for esfenvalerate. This is because fenvalerate uses are being phased out in the United States. Esfenvalerate and fenvalerate are considered chemically and toxicologically equivalent by EPA. Esfenvalerate is the S,S-isomer (the most insecticidally active isomer) enriched version of fenvalerate. Currently, esfenvalerate tolerances in 40 CFR 180.533(a) are established for residues of esfenvalerate, (*S*)-cyano(3-phenoxyphenyl)methyl-(*S*)-4-chloro-α-(1-methylethyl)benzeneacetate. The Agency had determined that residues of concern should include its non-racemic isomer, (*R*)-cyano(3-phenoxyphenyl)methyl-(*R*)-4-chloro-α-(1-methylethyl)benzeneacetate and its diastereomers (*S*)-cyano(3-phenoxyphenyl)methyl-(*R*)-4-chloro-α-(1-methylethyl)benzeneacetate and (*R*)-cyano(3-phenoxyphenyl)methyl-(*S*)-4-chloro-α-(1-methylethyl)benzeneacetate. In addition, the Agency determined that proposed and existing tolerances for residues of concern as a result of esfenvalerate use on food commodities should be recodified into 40 CFR 180.533(a)(1) and separated from the proposed tolerance on food commodities for residues of concern as a result of esfenvalerate use in food-handling establishments. Therefore, EPA is proposing to revise the introductory text containing the tolerance expression in 40 CFR 180.533(a) and recodify that section under 40 CFR 180.533(a)(1), as follows: ''Tolerances are established for the combined residues of the insecticide esfenvalerate, (*S*)-cyano(3-phenoxyphenyl)methyl-(*S*)-4-chloro-α-(1-methylethyl)benzeneacetate, its non-racemic isomer, (*R*)-cyano(3-phenoxyphenyl)methyl-(*R*)-4-chloro-α-(1-methylethyl)benzeneacetate and its diastereomers (*S*)-cyano(3-phenoxyphenyl)methyl-(*R*)-4-chloro-α-(1-methylethyl)benzeneacetate and (*R*)-cyano(3-phenoxyphenyl)methyl-(*S*)-4-chloro-α-(1-methylethyl)benzeneacetate, in or on food commodities as follows:.''

In order to cover current registrations for use of esfenvalerate in food-handling establishments, EPA is proposing to establish a tolerance of 0.05 ppm under newly recodified 40 CFR 180.533(a)(2) on raw agricultural food commodities (other than those food commodities already covered by a higher tolerance as a result of use on growing crops) for the combined residues of the insecticide esfenvalerate, (*S*)-cyano(3-phenoxyphenyl)methyl-(*S*)-4-chloro-α-(1-methylethyl)benzeneacetate, its non-racemic isomer, (*R*)-cyano(3-phenoxyphenyl)methyl-(*R*)-4-chloro-α-(1-methylethyl)benzeneacetate and its diastereomers (*S*)-cyano(3-phenoxyphenyl)methyl-(*R*)-4-chloro-α-(1-methylethyl)benzeneacetate and (*R*)-cyano(3-phenoxyphenyl)methyl-(*S*)-4-chloro-α-(1-methylethyl)benzeneacetate.

Based on available data that showed combined esfenvalerate residues of concern that were non-detectable (<0.01 ppm) in or on sugar beet roots, and in order to harmonize with the fenvalerate Codex MRL for root and tuber vegetables, EPA determined that the tolerance should be decreased from 0.5 to 0.05 ppm. Therefore, EPA is proposing to decrease the tolerance in newly recodified 40 CFR 180.533(a)(1) on beet, sugar, roots to 0.05 ppm. In addition, based on available processing data that showed an average concentration factor of 4.5X for dried sugar beet pulp and the highest average field trial (HAFT) for sugar beet roots (<0.01 ppm), EPA determined that the expected combined esfenvalerate residues of concern in dried sugar beet pulp are <0.045 ppm. Because the proposed tolerance for the raw agricultural commodity (sugar beet root) at 0.05 ppm should sufficiently cover expected combined esfenvalerate residues of concern in or on sugar beet pulp resulting from registered use, the Agency determined that the existing tolerance on dried sugar beet pulp is no longer needed and should be revoked. Therefore, the Agency is proposing to revoke the tolerance in newly recodified 40 CFR 180.533(a)(1) on beet, sugar, dried pulp.

Because the existing tolerances for kohlrabi and head lettuce support regional registrations in Texas and Arizona, California, Colorado, Florida, New Mexico, and Texas, respectively, EPA determined that these tolerances are no longer general tolerances and should be redesignated as regional registrations. Therefore, the Agency is proposing to recodify tolerances on kohlrabi at 2.0 ppm and lettuce, head at 5.0 ppm from 40 CFR 180.533(a) into 40 CFR 180.533(c) for regional tolerances. Also, because that section is currently reserved, EPA is proposing introductory text as follows: ''Tolerances with regional registration are established for the combined residues of the insecticide

esfenvalerate, (*S*)-cyano(3-phenoxyphenyl)methyl-(*S*)-4-chloro-α-(1-methylethyl)benzeneacetate, its non-racemic isomer, (*R*)-cyano(3-phenoxyphenyl)methyl-(*R*)-4-chloro-α-(1-methylethyl)benzeneacetate and its diastereomers (*S*)-cyano(3-phenoxyphenyl)methyl-(*R*)-4-chloro-α-(1-methylethyl)benzeneacetate and (*R*)-cyano(3-phenoxyphenyl)methyl-(*S*)-4-chloro-α-(1-methylethyl)benzeneacetate, in or on food commodities as follows:.''

Currently, many crop commodities registered for esfenvalerate, the S,S-isomer of fenvalerate, have been covered by tolerances in 40 CFR 180.379 for fenvalerate, a racemic mixture of four stereoisomers (the S,S; R,S; S,R; and R,R isomers). However, as described earlier in this document, EPA is proposing to revoke fenvalerate tolerances. Therefore, EPA is proposing to establish separate tolerances for esfenvalerate in 40 CFR 180.533 as described below.

Based on the available bridging data from fenvalerate that compared residues of fenvalerate with esfenvalerate for certain crop commodities and using a tiered approach of residue conversion, EPA determined that fenvalerate tolerances less than 1.0 ppm should be established for esfenvalerate at levels that remain unchanged due to the increased variability in analytical data as the limit of quantitation is approached. Therefore, the Agency is proposing to establish tolerances in newly recodified 40 CFR 180.533(a)(1) for combined esfenvalerate residues of concern on almond at 0.2 ppm; bean, dry, seed at 0.25 ppm; carrot, roots at 0.5 ppm; cauliflower at 0.5 ppm; corn, field, grain at 0.02 ppm; corn, pop, grain at 0.02 ppm; corn, sweet, kernel plus cob with husks removed at 0.1 ppm; cotton, undelinted seed at 0.2 ppm; cucumber at 0.5 ppm; hazelnut at 0.2 ppm; lentil, seed at 0.25 ppm; pea, dry, seed at 0.25 ppm; peanut at 0.02 ppm; pecan at 0.2 ppm; potato at 0.02 ppm; radish, roots at 0.3 ppm; soybean, seed at 0.05 ppm; squash, summer at 0.5 ppm; turnip, roots at 0.5 ppm; and walnut at 0.2 ppm.

Based on the available bridging data from fenvalerate that compared residues of fenvalerate with esfenvalerate for certain crop commodities and using a tiered approach of residue conversion, EPA determined that fenvalerate tolerances that range from 1.0 to 2.0 ppm should be established for esfenvalerate at levels divided by 2. Therefore, the Agency is proposing to establish tolerances in newly recodified 40 CFR 180.533(a)(1) for combined esfenvalerate residues of concern on apple at 1.0 ppm; bean, snap, succulent at 1.0 ppm; broccoli at 1.0 ppm; cantaloupe at 0.5 ppm; eggplant at 0.5 ppm; melon, honeydew at 0.5 ppm; muskmelon at 0.5 ppm; pea, succulent at 0.5 ppm; pear at 1.0 ppm; pepper at 0.5 ppm; pumpkin at 0.5 ppm; squash, winter at 0.5 ppm; sugarcane, cane at 1.0 ppm; sunflower, seed at 0.5 ppm; tomato at 0.5 ppm; and watermelon at 0.5 ppm.

Based on the available bridging data from fenvalerate that compared residues of fenvalerate with esfenvalerate for certain crop commodities and using a tiered approach of residue conversion, EPA determined that fenvalerate tolerances greater than 2.0 ppm should be established for esfenvalerate at levels divided by 3 and rounded to the nearest whole number. Therefore, the Agency is proposing to establish tolerances in newly recodified 40 CFR 180.533(a)(1) for combined esfenvalerate residues of concern on almond, hulls at 5.0 ppm; blueberry at 1.0 ppm; cabbage, except chinese cabbage at 3.0 ppm; caneberry subgroup 13A at 1.0 ppm; collards at 3.0 ppm; elderberry at 1.0 ppm; fruit, stone, group 12 at 3.0 ppm; gooseberry at 1.0 ppm; radish, tops at 3.0 ppm; and turnip, tops at 7.0 ppm.

Based on the available bridging data from fenvalerate that compared residues of fenvalerate with esfenvalerate for corn and using a tiered approach of residue conversion, the Agency determined that tolerances should be established for combined esfenvalerate residues of concern on the forage of field and sweet corn and the stover of field, pop, and sweet corn, each at 15.0 ppm. Therefore, the Agency is proposing to establish tolerances in newly recodified 40 CFR 180.533(a)(1) for combined esfenvalerate residues of concern on corn, field, forage at 15.0 ppm; corn, field, stover at 15.0 ppm; corn, pop, stover at 15.0 ppm; corn, sweet, forage at 15.0 ppm; and corn, sweet, stover at 15.0 ppm.

In order to cover potential secondary residues in or on milk and ruminant tissues which could result from registered uses of esfenvalerate on many livestock feed items and livestock premises, and because the ruminant metabolism of esfenvalerate is similar to fenvalerate, EPA determined that animal commodity tolerances for esfenvalerate should be established at levels which match the existing tolerances for fenvalerate. Therefore, the Agency is proposing to establish tolerances in 40 CFR 180.533(a)(1) on cattle, fat; cattle, meat; cattle, meat byproducts; goat, fat; goat, meat; goat, meat byproducts; hog, fat; hog, meat; hog, meat byproducts; horse, fat; horse, meat; horse, meat byproducts; sheep, fat; sheep, meat; and sheep, meat byproducts; each at 1.5 ppm; in milk at 0.3 ppm; and in milk, fat at 7.0 ppm.

Based on a petition with data submitted by the Interregional Research Project No. 4 (IR-4) in support of the use of esfenvalerate on sweet potatoes that showed residues of concern at <0.05 ppm, EPA determined that a tolerance should be established at 0.05 ppm. Therefore, the Agency is proposing to establish a tolerance in 40 CFR 180.533(a)(1) on sweet potato, roots at 0.05 ppm.

Also, based on a petition with data submitted by IR-4 in support of a regional registration (east of the Mississippi River only) for use of esfenvalerate on bok choy that showed residues of concern at <1.0 ppm, EPA determined that a regional tolerance should be established at 1.0 ppm. Therefore, the Agency is proposing to establish a regional tolerance in 40 CFR 180.533(c) on cabbage, chinese, bok choy at 1.0 ppm.

In addition, based on a petition with data submitted by IR-4 regarding bulk food storage areas and in support of postharvest uses of esfenvalerate on stored almonds, cacao beans, peanuts, and walnuts that showed residues of concern as high as 43.48 ppm, 0.79 ppm, 0.11 ppm and 13.05 ppm, respectively, on samples collected from exposed surface sections of sacks (samples from interior sections of sacks were mostly non-detectable; i.e., <0.1 ppm), EPA determined that postharvest tolerances should be established on almond, postharvest at 50 ppm; cacao bean, postharvest at 1.0 ppm; peanut, postharvest at 0.20 ppm; and walnut, postharvest at 15 ppm. However, the petitioner needs to submit a revised Section B to limit number of consecutive daily spray applications to 270 days and specify a retreatment interval of 3-4 days when the proposed formulation is used for space treatments of food-handling establishments other than on stored almonds, cacao beans, peanuts, and walnuts. Therefore, the Agency is not taking action to establish such postharvest tolerances at this time.

Moreover, based on a petition with data submitted by IR-4 in support of a regional registration (for use of esfenvalerate on Brussels sprouts grown in all states except California) that showed esfenvalerate residues of concern as high as 0.141 ppm, EPA determined that a postharvest tolerance should be established at 0.20 ppm. Provided that the use of esfenvalerate on Brussels sprouts is limited to the EPA-defined growing regions represented by Arkansas (Region 4) and North Carolina (Region 2), no additional field trials are required. However, the petitioner did

not specify the minimum spray volumes for ground versus aerial equipment applications, and this information is required since the amount of spray volumes as well as equipment types can affect the magnitude of residues. Therefore, the Agency is not taking action to establish such a tolerance for Brussels sprouts at this time.

There are Codex MRLs for residues of esfenvalerate on eggs; poultry meat; and poultry, edible offal.

4. *Ethylene oxide.* Because there are no active registrations for use of ethylene oxide on coconut, EPA determined that the tolerance on coconut, copra is no longer needed and should be revoked. Consequently, the Agency is proposing to revoke the tolerance in 40 CFR 180.151(a) on coconut, copra.

EPA has determined that the tolerance on processed spices at 50 ppm in 40 CFR 180.151(a)(2) should be reassigned with the tolerance on whole spices at 50 ppm in 40 CFR 180.151(a)(1), as one tolerance termed herbs and spices, group 19, dried (except basil), and should be lowered to 7 ppm based on a reevaluation of a single chamber process that showed much lower residue levels. Therefore, the Agency is proposing to revoke the tolerances on processed (ground) spices in 40 CFR 180.151(a)(2) and the tolerance on spices, whole in 40 CFR 180.151(a)(1), and establish a tolerance in 40 CFR 180.151(a)(1) on herb and spice, group 19, dried, except basil at 7 ppm.

Based on data for spices/herbs and single chamber treatment process, EPA determined that a tolerance should be established on dried vegetables at 7 ppm, provided that label amendments are made as described above. Therefore, the Agency is proposing to establish a tolerance in 40 CFR 180.151(a)(1) for residues of ethylene oxide in or on vegetable, dried at 7 ppm.

Currently in 40 CFR 180.151(a)(2), there are prescribed conditions of use for ethylene oxide. The Agency believes that these current sections in 40 CFR 180.151(a)(2) should be removed because all treatment parameters should be on the label. Ethylene chlorohydrin is a reaction product that results from the fumigation of foods with ethylene oxide due to interaction of the ethylene oxide with natural chlorides present in the crop. Based on spice sterilization data and a refined probabilistic acute dietary assessment for all supported ethylene oxide food uses, the Agency concluded that ethylene chlorohydrin is a residue of concern and should have tolerances. Therefore, EPA is proposing to remove existing paragraph (a)(2) and establish a tolerance expression in newly revised 40 CFR 180.151(a)(2) as follows: ''Tolerances are established for residues of the ethylene oxide reaction product, 2-chloroethanol, commonly referred to as ethylene chlorohydrin, when ethylene oxide is used as a postharvest fumigant in or on food commodities as follows:.''

Also, EPA is proposing to establish tolerances in 40 CFR 180.151(a)(2) for ethylene chlorohydrin on herb and spice, group 19, dried, except basil at 940 ppm and vegetable, dried at 940 ppm.

In addition, EPA is proposing to revise commodity terminology to conform to current Agency practice as follows: in 40 CFR 180.151(a)(1), ''walnut, black'' to ''walnut.''

There are no Codex MRLs for residues of ethylene oxide or ethylene chlorohydrin in or on spices/herbs. A Canadian MRL exists for ethylene chlorohydrin on spices at 1,500 ppm. There is no Canadian MRL for ethylene oxide on spices/herbs. However, because the U.S. residue data showed slightly lower levels of ethylene chlorohydrin, the Agency is proposing a 940 ppm tolerance.

5. *Fenvalerate.* Fenvalerate is a racemic mixture of four stereoisomers (the S,S; R,S; S,R; and R,R isomers). On August 5, 2004 (69 FR 47437) (FRL–7369–5), EPA issued a cancellation order for all technical registrations for fenvalerate that permitted one technical registrant to sell and distribute existing stocks until March 27, 2004 and the other technical registrant to sell and distribute existing stocks until April 1, 2004. Since then, in the **Federal Register** of April 30, 2008 (73 FR 23457) (FRL–8363–5), EPA issued a notice regarding EPA's announcement of the receipt of requests from end-use registrants to voluntarily cancel certain registrations for fenvalerate, cyano(3-phenoxyphenyl)methyl-4-chloro-α-(1-methylethyl)benzeneacetate, which would terminate the last fenvalerate products registered for use in the United States. EPA approved the cancellations effective on July 9, 2008, and permitted the registrants to sell and distribute product under the previously approved labeling for a period of 1 year from the date of the cancellation request (which ranged from August 29, 2007 through April 2, 2008), i.e., until April 2, 2009 for the last end-use registrations. These last registrations were for uses associated with agricultural, pet care, domestic home and garden, and commercial/industrial/food sites and non-food/mosquito abatement. The Agency believes that end users will have had sufficient time to exhaust existing stocks and for the fenvalerate-treated food commodities to have cleared the channels of trade by April 2, 2010. Therefore, EPA is proposing to revoke the tolerances in 40 CFR 180.379(a)(1) on almond, hulls; almond; apple; artichoke, globe; bean, dry, seed; bean, snap, succulent; broccoli; blueberry; cabbage; caneberry subgroup 13A; cantaloupe; carrot, roots; cattle, fat; cattle, meat byproducts; cattle, meat; cauliflower; collards; corn, grain; corn, forage; corn, stover; corn, sweet, kernel plus cob with husks removed; cotton, undelinted seed; cucumber; currant; eggplant; elderberry; fruit, stone; goat, fat; goat, meat byproducts; goat, meat; gooseberry; hazelnut; hog, fat; hog meat byproducts; hog, meat; horse, fat; horse, meat byproducts; horse, meat; huckleberry; melon, honeydew; milk; milk, fat; muskmelon; peanut; pear; pea; pea, dry, seed; pecan; pepper; potato; pumpkin; radish, roots; radish, tops; sheep, fat; sheep, meat byproducts; sheep, meat; soybean; squash, summer; squash, winter; sugarcane, cane; sunflower, seed; tomato; turnip, greens; turnip, roots; walnut; and watermelon; each with an expiration/revocation date of April 2, 2010. Also, EPA is proposing to revoke the tolerance in 40 CFR 180.379(a)(3) on soybean, hulls and the regional tolerance in 40 CFR 180.379(c) on okra. In addition, EPA is proposing to revoke a tolerance on raw agricultural food commodities (other than those food commodities already covered by a higher tolerance as a result of use on growing crops) at 0.05 ppm in 40 CFR 180.379(a)(2) for residues of fenvalerate and esfenvalerate as a result of use in food-handling establishments. A separate tolerance for use of esfenvalerate in food-handling establishments is proposed by the Agency to be established in 40 CFR 180.533(a)(2) as described earlier in this document.

Due to the proposed tolerance revocations herein, EPA is proposing to revise the section heading in 40 CFR 180.379 from cyano(3-phenoxyphenyl)methyl-4-chloro-α-(1-methylethyl)benzeneacetate to that of fenvalerate, remove the table in paragraph (c) and reserve paragraph (c), remove paragraphs (a)(2) and (a)(3), revise paragraph (a)(1) into (a) and the introductory text containing the tolerance expression in newly recodified 40 CFR 180.379(a) to read as follows: ''Tolerances are established for residues of the insecticide fenvalerate, cyano(3-phenoxyphenyl)methyl-4-chloro-α-(1-methylethyl)benzeneacetate, in or on food commodities as follows.''

Also, EPA is proposing to revise commodity terminology to conform to current Agency practice in 40 CFR

180.379(a) from ''corn, forage'' to ''corn, field, forage'' and ''corn, sweet, forage;'' ''corn, grain'' to ''corn, field, grain'' and ''corn, pop, grain;'' ''corn, stover'' to ''corn, field, stover,'' ''corn, pop, stover,'' and ''corn, sweet, stover;'' ''fruit, stone'' to ''fruit, stone, group 12;'' ''soybean'' to ''soybean, seed;'' and ''turnip, greens'' to ''turnip, tops.''

Currently, there are existing Codex MRLs for fenvalerate residues on beans, shelled at 0.1 mg/kg; beans, except broad bean and soya bean at 1 mg/kg; berries and other small fruits at 1 mg/kg; broccoli at 2 mg/kg; cabbages, head at 3 mg/kg; cauliflower at 2 mg/kg; cereal grains at 2 mg/kg; cherries at 2 mg/kg; cottonseed at 0.2 mg/kg; cucumber at 0.2 mg/kg; edible offal (mammalian) at 0.02 mg/kg; fat of meat (from mammals other than marine mammals) at 1 mg/kg; melons, except watermelon at 0.2 mg/kg; milks at 0.1 mg/kg; peach at 5 mg/kg; peanut, whole at 0.1 mg/kg; peas, shelled (succulent seeds) at 0.1 mg/kg; peppers, chili (dry) at 5 mg/kg; peppers, sweet at 0.5 mg/kg; pome fruits at 2 mg/kg; root and tuber vegetables at 0.05 mg/kg; soya bean (dry) at 0.1 mg/kg; squash, summer at 0.5 mg/kg; sunflower seed at 0.1 mg/kg; sweet corn (corn-on-the-cob) at 0.1 mg/kg; tomato at 1 mg/kg; watermelon at 0.5 mg/kg; tree nuts at 0.2 mg/kg; and winter squash at 0.5 mg/kg.

6. *1-Naphthaleneacetic acid*. Currently, tolerances in 40 CFR 180.155(a) are established for residues of 1-naphthaleneacetic acid, in 40 CFR 180.155(b) for residues of the ethyl ester of 1-naphthaleneacetic acid, and in 40 CFR 180.309 for combined residues of α-naphthaleneacetamide and its metabolite α-naphthaleneacetic acid (calculated as α-naphthaleneacetic acid). However, the Agency has determined the residues of concern are 1-naphthaleneacetic acid and its conjugates and therefore that the introductory text in 40 CFR 180.155(a) should be revised for residues of 1-naphthaleneacetic acid and its conjugates calculated as 1-naphthaleneacetic acid that result from application of the acid, its ammonium, sodium, or potassium salts, ethyl ester, or acetamide. Therefore, while tolerances on apple, pear, and olive should be proposed at reassessed levels in 40 CFR 180.155(a), separate tolerances on apple, pear, and olive in 40 CFR 180.155(b) and on apple and pear in 40 CFR 180.309 are no longer needed and should be revoked. Consequently, EPA is proposing to revoke the tolerances on apple, pear, and olive in 40 CFR 180.155(b) and revise and reserve that paragraph for tolerances with section 18 emergency exemptions. Also, EPA is proposing to revoke the tolerances on apple and pear in 40 CFR 180.309, and remove that section. In addition, EPA is proposing to revise the introductory text in 40 CFR 180.155(a) as follows: ''Tolerances are established for the combined residues of the plant growth regulator 1-naphthaleneacetic acid and its conjugates calculated as 1-naphthaleneacetic acid from the application of 1-naphthaleneacetic acid, its ammonium, sodium, or potassium salts, ethyl ester, and acetamide in or on food commodities as follows:.''

Because tolerances for residues of 1-naphthaleneacetic acid by application of its various forms will be combined into one introductory text in 40 CFR 180.155(a), 40 CFR 180.3(d)(7), which states that the total amount of residues for α-naphthaleneacetamide and/or α-naphthaleneacetic acid on the same raw agricultural commodity shall not exceed more residue than that permitted by the higher of the two tolerances, is no longer needed and therefore 40 CFR 180.3(d)(7) should be removed. Consequently, EPA is proposing to remove the current 40 CFR 180.3(d)(7) and redesignate current 40 CFR 180.3(d)(8) through (d)(13) as 40 CFR 180.3(d)(7) through (d)(12), respectively.

Based on available field trial data that showed combined naphthaleneacetic acid residues of concern in or on apples and pears as high as 0.06 ppm and 0.03 ppm, respectively, EPA determined that the tolerances on apple, pear, and quince in 40 CFR 180.155(a) should be decreased from 1 to 0.1 ppm and revised into a crop group tolerance entitled fruit, pome, group 11. Therefore, EPA is proposing to decrease the tolerances on apple, pear, and quince in 40 CFR 180.155(a) to 0.1 ppm and revise them into fruit, pome, group 11.

Based on available field trial data that showed combinednaphthaleneacetic acid residues of concern in or on olives as high as 0.61 ppm, EPA determined that the tolerances on olive in 40 CFR 180.155(a) should be increased from 0.1 to 0.7 ppm. Therefore, EPA is proposing to increase the tolerance on olive in 40 CFR 180.155(a) to 0.7 ppm. The Agency determined that the increased tolerance is safe; i.e., there is a reasonable certainty that no harm will result from aggregate exposure to the pesticide chemical residue. Also, EPA is proposing to remove the ''(N)'' designation from the tolerance on olive in 40 CFR 180.155(a) to conform to current Agency administrative practice, where the ''(N)'' designation means negligible residue.

Also, in accordance with current Agency practice, EPA is proposing to revise 40 CFR 180.155 by adding separate paragraphs (c), and (d), and reserving those sections for tolerances with regional registrations and indirect or inadvertent residues, respectively.

In addition, EPA is proposing to revise commodity terminology to conform to current Agency practice in 40 CFR 180.155(a) from ''orange, sweet'' to ''orange.'' Also, in order to reflect that there are no U.S. registrations, but only support for importation, EPA is proposing to footnote the pineapple tolerance and revise it from ''pineapple (from the application of the sodium salt to the growing crop)'' to ''pineapple.''

There are no Codex MRLs for residues of 1-naphthaleneacetic acid, its salts, ester, and acetamide.

7. *Phosalone*. In the **Federal Register** of October 26, 1998 (63 FR 57062) (FRL–6035–8), EPA responded to a comment from Rhone-Poulenc Ag Company, which requested that the Agency not revoke tolerances for phosalone on almonds; apricots; apples; cherries; grapes; peaches; pears; and plums/prunes in order to maintain them for importation purposes, by not revoking those tolerances at that time. Later, after a merger, Rhone-Poulenc Ag Company became Aventis CropScience, and was eventually acquired by Bayer CropScience, which later entered into an agreement that transferred the global rights of phosalone to Cheminova. On April 30, 2008, Cheminova notified EPA that for commercial reasons it will not develop the requested data to support the phosalone import tolerances. However, Cheminova urged the Agency to prevent trade irritants and consider that Canada is phasing out the use of phosalone. Health Canada's Pest Management Regulatory Agency (PMRA) has scheduled a last date of application for phosalone on apple; cherry; grape; peach; pear; and plum/prune as September 30, 2012, with the earliest date for amending (revoking) its MRLs as September 30, 2013. This information is found on PMRA's website at *http://www.pmra-arla.gc.ca/english/pdf/rev/rev2008-02-e.pdf*. Therefore, EPA is proposing to revoke the tolerances in 40 CFR 180.263 on apple; cherry; grape; peach; pear; and plum, prune, fresh; each with an expiration date of September 30, 2013. In addition, EPA is proposing to revoke the tolerances in 40 CFR 180.263 on almond and apricot effective on the day of publication of the final rule in the **Federal Register**.

In accordance with current Agency practice, EPA is proposing to revise 40 CFR 180.263 by adding separate paragraphs (b), (c), and (d), and reserving those sections for tolerances

with section 18 emergency exemptions, regional registrations, and indirect or inadvertent residues, respectively.

There are Codex MRLs for residues of phosalone on almonds, pome fruits, and stone fruits.

8. *Phosmet, N-(Mercaptomethyl)phthalimide S-(O,O-dimethyl phosphorodithioate)*. Based on metabolism and cattle feeding data (0.2X (MTDB) that showed combined phosmet residues of concern in milk below the limit of quantitation (LOQ) of 0.05 ppm, EPA determined that a tolerance should be established on milk for phosmet residues of concern at the combined LOQ level of 0.1 ppm. Therefore, EPA is proposing to establish a tolerance on milk in 40 CFR 180.261(a) at 0.1 ppm.

Based on available metabolism and cattle feeding data (1.1X MTDB) that showed combined phosmet residues of concern in or on meat and meat byproducts below the LOQ of 0.05 ppm, EPA determined that the tolerances on meat and meat byproducts of cattle, goats, horses, and sheep should be set at the combined LOQ of 0.1 ppm, and therefore decreased from 0.2 to 0.1 ppm. Consequently, EPA is proposing to decrease tolerances in 40 CFR 180.261(a) on cattle, meat; goat, meat; horse, meat; sheep, meat; cattle, meat byproducts; goat, meat byproducts; horse, meat byproducts; and sheep, meat byproducts, each to 0.1 ppm.

Based on a slightly exaggerated dermal application, EPA determined that combined phosmet residues of concern in or on cattle fat were below the combined LOQ and in order to reflect both secondary residues from feed and direct dermal application, the Agency determined that overall combined residues in or on cattle fat are expected to be <0.2 ppm. However, phosmet is not registered for dermal application to goats, horses, and sheep, and the fat tolerances on goats, horses and sheep should be based on the cattle feeding data alone and set at a combined LOQ of 0.1 ppm, and therefore decreased from 0.2 to 0.1 ppm. Consequently, EPA is proposing to decrease the tolerances in 40 CFR 180.261(a) on goat, fat; horse, fat; and sheep, fat to 0.1 ppm.

Based on swine dermal treatment data that showed combined phosmet residues of concern in or on liver, kidney, and muscle from animals at the 1–day pre-slaughter interval, each below the combined LOQ of 0.04 ppm, EPA determined that the tolerances on meat and meat byproducts of hogs should be decreased from 0.2 to 0.04 ppm. Consequently, EPA is proposing to decrease tolerances in 40 CFR 180.261(a) on hog, meat; and hog, meat byproducts, each to 0.04 ppm.

Based on available storage stability data that showed no significant decline in residues after 343 days of freezer storage and field trial data that showed combined phosmet residues of concern in or on washed sweet potatoes as high as 11.2 ppm following postharvest treatment and 40–day storage, EPA determined that the tolerance on sweet potatoes should be increased from 10 to 12 ppm. Therefore, EPA is proposing to increase the tolerance in 40 CFR 180.261(a) on sweet potato, roots to 12 ppm. The Agency determined that the increased tolerance is safe; i.e., there is a reasonable certainty that no harm will result from aggregate exposure to the pesticide chemical residue.

Based on available field trial data that showed combined phosmet residues of concern in or on succulent pea pods, and dry pea hay as high as 0.56 ppm and 17.3 ppm, respectively, EPA determined that the tolerance on field pea hay should be increased from 10 to 20 ppm, and the pea tolerance at 0.5 ppm should be revised and divided into pea, dry, seed at 0.5 ppm and pea, succulent, which should be increased from 0.5 to 1 ppm. Therefore, EPA is proposing in 40 CFR 180.261(a) to increase the tolerance on pea, field, hay to 20 ppm and revise pea into pea, dry, seed at 0.5 ppm and pea, succulent at 1 ppm. The Agency determined that the increased tolerances are safe; i.e., there is a reasonable certainty that no harm will result from aggregate exposure to the pesticide chemical residue.

Based on available field trial data that showed combined phosmet residues of concern below 20 ppm on alfalfa forage, EPA determined that the tolerance on alfalfa at 40 ppm should be revised and divided into alfalfa, hay at 40 ppm and alfalfa, forage, which should be decreased from 40 to 20 ppm. Therefore, EPA is proposing to revise the tolerance in 40 CFR 180.261(a) on alfalfa into alfalfa, hay at 40 ppm and alfalfa, forage at 20 ppm.

Based on available processing data for cotton that showed phosmet residues of concern concentrated in cottonseed oil at 2X the treatment of cotton, EPA determined that a tolerance of 0.2 ppm should be established based on the existing tolerance of 0.1 ppm for cotton, undelinted seed. Therefore, EPA is proposing to establish a tolerance in 40 CFR 180.261(a) on cotton, refined oil at 0.2 ppm.

Also, EPA is proposing to revise commodity terminology to conform to current Agency practice in 40 CFR 180.261(a) from ''fruit, citrus'' to ''fruit, citrus, group 10'' and ''nut'' to ''nut, tree, group 14.'' Moreover, in 40 CFR 180.261, EPA is proposing to remove the ''(N)'' designation from all entries to conform to current Agency administrative practice, where the ''(N)'' designation means negligible residues.

There is compatibility between U.S. tolerances and Codex MRLs for residues of phosmet on apple at 10 mg/kg; apricot at 5 mg/kg; blueberries at 10 mg/kg; citrus fruits at 5 mg/kg; grapes at 10 mg/kg; nectarine at 5 mg/kg; peach at 10 mg/kg; pear at 10 mg/kg. In addition, there are Codex MRLs for residues of phosmet on tree nuts at 0.2 mg/kg and potato at 0.05 mg/kg.

9. *Primisulfuron-methyl*. There have been no active registrations for use of primisulfuron-methyl on sweet corn for more than 10 years. Also, for at least 10 years, active registrations for primisulfuron-methyl have shown a label prohibition of its use on sweet corn. Therefore, there is no longer a need for the sweet corn tolerance. Consequently, EPA is proposing to revoke the tolerance in 40 CFR 180.452 on corn, sweet, kernel plus cob with husks removed.

There are no Codex MRLs for residues of primisulfuron-methyl.

10. *Prothioconazole*. Prothioconazole is a fungicide first registered for use in the United States in 2007. Therefore, it did not need to be reviewed under the reregistration or tolerance reassessment programs. However, current active registrations for the use of prothioconazole on peanuts have a label restriction against the feeding of peanut hay or threshings to livestock or grazing of livestock in treated areas. Based on these restrictions, the Agency has determined that the tolerance on peanut hay is no longer needed, and therefore should be revoked. Consequently, EPA is proposing to revoke the tolerance in 40 CFR 180.626(a)(1) on peanut, hay.

There are no Codex MRLs for residues of prothioconazole.

11. *Thiabendazole*. In the **Federal Register** of December 28, 2007 (72 FR 73809) (FRL–8345–5), EPA issued a notice regarding EPA's announcement of the receipt of requests from registrants to voluntarily amend certain registrations for several active ingredients, including deletion of the last sugar beet uses from thiabendazole registrations. EPA approved the sugar beet use deletions for thiabendazole and made the last one effective on June 25, 2008, and permitted the registrants to sell and distribute product under the previously approved labeling for a period of 18 months after approval of the revision; i.e., until December 25, 2009. The Agency believes that end users will have had sufficient time to

exhaust existing stocks and for thiabendazole-treated sugar beet commodities to have cleared the channels of trade by December 25, 2010. Therefore, EPA is proposing to revoke the tolerances in 40 CFR 180.242(a)(1) on beet, sugar, dried pulp; beet, sugar, roots; and beet, sugar, tops; each with an expiration/revocation date of December 25, 2010.

There are no Codex MRLs for residues of thiabendazole on sugar beets.

B. What is the Agency's Authority for Taking this Action?

A ''tolerance'' represents the maximum level for residues of pesticide chemicals legally allowed in or on raw agricultural commodities and processed foods. Section 408 of FFDCA, 21 U.S.C. 346a, as amended by FQPA of 1996, Public Law 104–170, authorizes the establishment of tolerances, exemptions from tolerance requirements, modifications in tolerances, and revocation of tolerances for residues of pesticide chemicals in or on raw agricultural commodities and processed foods. Without a tolerance or exemption, food containing pesticide residues is considered to be unsafe and therefore ''adulterated'' under section 402(a) of FFDCA, 21 U.S.C. 342(a). Such food may not be distributed in interstate commerce (21 U.S.C. 331(a)). For a food-use pesticide to be sold and distributed, the pesticide must not only have appropriate tolerances under the FFDCA, but also must be registered under FIFRA (7 U.S.C. 136 *et seq.*). Food-use pesticides not registered in the United States must have tolerances in order for commodities treated with those pesticides to be imported into the United States.

EPA is proposing these tolerance actions to implement the tolerance recommendations made during the reregistration and tolerance reassessment processes (including follow-up on canceled or additional uses of pesticides). As part of these processes, EPA is required to determine whether each of the amended tolerances meets the safety standard of FQPA. The safety finding determination is discussed in detail in each post-FQPA RED and TRED for the active ingredient. REDs and TREDs recommend the implementation of certain tolerance actions, including modifications to reflect current use patterns, to meet safety findings, and change commodity names and groupings in accordance with new EPA policy. Printed and electronic copies of the REDs and TREDs are available as provided in Unit II.A.

EPA has issued REDs for azinphos-methyl, disulfoton, 1-naphthaleneacetic acid, phosmet, and thiabendazole, and TREDs for ethylene oxide and primisulfuron methyl. REDs and TREDs contain the Agency's evaluation of the database for these pesticides, including requirements for additional data on the active ingredients to confirm the potential human health and environmental risk assessments associated with current product uses, and in REDs state conditions under which these uses and products will be eligible for reregistration. The REDs and TREDs recommended the establishment, modification, and/or revocation of specific tolerances. RED and TRED recommendations such as establishing or modifying tolerances, and in some cases revoking tolerances, are the result of assessment under the FFDCA standard of ''reasonable certainty of no harm.'' However, tolerance revocations recommended in REDs and TREDs that are proposed in this document do not need such assessment when the tolerances are no longer necessary.

EPA's general practice is to propose revocation of tolerances for residues of pesticide active ingredients on crops for which FIFRA registrations no longer exist and on which the pesticide may therefore no longer be used in the United States. EPA has historically been concerned that retention of tolerances that are not necessary to cover residues in or on legally treated foods may encourage misuse of pesticides within the United States. Nonetheless, EPA will establish and maintain tolerances even when corresponding domestic uses are canceled if the tolerances, which EPA refers to as ''import tolerances,'' are necessary to allow importation into the United States of food containing such pesticide residues. However, where there are no imported commodities that require these import tolerances, the Agency believes it is appropriate to revoke tolerances for unregistered pesticides in order to prevent potential misuse.

Furthermore, as a general matter, the Agency believes that retention of import tolerances not needed to cover any imported food may result in unnecessary restriction on trade of pesticides and foods. Under section 408 of FFDCA, a tolerance may only be established or maintained if EPA determines that the tolerance is safe based on a number of factors, including an assessment of the aggregate exposure to the pesticide and an assessment of the cumulative effects of such pesticide and other substances that have a common mechanism of toxicity. In doing so, EPA must consider potential contributions to such exposure from all tolerances. If the cumulative risk is such that the tolerances in aggregate are not safe, then every one of these tolerances is potentially vulnerable to revocation. Furthermore, if unneeded tolerances are included in the aggregate and cumulative risk assessments, the estimated exposure to the pesticide would be inflated. Consequently, it may be more difficult for others to obtain needed tolerances or to register needed new uses. To avoid potential trade restrictions, the Agency is proposing to revoke tolerances for residues on crops uses for which FIFRA registrations no longer exist, unless someone expresses a need for such tolerances. Through this proposed rule, the Agency is inviting individuals who need these import tolerances to identify themselves and the tolerances that are needed to cover imported commodities.

Parties interested in retention of the tolerances should be aware that additional data may be needed to support retention. These parties should be aware that, under FFDCA section 408(f), if the Agency determines that additional information is reasonably required to support the continuation of a tolerance, EPA may require that parties interested in maintaining the tolerances provide the necessary information. If the requisite information is not submitted, EPA may issue an order revoking the tolerance at issue.

When EPA establishes tolerances for pesticide residues in or on raw agricultural commodities, consideration must be given to the possible residues of those chemicals in meat, milk, poultry, and/or eggs produced by animals that are fed agricultural products (for example, grain or hay) containing pesticides residues (40 CFR 180.6). When considering this possibility, EPA can conclude that:

1. Finite residues will exist in meat, milk, poultry, and/or eggs.

2. There is a reasonable expectation that finite residues will exist.

3. There is a reasonable expectation that finite residues will not exist. If there is no reasonable expectation of finite pesticide residues in or on meat, milk, poultry, or eggs, tolerances do not need to be established for these commodities (40 CFR 180.6(b) and (c)).

EPA has evaluated certain specific meat, milk, poultry, and egg tolerances proposed for revocation in this document and has concluded that there is no reasonable expectation of finite pesticide residues of concern in or on those commodities.

C. When Do These Actions Become Effective?

With the exception of certain tolerances for azinphos-methyl, disulfoton, fenvalerate, phosalone, and thiabendazole for which EPA is proposing specific expiration/revocation dates, the Agency is proposing that these revocations, modifications, establishments of tolerances, and revisions of tolerance nomenclature become effective on the date of publication of the final rule in the **Federal Register.** With the exception of the proposed revocation of specific tolerances for azinphos-methyl, disulfoton, fenvalerate, phosalone, and thiabendazole, the Agency believes that existing stocks of pesticide products labeled for the uses associated with the tolerances proposed for revocation have been completely exhausted and that treated commodities have cleared the channels of trade. EPA is proposing expiration/revocation dates of October 30, 2009, for azinphos-methyl tolerances on almond; almond, hulls; pistachio; and walnut; September 30, 2012, for azinphos-methyl tolerances on apple; crabapple; blueberry; cherry; parsley, leaves; parsley, turnip rooted, roots; and pear; October 14, 2009, for disulfoton tolerances on spinach and tomato; January 30, 2010, for disulfoton tolerances on barley, grain; barley, straw; grain, aspirated fractions; peanut; pepper; potato; wheat, hay; wheat, grain; wheat, straw; milk; and the fat, meat, and meat byproducts of cattle, goats, hogs, horses, and sheep; April 2, 2010, for most of the fenvalerate tolerances (as described in Unit II.A.); September 30, 2013, for phosalone tolerances on apple; cherry; grape; peach; pear; and plum, prune, fresh; and December 25, 2010, for thiabendazole tolerances on beet, sugar, dried pulp; beet, sugar, roots; and beet, sugar, tops. The Agency believes that these revocation dates allow users to exhaust stocks and allows sufficient time for passage of treated commodities through the channels of trade. However, if EPA is presented with information that existing stocks would still be available and that information is verified, the Agency will consider extending the expiration date of the tolerance. If you have comments regarding existing stocks and whether the effective date allows sufficient time for treated commodities to clear the channels of trade, please submit comments as described under **SUPPLEMENTARY INFORMATION**.

Any commodities listed in this proposal treated with the pesticides subject to this proposal, and in the channels of trade following the tolerance revocations, shall be subject to FFDCA section 408(l)(5), as established by FQPA. Under this unit, any residues of these pesticides in or on such food shall not render the food adulterated so long as it is shown to the satisfaction of the Food and Drug Administration that:

1. The residue is present as the result of an application or use of the pesticide at a time and in a manner that was lawful under FIFRA, and

2. The residue does not exceed the level that was authorized at the time of the application or use to be present on the food under a tolerance or exemption from tolerance. Evidence to show that food was lawfully treated may include records that verify the dates when the pesticide was applied to such food.

III. Are the Proposed Actions Consistent with International Obligations?

The tolerance actions in this proposal are not discriminatory and are designed to ensure that both domestically produced and imported foods meet the food safety standards established by FFDCA. The same food safety standards apply to domestically produced and imported foods.

In making its tolerance decisions, EPA seeks to harmonize U.S. tolerances with international standards whenever possible, consistent with U.S. food safety standards and agricultural practices. EPA considers the international MRLs established by the Codex Alimentarius is a joint U.N. Food and Agriculture Organization/World Health Organization food standards program, and it is recognized as an international food safety standards-setting organization in trade agreements to which the United States is a party. EPA may establish a tolerance that is different from a Codex MRL; however, FFDCA section 408(b)(4) requires that EPA explain the reasons for departing from the Codex level in a notice published for public comment. EPA's effort to harmonize with Codex MRLs is summarized in the tolerance reassessment section of individual REDs and TREDs, and in the Residue Chemistry document which supports the RED and TRED, as mentioned in Unit II.A. Specific tolerance actions in this proposed rule and how they compare to Codex MRLs (if any) are discussed in Unit II.A.

IV. Statutory and Executive Order Reviews

In this proposed rule, EPA is proposing to establish tolerances under FFDCA section 408(e), and also modify and revoke specific tolerances established under FFDCA section 408. The Office of Management and Budget (OMB) has exempted these types of actions (e.g., establishment and modification of a tolerance and tolerance revocation for which extraordinary circumstances do not exist) from review under Executive Order 12866, entitled *Regulatory Planning and Review* (58 FR 51735, October 4, 1993). Because this proposed rule has been exempted from review under Executive Order 12866 due to its lack of significance, this proposed rule is not subject to Executive Order 13211, entitled *Actions Concerning Regulations That Significantly Affect Energy Supply, Distribution, or Use* (66 FR 28355, May 22, 2001). This proposed rule does not contain any information collections subject to OMB approval under the Paperwork Reduction Act (PRA), 44 U.S.C. 3501 *et seq.*, or impose any enforceable duty or contain any unfunded mandate as described under Title II of the Unfunded Mandates Reform Act of 1995 (UMRA) (Public Law 104–4). Nor does it require any special considerations as required by Executive Order 12898, entitled *Federal Actions to Address Environmental Justice in Minority Populations and Low-Income Populations* (59 FR 7629, February 16, 1994); or OMB review or any other Agency action under Executive Order 13045, entitled *Protection of Children from Environmental Health Risks and Safety Risks* (62 FR 19885, April 23, 1997). This action does not involve any technical standards that would require Agency consideration of voluntary consensus standards pursuant to section 12(d) of the National Technology Transfer and Advancement Act of 1995 (NTTAA), Public Law 104–113, section 12(d) (15 U.S.C. 272 note). Pursuant to the Regulatory Flexibility Act (RFA) (5 U.S.C. 601 *et seq.*), the Agency previously assessed whether establishment of tolerances, exemptions from tolerances, raising of tolerance levels, expansion of exemptions, or revocations might significantly impact a substantial number of small entities and concluded that, as a general matter, these actions do not impose a significant economic impact on a substantial number of small entities. These analyses for tolerance establishments and modifications, and for tolerance revocations were published on May 4, 1981 (46 FR 24950) and on December 17, 1997 (62 FR 66020) (FRL–5753–1), respectively, and were provided to the Chief Counsel for Advocacy of the Small Business Administration. Taking into account this analysis, and available

information concerning the pesticides listed in this proposed rule, the Agency hereby certifies that this proposed rule will not have a significant negative economic impact on a substantial number of small entities. In a memorandum dated May 25, 2001, EPA determined that eight conditions must all be satisfied in order for an import tolerance or tolerance exemption revocation to adversely affect a significant number of small entity importers, and that there is a negligible joint probability of all eight conditions holding simultaneously with respect to any particular revocation. (This Agency document is available in the docket of this proposed rule). Furthermore, for the pesticides named in this proposed rule, the Agency knows of no extraordinary circumstances that exist as to the present proposal that would change the EPA's previous analysis. Any comments about the Agency's determination should be submitted to the EPA along with comments on the proposal, and will be addressed prior to issuing a final rule. In addition, the Agency has determined that this action will not have a substantial direct effect on States, on the relationship between the national government and the States, or on the distribution of power and responsibilities among the various levels of government, as specified in Executive Order 13132, entitled *Federalism* (64 FR 43255, August 10, 1999). Executive Order 13132 requires EPA to develop an accountable process to ensure ''meaningful and timely input by State and local officials in the development of regulatory policies that have federalism implications.'' ''Policies that have federalism implications'' is defined in the Executive order to include regulations that have ''substantial direct effects on the States, on the relationship between the national government and the States, or on the distribution of power and responsibilities among the various levels of government.'' This proposed rule directly regulates growers, food processors, food handlers, and food retailers, not States. This action does not alter the relationships or distribution of power and responsibilities established by Congress in the preemption provisions of section 408(n)(4) of FFDCA. For these same reasons, the Agency has determined that this proposed rule does not have any ''tribal implications'' as described in Executive Order 13175, entitled *Consultation and Coordination with Indian Tribal Governments* (65 FR 67249, November 9, 2000). Executive Order 13175, requires EPA to develop an accountable process to ensure ''meaningful and timely input by tribal officials in the development of regulatory policies that have tribal implications.'' ''Policies that have tribal implications'' is defined in the Executive order to include regulations that have ''substantial direct effects on one or more Indian tribes, on the relationship between the Federal Government and the Indian tribes, or on the distribution of power and responsibilities between the Federal Government and Indian tribes.'' This proposed rule will not have substantial direct effects on tribal governments, on the relationship between the Federal Government and Indian tribes, or on the distribution of power and responsibilities between the Federal Government and Indian tribes, as specified in Executive Order 13175. Thus, Executive Order 13175 does not apply to this proposed rule.

List of Subjects in 40 CFR Part 180

Environmental protection, Administrative practice and procedure, Agricultural commodities, Pesticides and pests, Reporting and recordkeeping requirements.

Dated: December 22, 2008.

Debra Edwards,

Director, Office of Pesticide Programs.

Therefore, it is proposed that 40 CFR chapter I be amended as follows:

PART 180—[AMENDED]

1. The authority citation for part 180 continues to read as follows:

Authority: 21 U.S.C. 321(q), 346a and 371.

§ 180.3 [Amended]

2. Section 180.3 is amended by removing paragraph (d)(7) and redesignating paragraphs (d)(8) through (d)(13) as paragraphs (d)(7) through (d)(12), respectively.

3. Section 180.151 is amended by revising the table in paragraph (a)(1) and by revising paragraph (a)(2) to read as follows:

§ 180.151 Ethylene oxide; tolerances for residues.

(a) * * *

(1) * * *

Commodity	Parts per million
Herb and spice, group 19, dried, except basil	7
Vegetable, dried	7
Walnut	50

(2) Tolerances are established for residues of the ethylene oxide reaction product, 2-chloroethanol, commonly referred to as ethylene chlorohydrin, when ethylene oxide is used as a postharvest fumigant in or on food commodities as follows:

Commodity	Parts per million
Herb and spice, group 19, dried, except basil	940
Vegetable, dried	940

* * * * *

4. Section 180.154 is amended by revising the section heading and the table in paragraph (a) to read as follows:

§180.154 Azinphos-methyl; tolerances for residues.

(a) * * *

Commodity	Parts per million	Expiration/Revocation Date
Almond	0.2	10/30/09
Almond, hulls	5.0	10/30/09
Apple	1.5	9/30/12
Blueberry	5.0	9/30/12
Cherry	2.0	9/30/12
Crabapple	1.5	9/30/12
Parsley, leaves	5.0	9/30/12
Parsley, turnip rooted, roots	2.0	9/30/12
Pear	1.5	9/30/12
Pistachio	0.3	10/30/09
Walnut	0.3	10/30/09

* * * * *

5. Section 180.155 is revised to read as follows:

§ 180.155 1-Naphthaleneacetic acid; tolerances for residues.

(a) *General.* Tolerances are established for the combined residues of the plant growth regulator 1-naphthaleneacetic acid and its conjugates calculated as 1-naphthaleneacetic acid from the application of 1-naphthaleneacetic acid, its ammonium, sodium, or potassium salts, ethyl ester, and acetamide in or on food commodities as follows:

Commodity	Parts per million
Cherry, sweet	0.1
Fruit, pome, group 11	0.1
Olive	0.7
Orange	0.1
Pineapple [1]	0.05
Tangerine	0.1

[1] There are no U.S. registrations since 1988.

(b) *Section 18 emergency exemptions.* [Reserved]

(c) *Tolerances with regional registrations.* [Reserved]

(d) *Indirect or inadvertent residues.* [Reserved]

6. Section 180.183 is amended by revising paragraph (a) and paragraph (c) to read as follows:

§ 180.183 O,O-Diethyl S-[2-(ethylthio)ethyl] phosphorodithioate; tolerances for residues.

(a) *General*. Tolerances are established for the combined residues of the insecticide disulfoton, *O*,*O*-diethyl *S*-[2-(ethylthio)ethyl] phosphorodithioate; demeton-*S*, *O*,*O*-diethyl *S*-[2-(ethylthio)ethyl] phosphorothioate; disulfoton sulfoxide, *O*,*O*-diethyl *S*-[2-(ethylsulfinyl)ethyl] phosphorodithioate; disulfoton oxygen analog sulfoxide, *O*,*O*-diethyl *S*-[2-(ethylsulfinyl)ethyl] phosphorothioate; disulfoton sulfone, *O*,*O*-diethyl *S*-[2-(ethylsulfonyl)ethyl] phosphorodithioate; and disulfoton oxygen analog sulfone, *O*,*O*-diethyl *S*-[2-(ethylsulfonyl)ethyl] phosphorothioate; calculated as disulfoton, in or on food commodities as follows:

Commodity	Parts per million	Expiration/Revocation Date
Barley, grain	0.2	1/30/10
Barley, straw	5.0	1/30/10
Bean, lima	0.75	None
Bean, snap, succulent	0.75	None
Broccoli	0.75	None
Brussels sprouts	0.75	None
Cabbage	0.75	None
Cattle, fat	0.05	1/30/10
Cattle, meat	0.05	1/30/10
Cattle, meat byproducts	0.05	1/30/10
Cauliflower	0.75	None
Coffee, bean	0.2	None
Cotton, undelinted seed	0.75	None
Goat, fat	0.05	1/30/10
Goat, meat	0.05	1/30/10
Goat, meat byproducts	0.05	1/30/10
Grain, aspirated fractions	0.3	1/30/10
Hog, fat	0.05	1/30/10
Hog, meat	0.05	1/30/10
Hog, meat byproducts	0.05	1/30/10
Horse, fat	0.05	1/30/10
Horse, meat	0.05	1/30/10
Horse, meat byproducts	0.05	1/30/10
Lettuce, head	0.75	None
Lettuce, leaf	2	None
Milk	0.01	1/30/10
Peanut	0.1	1/30/10
Pepper	0.1	1/30/10
Potato	0.5	1/30/10
Sheep, fat	0.05	1/30/10
Sheep, meat	0.05	1/30/10
Sheep, meat byproducts	0.05	1/30/10
Spinach	0.75	10/14/09
Tomato	0.75	10/14/09
Wheat, grain	0.2	1/30/10
Wheat, hay	5.0	1/30/10
Wheat, straw	5.0	1/30/10

* * * * *

(c) *Tolerances with regional registrations*. Tolerances with regional registration are established for the combined residues of the insecticide disulfoton, *O*,*O*-diethyl *S*-[2-(ethylthio)ethyl] phosphorodithioate; demeton-*S*, *O*,*O*-diethyl *S*-[2-(ethylthio)ethyl] phosphorothioate; disulfoton sulfoxide, *O*,*O*-diethyl *S*-[2-(ethylsulfinyl)ethyl] phosphorodithioate; disulfoton oxygen analog sulfoxide, *O*,*O*-diethyl *S*-[2-(ethylsulfinyl)ethyl] phosphorothioate; disulfoton sulfone, *O*,*O*-diethyl *S*-[2-(ethylsulfonyl)ethyl] phosphorodithioate; and disulfoton oxygen analog sulfone, *O*,*O*-diethyl *S*-[2-(ethylsulfonyl)ethyl] phosphorothioate; calculated as disulfoton, in or on food commodities as follows:

Commodity	Parts per million
Asparagus	0.1

* * * * *

7. Section 180.242 is amended by revising the table in paragraph (a)(1) to read as follows:

§180.242 Thiabendazole; tolerances for residues.

(a) * * *

(1) * * *

Commodity	Parts per million	Expiration/Revocation Date
Apple, wet pomace	12.0	None
Avocado [1]	10.0	None
Banana, postharvest	3.0	None
Bean, dry, seed	0.1	None
Beet, sugar, dried pulp	3.5	12/25/10
Beet, sugar, roots	0.25	12/25/10
Beet, sugar, tops	10.0	12/25/10
Cantaloupe [1]	15.0	None
Carrot, roots, postharvest	10.0	None
Citrus, oil	15.0	None
Fruit, citrus, group 10, postharvest	10.0	None
Fruit, pome, group 11, postharvest	5.0	None
Mango	10.0	None
Mushroom	40.0	None
Papaya, postharvest	5.0	None
Potato, postharvest	10.0	None
Soybean	0.1	None
Strawberry [1]	5.0	None
Sweet potato (postharvest to sweet potato intended only for use as seed)	0.05	None
Wheat, grain	1.0	None
Wheat, straw	1.0	None

[1] There are no U.S. registrations on the indicated commodity.

* * * * *

8. Section 180.261 is amended by revising the table in paragraph (a) to read as follows:

§180.261 N-Mercaptomethyl phthalimide S-(O,O-dimethyl phosphorodithioate) and its oxygen analog; tolerances for residues.

(a) * * *

Commodity	Parts per million
Alfalfa, forage	20
Alfalfa, hay	40
Almond, hulls	10
Apple	10
Apricot	5
Blueberry	10
Cattle, fat	0.2
Cattle, meat	0.1
Cattle, meat byproducts	0.1
Cherry	10
Cotton, refined oil	0.2
Cotton, undelinted seed	0.1
Cranberry	10
Fruit, citrus, group 10	5
Goat, fat	0.1
Goat, meat	0.1
Goat, meat byproducts	0.1
Grape	10
Hog, fat	0.2
Hog, meat	0.04
Hog, meat byproducts	0.04
Horse, fat	0.1
Horse, meat	0.1
Horse, meat byproducts	0.1
Kiwifruit	25
Milk	0.1
Nectarine	5
Nut, tree, group 14	0.1
Pea, dry, seed	0.5
Pea, field, hay	20
Pea, field, vines	10
Pea, succulent	1
Peach	10
Pear	10
Plum, prune, fresh	5
Potato	0.1
Sheep, fat	0.1
Sheep, meat	0.1
Sheep, meat byproducts	0.1
Sweet potato, roots	12

* * * * *

9. Section 180.263 is revised to read as follows:

§180.263 Phosalone; tolerances for residues.

(a) *General.* Tolerances are established for residues of the insecticide phosalone, *S*-(6-chloro-3-(mercaptomethyl)-2-benzoxazolinone) *O,O*-diethyl phosphorodithioate, in or on the following food commodities:

Commodity	Parts per million	Expiration/ Revocation Date
Apple [1]	10.0	9/30/13
Cherry [1]	15.0	9/30/13
Grape [1]	10.0	9/30/13
Peach [1]	15.0	9/30/13
Pear [1]	10.0	9/30/13
Plum, prune, fresh [1]	15.0	9/30/13

[1] There are no U.S. registrations since 1992.

(b) *Section 18 emergency exemptions.* [Reserved]

(c) *Tolerances with regional registrations.* [Reserved]

(d) *Indirect or inadvertent residues.* [Reserved]

§ 180.309 [Removed]

10. Section 180.309 is removed.

11. Section 180.379 is revised to read as follows:

§180.379 Fenvalerate; tolerances for residues.

(a) *General.* Tolerances are established for residues of the insecticide fenvalerate, cyano(3-phenoxyphenyl)methyl-4-chloro-α-(1-methylethyl)benzeneacetate, in or on food commodities as follows:

Commodity	Parts per million	Expiration/Revocation Date
Almond	0.2	4/2/10
Almond, hulls	15.0	4/2/10
Apple	2.0	4/2/10
Artichoke, globe	0.2	4/2/10
Bean, dry, seed	0.25	4/2/10
Bean, snap, succulent	2.0	4/2/10
Broccoli	2.0	4/2/10
Blueberry	3.0	4/2/10
Cabbage	10.0	4/2/10
Caneberry subgroup 13A	3.0	4/2/10
Cantaloupe	1.0	4/2/10
Carrot, roots	0.5	4/2/10
Cattle, fat	1.5	4/2/10
Cattle, meat	1.5	4/2/10
Cattle, meat byproducts	1.5	4/2/10
Cauliflower	0.5	4/2/10
Collards	10.0	4/2/10
Corn, field, forage	50.0	4/2/10
Corn, field, grain	0.02	4/2/10
Corn, field, stover	50.0	4/2/10
Corn, pop, grain	0.02	4/2/10
Corn, pop, stover	50.0	4/2/10
Corn, sweet, forage	50.0	4/2/10
Corn, sweet, kernel plus cob with husks removed	0.1	4/2/10
Corn, sweet, stover	50.0	4/2/10
Cotton, undelinted seed	0.2	4/2/10
Cucumber	0.5	4/2/10
Currant	3.0	4/2/10
Eggplant	1.0	4/2/10
Elderberry	3.0	4/2/10
Fruit, stone, group 12	10.0	4/2/10
Goat, fat	1.5	4/2/10
Goat, meat	1.5	4/2/10
Goat, meat byproducts	1.5	4/2/10
Gooseberry	3.0	4/2/10
Hazelnut	0.2	4/2/10
Hog, fat	1.5	4/2/10
Hog, meat	1.5	4/2/10
Hog, meat byproducts	1.5	4/2/10
Horse, fat	1.5	4/2/10
Horse, meat	1.5	4/2/10
Horse, meat byproducts	1.5	4/2/10
Huckleberry	3.0	4/2/10
Melon, honeydew	1.0	4/2/10
Milk	0.3	4/2/10
Milk, fat	7.0	4/2/10
Muskmelon	1.0	4/2/10
Pea	1.0	4/2/10
Pea, dry, seed	0.25	4/2/10
Peanut	0.02	4/2/10
Pear	2.0	4/2/10
Pecan	0.2	4/2/10
Pepper	1.0	4/2/10
Potato	0.02	4/2/10
Pumpkin	1.0	4/2/10
Radish, roots	0.3	4/2/10
Radish, tops	8.0	4/2/10
Sheep, fat	1.5	4/2/10
Sheep, meat	1.5	4/2/10
Sheep, meat byproducts	1.5	4/2/10
Soybean, seed	0.05	4/2/10
Squash, summer	0.5	4/2/10
Squash, winter	1.0	4/2/10
Sugarcane, cane	2.0	4/2/10
Sunflower, seed	1.0	4/2/10
Tomato	1.0	4/2/10
Turnip, roots	0.5	4/2/10
Turnip, tops	20.0	4/2/10
Walnut	0.2	4/2/10
Watermelon	1.0	4/2/10

(b) *Section 18 emergency exemptions.* [Reserved]

(c) *Tolerances with regional registrations.* [Reserved]

(d) *Indirect or inadvertent residues.* [Reserved]

§ 180.452 [Amended]

12. Section 180.452 is amended by removing from the table in paragraph (a) the entry ''corn, sweet, kernel plus cob with husks removed.''

13. Section 180.533 is amended by revising paragraph (a) and adding paragraph (c) to read as follows:

§180.533 Esfenvalerate; tolerances for residues.

(a) *General.* (1) Tolerances are established for the combined residues of the insecticide esfenvalerate, (*S*)-cyano(3-phenoxyphenyl)methyl-(*S*)-4-chloro-α-(1-methylethyl)benzeneacetate, its non-racemic isomer, (*R*)-cyano(3-phenoxyphenyl)methyl-(*R*)-4-chloro-α-(1-methylethyl)benzeneacetate and its diastereomers (*S*)-cyano(3-phenoxyphenyl)methyl-(*R*)-4-chloro-α-(1-methylethyl)benzeneacetate and (*R*)-cyano(3-phenoxyphenyl)methyl-(*S*)-4-chloro-α-(1-methylethyl)benzeneacetate, in or on food commodities as follows:

Commodity	Parts per million
Almond	0.2
Almond, hulls	5.0
Apple	1.0
Artichoke, globe	1.0
Bean, dry, seed	0.25
Bean, snap, succulent	1.0
Beet, sugar, roots	0.05
Beet, sugar, tops	5.0
Blueberry	1.0
Broccoli	1.0
Cabbage, except chinese cabbage	3.0
Caneberry subgroup 13A	1.0
Cantaloupe	0.5
Carrot, roots	0.5
Cattle, fat	1.5
Cattle, meat	1.5
Cattle, meat byproducts	1.5
Cauliflower	0.5
Collards	3.0
Corn, field, forage	15.0
Corn, field, grain	0.02
Corn, field, stover	15.0
Corn, pop, grain	0.02
Corn, pop, stover	15.0
Corn, sweet, forage	15.0
Corn, sweet, kernel plus cob with husks removed	0.1
Corn, sweet, stover	15.0
Cotton, undelinted seed	0.2
Cucumber	0.5
Egg	0.03
Eggplant	0.5
Elderberry	1.0
Fruit, stone, group 12	3.0
Goat, fat	1.5
Goat, meat	1.5
Goat, meat byproducts	1.5
Gooseberry	1.0
Hazelnut	0.2
Hog, fat	1.5
Hog, meat	1.5
Hog, meat byproducts	1.5
Horse, fat	1.5
Horse, meat	1.5
Horse, meat byproducts	1.5
Kiwifruit	0.5
Lentil, seed	0.25
Melon, honeydew	0.5
Milk	0.3
Milk, fat	7.0
Muskmelon	0.5
Mustard greens	5.0
Pea, dry, seed	0.25
Pea, succulent	0.5

Commodity	Parts per million
Peanut	0.02
Pear	1.0
Pecan	0.2
Pepper	0.5
Potato	0.02
Poultry, fat	0.3
Poultry, liver	0.03
Poultry, meat	0.03
Poultry, meat byproducts, except liver	0.3
Pumpkin	0.5
Radish, roots	0.3
Radish, tops	3.0
Sheep, fat	1.5
Sheep, meat	1.5
Sheep, meat byproducts	1.5
Sorghum, forage	10.0
Sorghum, grain, grain	5.0
Sorghum, grain, stover	10.0
Soybean, seed	0.05
Squash, summer	0.5
Squash, winter	0.5
Sugarcane, cane	1.0
Sunflower, seed	0.5
Sweet potato, roots	0.05
Tomato	0.5
Turnip, roots	0.5
Turnip, tops	7.0
Walnut	0.2
Watermelon	0.5

(2) A tolerance of 0.05 ppm on raw agricultural food commodities (other than those food commodities already covered by a higher tolerance as a result of use on growing crops) is established for the combined residues of the insecticide esfenvalerate, (*S*)-cyano(3-phenoxyphenyl)methyl-(*S*)-4-chloro-α-(1-methylethyl)benzeneacetate, its non-racemic isomer, (*R*)-cyano(3-phenoxyphenyl)methyl-(*R*)-4-chloro-α-(1-methylethyl)benzeneacetate and its diastereomers (*S*)-cyano(3-phenoxyphenyl)methyl-(*R*)-4-chloro-α-(1-methylethyl)benzeneacetate and (*R*)-cyano(3-phenoxyphenyl)methyl-(*S*)-4-chloro-α-(1-methylethyl)benzeneacetate as a result of the use of esfenvalerate in food-handling establishments.

* * * * *

(c) *Tolerances with regional registrations*. Tolerances with regional registration are established for the combined residues of the insecticide esfenvalerate, (*S*)-cyano(3-phenoxyphenyl)methyl-(*S*)-4-chloro-α-(1-methylethyl)benzeneacetate, its non-racemic isomer, (*R*)-cyano(3-phenoxyphenyl)methyl-(*R*)-4-chloro-α-(1-methylethyl)benzeneacetate and its diastereomers (*S*)-cyano(3-phenoxyphenyl)methyl-(*R*)-4-chloro-α-(1-methylethyl)benzeneacetate and (*R*)-cyano(3-phenoxyphenyl)methyl-(*S*)-4-chloro-α-(1-methylethyl)benzeneacetate, in or on food commodities as follows:

Commodity	Parts per million
Cabbage, chinese, bok choy	1.0
Kohlrabi	2.0
Lettuce, head	5.0

* * * * *

§ 180.626 [Amended]

14. Section 180.626 is amended by removing the entry for peanut, hay from the table in paragraph (a)(1).

[FR Doc. E8–31182 Filed 12–30–08; 8:45 am]

BILLING CODE 6560–50–S

FEDERAL COMMUNICATIONS COMMISSION

47 CFR Part 73

[MB Docket No. 08–255; FCC 08–281]

Implementation of Short-term Analog Flash and Emergency Readiness Act; Establishment of DTV Transition ''Analog Nightlight'' Program

AGENCY: Federal Communications Commission.

ACTION: Proposed rule.

SUMMARY: This document describes and seeks comment on the Commission's implementation of the Short-term Analog Flash and Emergency Readiness Act (''Analog Nightlight Act''), S. 3663, 110th Cong., as enacted December 23, 2008. The Analog Nightlight Act requires the Commission to develop and implement a program by January 15, 2009, to ''encourage and permit'' continued analog TV service for a period of thirty days after the February 17, 2009 DTV transition date, where technically feasible, to provide ''public safety information'' and ''DTV transition information.'' For consumers who are not capable of receiving digital television signals by the transition deadline, the Analog Nightlight program proposed herein will ensure that there is no interruption in the provision of critical emergency information and will provide useful information regarding the transition to help consumers establish digital service.

DATES: Comments are due on or before January 5, 2009; reply comments are due on or before January 8, 2009.

ADDRESSES: You may submit comments, identified by MB Docket No. 08–255, by any of the following methods:

- Federal eRulemaking Portal: *http://www.regulations.gov.* Follow the instructions for submitting comments.
- Federal Communications Commission's Web Site: *http://www.fcc.gov/cgb/ecfs/.* Filers should follow the instructions provided on the Web site for submitting comments. In completing the transmittal screen, filers should include their full name, U.S. Postal Service mailing address, and the applicable docket or rulemaking number.
- E-mail: *ecfs@fcc.gov.* To get filing instructions, filers should send an e-mail to *ecfs@fcc.gov*, and include the following words in the body of the message, ''get form.'' A sample form and directions will be sent in response.
- Mail: Filings can be sent by commercial overnight courier or by first-class or overnight U.S. Postal Service mail (although we continue to experience delays in receiving U.S. Postal Service mail). Parties who choose to file by paper must file an original and four copies of each filing. If more than one docket or rulemaking number appears in the caption of this proceeding, filers must submit two additional copies for each additional docket or rulemaking number. All filings must be addressed to the Commission's Secretary, Office of the Secretary, Federal Communications Commission. Commercial overnight mail (other than U.S. Postal Service Express Mail and Priority Mail) must be sent to 9300 East Hampton Drive, Capitol Heights, MD 20743. U.S. Postal Service first-class, Express, and Priority mail should be addressed to 445 12th Street, SW., Washington, DC 20554.
- Hand Delivery/Courier: Filings can be sent by hand or messenger delivery. The Commission's contractor will receive hand-delivered or messenger-delivered paper filings for the Commission's Secretary at 236 Massachusetts Avenue, NE., Suite 110, Washington, DC 20002. The filing hours at this location are 8 a.m. to 7 p.m. All hand deliveries must be held together with rubber bands or fasteners. Any envelopes must be disposed of before entering the building. Parties who choose to file by paper must file an original and four copies of each filing. All filings must be addressed to the Commission's Secretary, Office of the Secretary, Federal Communications Commission.
- Accessibility Information: Contact the FCC to request information in accessible formats (computer diskettes, large print, audio recording, and Braille) by sending an e-mail to *fcc504@fcc.gov* or calling the FCC's Consumer and Governmental Affairs Bureau at (202) 418–0530 (voice), (202) 418–0432 (TTY). This document can also be downloaded in Word and Portable Document Format (PDF) at: *http://www.fcc.gov.*

Instructions: All submissions received must include the agency name and docket number for this rulemaking. Comments, reply comments, and ex parte submissions will be available for public inspection during regular business hours in the FCC Reference Center, Federal Communications Commission, 445 12th Street, SW., CY–A257, Washington, DC 20554. These documents will also be available via ECFS. Documents will be available electronically in ASCII, Word 97, and/or Adobe Acrobat. For detailed instructions for submitting comments and additional information on the rulemaking process, see the **SUPPLEMENTARY INFORMATION** section of this document.

FOR FURTHER INFORMATION CONTACT: Kim Matthews, *Kim.Matthews@fcc.gov*, or Evan Baranoff, *Evan.Baranoff@fcc.gov* of the Media Bureau, Policy Division, (202) 418–2120; or Eloise Gore, *Eloise.Gore@fcc.gov*, of the Media Bureau, Policy Division, (202) 418–2120; or Gordon Godfrey, *Gordon.Godfrey@fcc.gov*, of the Media Bureau, Engineering Division, (202) 418–7000; or Alan Stillwell, *Alan.Stillwell@fcc.gov*, of the Office of Engineering and Technology, (202) 418–2470.

SUPPLEMENTARY INFORMATION: This is a summary of the Commission's *Notice of Proposed Rulemaking* (NPRM), FCC 08–281, adopted on December, 24, 2008, and released on December 24, 2008. The full text of this document is available for public inspection and copying during regular business hours in the FCC Reference Center, Federal Communications Commission, 445 12th Street, SW., CY–A257, Washington, DC 20554. These documents will also be available via ECFS (*http://www.fcc.gov/cgb/ecfs/*). (Documents will be available electronically in ASCII, Word 97, and/or Adobe Acrobat.) The complete text may be purchased from the Commission's copy contractor, 445 12th Street, SW., Room CY–B402, Washington, DC 20554. To request this document in accessible formats (computer diskettes, large print, audio recording, and Braille), send an e-mail to *fcc504@fcc.gov* or call the Commission's Consumer and Governmental Affairs Bureau at (202) 418–0530 (voice), (202) 418–0432 (TTY).

Summary of the Notice of Proposed Rulemaking

I. Introduction

1. The Short-term Analog Flash and Emergency Readiness Act (''Analog Nightlight Act'' or ''Act'') requires the Commission to develop and implement a program by January 15, 2009, to ''encourage and permit'' continued analog TV service after the February 17, 2009 DTV transition date, where technically feasible, for the purpose of providing ''public safety information'' and ''DTV transition information'' to viewers who may not obtain the necessary equipment to receive digital broadcasts after the transition date. In this way, the continued analog service would serve like a ''nightlight'' to unprepared viewers, assuring that these viewers continue to have access to emergency information and guiding them with information to help them make a belated transition. This NPRM describes the procedures the Commission intends to follow to implement the Act; the nature of the programming permitted by the Act; and the stations that are eligible to participate in the Analog Nightlight program. Stations that are eligible under the Act to provide nightlight service may choose to provide their own service on their analog channels, or may choose to work with other stations in their community to provide a comprehensive nightlight service on one or more analog channels in that community. Stations that cannot broadcast their own nightlight service can participate in a joint nightlight effort together with other stations in their community by providing financial, technical, or other resources.

2. Congress previously mandated that after February 17, 2009, full-power television broadcast stations must transmit only digital signals, and may no longer transmit analog signals. (*See* Digital Television and Public Safety Act of 2005 (''DTV Act''), which is Title III of the Deficit Reduction Act of 2005, Public Law 109–171, 120 Stat. 4 (2006) (*codified at* 47 U.S.C. 309(j)(14) and 337(e)).) On December 10, 2008, Congress adopted legislation providing for a short-term extension of the analog television broadcasting authority so that essential public safety announcements and digital television transition information may be provided for a short time during the digital transition. The Analog Nightlight Act requires that, no later than January 15, 2009, the Commission develop and implement a program to ''encourage and permit'' the broadcasting of public safety and digital transition information for a period of 30 days after the digital transition deadline of February 17, 2009. Given the ''urgent necessity for rapid administrative action under the circumstances,'' we believe that there is good cause to dispense with notice and comment requirements under the Administrative Procedure Act. As stated above, the Analog Nightlight Act imposes a statutory deadline of January 15, 2009, less than one month away, and the Commission has an extraordinarily short time period to meet this deadline: The bill was sent to the President for his signature on December 12, 2008, and it was enacted into law on December 23, 2008. Nonetheless, we are affording interested parties an opportunity to participate in the proceeding in order to assist in our development of the Analog Nightlight program, and we find that a very abbreviated comment period of eight days is justified by the exigent circumstances. (As noted above, the Analog Nightlight Act directs the Commission to implement its provisions by January 15, 2009, ''[n]otwithstanding any other provision of law.'' We find that a longer comment period would make timely implementation impracticable and, therefore, would be inconsistent with the Act's provisions. Comments must be filed no later than five days after this NPRM is published in the **Federal Register**, and replies must be filed no later than eight days after publication. Notwithstanding the holiday season, these dates will not be extended.) This NPRM lays out the procedures we plan to follow, as well as a preliminary list of the stations that we believe will be eligible to participate in the Analog Nightlight program. We encourage all stations that qualify to notify us promptly, during the comment period, as described below, of their intention to participate.

3. We strongly encourage all eligible stations to participate in the provision of a nightlight service to assist consumers during the 30-day period following the digital transition. We also urge stations that are not on the preliminary list of eligible stations to determine whether they can participate and to seek Commission approval by demonstrating that they will not, in fact, cause harmful interference to any other digital station, or to coordinate with another broadcaster in their service area to share the costs of Analog Nightlight operation on a qualifying station that serves their viewers. While some stations may not be able to broadcast transition and public safety information on their analog channels after February 17, 2009 because of interference to digital signals or other technical constraints, we strongly encourage all stations to work together to ensure that at least one station serving each community provides a nightlight service to assist that community. The station whose channel is being used to provide

the nightlight service will remain responsible for the content of the programming.

4. The Commission, in conjunction with industry stakeholders, state and local officials, community grassroots organizations, and consumer groups, has worked hard to increase consumer awareness of the digital transition, and these efforts have been fruitful. (Many industry members have been working hard to educate consumers about the upcoming transition including broadcasters, multichannel video programming distributors, telecommunications companies, satellite providers, manufacturers, and retailers. According to the latest Nielsen DTV report, more than 92 percent of U.S. households are aware of and prepared, at least to some extent, for the transition.) All of our efforts will continue and intensify up to and beyond the transition deadline. However, it is inevitable that on February 17, 2009 some consumers will be unaware of the transition, some will be unprepared to receive digital signals, and others will experience unexpected technical difficulties. For these consumers, the Analog Nightlight program adopted by Congress and implemented as we propose herein will ensure that there is no interruption in the provision of critical emergency information and will provide useful information regarding the transition to help consumers establish digital service.

II. Background and Initial Conclusions

5. The Analog Nightlight Act is designed to ensure that those consumers who are not able to receive digital signals after the DTV transition on February 17, 2009, will not be left without access to emergency information. The Act is also intended to help consumers understand the steps they need to take in order to restore their television signals. The analog nightlight was first used by the broadcasters in Wilmington, North Carolina, who volunteered to transition their market on September 8, 2008. They ceased analog broadcasting on that date but continued to broadcast their analog signals for roughly a month, displaying a ''slate'' describing the transition and where people could obtain information about it. (The text aired by the Wilmington stations consisted of the following: ''At 12 noon on September 8, 2008, commercial television stations in Wilmington, North Carolina began to broadcast programming exclusively in a digital format. If you are viewing this message, this television set has not yet been upgraded to digital. To receive your television signals, upgrade to digital now with a converter box, a new TV set with a digital (ATSC) tuner or by subscribing to a pay service like cable or satellite. For more information call: 1–877-DTV–0908 or TTY: 1–866–644–0908 or visit *http://www.DTVWilmington.com.*'') In enacting the Analog Nightlight Act, Congress acknowledged that the FCC and others ''have been working furiously'' to inform viewers about the transition, but also recognized that there will inevitably be some consumers left behind. Congress also recognized that when viewers are cut off from their televisions, it is not just a matter of convenience but also one of public safety. The concern about readiness is especially acute with regard to the nation's more vulnerable citizens—the poor, the elderly, the disabled, and those with language barriers—who may be less prepared to ensure they will have continued access to television service.

6. Section 2(a) of the Analog Nightlight Act states:

Notwithstanding any other provision of law, the Federal Communications Commission shall, not later than January 15, 2009, develop and implement a program to encourage and permit, to the extent technically feasible and subject to such limitations as the Commission finds to be consistent with the public interest and requirements of this Act, the broadcasting in the analog television service of only the public safety information and digital transition information specified in subsection (b) during the 30-day period beginning on the day after the date established by law under section 3002(b) of the [DTV Act] for termination of all licenses for full-power television stations in the analog television service and cessation of broadcasting by full-power stations in the analog television service.

7. Thus, as required by this Act, the Analog Nightlight program will permit eligible full-power television stations, as defined below, to continue their analog broadcasting for a period of 30 days beginning on February 18, 2009, for the limited purpose of providing public safety and digital transition information, as further described below. The 30-day period ends at 11:59:59 p.m. on March 19, 2009. As discussed below, we will extend the license term for stations participating in the Analog Nightlight program.

8. Section 2(b) of the Act describes the programming that stations will be permitted to broadcast during the nightlight period. That section states that the nightlight program shall provide for the broadcast of:

(1) Emergency information, including critical details regarding the emergency, as broadcast or required to be broadcast by full-power stations in the digital television service; (Section 4 of the Act states that the term ''emergency information'' has the same meaning as that term has under Part 79 of the FCC's rules. See Analog Nightlight Act, Section 4.)

(2) Information, in both English and Spanish, and accessible to persons with disabilities, concerning—

(A) The digital television transition, including the fact that a transition has taken place and that additional action is required to continue receiving television service, including emergency notifications; and

(B) The steps required to enable viewers to receive such emergency information via the digital television service and to convert to receiving digital television service, including a phone number and Internet address by which help with such transition may be obtained in both English and Spanish; and

(3) Such other information related to consumer education about the digital television transition or public health and safety or emergencies as the Commission may find to be consistent with the public interest.

9. Based on these statutory provisions, continued analog broadcasting after February 17, 2009, is limited to emergency information and information concerning the digital television transition. The Act does not contemplate other programming, including advertisements, which does not fall into either of these two categories. We seek comment on this tentative conclusion.

10. Section 3 of the Act requires, among other things, that the Commission consider ''market-by-market needs, based on factors such as channel and transmitter availability'' in developing the nightlight program, and requires the Commission to ensure that the broadcasting of analog nightlight information will not cause ''harmful interference'' to digital television signals. Section 3 also mandates that the Commission ''not require'' that analog nightlight signals be subject to mandatory cable carriage and retransmission requirements. In addition, Section 3 prohibits the broadcasting of analog nightlight signals on spectrum ''approved or pending approval by the Commission to be used for public safety radio services'' and on channels 52–69. Based on this section of the Act, we tentatively conclude that only stations operating on channels 2 through 51 are eligible to broadcast in

analog pursuant to the Act, and that such channels cannot be used for analog broadcasting if they cause harmful interference to digital television signals. Therefore, a station that is ''flashcutting'' to its pre-transition analog channel for post-transition digital operation will not generally be eligible to use its analog channel for the Analog Nightlight because to do so would by definition interfere with its digital service. (As discussed below, a station that is approved for a phased transition to remain on its pre-transition digital channel may be permitted to use its analog channel for the analog nightlight program if doing so does not delay its transition to digital service. These circumstances will be evaluated on a case-by case basis.) We seek comment on these tentative conclusions.

III. Discussion

A. Stations Eligible To Provide Analog Nightlight Service

1. Stations Initially Determined To Be Eligible

11. In light of the short period of time provided by the Act to implement a nightlight program, we attach as Appendix A hereto an initial list of stations that we believe can continue to broadcast an analog signal after February 17, 2009 within the technical and interference constraints set forth in the statute. The stations listed in Appendix A are located in 46 states, plus Washington, DC, Puerto Rico, and the Virgin Islands and are in 136 of the 210 Designated Market Areas (''DMAs''). (Appendix A includes stations that have terminated or plan to terminate analog service before February 17, 2009, including the stations in Hawaii that are transitioning statewide on January 15, 2009, and the stations in the Wilmington, North Carolina DMA that transitioned on September 8, 2008. These stations could continue or resume analog broadcasting as part of the Analog Nightlight program without causing harmful interference. This Appendix also lists stations that are going to remain on their pre-transition digital channel for a period of time after February 17, 2009 while they are completing construction of their final post-transition channel. In the listed instances, these stations could use their analog channel for the Analog Nightlight program. Appendix A does not include stations licensed to communities in Delaware, New Jersey, New Hampshire, or Rhode Island. See also Appendix B, which lists all 210 DMAs and indicates which DMAs do or do not include a station that is listed in Appendix A.) Appendix A is not an exhaustive list of the stations that may be eligible to participate in the Analog Nightlight program, and it most likely underestimates the stations that could qualify. Rather, Appendix A represents a conservative list that the Commission was able to assemble in the limited timeframe contemplated by the legislation based on readily accessible information and valid engineering assumptions. As discussed above, Section 3(2) of the Act requires the Commission to ensure that broadcasting of nightlight signals on analog channels does not cause harmful interference to digital television signals. In addition, Section 3(5) prohibits the broadcast of nightlight service on spectrum that ''is approved or pending approval'' by the Commission for public safety services, and Section 3(6) prohibits nightlight service on channels 52–69. We tentatively conclude that the stations listed in Appendix A meet these criteria and invite comment on this tentative conclusion. As described below, we also recognize that additional stations may be able to meet the statutory criteria and we provide a mechanism for their participation, consistent with the goal of having the Analog Nightlight available to as many over-the-air viewers as possible. To that end, the Commission will identify those areas in which Analog Nightlight service is not available and, within the limited timeframes available, seek reasonable solutions—*e.g.*, whether there is a station that can and would stay on to provide Analog Nightlight service without causing undue interference, or whether there is a low power station that has not transitioned to digital that would be willing to transmit the relevant messages. We seek comment on what the Commission's appropriate role should be in this regard.

12. The stations listed in Appendix A operate on analog channels 2–51 and therefore comply with Section 3(6) of the Act. With respect to Section 3(2) of the Act, in considering interference protection for digital TV stations, we used the +2 dB desired-to-undesired (D/U) co-channel and −48 dB adjacent channel signal ratios in 47 CFR 73.623 and developed minimum co-channel and adjacent channel spacing measures that would ensure that an analog station would not cause interference to a DTV station. Meeting these measures, which vary by channel band and Zone, would establish a presumption that analog stations that are located the specified distance or greater from any operating DTV stations would not cause interference to signals in the digital television service. (For the purposes of allotment and assignment, the United States is divided into three zones as defined in Section 73.609. Roughly, Zone I includes areas in the northeastern and some midwestern states, Zone III includes the area along the Gulf of Mexico, and Zone II includes all areas that are not in Zone I or Zone III. 47 CFR 73.609.) The minimum spacing measures used in developing this list are:

Channel band	Zone (see 47 CFR 73.609)	Co-channel minimum spacing	Adjacent channel minimum spacing
2–6 (Low-VHF)	1	302 km (188 miles)	131 km (81 miles).
2–6 (Low-VHF)	2 and 3	344 km (214 miles)	156 km (97 miles).
7–13 (High-VHF)	1	264 km (164 miles)	118 km (73 miles).
7–13 (High-VHF)	2 and 3	308 km (191 miles)	149 km (93 miles).
14–51 (UHF)	1, 2 and 3	283 km (176 miles)	134 km (83 miles).

13. In developing these spacing criteria, we assumed that both the analog station being studied and DTV stations in the same vicinity are operating at maximum power and antenna height allowed under the rules. (The maximum transmit antenna height above average terrain (antenna HAAT) and power limits for low-VHF (channels 2–6), high-VHF (channels 7–13), and UHF (channels 14–51) stations are set forth in Section 73.622(f) of the rules, 47 CFR 73.622(f). The maximum antenna HAAT allowed for DTV stations on channels 2–13 is 305 meters and on channels 14–51 is 365 meters (power reductions are required if higher antennas are used), the maximum power limits are (1) for low-VHF, 10 kW in Zone I and 45 kW in Zones II and III; (2) for hi-VHF, 30 kW in Zone I and 160 kW in Zone II; and (3) for UHF, 1000 kW. Certain stations were allowed to use somewhat higher power on their DTV channels in order to replicate their analog stations; however, for purposes of this brief 30 day extension of analog

operation we would assume that all stations are operating at power levels no higher than the maximum levels in the rules. The minimum technical criteria (D/U ratios) for protection of digital television signals from interference from analog signals are set forth in Section 73.623(c)(2) of the rules, 47 CFR 73.623(c)(2). In developing these spacing measures we also used (1) the F(50,90) curves as derived from the F(50,50) and F(50,10) curves in Section 73.699 of the rules, 47 CFR 73.699, and the DTV service thresholds in Section 73.622(e) of the rules, 47 CFR 73.622(e), to calculate DTV service areas and (2) the analog maximum power and antenna height standards in Section 73.614 of the rules, 47 CFR 73.614, and the F(50,10) curves in Section 73.699 to calculate analog interference potential.) We also assumed that viewers would orient their antennas toward the desired DTV station and away from an analog station in a neighboring or distant market so that the front-to-back reception ratio of a user's antenna would be 10 dB at low-VHF, 12 dB at high VHF and 14 dB at UHF as indicated in the DTV planning factors set forth in our OET Bulletin No. 69 (OET–69). (*See* Federal Communications Commission, Office of Engineering and Technology, OET Bulletin No. 69 ''Longley-Rice Methodology for Evaluating TV Coverage and Interference,'' February 6, 2004, at p. 10, Table 6. This bullet in is available on the Internet at: *http://www.fcc.gov/Bureaus/Engineering_Technology/Documents/bulletins/oet69/oet69.pdf*. We further assumed that an analog station would not cause interference to a co-located adjacent channel digital station, *i.e.*, a digital station within 5 km (3 miles), and we did not apply adjacent channel protection between channels 4 and 5, channels 6 and 7 and channels 13 and 14 as those channels are not adjacent in the frequency spectrum. We propose to use these separation distances to protect digital TV signals from analog signals during the 30-day Analog Nightlight period. We request comment on these parameters for protecting digital signals from harmful interference for this limited time and for this limited purpose. We note that it is our intention to use conservative factors, which are more likely to over-protect a digital signal, for this purpose rather than to risk interference that will hinder viewer reception of DTV signals. In developing these criteria based on the statutory mandate, we are attempting to balance the goal of encouraging use of the Analog Nightlight to benefit viewers who have not obtained the necessary digital equipment to receive digital signals, with the public interest in promoting good digital signal reception for viewers who have.

14. Public safety services operate in the TV bands in 13 metropolitan areas on channels in the range of 14–20 (470–412 MHz) that have previously been identified in each area. (Public safety services operate on specified channels in the TV bands as part of the Private Land Mobile Radio Service (PLMRS), *see* 47 CFR 90.303(a). PLMRS base stations on these channels must be located within 80 kilometers (50 miles) of the center of the cities where they are permitted to operate on channels 14–20 (470–512 MHz), and mobile units may be operated within 48 kilometers (30 miles) of their associated base station or stations. Thus, mobile stations may be operated at up to 128 kilometers (80 miles) from the city center, *see* 47 CFR 90.305.) To protect these operations from interference, new and modified analog TV stations are required to protect land mobile operations on channels 14–20 by maintaining a co-channel separation of 341 km (212 miles) or more and an adjacent channel separation of 225 km (140 miles) or more from the geographic coordinates of the center of the metropolitan area. These standards have served well over the years to ensure that new and modified analog stations do not cause interference to land mobile operations in the TV bands. In developing the Appendix A list of analog stations that are eligible to operate after the transition ends, we used these same separation standards to protect land mobile operations on channels 14–20 from interference from analog TV operations. (*See* 47 CFR 73.623(e) for the list of land mobile communities and channels.) We note that the analog stations that will operate under this authority have been operating without causing interference to public safety or other land mobile operations in those channels prior to the transition, and we expect that these stations will continue to operate in that manner during the 30-day Analog Nightlight Act period. We request comment on use of these standards and assumptions to protect public safety operations on channels 14–20 from interference from analog signals used for the Analog Nightlight program.

2. Other Stations That May Meet Eligibility Requirements

15. Broadcasters whose stations are not listed in Appendix A and who are interested in providing nightlight service may submit engineering and other information to demonstrate why they believe they meet the criteria identified in the Act. We recognize that there are many analog stations that are currently operating close to digital stations without causing interference. In such cases, interference is avoided by stations operating at less than the maximum allowed technical facilities, terrain features, or other conditions affecting propagation. We propose to allow stations to notify the Commission of their interest in participating in the Analog Nightlight program even if their spacing is less than the distances proposed above from one or more co-channel or adjacent channel digital stations. Such stations should notify us in their comments to this NPRM and through the Engineering STA process described below, and explain how they could operate without causing harmful interference to nearby digital station(s). Such explanations may consist of analyses using the methods in OET–69 or other recognized methodologies for evaluating TV station interference. It is important that licensees be aware that interference that an analog station may be causing to digital stations prior to February 18, 2009, will not be allowed to continue after that date unless authorized pursuant to paragraph 16. We anticipate that we will be able to rely on the submissions we receive and public review to identify stations that may pose a problem. We delegate to the Media Bureau authority to address expeditiously issues that may arise associated with this process.

16. We tentatively conclude that we will permit a station not listed in Appendix A to provide nightlight service if the station would cause no more than 0.1 percent new interference to a digital station in addition to that reflected in the DTV Table Appendix B. (The details of each station's DTV (post-transition) channel assignment, including technical facilities and predicted service and interference information, are set forth in the Appendix B to the final order in the DTV Table proceeding, MB Docket No. 87–268 (''DTV Table Appendix B'').) This stringent interference standard, which was used in the channel election process, will minimize as much as possible the chance of harmful interference from analog nightlight service to DTV service. We seek comment on this standard. We also propose to permit a station to cause up to, but no more than, 0.5 percent new interference to a digital station in addition to the interference included in DTV Table Appendix B in areas where there is no station listed as eligible in Appendix A or that would meet the 0.1

percent interference standard. (In this circumstance, an ''area'' means a viewing area, which may be a city, county, community, market, DMA, or other geographic area in which people receive over-the-air television service. Stations seeking to participate under this standard should make their argument and basis for inclusion clear in their STA submission.) We believe that this more-relaxed 0.5 percent interference standard is warranted where necessary to ensure that at least one station will provide the Analog Nightlight service, consistent with the Act's purpose of enabling broadcasters to provide essential public safety announcements and digital television transition information for a short time during the transition. We note that Section 3(1) of the Act requires the Commission to ''take into account market-by-market needs, based upon factors such as channel and transmitter availability.'' We invite comment on whether this provision supports use of a more relaxed 0.5 percent interference standard to determine eligibility in situations where no station can meet our more stringent interference eligibility criteria.

17. The Commission reserves the right to rescind any station's authority to provide analog nightlight service if it interferes with post-transition digital service in a manner that is more harmful than expected and that outweighs the benefit of the time-limited analog nightlight service.

B. Notifications to the Commission of Program Participation

1. Notifications by Pre-Approved Eligible Stations

18. A station listed in Appendix A can be considered pre-approved to participate in the Analog Nightlight program but must notify the Commission of its intent to participate by filing a Legal STA electronically through the Commission's Consolidated Database System (''CDBS'') using the Informal Application filing form. These notifications are necessary so that we can determine where the Analog Nightlight service will be available and also to establish the source of any unanticipated interference to a digital station in the area. Notifications should be filed as soon as possible and must be filed no later than February 10, 2009. A filing fee is normally required for Legal STAs; however, to encourage and hasten participation in the Analog Nightlight program, we will waive the filing fee for timely filed notifications. Because these stations are already determined to be eligible to participate in the program, we will not require an engineering or other showing. We also remind stations choosing to participate in the program to file an update to their Transition Status Report (FCC Form 387). (Stations are responsible for the continuing accuracy and completeness of the information furnished in their Form 387. Whenever the information furnished in their form is no longer substantially accurate and complete in all significant respects, the station must file an updated form as promptly as possible and in any event within 30 days to furnish such additional or corrected information as is appropriate.) We seek comment on this proposal.

19. In light of the extremely short period of time before the transition, we encourage stations to review Appendix A and to notify the Commission during the comment cycle if they intend to participate in the Analog Nightlight program. To ensure that these notifications are properly recorded, stations filings comments should also file a notification through the Legal STA process described above. As noted above, participation is voluntary, but we encourage stations to make these determinations and commitments as quickly as possible. These early indications of participation will facilitate Commission determination of the need to permit additional stations that are not included on the initial list to participate.

2. Requests for Program Participation With Eligibility Showings

20. Stations that are not listed in the final Appendix A to the Report and Order in this proceeding, may nevertheless request to participate in the Analog Nightlight Program by filing an Engineering STA notification electronically through CDBS using the Informal Application filing form. A filing fee is normally required for an Engineering STA; however, to encourage participation in the Analog Nightlight program, we will waive the filing fee for timely filed requests. In addition, to hasten the process and expand the pool of eligible participants, broadcasters whose stations are not listed in Appendix A to this NPRM that believe they are nevertheless eligible to participate may file comments in this proceeding demonstrating their eligibility to participate in the program. To ensure that these requests are properly recorded, stations filing comments should also file a notification through the Engineering STA process. If there are objections to these notifications, they can be filed as reply comments in this docket. We will revise Appendix A as warranted in the Report and Order.

21. To demonstrate eligibility, a station must include an engineering showing demonstrating that the station will cause no more than 0.1% interference, which is the standard the Commission used for the channel election process. This conservative measure of interference will ensure that stations continuing to broadcast an analog signal will not cause harmful interference to digital service. A station may propose to reduce its current analog power in order to remain within this interference level. Alternatively, a station may demonstrate that there is no other station in the area that is eligible to or planning to remain on the air to participate in the Analog Nightlight program and thus justify up to 0.5% interference to digital stations.

22. In order to afford an opportunity for public consideration of these Engineering STA notifications, stations must file no later than February 3, 2009. This timing will allow the Commission, the public and other interested parties an opportunity to review and evaluate these requests. The Media Bureau will announce by public notice those stations that have filed a request to participate in the program. (The public notice will set forth a brief period of time within which an objection based on interference may be filed and will describe the expedited process for filing such objections.) Before February 17, 2009, stations with requests that are not subject to any pending objection will be considered eligible to participate in the program. Nevertheless, participating stations must immediately stop broadcasting Analog Nightlight operations upon any valid complaints of interference to DTV stations or other statutorily protected operations. We also remind stations choosing to participate in the program to file an update to their Transition Status Report (FCC Form 387). We seek comment on this proposed process and the criteria set forth above.

C. Analog License Extension for Participating Stations

23. Television broadcast licenses currently contain the following language concerning analog service:

This is to notify you that your application for license is subject to the condition that on February 17, 2009, or by such other date as the Commission may establish in the future under Section 309(j)(14)(a) and (b) of the Communications Act, the licensee shall surrender either its analog or digital television channel for reallocation or reassignment pursuant to Commission

regulations. The Channel retained by the licensee will be used to broadcast digital television only after this date.

24. The Report and Order in this proceeding will grant a blanket extension of license to broadcasters who participate in the Analog Nightlight program to operate for a period of 30 days after February 17, 2009, *i.e.*, until and including March 19, 2009. We delegate authority to the Media Bureau to issue a public notice just before the transition date announcing those stations that are participating in the Analog Nightlight program. The Media Bureau's Public Notice will establish the right of those licensees whose stations are identified in the public notice to continue to operate their stations in analog on their analog channels solely for the purpose of providing the Analog Nightlight service as described in the Report and Order.

D. Permissible Analog Nightlight Programming

25. Consistent with the explicit language of the Act, we tentatively conclude that nightlight programming may convey only emergency information, as that term is defined in 47 CFR 79.2, and information regarding the digital transition. All such information should be available in both English and Spanish and accessible to persons with disabilities. We also encourage participating stations to provide the information in additional languages where appropriate and beneficial for their viewers. No other programming or advertisements will be permitted. As stated below, we seek comment on these tentative conclusions.

1. Emergency Information

26. Under part 79 of our rules, emergency information is defined as follows:

Information about a current emergency, that is intended to further the protection of life, health, safety, and property, *i.e.*, critical details regarding the emergency and how to respond to the emergency. Examples of the types of emergencies covered include tornadoes, hurricanes, floods, tidal waves, earth quakes, icing conditions, heavy snows, widespread fires, discharge of toxic gases, widespread power failures, industrial explosions, civil disorders, school closings and changes in school bus schedules resulting from such conditions, and warning and watches of impending changes in weather.

27. Thus, in the event of an emergency situation during the 30-day nightlight period, stations may broadcast video and audio concerning such emergencies, including but not limited to a crawl or text describing the emergency, live or taped action regarding the emergency, programming concerning the emergency, and the like. Licensees providing emergency information must make that information accessible to persons with disabilities under 47 CFR 79.2. We also note that the Emergency Alert System (''EAS'') would apply to the Analog Nightlight service to the extent an emergency arises during the 30-day time frame. EAS ''provides the President with the capability to provide immediate communications and information to the general public at the National, State and Local Area levels during periods of national emergency,'' and, in addition, ''may be used to provide the heads of State and local government, or their designated representatives, with a means of emergency communication with the public in their State or Local Area.''

2. Transition Information

28. With respect to the digital television transition, we tentatively conclude that stations airing a nightlight signal may broadcast any information that is relevant to informing viewers about the transition and how they can continue to obtain television service. Examples of the kind of information a station may want to air include, but are not limited to: General information about the transition; information about how viewers can receive digital signals; information about the circumstances related to the DTV transition in the station's market; answers to commonly asked questions and other useful information (*e.g.*, how to re-position an antenna or install a converter box); where viewers can obtain more information about the transition in their local community, including a telephone number and Web site address for the station providing the nightlight service and other stations in the community and any other local sources of transition information and assistance; information about the DTV converter box coupon program; and information or links to other Web sites containing DTV information, including the FCC, National Association of Broadcasters (NAB) and National Telecommunications and Information Administration (NTIA) Web sites. Based on the limitations in the statute, we tentatively conclude that advertisements are not permitted to be included in the Analog Nightlight program. We seek comment on this tentative conclusion.

29. Section 2(b)(2) of the Act provides for the broadcast of information, ''in English and Spanish and accessible to persons with disabilities,'' concerning the digital transition and certain other information. (As noted above, stations are encouraged also to provide information in additional languages that are common among their viewing audiences.) We tentatively conclude that such information may be made available in either open or closed captioning. In addition, as the Act provides, the Analog Nightlight information should include a telephone number and Internet address by which help with the transition may be obtained in both English and Spanish. We seek comment on the specific contact information that stations should provide to consumers. We ask state broadcaster associations to inform us of their plans to have local numbers, or local call centers, available to provide assistance to viewers with questions about local signal reception. In the interim, we encourage broadcasters to make local phone numbers available to the public and, where feasible, establish local call centers.

30. We seek comment on the types of information that may be provided and additional sources for consumers to contact. With regard to the kind of emergency information noted in Section 2(b)(1) of the Act, we note that, pursuant to § 79.2 of our rules, such information must be provided in an accessible visual format, but does not require that it be open or closed captioned. Such information must not only be accessible to individuals who are deaf and hard of hearing, but also to individuals who are blind or have low vision. Pursuant to § 79.2 (b)(ii) and (iii), this is achieved through open aural description (in the case of (ii)) or by the use of an aural tone in (iii) to alert those with vision disabilities that they should turn to a radio or some other source of information. We seek comment on whether these methods are sufficient for purposes of Section 2(b)(2) of the Act. We also invite comment about other ways we can ensure that information is conveyed to people with disabilities.

31. We tentatively conclude that the Analog Nightlight information may be aired using a ''slate'' with text and audio of the text or other DTV information, as well as information, if necessary describing the steps viewers must take to obtain emergency information. Participants in the Analog Nightlight program may also air a video loop with audio, or broadcast live action with audio format, or any combination thereof. (Stations choosing a video loop format may use the FCC's educational video showing how to install a converter box. *See http://www.dtv.gov/video_audio.html*. Additional formats of

the video are available upon request.) We note that during the early transition in Wilmington, NC, stations used a slate to provide nightlight service. NAB has also recently announced that it will produce and distribute a brief DTV educational video that stations can air as part of the Analog Nightlight program.

32. In general we seek comment on these tentative conclusions and proposals regarding nightlight programming and invite commenters to suggest other kinds of information that stations could provide to assist viewers.

IV. Procedural Matters

A. Regulatory Flexibility Act Analysis Not Required

33. We find that no Initial Regulatory Flexibility Analysis (IRFA) is required for this *Notice of Proposed Rulemaking.* As stated above, because of the ''urgent necessity for rapid administrative action under the circumstances,'' we find that there is good cause to dispense with notice and comment requirements under the Administrative Procedure Act. The Analog Nightlight Act imposes a statutory deadline of January 15, 2009, less than one month away, and the Commission has an extraordinarily short time period to meet this deadline: The bill was sent to the President for his signature on December 12, 2008, and it was enacted into law on December 23, 2008. For this reason, we find that an IRFA is not required. Nonetheless, we invited comment from interested parties in order to assist in our development of the Analog Nightlight program.

B. Initial Paperwork Reduction Act of 1995 Analysis

34. This Notice of Proposed Rulemaking was analyzed with respect to the Paperwork Reduction Act of 1995 (''PRA''), Public Law 104–13, 109 Stat 163 (1995) (codified in Chapter 35 of Title 44 U.S.C.), and contains a modified information collection requirement. The Commission will seek approval under the PRA under OMB's emergency processing rules for these information collections in order to implement the Congressional mandate for the FCC to develop and implement a program by January 15, 2009, to encourage and permit TV broadcast stations to use this opportunity to provide public safety information and DTV transition information. We believe there is good cause for requesting emergency PRA approval from OMB because of the January 15, 2009 statutory deadline for implementing the Nightlight Act, which was enacted by Congress only this month, as well as the brief 30-day period during which the Act's provisions will be in force, circumstances which make the use of normal OMB clearance procedures reasonably likely to cause the Act's statutory deadlines to be missed. In addition, any delay in implementing this Congressional mandate can result in harm to TV stations, and, in turn, to their viewers. (Due to the short time frame provided for us to act in the Analog Nightlight Act, we will ask OMB to waive **Federal Register** notice for this emergency request under the PRA. *See* 5 CFR 1320.13(d).) For additional information concerning the PRA proposed information collection requirements contained in this *NPRM,* contact Cathy Williams at 202–418–2918, or via the Internet to *Cathy.Williams@fcc.gov.*

C. Ex Parte Rules

35. *Permit-But-Disclose.* This proceeding will be treated as a ''permit-but-disclose'' proceeding subject to the ''permit-but-disclose'' requirements under section 1.1206(b) of the Commission's rules. *Ex parte* presentations are permissible if disclosed in accordance with Commission rules, except during the Sunshine Agenda period when presentations, *ex parte* or otherwise, are generally prohibited. Persons making oral *ex parte* presentations are reminded that a memorandum summarizing a presentation must contain a summary of the substance of the presentation and not merely a listing of the subjects discussed. More than a one- or two-sentence description of the views and arguments presented is generally required. Additional rules pertaining to oral and written presentations are set forth in section 1.1206(b).

D. Filing Requirements

36. *Comments and Replies.* Pursuant to Sections 1.415 and 1.419 of the Commission's rules, interested parties may file comments and reply comments on or before the dates indicated on the first page of this document. Comments may be filed using: (1) The Commission's Electronic Comment Filing System (''ECFS''), (2) the Federal Government's eRulemaking Portal, or (3) by filing paper copies.

37. *Electronic Filers:* Comments may be filed electronically using the Internet by accessing the ECFS: *http://www.fcc.gov/cgb/ecfs/* or the Federal eRulemaking Portal: *http://www.regulations.gov.* Filers should follow the instructions provided on the Web site for submitting comments. For ECFS filers, in completing the transmittal screen, filers should include their full name, U.S. Postal Service mailing address, and the applicable docket or rulemaking number. Parties may also submit an electronic comment by Internet e-mail. To get filing instructions, filers should send an e-mail to *ecfs@fcc.gov,* and include the following words in the body of the message, ''get form.'' A sample form and directions will be sent in response.

38. *Paper Filers:* Parties who choose to file by paper must file an original and four copies of each filing. Filings can be sent by hand or messenger delivery, by commercial overnight courier, or by first-class or overnight U.S. Postal Service mail (although we continue to experience delays in receiving U.S. Postal Service mail). All filings must be addressed to the Commission's Secretary, Office of the Secretary, Federal Communications Commission.

39. The Commission's contractor will receive hand-delivered or messenger-delivered paper filings for the Commission's Secretary at 236 Massachusetts Avenue, NE., Suite 110, Washington, DC 20002. The filing hours at this location are 8 a.m. to 7 p.m. All hand deliveries must be held together with rubber bands or fasteners. Any envelopes must be disposed of before entering the building.

40. Commercial overnight mail (other than U.S. Postal Service Express Mail and Priority Mail) must be sent to 9300 East Hampton Drive, Capitol Heights, MD 20743.

41. U.S. Postal Service first-class, Express, and Priority mail should be addressed to 445 12th Street, SW., Washington, DC 20554.

42. *Availability of Documents.* Comments, reply comments, and *ex parte* submissions will be available for public inspection during regular business hours in the FCC Reference Center, Federal Communications Commission, 445 12th Street, SW., CY–A257, Washington, DC 20554. These documents will also be available via ECFS. Documents will be available electronically in ASCII, Word 97, and/or Adobe Acrobat.

43. *People with Disabilities:* To request materials in accessible formats for people with disabilities (braille, large print, electronic files, audio format), send an e-mail to *fcc504@fcc.gov* or call the Consumer & Governmental Affairs Bureau at 202–418–0530 (voice), 202–418–0432 (tty).

44. *Additional Information.* For additional information on this proceeding, contact Kim Matthews, *Kim.Matthews@fcc.gov,* or Evan Baranoff, *Evan.Baranoff@fcc.gov,* or Eloise Gore, *Eloise.Gore@fcc.gov,* of the Media Bureau, Policy Division, (202)

418–2120; Gordon Godfrey, *Gordon.Godfrey@fcc.gov,* of the Media Bureau, Engineering Division, (202) 418–7000; Nazifa Sawez, *Nazifa.Sawez@fcc.gov,* of the Media Bureau, Video Division, (202) 418–1600; or Alan Stillwell, *Alan.Stillwell@fcc.gov,* of the Office of Engineering and Technology, (202) 418–2470.

V. Ordering Clauses

45. Accordingly, *it is ordered* that, pursuant to Sections 1, 4(i), 303(r), 316, and 336 of the Communications Act of 1934, 47 U.S.C. 151, 154(i), 303(r), 316, and 336, and the Short-term Analog Flash and Emergency Readiness Act of 2008, *notice is hereby given* of the proposals and tentative conclusions described in this *Notice of Proposed Rulemaking.*

46. *It is further ordered* that the Reference Information Center, Consumer Information Bureau, shall send a copy of this Notice of Proposed Rulemaking, including the Initial Regulatory Flexibility Analysis, to the Chief Counsel for Advocacy of the Small Business Administration.

Federal Communications Commission.

William F. Caton,

Deputy Secretary.

Appendix A: Initial List of Stations Eligible for Analog Nightlight Program

Market	Facility ID	Call sign	City	ST	Anlg Ch.	Post transition DTV Ch.	Pre transition DTV Ch. (*)	Status of analog
Anchorage, AK	804	KAKM	Anchorage	AK	7	8		
Anchorage, AK	13815	KIMO	Anchorage	AK	13	12		
Anchorage, AK	10173	KTUU–TV	Anchorage	AK	2	10		
Anchorage, AK	4983	KYUK–TV	Bethel	AK	4	3		
Fairbanks, AK	13813	KATN	Fairbanks	AK	2	18		
Fairbanks, AK	20015	KJNP–TV	North Pole	AK	4	20		
Fairbanks, AK	49621	KTVF	Fairbanks	AK	11	26		
Fairbanks, AK	69315	KUAC–TV	Fairbanks	AK	9	9	24	
Juneau, AK	8651	KTOO–TV	Juneau	AK	3	10		
Juneau, AK	60520	KUBD	Ketchikan	AK	4	13		
Birmingham, AL	71325	WDBB	Bessemer	AL	17	18		
Dothan, AL	43846	WDHN	Dothan	AL	18	21		
Huntsville-Decatur-Florence, AL.	57292	WAAY–TV	Huntsville	AL	31	32		
Montgomery, AL	714	WDIQ	Dozier	AL	2	10		
Ft. Smith-Fayetteville-Springdale-Rogers, AR.	66469	KFSM–TV	Fort Smith	AR	5	18		
Ft. Smith-Fayetteville-Springdale-Rogers, AR.	60354	KHOG–TV	Fayetteville	AR	29	15		
Little Rock-Pine Bluff, AR.	33440	KARK–TV	Little Rock	AR	4	32		
Little Rock-Pine Bluff, AR.	2770	KETS	Little Rock	AR	2	7		Terminating 1/3/09.
Little Rock-Pine Bluff, AR.	11951	KLRT–TV	Little Rock	AR	16	30		
Little Rock-Pine Bluff, AR.	37005	KWBF	Little Rock	AR	42	44		Reduced 10/31/08.
Phoenix, AZ	41223	KPHO–TV	Phoenix	AZ	5	17		
Phoenix, AZ	40993	KTVK	Phoenix	AZ	3	24		
Phoenix, AZ	68886	KUTP	Phoenix	AZ	45	26		
Tucson, AZ	81441	KFTU–TV	Douglas	AZ	3	36		
Tucson, AZ	30601	KHRR	Tucson	AZ	40	40	42	
Tucson, AZ	2731	KUAT–TV	Tucson	AZ	6	30		
Tucson, AZ	25735	KVOA	Tucson	AZ	4	23		
Eureka, CA	8263	KAEF	Arcata	CA	23	22		
Fresno-Visalia, CA	51488	KMPH–TV	Visalia	CA	26	28		
Fresno-Visalia, CA	35594	KSEE	Fresno	CA	24	38		
Los Angeles, CA	47906	KNBC	Los Angeles	CA	4	36		
Los Angeles, CA	35670	KTLA	Los Angeles	CA	5	31		
Los Angeles, CA	26231	KWHY–TV	Los Angeles	CA	22	42		
Sacramento-Stockton-Modesto, CA.	33875	KCRA–TV	Sacramento	CA	3	35		
San Diego, CA	6124	KPBS	San Diego	CA	15	30		
San Francisco-Oakland-San Jose, CA.	65526	KRON–TV	San Francisco	CA	4	38		
San Francisco-Oakland-San Jose, CA.	35703	KTVU	Oakland	CA	2	44		
Santa Barbara-Santa Maria-San Luis Obispo, CA.	63165	KCOY–TV	Santa Maria	CA	12	19		
Santa Barbara-Santa Maria-San Luis Obispo, CA.	60637	KEYT–TV	Santa Barbara	CA	3	27		

Market	Facility ID	Call sign	City	ST	Anlg Ch.	Post transition DTV Ch.	Pre transition DTV Ch. (*)	Status of analog
Santa Barbara-Santa Maria-San Luis Obispo, CA.	19654	KSBY	San Luis Obispo	CA	6	15		
Yuma, AZ-El Centro, CA	36170	KVYE	El Centro	CA	7	22		
Albuquerque-Santa Fe, NM.	48589	KREZ–TV	Durango	CO	6	15		
Colorado Springs-Pueblo, CO.	59014	KOAA–TV	Pueblo	CO	5	42		
Denver, CO	63158	KCDO	Sterling	CO	3	23		
Denver, CO	24514	KCEC	Denver	CO	50	51		
Denver, CO	47903	KCNC–TV	Denver	CO	4	35		
Grand Junction-Montrose, CO.	31597	KFQX	Grand Junction	CO	4	15		
Grand Junction-Montrose, CO.	70596	KREX–TV	Grand Junction	CO	5	2		
Hartford-New Haven, CT	53115	WFSB	Hartford	CT	3	33		
Washington, DC	47904	WRC–TV	Washington	DC	4	48		
Gainesville, FL	69440	WUFT	Gainesville	FL	5	36		
Jacksonville, FL	53116	WJXT	Jacksonville	FL	4	42		
Miami-Ft. Lauderdale, FL.	47902	WFOR–TV	Miami	FL	4	22		
Miami-Ft. Lauderdale, FL.	13456	WPBT	Miami	FL	2	18		
Miami-Ft. Lauderdale, FL.	64971	WSCV	Fort Lauderdale	FL	51	30		
Orlando-Daytona Beach-Melbourne, FL.	25738	WESH	Daytona Beach	FL	2	11		
Orlando-Daytona Beach-Melbourne, FL.	53465	WKCF	Clermont	FL	18	17		
Panama City, FL	2942	WPGX	Panama City	FL	28	9		
Tampa-St. Petersburg-Sarasota, FL.	21808	WEDU	Tampa	FL	3	13		Reduced 7/1/08.
West Palm Beach-Ft. Pierce, FL.	59443	WPTV	West Palm Beach	FL	5	12		Reduced 7/24/08.
Atlanta, GA	70689	WAGA	Atlanta	GA	5	27		
Atlanta, GA	23960	WSB–TV	Atlanta	GA	2	39		
Augusta, GA	70699	WAGT	Augusta	GA	26	30		
Macon, GA	23935	WMUM–TV	Cochran	GA	29	7		
Savannah, GA	48662	WSAV–TV	Savannah	GA	3	39		
Honolulu, HI	65395	KBFD	Honolulu	HI	32	33		Reduced 5/15/08 and Terminating 1/15/09.
Honolulu, HI	34445	KFVE	Honolulu	HI	5	23		
Honolulu, HI	36917	KGMB	Honolulu	HI	9	22		Terminating 1/15/09.
Honolulu, HI	36920	KGMV	Wailuku	HI	3	24		Terminating 1/15/09.
Honolulu, HI	34846	KHBC–TV	Hilo	HI	2	22		Terminating 1/15/09.
Honolulu, HI	34867	KHNL	Honolulu	HI	13	35		Terminating 1/15/09.
Honolulu, HI	4144	KHON–TV	Honolulu	HI	2	8		Terminating 1/15/09.
Honolulu, HI	34527	KIKU	Honolulu	HI	20	19		Terminating 1/15/09.
Honolulu, HI	64548	KITV	Honolulu	HI	4	40		
Cedar Rapids-Waterloo-Iowa City-Dubuque, IA.	35336	KFXA	Cedar Rapids	IA	28	27		
Cedar Rapids-Waterloo-Iowa City-Dubuque, IA.	29025	KIIN	Iowa City	IA	12	12	45	
Des Moines-Ames, IA	29100	KTIN	Fort Dodge	IA	21	25		
Rochester-Austin, MN-Mason City, IA.	66402	KIMT	Mason City	IA	3	42		
Rochester-Austin, MN-Mason City, IA.	29086	KYIN	Mason City	IA	24	18		
Boise, ID	49760	KBCI–TV	Boise	ID	2	28		
Boise, ID	59363	KNIN–TV	Caldwell	ID	9	10		
Boise, ID	28230	KTRV–TV	Nampa	ID	12	13		
Spokane, WA	56032	KLEW–TV	Lewiston	ID	3	32		
Twin Falls, ID	1255	KXTF	Twin Falls	ID	35	34		
Champaign-Springfield-Decatur, IL.	42124	WCIA	Champaign	IL	3	48		
Chicago, IL	9617	WBBM–TV	Chicago	IL	2	12		
Paducah, KY-Cape Girardeau, MO-Harrisburg-Mt. Vernon, IL.	73999	WSIL–TV	Harrisburg	IL	3	34		
Ft. Wayne, IN	39270	WANE–TV	Fort Wayne	IN	15	31		
Indianapolis, IN	40877	WRTV	Indianapolis	IN	6	25		

Market	Facility ID	Call sign	City	ST	Anlg Ch.	Post transition DTV Ch.	Pre transition DTV Ch. (*)	Status of analog
Indianapolis, IN	56523	WTTV	Bloomington	IN	4	48		
Terre Haute, IN	20426	WTWO	Terre Haute	IN	2	36		Terminated 12/1/08.
Wichita-Hutchinson, KS	72359	KSNC	Great Bend	KS	2	22		
Wichita-Hutchinson, KS	72358	KSNW	Wichita	KS	3	45		
Wichita-Hutchinson, KS	60683	KSWK	Lakin	KS	3	8		
Wichita-Hutchinson, KS	66413	KWCH–TV	Huchinson	KS	12	12	19	
Charleston-Huntington, WV.	34171	WKAS	Ashland	KY	25	26		
Louisville, KY	13989	WAVE	Louisville	KY	3	47		
Alexandria, LA	51598	KALB–TV	Alexandria	LA	5	35		
Baton Rouge, LA	38616	WBRZ–TV	Baton Rouge	LA	2	13		
Lafayette, LA	33471	KATC	Lafayette	LA	3	28		
New Orleans, LA	71357	WDSU	New Orleans	LA	6	43		
New Orleans, LA	18819	WLAE–TV	New Orleans	LA	32	31		
New Orleans, LA	54280	WNOL–TV	New Orleans	LA	38	15		
New Orleans, LA	74192	WWL–TV	New Orleans	LA	4	36		
Shreveport, LA	73706	KSHV	Shreveport	LA	45	44		
Shreveport, LA	35652	KTBS–TV	Shreveport	LA	3	28		
Boston, MA	25456	WBZ–TV	Boston	MA	4	30		
Boston, MA	65684	WCVB–TV	Boston	MA	5	20		
Boston, MA	72099	WGBH–TV	Boston	MA	2	19		
Baltimore, MD	59442	WMAR–TV	Baltimore	MD	2	38		
Bangor, ME	17005	WABI–TV	Bangor	ME	5	12		
Bangor, ME	39644	WLBZ	Bangor	ME	2	2	25	
Detroit, MI	73123	WJBK	Detroit	MI	2	7		
Flint-Saginaw-Bay City, MI.	72052	WEYI–TV	Saginaw	MI	25	30		
Grand Rapids-Kalamazoo-Battle Creek, MI.	74195	WWMT	Kalamazoo	MI	3	8		
Marquette, MI	9630	WJMN–TV	Escanaba	MI	3	48		
Traverse City-Cadillac, MI.	21254	WTOM–TV	Cheboygan	MI	4	35		
Duluth, MN-Superior, WI	4691	KDLH	Duluth	MN	3	33		
Duluth, MN-Superior, WI	35525	KQDS–TV	Duluth	MN	21	17		
Minneapolis-St. Paul, MN.	35843	KSTC–TV	St. Paul	MN	45	45	44	
Minneapolis-St. Paul, MN.	28010	KSTP–TV	St. Paul	MN	5	35		
Minneapolis-St. Paul, MN.	68594	KTCA–TV	St. Paul	MN	2	34		
Minneapolis-St. Paul, MN.	36395	WUCW	Minneapolis	MN	23	22		
Rochester-Austin, MN-Mason City, IA.	18285	KAAL	Austin	MN	6	36		
Columbia-Jefferson City, MO.	4326	KMOS–TV	Sedalia	MO	6	15		
Kansas City, MO–KS	65686	KMBC–TV	Kansas City	MO	9	29		
Kansas City, MO–KS	33337	KPXE	Kansas City	MO	50	51		
Kansas City, MO–KS	59444	KSHB–TV	Kansas City	MO	41	42		
Ottumwa, IA-Kirksville, MO.	21251	KTVO	Kirksville	MO	3	33		
Springfield, MO	36003	KYTV	Springfield	MO	3	44		
St. Joseph, MO	20427	KQTV	St. Joseph	MO	2	7		
St. Louis, MO	46981	KSDK	St. Louis	MO	5	35		
St. Louis, MO	35693	KTVI	St. Louis	MO	2	43		
Columbus-Tupelo-West Point, MS.	12477	WCBI–TV	Columbus	MS	4	35		
Columbus-Tupelo-West Point, MS.	37732	WLOV–TV	West Point	MS	27	16		
Columbus-Tupelo-West Point, MS.	43192	WMAB–TV	Mississippi State	MS	2	10		
Jackson, MS	68542	WLBT	Jackson	MS	3	7		
Jackson, MS	43184	WMAU–TV	Bude	MS	17	18		Reduced 8/7/08
Jackson, MS	43168	WMPN–TV	Jackson	MS	29	20		
Meridian, MS	43169	WMAW–TV	Meridian	MS	14	44		Reduced 8/7/08.
Billings, MT	47670	KHMT	Hardin	MT	4	22		
Butte-Bozeman, MT	43567	KUSM	Bozeman	MT	9	8		
Butte-Bozeman, MT	14674	KWYB	Butte	MT	18	19		
Great Falls, MT	35567	KRTV	Great Falls	MT	3	7		
Great Falls, MT	13792	KTGF	Great Falls	MT	16	45		
Charlotte, NC	30826	WBTV	Charlotte	NC	3	23		

Market	Facility ID	Call sign	City	ST	Anlg Ch.	Post transition DTV Ch.	Pre transition DTV Ch. (*)	Status of analog
Greensboro-High Point-Winston Salem, NC.	72064	WFMY–TV	Greensboro	NC	2	51		
Norfolk-Portsmouth-Newport News, VA.	69292	WUND–TV	Edenton	NC	2	20		
Wilmington, NC	48666	WECT	Wilmington	NC	6	44		Terminated 9/30/08.
Wilmington, NC	72871	WSFX–TV	Wilmington	NC	26	30		Terminated 9/30/08.
Wilmington, NC	12033	WWAY	Wilmington	NC	3	46		Terminated 9/30/08.
Fargo-Valley City, ND	53320	KGFE	Grand Forks	ND	2	15		
Fargo-Valley City, ND	49134	KXJB–TV	Valley City	ND	4	38		
Minot-Bismarck-Dickinson, ND.	53313	KSRE	Minot	ND	6	40		
Cheyenne, WY-Scottsbluff, NE.	17683	KDUH–TV	Scottsbluff	NE	4	7		
Omaha, NE	35190	KMTV	Omaha	NE	3	45		
Omaha, NE	23277	KXVO	Omaha	NE	15	38		
Omaha, NE	47974	KYNE–TV	Omaha	NE	26	17		
Omaha, NE	65528	WOWT–TV	Omaha	NE	6	22		
Albuquerque-Santa Fe, NM.	32311	KASA–TV	Santa Fe	NM	2	27		
Albuquerque-Santa Fe, NM.	55049	KASY–TV	Albuquerque	NM	50	45		
Albuquerque-Santa Fe, NM.	1151	KAZQ	Albuquerque	NM	32	17		
Albuquerque-Santa Fe, NM.	35084	KLUZ–TV	Albuquerque	NM	41	42		
Albuquerque-Santa Fe, NM.	993	KNAT–TV	Albuquerque	NM	23	24		
Albuquerque-Santa Fe, NM.	55528	KNME–TV	Albuquerque	NM	5	35		
Albuquerque-Santa Fe, NM.	85114	KOBG–TV	Silver City	NM	6	12		
Albuquerque-Santa Fe, NM.	35313	KOB–TV	Albuquerque	NM	4	26		
Albuquerque-Santa Fe, NM.	53908	KOCT	Carlsbad	NM	6	19		
Albuquerque-Santa Fe, NM.	76268	KWBQ	Santa Fe	NM	19	29		
Amarillo, TX	18338	KENW	Portales	NM	3	32		
Las Vegas, NV	63768	KBLR	Paradise	NV	39	40		Reduced 11/17/08.
Las Vegas, NV	11683	KLVX	Las Vegas	NV	10	11		Reduced 10/31/08.
Las Vegas, NV	41237	KMCC	Laughlin	NV	34	32		
Las Vegas, NV	10179	KVMY	Las Vegas	NV	21	22		
Las Vegas, NV	35870	KVVU–TV	Henderson	NV	5	9		
Reno, NV	10228	KNPB	Reno	NV	5	15		
Reno, NV	51493	KREN–TV	Reno	NV	27	26		
Reno, NV	60307	KRNV	Reno	NV	4	7		
Reno, NV	59139	KTVN	Reno	NV	2	13		
Buffalo, NY	64547	WGRZ–TV	Buffalo	NY	2	33		
Buffalo, NY	7780	WIVB–TV	Buffalo	NY	4	39		
Buffalo, NY	67784	WNYO–TV	Buffalo	NY	49	34		
Buffalo, NY	2325	WPXJ–TV	Batavia	NY	51	23		Reduced 10/30/08.
Burlington, VT-Plattsburgh, NY.	57476	WPTZ	North Pole	NY	5	14		
New York, NY	9610	WCBS–TV	New York	NY	2	33		
Syracuse, NY	21252	WSTM–TV	Syracuse	NY	3	24		
Syracuse, NY	74151	WTVH	Syracuse	NY	5	47		
Utica, NY	60654	WKTV	Utica	NY	2	29		
Cleveland-Akron, OH	73195	WKYC–TV	Cleveland	OH	3	17		
Columbus, OH	50781	WCMH–TV	Columbus	OH	4	14		
Columbus, OH	56549	WSYX	Columbus	OH	6	48		
Dayton, OH	65690	WDTN	Dayton	OH	2	50		
Zanesville, OH	61216	WHIZ–TV	Zanesville	OH	18	40		
Oklahoma City, OK	50182	KAUT–TV	Oklahoma City	OK	43	40		
Oklahoma City, OK	66222	KFOR–TV	Oklahoma City	OK	4	27		
Oklahoma City, OK	50170	KOCB	Oklahoma City	OK	34	33		
Oklahoma City, OK	12508	KOCO–TV	Oklahoma City	OK	5	7		
Oklahoma City, OK	35388	KOKH–TV	Oklahoma City	OK	25	24		
Oklahoma City, OK	50194	KWET	Cheyenne	OK	12	8		
Tulsa, OK	59439	KJRH	Tulsa	OK	2	8		Reduced 12/1/08.
Tulsa, OK	54420	KMYT–TV	Tulsa	OK	41	42		
Tulsa, OK	50198	KOET	Eufaula	OK	3	31		
Tulsa, OK	35434	KOTV	Tulsa	OK	6	45		Reduced 12/1/08.

Market	Facility ID	Call sign	City	ST	Anlg Ch.	Post transition DTV Ch.	Pre transition DTV Ch. (*)	Status of analog
Bend, OR	50588	KOAB–TV	Bend	OR	3	11		
Eugene, OR	8322	KLSR–TV	Eugene	OR	34	31		
Eugene, OR	35189	KMTR	Eugene	OR	16	17		
Eugene, OR	31437	KTVC	Roseburg	OR	36	18		
Medford-Klamath Falls, OR.	8284	KOTI	Klamath Falls	OR	2	13		
Portland, OR	21649	KATU	Portland	OR	2	43		
Portland, OR	47707	KNMT	Portland	OR	24	45		
Johnstown-Altoona, PA	73120	WJAC–TV	Johnstown	PA	6	34		
Johnstown-Altoona, PA	66219	WPSU–TV	Clearfield	PA	3	15		
Philadelphia, PA	25453	KYW–TV	Philadelphia	PA	3	26		
Pittsburgh, PA	25454	KDKA–TV	Pittsburgh	PA	2	25		
Puerto Rico	52073	WAPA–TV	San Juan	PR	4	27		
Puerto Rico	53863	WIPM–TV	Mayaguez	PR	3	35		
Puerto Rico	64983	WKAQ–TV	San Juan	PR	2	28		
Puerto Rico	64865	WORA–TV	Mayaguez	PR	5	29		
Charleston, SC	10587	WCBD–TV	Charleston	SC	2	50		
Charleston, SC	21536	WCIV	Charleston	SC	4	34		
Charleston, SC	71297	WCSC–TV	Charleston	SC	5	47		
Rapid City, SD	41969	KCLO–TV	Rapid City	SD	15	16		
Rapid City, SD	17686	KHSD–TV	Lead	SD	11	10		
Sioux Falls-Mitchell, SD	60728	KCSD–TV	Sioux Falls	SD	23	24		
Sioux Falls-Mitchell, SD	55379	KDLT–TV	Sioux Falls	SD	46	47		
Sioux Falls-Mitchell, SD	55375	KDLV–TV	Mitchell	SD	5	26		
Sioux Falls-Mitchell, SD	61064	KDSD–TV	Aberdeen	SD	16	17		
Sioux Falls-Mitchell, SD	41964	KPLO–TV	Reliance	SD	6	13		
Sioux Falls-Mitchell, SD	48660	KPRY–TV	Pierre	SD	4	19		
Sioux Falls-Mitchell, SD	61072	KUSD–TV	Vermillion	SD	2	34		
Sioux Falls-Mitchell, SD	29121	KWSD	Sioux Falls	SD	36	36	51	
Chattanooga, TN	59137	WRCB–TV	Chattanooga	TN	3	13		
Knoxville, TN	18252	WETP–TV	Sneedville	TN	2	41		
Memphis, TN	21726	WPXX–TV	Memphis	TN	50	51		
Memphis, TN	66174	WREG–TV	Memphis	TN	3	28		
Nashville, TN	73188	WKRN–TV	Nashville	TN	2	27		
Nashville, TN	60820	WPGD–TV	Hendersonville	TN	50	33		
Amarillo, TX	1236	KACV–TV	Amarillo	TX	2	8		Reduced 11/30/08.
Amarillo, TX	8523	KAMR–TV	Amarillo	TX	4	19		
Amarillo, TX	33722	KCIT	Amarillo	TX	14	15		Reduced 7/1/08.
Beaumont-Port Arthur, TX.	61214	KBTV–TV	Port Arthur	TX	4	40		
Corpus Christi, TX	10188	KIII	Corpus Christi	TX	3	8		
Corpus Christi, TX	64877	KORO	Corpus Christi	TX	28	27		
Corpus Christi, TX	25559	KRIS–TV	Corpus Christi	TX	6	13		
Dallas-Ft. Worth, TX	33770	KDFW	Dallas	TX	4	35		
Dallas-Ft. Worth, TX	49326	KDTN	Denton	TX	2	43		
El Paso, TX	33764	KDBC–TV	El Paso	TX	4	18		
El Paso, TX	51708	KINT–TV	El Paso	TX	26	25		
El Paso, TX	10202	KSCE	El Paso	TX	38	39		
Harlingen-Weslaco-Brownsville-McAllen, TX.	34457	KGBT–TV	Harlingen	TX	4	31		
Harlingen-Weslaco-Brownsville-McAllen, TX.	12913	KLUJ–TV	Harlingen	TX	44	34		
Harlingen-Weslaco-Brownsville-McAllen, TX.	43328	KRGV–TV	Weslaco	TX	5	13		
Houston, TX	53117	KPRC–TV	Houston	TX	2	35		
Houston, TX	64984	KTMD	Galveston	TX	47	48		
Lubbock, TX	40820	KAMC	Lubbock	TX	28	27		
Lubbock, TX	77719	KLCW–TV	Wolfforth	TX	22	43		Terminated 10/1/08.
Lubbock, TX	65355	KTXT–TV	Lubbock	TX	5	39		
Odessa-Midland, TX	35131	KMID	Midland	TX	2	26		
Odessa-Midland, TX	50044	KPBT–TV	Odessa	TX	36	38		
Odessa-Midland, TX	42008	KWAB–TV	Big Spring	TX	4	33		
San Angelo, TX	58560	KIDY	San Angelo	TX	6	19		
San Angelo, TX	31114	KLST	San Angelo	TX	8	11		
San Angelo, TX	307	KSAN–TV	San Angelo	TX	3	16		
San Antonio, TX	24316	KCWX	Fredericksburg	TX	2	5		Reduced 12/15/08.
San Antonio, TX	51518	KMYS	Kerrville	TX	35	32		
San Antonio, TX	55762	KTRG	Del Rio	TX	10	28		
Victoria, TX	73101	KAVU–TV	Victoria	TX	25	15		

Market	Facility ID	Call sign	City	ST	Anlg Ch.	Post transition DTV Ch.	Pre transition DTV Ch. (*)	Status of analog
Wichita Falls, TX-Lawton, OK.	6864	KAUZ–TV	Wichita Falls	TX	6	22		
Wichita Falls, TX-Lawton, OK.	65370	KFDX–TV	Wichita Falls	TX	3	28		
Wichita Falls, TX-Lawton, OK.	7675	KJTL	Wichita Falls	TX	18	15		
Salt Lake City, UT	59494	KCSG	Cedar City	UT	4	14		
Salt Lake City, UT	36607	KJZZ–TV	Salt Lake City	UT	14	46		
Salt Lake City, UT	6359	KSL–TV	Salt Lake City	UT	5	38		
Salt Lake City, UT	68889	KTVX	Salt Lake City	UT	4	40		
Salt Lake City, UT	69396	KUED	Salt Lake City	UT	7	42		
Salt Lake City, UT	69582	KUEN	Ogden	UT	9	36		
Salt Lake City, UT	35822	KUSG	St. George	UT	12	9		
Harrisonburg, VA	4688	WHSV–TV	Harrisonburg	VA	3	49		
Norfolk-Portsmouth-Newport News, VA.	47401	WTKR	Norfolk	VA	3	40		
Richmond-Petersburg, VA.	74416	WRIC–TV	Petersburg	VA	8	22		
U.S. Virgin Islands	2370	WSVI	Christiansted	VI	8	20		
Burlington, VT-Plattsburgh, NY.	46728	WCAX–TV	Burlington	VT	3	22		
Burlington, VT-Plattsburgh, NY.	69946	WVER	Rutland	VT	28	9		
Portland, OR	35460	KPDX	Vancouver	WA	49	30		
Seattle-Tacoma, WA	34847	KING–TV	Seattle	WA	5	48		
Seattle-Tacoma, WA	66781	KIRO–TV	Seattle	WA	7	39		
Seattle-Tacoma, WA	21656	KOMO–TV	Seattle	WA	4	38		
Spokane, WA	58684	KAYU–TV	Spokane	WA	28	28		Reduced 10/31/08.
Spokane, WA	34868	KREM–TV	Spokane	WA	2	20		
Spokane, WA	35606	KSKN	Spokane	WA	22	36		
Spokane, WA	61978	KXLY–TV	Spokane	WA	4	13		
Yakima-Pasco-Richland-Kennewick, WA.	56029	KEPR–TV	Pasco	WA	19	18		
Yakima-Pasco-Richland-Kennewick, WA.	56033	KIMA–TV	Yakima	WA	29	33		
Yakima-Pasco-Richland-Kennewick, WA.	12395	KNDO	Yakima	WA	23	16		
Yakima-Pasco-Richland-Kennewick, WA.	12427	KNDU	Richland	WA	25	26		
Yakima-Pasco-Richland-Kennewick, WA.	71023	KTNW	Richland	WA	31	38		
Yakima-Pasco-Richland-Kennewick, WA.	33752	KYVE	Yakima	WA	47	21		
Duluth, MN-Superior, WI	33658	KBJR–TV	Superior	WI	6	19		
Green Bay-Appleton, WI	74417	WBAY–TV	Green Bay	WI	2	23		
Green Bay-Appleton, WI	73042	WIWB	Suring	WI	14	21		
Madison, WI	65143	WISC–TV	Madison	WI	3	50		
Milwaukee, WI	72342	WVCY–TV	Milwaukee	WI	30	22		
Wausau-Rhinelander, WI	81503	WBIJ	Crandon	WI	4	12		
Bluefield-Beckley-Oak Hill, WV.	66804	WOAY–TV	Oak Hill	WV	4	50		
Charleston-Huntington, WV.	36912	WSAZ–TV	Huntington	WV	3	23		
Casper-Riverton, WY	10036	KCWC–TV	Lander	WY	4	8		
Casper-Riverton, WY	63162	KGWL–TV	Lander	WY	5	7		
Casper-Riverton, WY	82575	KPTW	Casper	WY	6	8		
Cheyenne, WY-Scottsbluff, NE.	63166	KGWN–TV	Cheyenne	WY	5	30		
Cheyenne, WY-Scottsbluff, NE.	18287	KQCK	Cheyenne	WY	33	11		

(*): Stations with their pre-transition DTV channel listed have requested permission to remain on their pre-transition DTV channel after the February 17, 2009 transition date pursuant to the Commission's ''phased transition'' relief provisions.

Appendix B: List of DMAs Indicating Presence of Stations Initially Eligible for Nightlight Participation

	DMA name	State	Covered markets	DMA rank
1.	Anchorage	AK	x	154
2.	Fairbanks	AK	x	202
3.	Juneau, AK	AK	x	207
4.	Birmingham (Ann and Tusc)	AL	x	40
5.	Dothan	AL	x	172
6.	Huntsville-Decatur (Flor)	AL	x	84
7.	Montgomery-Selma	AL	x	117
8.	Mobile (AL)-Pensacola (Ft Walt) (FL)	AL/FL		59
9.	Ft. Smith-Fay-Sprngdl-Rgrs	AR	x	102
10.	Jonesboro	AR		180
11.	Little Rock-Pine Bluff	AR	x	57
12.	Phoenix (Prescott), AZ	AZ	x	13
13.	Tucson (Sierra Vista)	AZ	x	70
14.	Yuma (AZ)-El Centro (CA)	AZ/CA	x	167
15.	Bakersfield	CA		126
16.	Chico-Redding	CA		130
17.	Eureka	CA	x	193
18.	Fresno-Visalia	CA	x	55
19.	Los Angeles	CA	x	2
20.	Monterey-Salinas	CA		124
21.	Palm Springs	CA		149
22.	Sacramnto-Stktn-Modesto	CA	x	20
23.	San Diego	CA	x	27
24.	San Francisco-Oak-San Jose	CA	x	5
25.	SantaBarbra-SanMar-SanLuOb	CA	x	122
26.	Colorado Springs-Pueblo	CO	x	94
27.	Denver	CO	x	18
28.	Grand Junction-Montrose	CO	x	186
29.	Hartford & New Haven	CT	x	28
30.	Washington, DC (Hagerstown)	DC/MD	x	8
31.	Ft. Myers-Naples	FL		64
32.	Gainesville	FL	x	162
33.	Jacksonville, Brunswick	FL	x	50
34.	Miami-Ft. Lauderdale	FL	x	16
35.	Orlando-Daytona Bch-Melbrn	FL	x	19
36.	Panama City	FL	x	156
37.	Tampa-St. Pete (Sarasota)	FL	x	12
38.	West Palm Beach-Ft. Pierce	FL	x	38
39.	Tallahassee (FL)-Thomasville (GA)	FL/GA		108
40.	Albany, GA	GA		145
41.	Atlanta	GA	x	9
42.	Augusta	GA	x	114
43.	Columbus, GA	GA		128
44.	Macon	GA	x	121
45.	Savannah	GA	x	97
46.	Honolulu	HI	x	72
47.	Cedar Rapids-Wtrlo-IWC & Dub	IA	x	89
48.	Des Moines-Ames	IA	x	73
49.	Sioux City	IA		143
50.	Davenport (IA)-R. Island-Moline (IL)	IA/IL		96
51.	Ottumwa (IA)-Kirksville (MO)	IA/MO	x	199
52.	Boise	ID	x	118
53.	Idaho Falls-Pocatello	ID		163
54.	Twin Falls	ID	x	191
55.	Champaign & Sprngfld-Decatur	IL	x	82
56.	Chicago	IL	x	3
57.	Peoria-Bloomington	IL		116
58.	Rockford	IL		133
59.	Quincy (IL)-Hannibal (MO)-Keokuk (IA)	IL/MO/IA		171
60.	Evansville	IN		101
61.	Ft. Wayne	IN	x	106
62.	Indianapolis	IN	x	25
63.	Lafayette, IN	IN		188
64.	South Bend-Elkhart	IN		88
65.	Terre Haute	IN	x	151
66.	Topeka	KS		138
67.	Wichita-Hutchinson Plus	KS	x	67
68.	Bowling Green	KY		183
69.	Lexington	KY		63
70.	Louisville	KY	x	48
71.	Paducah (KY)-Cape Girard (MO)-Harsbg (IL)	KY/MO/IL	x	80
72.	Alexandria, LA	LA	x	179
73.	Baton Rouge	LA	x	93

	DMA name	State	Covered markets	DMA rank
74.	Lafayette, LA	LA	x	123
75.	Lake Charles	LA		175
76.	New Orleans	LA	x	54
77.	Shreveport	LA	x	81
78.	Monroe (LA)-El Dorado (AR)	LA/AR		135
79.	Boston (Manchester)	MA	x	7
80.	Springfield-Holyoke	MA		109
81.	Baltimore	MD	x	24
82.	Salisbury	MD		148
83.	Bangor	ME	x	152
84.	Portland-Auburn	ME		74
85.	Presque Isle	ME		204
86.	Alpena	MI		208
87.	Detroit	MI	x	11
88.	Flint-Saginaw-Bay City	MI	x	66
89.	Grand Rapids-Kalmzoo-B. Crk	MI	x	39
90.	Lansing	MI		112
91.	Marquette	MI	x	178
92.	Traverse City-Cadillac	MI	x	113
93.	Mankato	MN		200
94.	Minneapolis-St. Paul	MN	x	15
95.	Rochestr (MN)-Mason City (IA)-Austin (MN)	MN/IA	x	153
96.	Duluth (MN)-Superior (WI)	MN/WI	x	137
97.	Columbia-Jefferson City	MO	x	139
98.	Kansas City	MO	x	31
99.	Springfield, MO	MO	x	76
100.	St. Joseph	MO	x	201
101.	St. Louis	MO	x	21
102.	Joplin (MO)-Pittsburg (KS)	MO/KS		144
103.	Biloxi-Gulfport	MS		160
104.	Columbus-Tupelo-West Point	MS	x	132
105.	Greenwood-Greenville	MS		184
106.	Hattiesburg-Laurel	MS		165
107.	Jackson, MS	MS	x	87
108.	Meridian	MS	x	185
109.	Billings	MT	x	170
110.	Butte-Bozeman, MT	MT	x	192
111.	Glendive	MT		210
112.	Great Falls	MT	x	190
113.	Helena	MT		206
114.	Missoula	MT		168
115.	Charlotte	NC	x	26
116.	Greensboro-H.Point-W.Salem	NC	x	47
117.	Greenville-N.Bern-Washngtn	NC		107
118.	Raleigh-Durham (Fayetvlle)	NC		29
119.	Wilmington	NC	x	136
120.	Fargo-Valley City	ND	x	119
121.	Minot-Bismarck-Dickinson	ND	x	158
122.	Lincoln & Hstngs-Krny Plus	NE		104
123.	North Platte	NE		209
124.	Omaha	NE	x	75
125.	Albuquerque-Santa Fe	NM	x	45
126.	Las Vegas	NV	x	43
127.	Reno	NV	x	110
128.	Albany-Schenectady-Troy	NY		56
129.	Binghamton	NY		157
130.	Buffalo	NY	x	49
131.	Elmira (Corning)	NY		173
132.	New York	NY	x	1
133.	Rochester, NY	NY		78
134.	Syracuse	NY	x	79
135.	Utica	NY	x	169
136.	Watertown	NY		176
137.	Cincinnati	OH		33
138.	Cleveland-Akron (Canton)	OH	x	17
139.	Columbus, OH	OH	x	32
140.	Dayton	OH	x	58
141.	Lima	OH		196
142.	Toledo	OH		71
143.	Youngstown	OH		103
144.	Zanesville	OH	x	203
145.	Oklahoma City	OK	x	45
146.	Tulsa	OK	x	62

	DMA name	State	Covered markets	DMA rank
147.	Bend, OR	OR	x	194
148.	Eugene	OR	x	120
149.	Medford-Klamath Falls	OR	x	141
150.	Portland, OR	OR	x	23
151.	Erie	PA		142
152.	Harrisburg-Lncstr-Leb-York	PA		41
153.	Johnstown-Altoona	PA	x	98
154.	Philadelphia	PA	x	4
155.	Pittsburgh	PA	x	22
156.	Wilkes Barre-Scranton	PA		53
157.	Providence (RI)-New Bedford (MA)	RI/MA		51
158.	Charleston, SC	SC	x	100
159.	Columbia, SC	SC		83
160.	Myrtle Beach-Florence	SC		105
161.	Greenvll-Spart-Ashevll-And	SC/NC		36
162.	Rapid City	SD	x	177
163.	Sioux Falls (Mitchell)	SD	x	115
164.	Chattanooga	TN	x	86
165.	Jackson, TN	TN		174
166.	Knoxville	TN	x	60
167.	Memphis	TN	x	44
168.	Nashville	TN	x	30
169.	Tri-Cities, TN-VA	TN-VA		92
170.	Abilene-Sweetwater	TX		164
171.	Amarillo	TX	x	131
172.	Austin	TX		52
173.	Beaumont-Port Arthur	TX	x	140
174.	Corpus Christi	TX	x	129
175.	Dallas-Ft. Worth	TX	x	6
176.	El Paso (Las Cruces)	TX	x	99
177.	Harlingen-Wslco-Brnsvl-McA	TX	x	91
178.	Houston	TX	x	10
179.	Laredo	TX		187
180.	Lubbock	TX	x	147
181.	Odessa-Midland	TX	x	159
182.	San Angelo	TX	x	197
183.	San Antonio	TX	x	37
184.	Tyler-Longview (Lfkn&Ncgd)	TX		111
185.	Victoria	TX	x	205
186.	Waco-Temple-Bryan	TX		95
187.	Sherman, TX-Ada, OK	TX/OK		161
188.	Wichita Falls (TX) & Lawton (OK)	TX/OK	x	146
189.	Salt Lake City	UT	x	35
190.	Charlottesville	VA		182
191.	Harrisonburg	VA	x	181
192.	Norfolk-Portsmth-Newpt Nws	VA	x	42
193.	Richmond-Petersburg	VA	x	61
194.	Roanoke-Lynchburg	VA		68
195.	Burlington (VT)-Plattsburgh (NY)	VT/NY	x	90
196.	Seattle-Tacoma	WA	x	14
197.	Spokane	WA	x	77
198.	Yakima-Pasco-Rchlnd-Knnwck	WA	x	125
199.	Green Bay-Appleton	WI	x	69
200.	La Crosse-Eau Claire	WI		127
201.	Madison	WI	x	85
202.	Milwaukee	WI	x	34
203.	Wausau-Rhinelander	WI	x	134
204.	Bluefield-Beckley-Oak Hill	WV	x	150
205.	Charleston-Huntington	WV	x	65
206.	Clarksburg-Weston	WV		166
207.	Parkersburg	WV		189
208.	Wheeling (WV)-Steubenville (OH)	WV/OH		155
209.	Casper-Riverton	WY	x	198
210.	Cheyenne, WY-Scottsbluff, NE	WY/NE	x	195

[FR Doc. E8–31142 Filed 12–30–08; 8:45 am]
BILLING CODE 6712–01–P

DEPARTMENT OF TRANSPORTATION

Federal Railroad Administration

49 CFR Part 240

[Docket No. FRA–2008–0091]

RIN 2130–AB95

Qualification and Certification of Locomotive Engineers; Miscellaneous Revisions

AGENCY: Federal Railroad Administration (FRA), Department of Transportation (DOT).

ACTION: Notice of proposed rulemaking (NPRM).

SUMMARY: FRA proposes revisions to its regulation governing the qualification and certification of locomotive engineers by prohibiting a railroad from reclassifying a person's locomotive engineer certificate to that of a more restrictive class during the period in which the certificate is otherwise valid while permitting the railroad to place restrictions on the locomotive engineer if appropriate. FRA also proposes to clarify that revocation of an engineer's certificate may only occur for the reasons specified in the regulation. Additionally, FRA proposes provisions that would require each railroad to identify the actions it will take in the event that a person fails a skills performance test or the railroad finds deficiencies with an engineer's performance during an operational monitoring observation or unannounced compliance test. These proposals will address unanticipated consequences arising from reclassifications and clarify the grounds upon which a railroad may revoke a locomotive engineer's certification.

DATES: Written Comments: Written comments on the proposed rule must be received by March 2, 2009. Comments received after that date will be considered to the extent possible without incurring additional expense or delay. FRA anticipates being able to determine these matters without a public, oral hearing. However, if prior to January 30, 2009, FRA receives a specific request for a public, oral hearing accompanied by a showing that the party is unable to adequately present his or her position by written statement, a hearing will be scheduled and FRA will publish a supplemental notice in the **Federal Register** to inform interested parties of the date, time, and location of any such hearing.

ADDRESSES: You may submit comments identified by the docket number FRA–2008–0091 by any one of the following methods:

- *Fax:* 1–202–493–2251;
- *Mail:* U.S. Department of Transportation, Docket Operations, M–30, West Building Ground Floor, Room W12–140, 1200 New Jersey Avenue, SE., Washington, DC 20590;
- *Hand Delivery:* U.S. Department of Transportation, Docket Operations, West Building Ground Floor, Room W12–140, 1200 New Jersey Avenue, SE., Washington, DC 20590, between 9 a.m. and 5 p.m., Monday through Friday, except Federal holidays; or
- Electronically through the Federal eRulemaking Portal, *http://www.regulations.gov.* Follow the online instructions for submitting comments.

Instructions: All submissions must include the agency name, docket name and docket number or Regulatory Identification Number (RIN) for this rulemaking. Note that all comments received will be posted without change to *http://www.regulations.gov,* including any personal information provided. Please see the Privacy Act section of this document.

Docket: For access to the docket to read background documents or comments received, go to *http://www.regulations.gov* at any time or to U.S. Department of Transportation, Docket Operations, M–30, West Building Ground Floor, Room W12–140, 1200 New Jersey Avenue, SE., Washington, DC, between 9 a.m. and 5 p.m., Monday through Friday, except Federal holidays.

FOR FURTHER INFORMATION CONTACT: John L. Conklin, Program Manager, Locomotive Engineer Certification, U.S. Department of Transportation, Federal Railroad Administration, Mail Stop 25, West Building 3rd Floor West, Room W38–208, 1200 New Jersey Avenue, SE., Washington, DC 20590 (telephone: 202–493–6318); or John Seguin, Trial Attorney, U.S. Department of Transportation, Federal Railroad Administration, Office of Chief Counsel, RCC–10, Mail Stop 10, West Building 3rd Floor, Room W31–217, 1200 New Jersey Avenue, SE., Washington, DC 20590 (telephone: 202–493–6045).

SUPPLEMENTARY INFORMATION:

1. Background

Pursuant to the Rail Safety Improvement Act of 1988, Public Law No. 100–342, § 4, 102 Stat. 624, 625–27 (June 22, 1988) (recodified at 49 U.S.C. 20135), Congress conferred on the Secretary of DOT the authority to establish a locomotive engineer qualification licensing or certification program. The Secretary of Transportation delegated this authority to the Federal Railroad Administrator. 49 CFR 1.49(m). In 1991, FRA implemented this statutory provision by issuing a final rule. 56 FR 28228, 28254 (June 19, 1991) (codified at 49 CFR part 240).

FRA does not test or certify engineers itself. Rather, the regulation requires each railroad to adopt training and certification programs that meet minimum requirements. *See, e.g.*, 49 CFR 240.1 and 240.101. These requirements include, *inter alia,* a determination ''that the person has demonstrated . . . the skills to safely operate locomotives or locomotives and trains, including the proper application of the railroad's rules and practices for the safe operation of locomotives or trains, in the most demanding class or type of service that the person will be permitted to perform.'' 49 CFR 240.211(a). If a candidate passes the certification program, a railroad may issue a certificate to that person for any of the following classes of service: train service engineer, locomotive servicing engineer, or student engineer. 49 CFR 240.107(b). Train service engineers may operate locomotives singly or in multiples and may move them with or without cars coupled to them. Locomotive servicing engineers may operate locomotives singly or in multiples but may not move them with cars coupled to them. Student engineers may operate only under direct and immediate supervision of an instructor engineer. 49 CFR 240.107(c). A railroad may impose additional conditions or operational restrictions on the service an engineer may perform provided those conditions or restrictions are not inconsistent with part 240. 49 CFR 240.107(d).

A certified engineer must undergo periodic retesting and shall have his or her certification revoked if he or she demonstrates a failure to comply with those railroad rules and practices deemed essential for the safe operation of trains specified in § 240.117(e). Section 240.117(e) provides that a certification may only be revoked for six specific types of operating rules and operating practices violations: (1) Failure to control a locomotive or train in accordance with a signal indication that requires a complete stop before passing it; (2) Failure to adhere to limitations concerning train speed when the speed exceeds the maximum authorized limit by at least 10 miles per hour or a violation of restricted speed

that causes a reportable accident or incident under 49 CFR part 225; (3) Failure to adhere to certain federally required procedures for the safe use of train or engine brakes; (4) Occupying a main track or a segment of main track without proper authority or permission; (5) Failure to comply with prohibitions against tampering with locomotive mounted safety devices or knowingly operating a train with an unauthorized disabled safety device; or (6) Incidents of noncompliance with the regulations regarding the use or possession of alcohol and drugs. 49 CFR 240.117(e); *see also* 49 CFR 219.101 and 240.119(c).

Due to the potentially severe consequences to the individual resulting from the denial of certification, the denial of recertification, or the revocation of a certificate (*e.g.*, making it more difficult to be certified by another U.S. railroad under § 240.225 or being temporarily banned from operating a locomotive or train for any railroad operating in the U.S.), FRA regulations require each railroad to make a deliberative decision and provide for considerable FRA oversight. For example, if a railroad determines that a locomotive engineer may have violated an operating rule specified in § 240.117(e), the railroad is required to suspend the engineer's certificate pending a revocation determination. 49 CFR 240.307(b)(1). Prior to or upon suspending an engineer's certificate, a railroad shall provide notice of the reason for the suspension and an opportunity for a hearing before a presiding officer other than the investigating officer. 49 CFR 240.307(b)(2). Although a person may waive the opportunity for a hearing, the waiver must be in writing and meet certain safeguards to ensure the waiver is made voluntarily and with knowledge and understanding of the person's rights. 49 CFR 240.307(f).

If adversely affected by a railroad's decision regarding revocation, an engineer may petition FRA's Locomotive Engineer Review Board (LERB) to review the decision. 49 CFR 240.401. Following the LERB's decision, the adversely affected party (either the engineer or the railroad) has the right to request an administrative proceeding provided for by FRA. 49 CFR 240.407. The FRA administrative proceeding is a *de novo* hearing to find the relevant facts and determine the correct application of federal regulations and railroad rules and practices to those facts. Any party aggrieved by the presiding officer's decision may file an appeal with the Administrator. 49 CFR 240.411. In the case of a prospective engineer who is denied certification or a certified engineer who is denied recertification when the currently held certificate lapses, the railroad must notify the person ''of information known to the railroad that forms the basis for denying the person certification [or recertification] and provide the person a reasonable opportunity to explain or rebut that adverse information in writing prior to denying certification.'' 49 CFR 240.219(a). The person may then seek review of an adverse certification decision through a similar dispute resolution process that FRA affords to an engineer who has had his or her certificate revoked. 49 CFR 240.401–240.411.

With respect to deficiencies in an engineer's performance that do not rise to the level of revocation, each railroad retains a measure of discretion to fashion, within the context of collective bargaining agreements, appropriate responses, including disciplinary sanctions, to those types of deficiencies. *See, e.g.*, 49 CFR 240.5(d). However, in exercising that discretion, at least one Class I railroad has handled engineer performance deficiencies in a manner not contemplated by FRA when it implemented the engineer certification regulation and not used by the industry generally. The practices of this railroad included reclassifying the certificates of some of its train service engineers to student engineer certificates when it discovered deficiencies in the engineers' performance not specifically identified in § 240.117(e). The railroad did not provide a hearing regarding the reclassification decision. The reason for the reclassifications appears to be related to a deficiency in performance skills, but not a failure to pass a skills performance test required for recertification. In some instances, subsequent skills performance tests were provided and the newly reclassified student engineers that failed those tests were denied certification and their employment was terminated by the railroad.

The consequences of that Class I railroad's policy—*inter alia,* engineers being required to exchange their train service certificates for student engineer certificates based on deficiencies not specified in § 240.117(e) without receiving a hearing pursuant to § 240.307 and the potential for disparate treatment of similarly situated engineers—were simply not anticipated by FRA when it originally issued the regulations contained in part 240. However, because the regulation is silent with respect to reclassifications, FRA has interpreted the plain language of the existing regulation to permit reclassifications despite these unanticipated consequences. Consequently, FRA believes that modification of the existing regulation is necessary to address this issue.

In an effort to eliminate the unanticipated consequences created by unilateral reclassification of an engineer's certificate and to clarify the regulations regarding revocations, FRA proposes to make three specific changes to part 240. First, FRA proposes to prohibit the practice of reclassifying any type of engineer's certification to a more restrictive class of certificate or to a student engineer certificate during the period in which the certification is otherwise valid. Second, FRA proposes to clarify part 240 to ensure that all parties understand that revocation of an engineer's certificate may only occur for the reasons specified in the regulation. Third, FRA proposes to require each railroad to identify the potential actions it may take in the event that a person fails a skills performance test or that the railroad finds deficiencies with an engineer's performance during an operational monitoring observation or unannounced compliance test or otherwise becomes aware of such deficiencies. These proposals are not only consistent with the overall original intent of part 240, but are also consistent with current industry practice concerning reclassification and revocation.

2. Additional Issues

In addition to the proposed changes discussed above, FRA is considering making some minor revisions to update part 240 and make it consistent with other FRA regulations and guidance. Those proposed revisions are detailed below. FRA seeks comments from interested parties on these proposed modifications.

A. Deletion of Implementation and Phase-In Dates

FRA proposes to eliminate the implementation and phase-in dates listed throughout part 240 and any section or section heading that references those dates. The dates have long passed and are no longer relevant.

B. Deletion of Prior Incident Provisions

FRA proposes to delete §§ 240.117(i) and (j). The dates listed in those sections concerning prior incidents have long passed and those sections are no longer needed.

C. Consistency With Other Regulations

FRA proposes to revise the language in part 240 containing references to various provisions in 49 CFR part 232

(*see, e.g.*, §§ 240.117(e)(3) and 240.309(e)(3)) in order to make them consistent with the language in part 232. When FRA previously made substantive modifications to part 240, the provisions of part 232 were still being drafted. As a result, the terms used in some sections of part 240 to describe the provisions of part 232 (*i.e.*, initial terminal, intermediate terminal, or transfer train and yard test) differ from the actual terms used in part 232 (*i.e.*, Class I, Class IA, Class II, Class III, or transfer train brake test).

FRA also proposes to revise the term ''annually monitored'' in § 240.129(c)(2) to read ''monitored each calendar year.'' That revision would make the provision consistent with the language used in § 240.303(b).

D. Consistency With FRA Guidance

FRA proposes to amend §§ 240.129(e) and 240.303(d) in order to make them consistent with guidance provided by FRA in Memorandum OP–04–13 (February 3, 2004) which can be found on FRA's Web site at *http://www.fra.dot.gov/downloads/safety/advisories/op0413.pdf.* Although §§ 240.129(e) and 240.303(d) could be read to require railroads to give engineers three different tests per calendar year, Memorandum OP–04–13 makes clear that railroads are required to only give one test per calendar year under those sections. Accordingly, §§ 240.129(e) and 240.303(d) would be amended to make them consistent with Memorandum OP–04–13.

E. Civil Penalty Schedule

FRA proposes to amend the penalty schedule for § 240.203 listed in the Schedule of Civil Penalties in Appendix A to part 240. Although the text of § 240.203 only lists two subsections ((a) and (b)), the current penalty schedule for § 240.203 lists three subsections ((a), (b), and (c)). FRA proposes to delete the reference to §§ 240.203(a)(1)–(3) in the penalty schedule and revise §§ 240.203 (b) and (c) in the penalty schedule to reference paragraphs (a) and (b). These proposed changes will make the regulatory text and the penalty schedule consistent.

FRA also proposes to amend the penalty schedule for § 240.205 listed in the Schedule of Civil Penalties in Appendix A to part 240. Although the text of § 240.205 only lists subsections (a) and (b), the current penalty schedule for § 240.205 lists subsections (a) and (d). FRA proposes to amend the reference to subsection (d) in the current penalty schedule for § 240.205 to read (b).

F. Inaccurate References

FRA proposes to amend the reference to § 240.15 in § 240.307(j) to read § 240.215. Section 240.15 does not exist.

FRA proposes to amend the reference to 49 CFR 218.5(f) in § 240.7 (subsection (1) of the definition of ''*locomotive engineer*'') to read 49 CFR 218.5. There is no subsection (f) in § 218.5.

FRA proposes to amend the reference to paragraph (c) in § 240.203(a) to read paragraph (b). There is no paragraph (c) in § 240.203.

G. Appendix D

FRA proposes to delete the last paragraph of Appendix D to part 240 which begins ''Although the number of state agencies * * *.'' The paragraph is no longer relevant because all states now participate in the National Driver Register program.

III. Section-by-Section Analysis

Section 240.107 Criteria for designation of classes of service

FRA proposes to amend this section by adding a new paragraph (e) that would prohibit a railroad from reclassifying the certification of any type of certified engineer to a more restrictive class of certificate or to a student engineer certificate during the period in which the certification is otherwise valid. Although reclassification has been referred to by different names by various parties (*e.g.*, demotion, diminution in the quality of a license, etc.), the practice that FRA is proposing to prohibit is the taking of any type of engineering certificate, during the period in which the certificate is valid, and replacing it with a more restrictive class of certificate or a student engineer certificate based on deficiencies found during operational and skills tests that do not require revocation of an engineer's certification under §§ 240.117(e) or 240.119(c).

Although FRA has previously interpreted the plain language of the regulation to permit reclassification, the unanticipated consequences of that practice necessitate its prohibition. As explained earlier in this preamble, the effect of the reclassification policy used by one Class I railroad has been to require some engineers to exchange their train service or locomotive servicing certificates for student engineer certificates without an opportunity for review of the reclassification decision. An engineer who is reclassified to a student could find it more difficult to be certified by another U.S. railroad than an engineer who has not been reclassified. Further, there is significant room for abuse in a system that allows reclassification based on the somewhat subjective scoring of a skills performance test. Thus, FRA proposes to prohibit railroads from requiring an engineer to exchange his or her train service or locomotive servicing certification for a more restrictive class of certificate or a student engineer certificate during the period in which the recertification is otherwise valid.

FRA has considered other options, including permitting reclassification while providing affected engineers with the option of challenging the reclassification through a hearing. However, allowing reclassifications, even with a hearing, could result in the disparate treatment of engineers. If, for example, two train service engineers commit the same operating deficiency, a railroad may decide to reprimand one of the engineers but reclassify the certificate of the other engineer to a student engineer certificate. Assuming the reclassification is upheld during the hearing process, one engineer could return to work as a train service engineer while the other could only return to work as a student engineer. This proposal attempts to eliminate the potential for disparate treatment that could result from the practice of reclassifying engineers' certificates.

The elimination of disparate treatment of locomotive engineers accords with the original design and intent of part 240. As FRA noted in the 1989 NPRM:

> [T]here is at least anecdotal evidence to support the proposition that similar events receive significantly disparate treatment. Such differences exist both within and between railroads. Those differences include decisions on whether a particular person will or will not be brought before the discipline system for a given course of conduct to a wide range of punishments imposed for the same types of failure to adhere to company rules under similar circumstances.

54 FR 50890, 50899–50900 (December 11, 1989). Accordingly, part 240 requires railroads to take specific actions for clearly articulated types of non-compliance in an effort to prevent disparate treatment. For example, §§ 240.117 and 240.119 establish specific revocation periods for instances of non-compliance with operating rules and practices, as well as drug and alcohol regulations. The proposals in this NPRM further FRA's objective to prevent the disparate treatment of engineers by prohibiting the reclassification of an engineer certificate and providing that revocation of an engineer's certificate may only occur for the reasons specified in the regulation.

While the proposal would prohibit the practice of reclassification, it would

not prevent the railroads from continuing to pursue other measures to ensure the safe operation of locomotives. For example, this proposal would not prevent a railroad from placing restrictions on a certificate pursuant to § 240.107(d). As FRA stated in the 1993 interim final rule:

> A second set of interpretive questions has been generated by the desire of some railroads to certify a person as a train service engineer but then impose significant limits or constraints on the operational authority of that person. This section [240.107] permits railroads to take such action and can be employed by them to address issues such as utilizing persons who have sufficient skills to perform in terminal or yard service but lack the knowledge or skill to operate trains beyond terminal areas. Railroads that elect to follow this approach will of course need to structure their implementation program submissions to reflect any differences in the training or testing of these engineers that would flow from their more limited operating responsibilities.

58 FR 18982, 18995 (April 9, 1993). It should be noted, however, that while § 240.107(d) permits a railroad to place restrictions on a certificate, restrictions are applied and reviewed in accordance with internal railroad rules, procedures and processes developed in coordination with its employees. Part 240 does not govern the issuance or review of restrictions; that is a matter handled under a railroad's internal discipline system or collective bargaining agreement.

This proposal would also not prevent a railroad from suspending/revoking a certificate pursuant to § 240.307 for violation of one of the provisions contained in § 240.117(e), or prohibiting a person from operating a locomotive as a train service or locomotive servicing engineer pursuant to § 240.211(c). Further, this proposal would not prevent a railroad from offering an engineer the opportunity to work for the railroad in any other capacity as long as the engineer's current certificate was not reclassified. For example, collective bargaining agreements often contain a provision by which the parties agree to permit flowback from an engineer job to a conductor job if a locomotive engineer should somehow become ineligible to operate locomotives or trains. As FRA has previously clarified, part 240 is not intended to create or prohibit flowback. *See* § 240.5(e) and 64 FR 60966, 60975 (November 8, 1999).

This proposal would not convert part 240's locomotive engineer certification system into a licensing system. Although some parties have referred to the practice of reclassification as a ''diminution in the quality of a license,'' a certificate is not a license and the proposal would not convert a locomotive engineer certificate issued in accordance with part 240 into a license. Indeed, in adopting a certification system (*i.e.*, FRA sets eligibility criteria but leaves it to the railroads to evaluate candidates by those standards) rather than a traditional licensing system (*i.e.*, a government agency sets eligibility criteria and evaluates candidates), FRA noted that part 240 ''afford railroads considerable discretion'' in the daily administration of their certification program but ''FRA bears responsibility for the manner in which the railroads exercise that discretion, since the performance of the railroads'' under part 240 will determine whether their safety purposes are fulfilled. 56 FR 28228, 28229–28230 (June 19, 1991). This proposal continues that relationship. FRA seeks comments from interested parties on this proposal.

Additionally, FRA seeks comments regarding the railroads' assessment of engineer performance during the period in which an engineer's certificate is otherwise valid. Are the current processes set up by the railroads to assess an engineer's performance during the period of certification appropriate? Are railroads accurately assessing the skills and knowledge of engineers? Do engineers have a chance to seek meaningful review of the railroads' assessments during the period in which an engineer's certificate is otherwise valid? FRA seeks comments from interested parties on these topics.

Section 240.127 Criteria for Examining Skill Performance

FRA proposes to amend this section to require each railroad to indicate the action it will take, beyond those required by § 240.211(c), in the event that a person fails a skills performance test. Pursuant to § 240.101 and § 240.103, each railroad must submit its written certification program, including its procedures for skill performance testing under § 240.127 and monitoring operational performance under § 240.129, for FRA approval. That review process, in connection with this proposal, would permit FRA an opportunity to ensure that each railroad is handling skills test failures in accordance with the intent and spirit of the regulation. The proposal will also compel each railroad to carefully consider the process by which it will handle skill test failures and demonstrate to FRA that it is dealing with its engineers in an objective manner.

Although FRA considered other options, such as prescribing the specific actions a railroad must take, FRA believes it should be left up to each railroad to decide the appropriate action to take in light of various factors, including collective bargaining agreements. Indeed, FRA previously proposed prescribing the number of tests and interval between retests and other consequences of test failure in the 1989 NPRM (54 FR 50890, 50933–50935 (December 11, 1989)), but did not implement those proposals based, in part, on commenters' concerns that the proposals would disrupt contractual agreements (56 FR 28228, 28236–28237 (June 19, 1991)). Further, FRA has found that the vast majority of railroads have adequate policies to deal with skills test failures or deficiencies and have handled them appropriately for many years.

To avoid restricting the options available to the railroads and employee representatives to develop processes for handling skill test failures, FRA designed this proposal to be as flexible as possible. There are a variety of actions and approaches that a railroad can take in response to a skills test failure and FRA does not want to stifle a railroad's ability to adopt an approach that is best for its organization. Some of the actions railroads may want to consider include: Provide remedial training for engineers who fail skills tests or have deficiencies in their performance; automatically download event recorder data upon a test failure or deficient performance in order to preserve evidence of the failure/deficiency; require two supervisors to ride along on a retest; and retest an engineer on an actual train if the engineer failed a test on a simulator. Each railroad should also consider implementing a formal procedure whereby an engineer is given the opportunity to explain, in writing, the factors that he or she believes caused their skills test failure or performance deficiencies. This explanation may allow a railroad to determine what areas of training to focus on or perhaps discover that the reason for the failure/deficiency was due to something other than a lack of skills. Indeed, it is disconcerting for FRA to be informed that a certified engineer, who may have been safely operating locomotives for years, no longer has the skills necessary to operate safely; thus FRA also suggests that each railroad consider whether a medical examination might reveal a reason for a diminishment in skills proficiency.

FRA believes there are numerous other approaches that could and should be considered and evaluated by railroads and their employees. FRA realizes that a railroad's list of actions

it will take in response to a skills test failure or deficient performance could be expansive given the various circumstances that could contribute to a test failure or deficient performance.

Although a railroad will be required to update its certification program under this proposal, FRA does not consider the update to be a material modification pursuant to § 240.103(e). Of course, FRA may find issues during a review or audit of the updated certification program and will address those issues with the railroad at that time. FRA seeks comments from interested parties on this proposal.

Additionally, FRA is aware of concerns raised by engineers that they have no way of knowing why and how they failed a skills test or monitoring ride. In particular, some engineers are concerned that they do not know how the scoring systems used by railroads to grade skills and operational monitoring rides function. FRA is seeking comments on whether FRA should require the railroads to explain the scoring system they use to determine whether a person passes or fails a skills test or operational monitoring ride. Requiring a railroad to explain its scoring system will likely have the benefit of ensuring that the scoring criteria are transparent and that pass/fail determinations are arrived at consistently throughout the railroad.

Section 240.129 Criteria for Monitoring Operational Performance of Certified Engineers

FRA proposes to amend this section to require railroads to indicate the action they will take in the event they find deficiencies with an engineer's performance during an operational monitoring observation or unannounced compliance test. As explained in § 240.127 above, FRA believes it is up to each railroad to decide the appropriate action to take in light of various factors, including collective bargaining agreements. Further, FRA has found that the vast majority of railroads have adequate policies to deal with deficiencies with an engineer's performance and have handled them appropriately for many years.

For a discussion of the benefits of this proposal and actions railroads may want to consider taking in the event they find deficiencies with an engineer's performance, see section 240.127 above.

Although a railroad will be required to update its certification program under this proposal, FRA does not consider the update to be a material modification pursuant to § 240.103(e). FRA seeks comments from interested parties on this proposal.

Additionally, for the reasons explained above, FRA is seeking comments on whether FRA should require the railroads to explain the scoring system they use to determine whether a person passes or fails a skills test or operational monitoring ride.

Section 240.307 Revocation of Certification

FRA proposes to amend this section to clarify and ensure that railroads understand that they may revoke an engineer's certificate only for that conduct specifically identified in § 240.117(e) or § 240.119(c). FRA has been informed by at least one Class I railroad that it believes § 240.307 could be read to allow revocation for deficiencies other than those specified in § 240.117(e) or § 240.119(c). FRA proposes to make clear that such an interpretation is incorrect and contravenes the intent and purpose of part 240 when it was issued. As FRA stated in the 1993 interim final rule:

> Revocation of certification can occur when the locomotive engineer in question is found to have violated one of the five cardinal safety rules or the rules controlling alcohol and drug use.
>
> * * * * *
>
> When considering revocation, FRA[] * * * contemplated that decisions to revoke certification would only be based on noncompliance with an operational safety directive or a violation of FRA's rules controlling alcohol and drug use by railroad workers.
>
> * * * * *
>
> As noted above, FRA contemplated that decisions to revoke certification would be based on noncompliance with the operational safety directives contained in § 240.117 and § 240.119.

58 FR 18982, 18989, 18999–19000 (April 9, 1993). To eliminate any ambiguity, FRA is proposing to clarify the regulation to ensure that it is applied in accordance with FRA's intent. FRA seeks comments from interested parties on this proposal.

IV. Regulatory Impact and Notices

1. Executive Order 12866 and DOT Regulatory Policies and Procedures

This proposed rule has been evaluated in accordance with existing policies and procedures, and determined to be non-significant under both Executive Order 12866 and DOT policies and procedures. *See* 44 FR 11034 (February 26, 1979). FRA has prepared and placed in Docket No. FRA–2008–0091 a Regulatory Analysis addressing the economic impact of this proposed rule. Document inspection and copying facilities are available at the DOT Central Docket Management Facility located in Room W12–140 on the Ground level of the West Building, 1200 New Jersey Avenue, SE., Washington, DC 20590. Docket material is also available for inspection electronically through the Federal eRulemaking Portal at *http://www.regulations.gov.* Photocopies may also be obtained by submitting a written request to the FRA Docket Clerk at the Office of Chief Counsel, RCC–10, Mail Stop 10, Federal Railroad Administration, 1200 New Jersey Avenue, SE., Washington, DC 20590; please refer to Docket No. FRA–2008–0091.

In this proposed rule, FRA is clarifying and/or amending certain sections of its existing regulation pertaining to the qualification and certification of locomotive engineers. Costs that may be incurred due to the proposed rule are presented below. The revision or amendments to a railroad's certification program will not need to be submitted to FRA, but must be available to present to FRA inspectors. The table below presents the estimated 20-year monetary costs associated with the proposed rule, at discount rates of 3 percent and 7 percent.

Total 20-year costs	($)
Revisions to engineer certification programs	345,168
Total Cost	345,168
Total 20-Year Costs (Discounted at 3%)	335,115
Total 20-Year Costs (Discounted at 7%)	322,587

This analysis determines that over a 20-year period the discounted costs would be approximately $322,587.

The benefits that would accrue cannot be expressed in monetary terms; however, FRA is confident that such benefits would meet or exceed the costs associated with implementation of the proposed rule. The main benefit of this proposed rule is that railroads will no longer be able to use this regulation in a manner not contemplated by FRA. FRA also anticipates benefits flowing from a more precise and complete regulation. Benefits resulting from this proposed rule are process improvements that assist FRA in working with a railroad to resolve problems associated with the engineer certifications. The proposed rule works with railroad carriers' needs and operating environments to produce a regulatory scheme that is economically efficient while providing FRA oversight. Savings, that have not been quantified, would accrue from the consolidated provisions of the rule and the clarification of the railroads' certification programs.

2. Regulatory Flexibility Act and Executive Order 13272

The Regulatory Flexibility Act of 1980 (5 U.S.C. 601 *et seq.*) and Executive Order 13272 (67 FR 53461, August 16, 2002) require agency review of proposed and final rules to assess their impact on small entities. Pursuant to the Regulatory Flexibility Act of 1980, 5 U.S.C. 605(b), FRA has prepared and placed in the docket a Certification Statement that assesses the small entity impact of this proposed rule, and certifies that this proposed rule is not expected to have a significant economic impact on a substantial number of small entities.

Document inspection and copying facilities are available at the DOT Central Docket Management Facility located in Room W12–140 on the Ground level of the West Building, 1200 New Jersey Avenue SE., Washington, DC 20590. Docket material is also available for inspection electronically through the Federal eRulemaking Portal at *http://www.regulations.gov.* Photocopies may also be obtained by submitting a written request to the FRA Docket Clerk at the Office of Chief Counsel, RCC–10, Mail Stop 10, Federal Railroad Administration, 1200 New Jersey Avenue, SE., Washington, DC 20590; please refer to Docket No. FRA–2008–0091.

The U.S. Small Business Administration (SBA) stipulates in its ''Size Standards'' that the largest a railroad business firm that is ''for-profit'' may be, and still be classified as a ''small entity,'' is 1,500 employees for ''Line-Haul Operating Railroads,'' and 500 employees for ''Switching and Terminal Establishments.'' ''Small entity'' is defined in the Act as a small business that is not independently owned and operated, and is not dominant in its field of operation. SBA's ''Size Standards'' may be altered by Federal agencies after consultation with SBA and in conjunction with public comment. Pursuant to that authority, FRA has published a final policy that formally establishes ''small entities'' as railroads which meet the line haulage revenue requirements of a Class III railroad. The revenue requirements are currently $20 million or less in annual operating revenue. The $20 million limit (which is adjusted by applying the railroad revenue deflator adjustment) is based on the Surface Transportation Board's threshold for a Class III railroad carrier. FRA uses the same revenue dollar limit to determine whether a railroad or shipper or contractor is a small entity.

There are approximately 718 railroads that would be affected by this regulation. Of this number, approximately 678, or 94 percent, are small entities. Consequently, this regulation affects a substantial number of small entities. However FRA does not anticipate that this regulation would impose a significant economic impact on a substantial number of small entities.

The factual basis for the certification that this proposed rule, if promulgated, will not have a significant economic impact on a substantial number of small entities, is that the only net cost incurred by small railroads due to this proposed regulation would be $376 (not discounted), which small railroads would incur during the first year of implementation of the regulation. This is far less than one percent of the annual average revenue for all small railroads ((approximately $47,000 in 2006 (not discounted)) per small railroad. Accordingly, FRA does not consider this impact to be significant. Nor does FRA anticipate that this regulation would result in long-term or short-term insolvency for any small railroad.

FRA invites comments from all interested parties on this Certification. FRA particularly encourages small entities that could potentially be impacted by the proposed amendments to participate in the public comment process by submitting comments on this assessment or this rulemaking to the official U.S. Department of Transportation (DOT) docket. A draft of the proposed rule has not been submitted to the Small Business Administration (SBA) for formal review. However, FRA will consider any comments submitted by the SBA in developing the final rule.

3. Paperwork Reduction Act

The information collection requirements in this proposed rule have been submitted for approval to the Office of Management and Budget (OMB) under the Paperwork Reduction Act of 1995, 44 U.S.C. 3501 *et seq.* The sections that contain the new information collection requirements are duly designated, and the estimated time to fulfill each requirement is as follows:

CFR section/subject	Respondent universe	Total annual responses	Average time per response	Total annual burden hours
240.9—Waivers—Petitions for Waiver.	718 railroads	3 petitions	1 hour	3
240.101/103—Certification Program: Written Program for Certifying Qualifications of Locomotive Engineers—Amendments.	718 railroads	50 amend. prog	1 hour	50
	20 railroads	20 new prog	40 hours	800
	20 railroads	20 reviews	1 hour	20
	718 railroads	30 mod. prog	45 minutes	23
—Certification Programs for New Railroads.				
—New Railroads Final Review and Submission of Certification Program.				
—Material Modifications to Approved Prog.				
240.105—Selection Criteria For Designated Supervisors of Locomotive Engineers (DSLEs)—Examinations of DSLEs.	718 railroads	50 examinations	1 hour	50
—Written Report by Railroad Chief Operating Officer of Testing of DSLE.	10 railroads	10 reports	1 hour	10
240.109—Candidate's Review and Written Comments on Prior Safety Conduct Data.	17,667 candidates	25 responses	1 hour	25

CFR section/subject	Respondent universe	Total annual responses	Average time per response	Total annual burden hours
240.111—Request for State Driving Data and National Driver Register Data—Driver's License Data Requests.	17,667 candidates	17,667 requests	15 minutes	4,417
	718 railroads	177 notifications + 177 requests.	15 minutes	89
	718 railroads		15 minutes	5
	53,000 candidates	20 comments	15 minutes	1
	718 railroads	4 letters 200 calls.	10 minutes	33
—National Driver Register Data: Notification by Railroad to Employees of Matches and Employee Requests to State Agency for Relevant Data.				
—Written Responses from Candidate on Driver's License Data.				
—Notice to Railroad of Absence of License.				
—Individual Duty to Furnish Data on Prior Conduct as Motor Vehicle Operator—Ph. Calls.				
240.113—Individual Duty to Furnish Data on Prior Safety Conduct as an Employee of A Different Railroad—Requests to Former Employing Railroad of Service Record and Railroad Responses.	17,667 candidates	353 requests + 353 responses.	15 min.; 30 min	265
240.119—Employee Self-Referral to EAP Counselor for Substance Abuse Disorder.	53,000 locomotive engineers	50 self-referrals	5 minutes	4
240.121—Criteria—Hearing/Vision Acuity Subsequent Years—Copies of Part 240 Appendix F to RR Medical Examiner.	20 new railroads	20 copies	15 min	5
	718 railroads	20 reports	1 hours	20
	718 railroads	10 notifications	15 minutes	3
—Medical Examiners Consultation with DSLE to Issue Conditional Certification Report.				
—Notification—Hearing/Vision Change by Certified Engineer to Railroad.				
New	718 railroads	718 amended programs	5 hours	3,590
New				
240.201/221/223/301—List of DSLEs.	718 railroads	718 railroads	60 minutes	718
	718 railroads	718 updates	60 minutes	718
—List of Design. Qual. Locomotive Engineers.				
240.201/217/223/301—Locomotive Engineers Certificate.	53,000 candidates	17,667 cert	5 minutes	1,472
240.205—Data to EAP Counselor and Furnishing of Records by Employee.	718 railroads	177 records	5 minutes	15
240.207—Medical Certificate on Hearing/Vision Acuity—Tests and Certificate Issuance.	53,000 candidates	17,667 cert	70 minutes	20,612
	718 railroads	10 determination	2 hours	20
—Written Determination by Medical Examiner Waiving Necessity of Wearing Hearing/Vision Corrective Device.				
240.219—Denial of Certification—Notification to Employee of Adverse Information and Employee Response.	17,667 candidates	30 letters + 30 responses	1 hour	60
	718 railroads	30 notifications	1 hour	30
—Notification of Adverse Decision.				

CFR section/subject	Respondent universe	Total annual responses	Average time per response	Total annual burden hours
240.229—Requirements for Joint Operations Territory—Notification by Engineer of Non-Qualification to Operate Train on Track Segment.	321 railroads	184 calls	5 minutes	15
240.309—Railroad Oversight Responsibilities—Instances of Identified Poor Safety Conduct.	15 railroads	6 annotations	15 minutes	2
TESTING REQUIREMENTS 240.209/213—Written Test.	53,000 candidates	17,667 tests	2 hours	35,334
240.211/213—Performance Test.	53,000 candidates	17,667 tests	2 hours	35,334
240.303—Annual Op. Monit.	53,000 candidates	53,000 tests	2 hours	106,000
Obs. Test—Annual Operating Rules Compliance Test.	53,000 candidates	53,000 tests	1 hour	53,000
RECORDKEEPING REQUIREMENTS 240.215—Recordkeeping—Cert. Loc. Eng.	718 railroads	17,667 records	30 minutes	8,834
240.305—Engineer's Non-Qualification Notice.	53,000 candidates	100 notific	5 minutes	8
—Engineer's Notice to RR—Loss of Qualification.	1,060 candidates	2 letters	30 minutes	1
240.307—Notice to Engineer of Disqualification.	718 railroads	900 notific. letters	1 hour	900
240.309—Railroad Oversight Responsibilities.	51 railroads	51 reviews	40 hours	2,040
—Performance of Annual Reviews/Analysis.	51 railroads	12 reports	1 hour	12
—Railroad Report of Findings.				

All estimates include the time for reviewing instructions; searching existing data sources; gathering or maintaining the needed data; and reviewing the information. Pursuant to 44 U.S.C. 3506(c)(2)(B), FRA solicits comments concerning: Whether these information collection requirements are necessary for the proper performance of the functions of FRA, including whether the information has practical utility; the accuracy of FRA's estimates of the burden of the information collection requirements; the quality, utility, and clarity of the information to be collected; and whether the burden of collection of information on those who are to respond, including through the use of automated collection techniques or other forms of information technology, may be minimized. For information or a copy of the paperwork package submitted to OMB, contact Mr. Robert Brogan, FRA Information Clearance Officer, at 202–493–6292, or Ms. Nakia Jackson at 202–493–6073.

Organizations and individuals desiring to submit comments on the collection of information requirements should direct them to Mr. Robert Brogan or Ms. Nakia Jackson, Federal Railroad Administration, 1200 New Jersey Avenue, SE., 3rd Floor, Washington, DC 20590. Comments may also be submitted via e-mail to Mr. Brogan or Ms. Jackson at the following address: *robert.brogan@dot.gov; nakia.jackson@dot.gov.*

OMB is required to make a decision concerning the collection of information requirements contained in this proposed rule between 30 and 60 days after publication of this document in the **Federal Register**. Therefore, a comment to OMB is best assured of having its full effect if OMB receives it within 30 days of publication.

The final rule will respond to any OMB or public comments on the information collection requirements contained in this proposal. FRA is not authorized to impose a penalty on persons for violating information collection requirements which do not display a current OMB control number, if required. FRA intends to obtain current OMB control numbers for any new information collection requirements resulting from this rulemaking action prior to the effective date of the final rule. The OMB control number, when assigned, will be announced by separate notice in the **Federal Register**.

4. Federalism Implications

Executive Order 13132, ''Federalism'' (64 FR 43255, Aug. 10, 1999), requires FRA to develop an accountable process to ensure ''meaningful and timely input by State and local officials in the development of regulatory policies that have federalism implications.'' ''Policies that have federalism implications'' are defined in the Executive Order to include regulations that have ''substantial direct effects on the States, on the relationship between the national government and the States, or on the distribution of power and responsibilities among the various levels of government.'' Under Executive Order 13132, the agency may not issue a regulation with federalism implications that imposes substantial direct compliance costs and that is not required by statute, unless the Federal government provides the funds necessary to pay the direct compliance costs incurred by State and local governments, the agency consults with State and local governments, or the agency consults with State and local government officials early in the process of developing the regulation. Where a regulation has federalism implications and preempts State law, the agency seeks to consult with State and local officials in the process of developing the regulation.

This NPRM has been analyzed in accordance with the principles and

criteria contained in Executive Order 13132. This proposed rule would not have a substantial effect on the States or their political subdivisions; it would not impose any compliance costs; and it would not affect the relationships between the Federal government and the States or their political subdivisions, or the distribution of power and responsibilities among the various levels of government. Consequently, FRA concludes that this NPRM has no federalism implications.

5. International Trade Impact Assessment

The Trade Agreement Act of 1979 prohibits Federal agencies from engaging in any standards or related activities that create unnecessary obstacles to the foreign commerce of the United States. Legitimate domestic objectives, such as safety, are not considered unnecessary obstacles. The statute also requires consideration of international standards and where appropriate, that they be the basis for U.S. standards.

This proposed rulemaking is purely domestic in nature and is not expected to affect trade opportunities for U.S. firms doing business overseas or for foreign firms doing business in the United States.

6. Environmental Impact.

FRA has evaluated this proposed rule in accordance with its ''Procedures for Considering Environmental Impacts'' (FRA's Procedures) (64 FR 28545, May 26, 1999) as required by the National Environmental Policy Act (42 U.S.C. 4321 *et seq.*), other environmental statutes, Executive Orders, and related regulatory requirements. FRA has determined that this proposed rule is not a major FRA action (requiring the preparation of an environmental impact statement or environmental assessment) because it is categorically excluded from detailed environmental review pursuant to section 4(c)(20) of FRA's Procedures. *See* 64 FR 28547 (May 26, 1999). Section 4(c)(20) reads as follows:

(c) Actions categorically excluded. Certain classes of FRA actions have been determined to be categorically excluded from the requirements of these Procedures as they do not individually or cumulatively have a significant effect on the human environment.

* * * * *

The following classes of FRA actions are categorically excluded:

* * * * *

(20) Promulgation of railroad safety rules and policy statements that do not result in significantly increased emissions or air or water pollutants or noise or increased traffic congestion in any mode of transportation.

In accordance with section 4(c) and (e) of FRA's Procedures, the agency has further concluded that no extraordinary circumstances exist with respect to this regulation that might trigger the need for a more detailed environmental review. As a result, FRA finds that this proposed rule is not a major Federal action significantly affecting the quality of the human environment.

7. Unfunded Mandates Reform Act of 1995

Pursuant to section 201 of the Unfunded Mandates Reform Act of 1995 (Pub. L. 104–4, 2 U.S.C. 1531), each Federal agency ''shall, unless otherwise prohibited by law, assess the effects of Federal regulatory actions on State, local, and tribal governments, and the private sector (other than to the extent that such regulations incorporate requirements specifically set forth in law).'' Section 202 of the Act (2 U.S.C. 1532) further requires that ''before promulgating any general notice of proposed rulemaking that is likely to result in the promulgation of any rule that includes any Federal mandate that may result in expenditure by State, local, and tribal governments, in the aggregate, or by the private sector, of $100,000,000 or more (adjusted annually for inflation) [currently $141,000,000] in any 1 year, and before promulgating any final rule for which a general notice of proposed rulemaking was published, the agency shall prepare a written statement'' detailing the effect on State, local, and tribal governments and the private sector. The proposed rule would not result in the expenditure, in the aggregate, of $141,000,000 or more in any one year, and thus preparation of such a statement is not required.

8. Energy Impact

Executive Order 13211 requires Federal agencies to prepare a Statement of Energy Effects for any ''significant energy action.'' 66 FR 28355 (May 22, 2001). Under the Executive Order, a ''significant energy action'' is defined as any action by an agency (normally published in the **Federal Register**) that promulgates or is expected to lead to the promulgation of a final rule or regulation, including notices of inquiry, advance notices of proposed rulemaking, and notices of proposed rulemaking: (1)(i) That is a significant regulatory action under Executive Order 12866 or any successor order, and (ii) is likely to have a significant adverse effect on the supply, distribution, or use of energy; or (2) that is designated by the Administrator of the Office of Information and Regulatory Affairs as a significant energy action. FRA has evaluated this NPRM in accordance with Executive Order 13211. FRA has determined that this NPRM is not likely to have a significant adverse effect on the supply, distribution, or use of energy. Consequently, FRA has determined that this NPRM is not a ''significant energy action'' within the meaning of Executive Order 13211.

9. Privacy Act

FRA wishes to inform all potential commenters that anyone is able to search the electronic form of all comments received into any agency docket by the name of the individual submitting the comment (or signing the comment, if submitted on behalf of an association, business, labor union, etc.). You may review DOT's complete Privacy Act Statement in the **Federal Register** published on April 11, 2000 (65 FR 19477–78) or you may visit *http://www.regulations.gov/search/footer/privacyanduse.jsp.*

List of Subjects in 49 CFR Part 240

Administrative practice and procedure, Penalties, Railroad employees, Railroad operating procedures, Railroad safety, Reporting and recordkeeping requirements.

The Proposed Rule

For the reasons discussed in the preamble, FRA proposes to amend Part 240 of chapter II, subtitle B of title 49 of the Code of Federal Regulations as follows:

PART 240—[AMENDED]

1. The authority citation for part 240 continues to read as follows:

Authority: 49 U.S.C. 20103, 20107, 20135, 21301, 21304, 21311; 28 U.S.C. 2461, note; and 49 CFR 1.49.

2. Section 240.7 is amended by revising paragraph (1) of the definition of ''*Locomotive engineer*'' to read as follows:

§ 240.7 Definitions.

* * * * *

Locomotive engineer * * *

(1) A person who moves a locomotive or group of locomotives within the confines of a locomotive repair or servicing area as provided for in 49 CFR 218.5 and 218.29(a)(1); or

* * * * *

3. Section 240.101 is amended by revising paragraphs (a), (b) and (c) introductory text to read as follows:

§ 240.101 Certification program required.

(a) Each railroad subject to this part shall have in effect a written program

for certifying the qualifications of locomotive engineers.

(b) Each railroad shall have such a program in effect prior to commencing operations.

(c) Each railroad shall have a certification program approved in accordance with § 240.103 that includes:

* * * * *

4. Section 240.107 is amended by adding a new paragraph (e) to read as follows:

§ 240.107 Criteria for designation of classes of service.

* * * * *

(e) A railroad shall not reclassify the certification of any type of certified engineer to a more restrictive class of certificate or a student engineer certificate during the period in which the certification is otherwise valid.

5. Section 240.109 is amended by revising paragraph (e) as follows:

§ 240.109 General criteria for eligibility based on prior safety conduct.

* * * * *

(e) When evaluating a person's motor vehicle driving record or a person's railroad employment record, a railroad shall not consider information concerning motor vehicle driving incidents or prior railroad safety conduct that occurred at a time other than that specifically provided for in § 240.115, § 240.117 or § 240.119 of this subpart.

* * * * *

6. Section 240.111 is amended by revising paragraph (a) introductory text to read as follows:

§ 240.111 Individual's duty to furnish data on prior safety conduct as motor vehicle operator.

(a) Except for persons covered by § 240.109(h), each person seeking certification or recertification under this part shall, within 366 days preceding the date of the railroad's decision on certification or recertification:

* * * * *

7. Section 240.113 is amended by revising paragraph (a) introductory text to read as follows:

§ 240.113 Individual's duty to furnish data on prior safety conduct as an employee of a different railroad.

(a) Except for persons covered by § 240.109(h), each person seeking certification under this part shall, within 366 days preceding the date of the railroad's decision on certification or recertification:

* * * * *

8. Section 240.117 is amended by revising paragraph (e)(3) and by removing paragraphs (g)(4), (i), and (j) to read as follows:

§ 240.117 Criteria for consideration of operating rules compliance data.

* * * * *

(e) * * *

(3) Failure to adhere to procedures for the safe use of train or engine brakes when the procedures are required for compliance with the Class I, Class IA, Class II, Class III, or transfer train brake test provisions of 49 CFR part 232 or when the procedures are required for compliance with the class 1, class 1A, class II, or running brake test provisions of 49 CFR part 238;

* * * * *

9. Section 240.127 is amended by adding a new paragraph (e) to read as follows:

§ 240.127 Criteria for examining skill performance.

* * * * *

(e) Each railroad's program shall indicate the action the railroad will take in the event that a person fails an initial examination or a reexamination of his or her performance skills in accordance with the procedures required under § 240.211.

10. Section 240.129 is amended by revising paragraphs (c)(2) and (e) and adding a new paragraph (f) to read as follows:

§ 240.129 Criteria for monitoring operational performance of certified engineers.

* * * * *

(c) * * *

(2) Be designed so that each engineer shall be monitored each calendar year by a Designated Supervisor of Locomotive Engineers, who does not need to be qualified on the physical characteristics of the territory over which the operational performance monitoring will be conducted;

* * * * *

(e) The testing and examination procedures selected by the railroad for the conduct of a monitoring program shall be:

(1) Designed so that each locomotive engineer shall be given at least one unannounced test each calendar year;

(2) Designed to test:

(i) Engineer compliance with provisions of the railroad's operating rules that require response to signals that display less than a ''clear'' aspect, if the railroad operates with a signal system that must comply with part 236 of this chapter;

(ii) Engineer compliance with provisions of the railroad's operating rules, timetable or other mandatory directives that require affirmative response by the locomotive engineer to less favorable conditions than that which existed prior to initiation of the test; or

(iii) Engineer compliance with provisions of the railroad's operating rules, timetable or other mandatory directives violation of which by engineers were cited by the railroad as the cause of train accidents or train incidents in accident reports filed in compliance with part 225 of this chapter in the preceding calendar year;

(3) Designed so that the administration of these tests is effectively distributed throughout whatever portion of a 24-hour day that the railroad conducts its operations; and

(4) Designed so that individual tests are administered without prior notice to the engineer being tested.

(f) Each railroad's program shall indicate the action the railroad will take in the event that it finds deficiencies with a locomotive engineer's performance during an operational monitoring observation or unannounced compliance test administered in accordance with the procedures required under § 240.303.

11. Section 240.201 is revised to read as follows:

§ 240.201 Implementation.

(a) Each railroad shall designate in writing any person(s) it deems qualified as a designated supervisor of locomotive engineers. Each person so designated shall have demonstrated to the railroad through training, testing or prior experience that he or she has the knowledge, skills, and ability to be a designated supervisor of locomotive engineers.

(b) Each railroad shall designate in writing all persons that it will deem to be qualified as certified locomotive engineers for the purpose of initial compliance with paragraph (d) of this section, except as provided for in paragraph (h) of this section.

(1) Each person so designated shall have demonstrated to the railroad through training, testing or prior experience that he or she has the knowledge and skills to be a certified locomotive engineer.

(2) Each railroad shall issue a certificate that complies with § 240.223 to each person that it designates as qualified under the provisions of paragraph (b) of this section.

(c) No railroad shall permit or require a person, designated as qualified for certification under the provisions of paragraph (b) of this section, to perform service as a certified locomotive or train service engineer for more than a 36-

month period unless that person has been determined to be qualified in accordance with procedures that comply with subpart C of this part.

(d) No railroad shall permit or require any person to operate a locomotive in any class of locomotive or train service unless that person has been certified as a qualified locomotive engineer and issued a certificate that complies with § 240.223.

(e) No Class I railroad (including the National Railroad Passenger Corporation) or railroad providing commuter service shall designate any person it deems qualified as a designated supervisor of locomotive engineers or initially certify or recertify a person as a locomotive engineer in either locomotive or train service unless that person has been tested, evaluated, and determined to be qualified in accordance with procedures that comply with subpart C of this part.

(f) No Class II railroad shall designate any person it deems qualified as a designated supervisor of locomotive engineers or initially certify or recertify a person as a locomotive engineer in any class of locomotive or train service unless that person has been tested, evaluated and determined to be qualified in accordance with procedures that comply with subpart C of this part.

(g) No Class III railroad (including a switching and terminal or other railroad not otherwise classified) shall designate any person it deems qualified as a designated supervisor of locomotive engineers or initially certify or recertify a person as a locomotive engineer in any class of locomotive or train service unless that person has been tested, evaluated and determined to be qualified in accordance with procedures that comply with subpart C of this part.

(h) Each person designated as a locomotive engineer shall be issued a certificate that complies with § 240.223 prior to being required or permitted to operate a locomotive.

12. Section 240.203 is amended by revising paragraph (a) introductory text to read as follows:

§ 240.203 Determinations required as a prerequisite to certification.

(a) Except as provided in paragraph (b) of this section, each railroad, prior to initially certifying or recertifying any person as an engineer for any class of service, shall, in accordance with its FRA-approved program determine in writing that:

* * * * *

13. Section 240.205 is amended by revising paragraph (a) to read as follows:

§ 240.205 Procedures for determining eligibility based on prior safety conduct.

(a) Each railroad, prior to initially certifying or recertifying any person as an engineer for any class of service, shall determine that the person meets the eligibility requirements of § 240.115 involving prior conduct as a motor vehicle operator, § 240.117 involving prior conduct as a railroad worker, and § 240.119 involving substance abuse disorders and alcohol/drug rules compliance.

* * * * *

14. Section 240.207 is amended by revising paragraph (a) to read as follows:

§ 240.207 Procedures for making the determination on vision and hearing acuity.

(a) Each railroad, prior to initially certifying or recertifying any person as an engineer for any class of service, shall determine that the person meets the standards for visual acuity and hearing acuity prescribed in § 240.121.

* * * * *

15. Section 240.209 is amended by revising paragraph (a) to read as follows:

§ 240.209 Procedures for making the determination on knowledge.

(a) Each railroad, prior to initially certifying or recertifying any person as an engineer for any class of train or locomotive service, shall determine that the person has, in accordance with the requirements of § 240.125 of this part, demonstrated sufficient knowledge of the railroad's rules and practices for the safe operation of trains.

* * * * *

16. Section 240.211 is amended by revising paragraph (a) to read as follows:

§ 240.211 Procedures for making the determination on performance skills.

(a) Each railroad, prior to initially certifying or recertifying any person as an engineer for any class of train or locomotive service, shall determine that the person has demonstrated, in accordance with the requirements of § 240.127 of this part, the skills to safely operate locomotives or locomotives and trains, including the proper application of the railroad's rules and practices for the safe operation of locomotives or trains, in the most demanding class or type of service that the person will be permitted to perform.

* * * * *

17. Section 240.213 is amended by revising paragraph (a) to read as follows:

§ 240.213 Procedures for making the determination on completion of training program.

(a) Each railroad, prior to the initial issuance of a certificate to any person as a train or locomotive service engineer, shall determine that the person has, in accordance with the requirements of § 240.123 of this part, the knowledge and skills to safely operate a locomotive or train in the most demanding class or type of service that the person will be permitted to perform.

* * * * *

18. Section 240.215 is amended by revising paragraph (a) to read as follows:

§ 240.215 Retaining information supporting determinations.

(a) A railroad that issues, denies, or revokes a certificate after making the determinations required under § 240.203 shall maintain a record for each certified engineer or applicant for certification that contains the information the railroad relied on in making the determinations.

* * * * *

19. Section 240.217 is amended by revising paragraph (a) introductory text to read as follows:

§ 240.217 Time limitations for making determinations.

(a) A railroad shall not certify or recertify a person as a qualified locomotive engineer in any class of train or engine service, if the railroad is making:

* * * * *

20. Section 240.221 is amended by revising paragraphs (a) and (b) to read as follows:

§ 240.221 Identification of qualified persons.

(a) A railroad shall maintain a written record identifying each person designated by it as a supervisor of locomotive engineers.

(b) A railroad shall maintain a written record identifying each person designated as a certified locomotive engineer. That listing of certified engineers shall indicate the class of service the railroad determines each person is qualified to perform and date of the railroad's certification decision.

* * * * *

21. Section 240.225 is amended by revising paragraph (a) introductory text to read as follows:

§ 240.225 Reliance on qualification determinations made by other railroads.

(a) A railroad that is considering certification of a person as a qualified engineer may rely on determinations made by another railroad concerning that person's qualifications. The railroad's certification program shall address how the railroad will administer the training of previously uncertified engineers with extensive

operating experience or previously certified engineers who have had their certification expire. If a railroad's certification program fails to specify how to train a previously certified engineer hired from another railroad, then the railroad shall require the newly hired engineer to take the hiring railroad's entire training program. A railroad relying on another's certification shall determine that:

* * * * *

22. Section 240.303 is amended by revising paragraphs (a) and (d) to read as follows:

§ 240.303 Operational monitoring requirements.

(a) Each railroad to which this part applies shall, prior to FRA approval of its program in accordance with § 240.201, have a program to monitor the conduct of its certified locomotive engineers by performing both operational monitoring observations and by conducting unannounced operating rules compliance tests.

* * * * *

(d) The unannounced test program shall:

(1) Test engineer compliance with:

(i) One or more provisions of the railroad's operating rules that require response to signals that display less than a ''clear'' aspect, if the railroad operates with a signal system that must comply with part 236 of this chapter;

(ii) One or more provisions of the railroad's operating rules, timetable or other mandatory directives that require affirmative response by the locomotive engineer to less favorable conditions than that which existed prior to initiation of the test; or

(iii) Provisions of the railroad's operating rules, timetable or other mandatory directives the violations of which engineers were cited by the railroad as the cause of train accidents or train incidents in accident reports filed in compliance with part 225 of this chapter for the preceding year;

(2) Be conducted so that the administration of these tests is effectively distributed throughout whatever portion of a 24-hour day that the railroad conducts its operations;

(3) Be conducted so that individual tests are administered without prior notice to the locomotive engineer being tested; and

(4) Be conducted so that the results of the test are recorded on the certificate and entered on the record established under § 240.215 within 30 days of the day the test is administered.

23. Section 240.305 is amended by removing the introductory text and revising paragraph (a)(3) to read as follows

§ 240.305 Prohibited conduct.

(a) * * *

(3) Operate a locomotive or train without adhering to procedures for the safe use of train or engine brakes when the procedures are required for compliance with the Class I, Class IA, Class II, Class III, or transfer train brake test provisions of 49 CFR part 232 or when the procedures are required for compliance with the class 1, class 1A, class II, or running brake test provisions of 49 CFR part 238;

* * * * *

24. Section 240.307 is amended by revising paragraphs (a) and (j) introductory text to read as follows:

§ 240.307 Revocation of certification.

(a) Except as provided for in § 240.119(e), a railroad that certifies or recertifies a person as a qualified locomotive engineer and, during the period that certification is valid, acquires information regarding violations of § 240.117(e) or § 240.119(c) of this chapter, which convinces the railroad that the person no longer meets the qualification requirements of this part, shall revoke the person's certificate as a qualified locomotive engineer.

* * * * *

(j) The railroad shall place the relevant information in the records maintained in compliance with § 240.309 for Class I (including the National Railroad Passenger Corporation) and Class II railroads, and § 240.215 for Class III railroads if sufficient evidence meeting the criteria provided in paragraph (i) of this section, becomes available either:

* * * * *

25. Section 240.309 is amended by revising paragraphs (a) and (e)(3) to read as follows:

§ 240.309 Railroad oversight responsibilities.

(a) No later than March 31 of each year, each Class I railroad (including the National Railroad Passenger Corporation and a railroad providing commuter service) and Class II railroad shall conduct a formal annual review and analysis concerning the administration of its program for responding to detected instances of poor safety conduct by certified locomotive engineers during the prior calendar year.

* * * * *

(e) * * *

(3) Incidents involving noncompliance with the procedures for the safe use of train or engine brakes when the procedures are required for compliance with the Class I, Class IA, Class II, Class III, or transfer train brake test provisions of 49 CFR part 232 or when the procedures are required for compliance with the class 1, class 1A, class II, or running brake test provisions of 49 CFR part 238;

* * * * *

Appendix A to Part 240 [Amended]

26. Appendix A to part 240—Schedule of Civil Penalties is amended by removing the entries for sections 240.203(a) through (a)(3); redesignating the entries for sections 240.203(b) through 240.203(b)(4) as 240.203(a) through (a)(4); redesignating the entries for sections 240.203(c) through (c)(3) as 240.203(b) through (b)(3); and redesignating the entry for section 240.205(d) as 240.205(b) as follows:

Appendix D to Part 240 [Amended]

27. Appendix D is amended by removing the last paragraph.

Issued in Washington, DC, on December 23, 2008.

Clifford C. Eby,

Acting Administrator.

[FR Doc. E8–31062 Filed 12–30–08; 8:45 am]

BILLING CODE 4910–06–P

Notices

Federal Register

Vol. 73, No. 251

Wednesday, December 31, 2008

This section of the FEDERAL REGISTER contains documents other than rules or proposed rules that are applicable to the public. Notices of hearings and investigations, committee meetings, agency decisions and rulings, delegations of authority, filing of petitions and applications and agency statements of organization and functions are examples of documents appearing in this section.

DEPARTMENT OF AGRICULTURE

Cooperative State Research, Education, and Extension Service

Notice of Intent To Revise a Currently Approved Information Collection

AGENCY: Cooperative State Research, Education, and Extension Service, USDA.

ACTION: Notice and request for comments.

SUMMARY: In accordance with the Paperwork Reduction Act of 1995 (Pub. L. 104–13) and Office of Management and Budget (OMB) regulations at 5 CFR part 1320 (60 FR 44977, August 29, 1995), this notice announces the Cooperative State Research, Education, and Extension Service's (CSREES) intention to revise a currently approved information collection entitled, ''Reporting Requirements for State Plans of Work for Agricultural Research and Extension Formula Funds.'' The only proposed change to the information collection is that the initial five year plan of work will no longer be required.

DATES: Written comments on this notice must be received by March 2, 2009 to be assured of consideration. Comments received after that date will be considered to the extent practicable.

ADDRESSES: You may submit comments, identified by Docket ID# CSREES_FRDOC_0001, by any of the following methods: *Federal eRulemaking Portal: http://regulations.gov.* Follow the instructions for submitting comments.

E-mail: bhewitt@csrees.usda.gov;

Mail: Bart Hewitt, USDA/CSREES/OPA, STOP 2214, 1400 Independence Avenue, SW., Washington, DC 20250–2214;

Fax: (202) 720–7714.

FOR FURTHER INFORMATION CONTACT: Bart Hewitt, (202) 720–0747.

SUPPLEMENTARY INFORMATION: *Title:* Reporting Requirements for State Plans of Work for Agricultural Research and Extension Formula Grants.

OMB Number: 0524–0036.

Expiration Date of Current Approval: May 31, 2009.

Type of Request: Revision of a currently approved information collection for three years.

Abstract: The purpose of this collection of information is to continue implementing the requirements of sections 202 and 225 of the Agricultural Research, Extension, and Education Reform Act of 1998 (AREERA) which require that a plan of work must be submitted by each institution and approved by the Cooperative State Research, Education, and Extension Service (CSREES) before formula funds may be provided to the 1862 and 1890 land-grant institutions. The formula funds are authorized under the Hatch Act for agricultural research activities at the 1862 land-grant institutions, under the Smith-Lever Act for the extension activities at the 1862 land-grant institutions, and under sections 1444 and 1445 of the National Agricultural Research, Extension, and Teaching Policy Act of 1977 (NARETPA) for research and extension activities at the 1890 land-grant institutions. The plan of work must address critical agricultural issues in the State and describe the programs and projects targeted to address these issues using the CSREES formula funds. The plan of work also must describe the institution's multistate activities as well as their integrated research and extension activities.

This collection of information also includes the reporting requirements of section 102(c) of AREERA for the 1862 and 1890 land-grant institutions. This section requires the 1862, 1890, and 1994 land-grant institutions receiving agricultural research, education, and extension formula funds from CSREES of the Department of Agriculture (USDA) to establish and implement processes for obtaining input from persons who conduct or use agricultural research, extension, or education concerning the use of such funds by October 1, 1999. Section 102(c) further requires that the Secretary of Agriculture promulgate regulations that prescribe what the institutions must do to meet this requirement and the consequences of not complying with this requirement. *See* 65 FR 5993, Feb. 8, 2000 (7 CFR 3418) on Stakeholder Input Requirements for Recipients of Agricultural Research, Education, and Extension Formula Funds. This rule applies not only to the land-grant institutions which receive formula funds but also to the veterinary and forestry schools that are not land-grant institutions but which receive forestry research funds under the McIntire-Stennis Act of 1962 and Animal Health and Disease Research funds under section 1433 of the NARETPA. Failure to comply with the requirements of this rule may result in the withholding of a recipient institution's formula funds and redistribution of its share of formula funds to other eligible institutions. The institutions are required to annually report to CSREES: (1) The actions taken to seek stakeholder input to encourage their participation; (2) a brief statement of the process used by the recipient institution to identify individuals and groups who are stakeholders and to collect input from them; and (3) a statement of how collected input was considered. There is no legislatively prescribed form or format for this reporting requirement. However, the 1862 and 1890 land-grant institutions are required to report on their Stakeholder Input Process annually as part of their Annual Report of Accomplishments and Results.

Section 103(e) of AREERA requires that the 1862, 1890, and 1994 land-grant institutions establish a merit review process, prior to October 1, 1999, in order to obtain agricultural research and extension funds. Section 104(h) of AREERA also stipulated that a scientific peer review process be established for research programs funded under section 3(c)(3) of the Hatch Act (commonly referred to as Hatch Multistate Research Funds).

I. Initial 5-Year Plan of Work

Estimate of the Burden: The Initial 5-Year Plan of Work was submitted for the FY 2007–2011 Plan of Work in 2006. Thus, this reporting burden has been satisfied and will no longer be collected. Consequently, the total reporting and record keeping requirements for the submission of the ''Initial 5-Year Plan of Work'' is estimated to average 0 hours per response.

II. Annual Update to 5-Year Plan of Work

Estimate of the Burden: The total reporting and record keeping requirements for the submission of the ''Annual Update to the 5-Year Plan of Work'' is estimated to average 64 hours per response. There are five components of this ''5-Year Plan of Work'': ''Planned Programs,'' ''Stakeholder Input Process,'' ''Program Review Process,'' ''Multi-state Activities,'' and ''Integrated Activities.''

Estimated Number of Respondents: 75.

Estimated Number of Responses: 150.

Estimated Total Annual Burden on Respondents: 9,600 hours.

Frequency of Responses: Annually.

III. Annual Report of Accomplishments and Results

Estimate of the Burden: The total annual reporting and record keeping requirements of the ''Annual Report of Accomplishments and Results'' is estimated to average 260 hours per response.

Estimated Number of Respondents: 75.

Estimated Number of Responses: 150.

Estimated Total Annual Burden on Respondents: 39,000 hours.

Frequency of Responses: Annually.

Comments: Comments are invited on: (a) Whether the proposed collection of information is necessary for the proper performance of the functions of the agency, including whether the information will have practical utility; (b) the accuracy of the agency's estimate of the burden of the proposed collection of information including the validity of the methodology and assumptions used; (c) ways to enhance the quality, utility and clarity of the information to be collected; and (d) ways to minimize the burden of the collection of information on those who are to respond, including through the use of appropriate automated, electronic, mechanical, or other technological collection techniques or other forms of information technology.

All responses to this notice will be summarized and included in the request for OMB approval. All comments also will become a matter of public record.

Obtaining a Copy of the Information Collection: A copy of the information collection and related instructions may be obtained free of charge by contacting Bart Hewitt by telephone, (202) 720–0747, or by e-mail, *bhewitt@csrees.usda.gov.*

Done in Washington, DC, this 23rd day of December 2008.

Joseph Dunn,

Deputy Under Secretary, Research, Education, and Economics.

[FR Doc. E8–31143 Filed 12–30–08; 8:45 am]

BILLING CODE 3410–22–P

DEPARTMENT OF AGRICULTURE

Natural Resources Conservation Service

Notice of Intent: To Request an Extension and Revision of a Currently Approved Information Collection

AGENCY: Natural Resources Conservation Service (NRCS), USDA.

ACTION: Correction and request for comments.

SUMMARY: NRCS published in the **Federal Register** notice of October 22, 2008 (73 FR 62949), a document stating ''Notice to Reinstate a Previously Approved Information Collection.'' This notice corrects the previously published document. In accordance with the Paperwork Reduction Act of 1995 (44 U.S.C. Chapter 35), this notice announces the intention of NRCS to request an extension for, and a revision to, the currently approved information collection, Volunteer Program—Earth Team. The collected information will help NRCS match the skills of individuals who apply for volunteer work that will further the Agency's mission. Information will be collected from potential volunteers who are at least 14 years of age.

DATES: Comments on this notice must be received within 60 days after publication in the **Federal Register** to be assured of consideration.

Additional Information or Comments: Contact Michele Eginoire, National Volunteer Coordinator, at (515) 289–0325, extension 102. Submit comments to Michele by fax at (515) 289–4561, or by e-mail: *michele.eginoire@ia.usda.gov*.

SUPPLEMENTARY INFORMATION: Collection of this information is necessary to match volunteer assignments to Agency mission as required by Federal Personnel Manual Supplement 296–33, Subchapter 3. Agencies are authorized to recruit, train, and accept, with regard to Civil Service classification laws, rules or regulations, the services of individuals to serve without compensation. Volunteers may assist in any Agency program/project and may perform any activities that Agency employees are allowed. Volunteers must be at least 14 years of age. Persons interested in volunteering will have to write, call, e-mail, or visit an NRCS office, or visit the NRCS Web site at: *http://www.nrcs.usda.gov/feature/volunteers/* to complete and submit the forms.

Title: Volunteer Program—Earth Team.

OMB Number: 0578–0024.

Expiration Date of Approval: May 31, 2009.

Type of Request: Notice to Request for Extension and Revision of Currently Approved Information Collection.

Abstract: NRCS–PER–001, Volunteer Application and NRCS–PER–003, Agreement for Sponsored Voluntary Services, are discontinued. The information collected on these forms has been added to the Forest Service collection packet, the Office of Management and Budget (OMB) Control Number 0596–0080.

Form NRCS–PER–002, Volunteer Interest and Placement Summary, is an optional form and assists the volunteer's supervisor in placing the volunteer in a position which is beneficial to the volunteer and the Agency. The form is placed in a volunteer ''case file'' and will be destroyed 3 years after the volunteer has completed service. In the event that the volunteer is injured, the ''case file'' will be transferred to an Official Personnel Folder (OPF).

Estimate of Burden: Public reporting burden for this collection of information is estimated to average 3 minutes per response.

Respondents: Retirees, students, teachers, persons with disabilities, or senior citizens.

Estimated Number of Respondents: 500.

Estimated Number of Responses per Respondent: 1.

Estimated Total Annual Burden on Respondents: 25 hours.

Form NRCS–PER–004, Time Sheet, is also an optional form and provides the volunteer or their supervisor a simplified method for tracking the volunteer's time. The form is placed in a volunteer ''case file'' and will be destroyed 3 years after the volunteer has completed service. In the event that the volunteer is injured, the ''case file'' will be transferred to an OPF.

Estimate of Burden: Public reporting burden for this collection of information is estimated to average 1 minute per response.

Respondents: Retirees, students, teachers, persons with disabilities, or senior citizens.

Estimated Number of Respondents: 20,480.

Estimated Number of Responses per Respondent: 2.

Estimated Total Annual Burden on Respondents: 683 hours.

Comments are invited on: (1) Whether the proposed collection of information is necessary for the proper performance of the functions of the Agency, including whether the information will have practical utility; (2) the accuracy of the Agency's estimate of the burden of the proposed collection of information, including the validity of the methodology and assumptions used; (3) ways to enhance the quality, utility, and clarity of the information to be collected; and (4) ways to minimize the burden of the collection of information on those who are to respond, including the use of appropriate automated, electronic, mechanical, or other technological collection techniques or other forms of information technology. Comments may be sent to Michele Eginoire, National Earth Team Office, NRCS, 5140 Park Avenue, Suite C, Des Moines, Iowa 50321; telephone: (515) 289–0325, extension 102; fax: (515) 289–4561; e-mail: *michele.eginoire@ia.usda.gov.* All comments received will be available for public inspection during regular business hours at the same address. All responses to this notice will be summarized and included in the request for OMB approval. All comments also will become a matter of public record.

Signed in Washington, DC on December 12, 2008.

Arlen L. Lancaster,

Chief.

[FR Doc. E8–31071 Filed 12–30–08; 8:45 am]

BILLING CODE 3410–16–P

DEPARTMENT OF COMMERCE

Foreign–Trade Zones Board

[Order No. 1596]

Grant of Authority for Subzone Status, Haliburton Energy Services, Inc. (Barite Milling), New Orleans, Louisiana

Pursuant to its authority under the Foreign–Trade Zones Act of June 18, 1934, as amended (19 U.S.C. 81a–81u), the Foreign–Trade Zones Board (the Board) adopts the following Order:

Whereas, the Foreign–Trade Zones Act provides for ''...the establishment... of foreign–trade zones in ports of entry of the United States, to expedite and encourage foreign commerce, and for other purposes,'' and authorizes the Foreign–Trade Zones Board to grant qualified corporations the privilege of establishing foreign–trade zones in or adjacent to U.S. Customs and Border Protection ports of entry;

Whereas, the Board's regulations (15 CFR Part 400) provide for the establishment of special–purpose subzones when existing zone facilities cannot serve the specific use involved, and when the activity results in a significant public benefit and is in the public interest;

Whereas, the Port of New Orleans, grantee of Foreign–Trade Zone 2, has made application to the Board for authority to establish a special–purpose subzone at the barite milling facility of Haliburton Energy Services, Inc., located in New Orleans, Louisiana (FTZ Docket 22–2008, filed 04/01/08);

Whereas, notice inviting public comment was given in the **Federal Register** (73 FR 20246, 04/15/08); and,

Whereas, the Board adopts the findings and recommendations of the examiner's report, and finds the requirements of the FTZ Act and the Board's regulations are satisfied, and that approval of the application is in the public interest;

Now, therefore, the Board hereby grants authority for subzone status for activity related to barite milling at the facility of Haliburton Energy Services, Inc., located in New Orleans, Louisiana (Subzone 2K), as described in the application and **Federal Register** notice, and subject to the FTZ Act and the Board's regulations, including Section 400.28.

Signed at Washington, D.C., this 19th day of December 2008.

David M. Spooner,

Assistant Secretary of Commerce for Import Administration, Alternate Chairman, Foreign–Trade Zones Board.

Attest:

Andrew McGilvray,

Executive Secretary.

[FR Doc. E8–31166 Filed 12–30–08; 8:45 am]

BILLING CODE 3510–DS–S

DEPARTMENT OF COMMERCE

Foreign–Trade Zones Board

[Order No. 1595]

Grant of Authority for Subzone Status, Haliburton Energy Services, Inc. (Barite Milling), Westlake, Louisiana

Pursuant to its authority under the Foreign–Trade Zones Act of June 18, 1934, as amended (19 U.S.C. 81a–81u), the Foreign–Trade Zones Board (the Board) adopts the following Order:

Whereas, the Foreign–Trade Zones Act provides for ''...the establishment... of foreign–trade zones in ports of entry of the United States, to expedite and encourage foreign commerce, and for other purposes,'' and authorizes the Foreign–Trade Zones Board to grant qualified corporations the privilege of establishing foreign–trade zones in or adjacent to U.S. Customs and Border Protection ports of entry;

Whereas, the Board's regulations (15 CFR Part 400) provide for the establishment of special–purpose subzones when existing zone facilities cannot serve the specific use involved, and when the activity results in a significant public benefit and is in the public interest;

Whereas, the Lake Charles Harbor & Terminal District, grantee of Foreign–Trade Zone 87, has made application to the Board for authority to establish a special–purpose subzone at the barite milling facility of Haliburton Energy Services, Inc., located in Westlake, Louisiana (FTZ Docket 21–2008, filed 04/01/08);

Whereas, notice inviting public comment was given in the **Federal Register** (73 FR 20248, 04/15/08); and,

Whereas, the Board adopts the findings and recommendations of the examiner's report, and finds the requirements of the FTZ Act and the Board's regulations are satisfied, and that approval of the application is in the public interest;

Now, therefore, the Board hereby grants authority for subzone status for activity related to barite milling at the facility of Haliburton Energy Services, Inc., located in Westlake, Louisiana (Subzone 87C), as described in the application and **Federal Register** notice, and subject to the FTZ Act and the Board's regulations, including Section 400.28.

Signed at Washington, D.C., this 19th day of December 2008.

David M. Spooner,

Assistant Secretary of Commerce for Import Administration, Alternate Chairman, Foreign–Trade Zones Board.

Attest:

Andrew McGilvray.

Executive Secretary.

[FR Doc. E8–31167 Filed 12–30–08; 8:45 am]

BILLING CODE 3510–DS–S

DEPARTMENT OF COMMERCE

Foreign–Trade Zones Board

[Order No. 1594]

Grant of Authority for Subzone Status, Haliburton Energy Services, Inc. (Barite Milling), Corpus Christi, Texas

Pursuant to its authority under the Foreign–Trade Zones Act of June 18, 1934, as amended (19 U.S.C. 81a–81u), the Foreign–Trade Zones Board (the Board) adopts the following Order:

Whereas, the Foreign–Trade Zones Act provides for ''...the establishment...

of foreign–trade zones in ports of entry of the United States, to expedite and encourage foreign commerce, and for other purposes,'' and authorizes the Foreign–Trade Zones Board to grant qualified corporations the privilege of establishing foreign–trade zones in or adjacent to U.S. Customs and Border Protection ports of entry;

Whereas, the Board's regulations (15 CFR Part 400) provide for the establishment of special–purpose subzones when existing zone facilities cannot serve the specific use involved, and when the activity results in a significant public benefit and is in the public interest;

Whereas, the Port of Corpus Christi Authority, grantee of Foreign–Trade Zone 122, has made application to the Board for authority to establish a special–purpose subzone at the barite milling facility of Haliburton Energy Services, Inc., located in Corpus Christi, Texas (FTZ Docket 20–2008, filed 04/01/08);

Whereas, notice inviting public comment was given in the **Federal Register** (73 FR 20246, 04/15/08); and,

Whereas, the Board adopts the findings and recommendations of the examiner's report, and finds the requirements of the FTZ Act and the Board's regulations are satisfied, and that approval of the application is in the public interest;

Now, therefore, the Board hereby grants authority for subzone status for activity related to barite milling at the facility of Haliburton Energy Services, Inc., located in Corpus Christi, Texas (Subzone 122R), as described in the application and **Federal Register** notice, and subject to the FTZ Act and the Board's regulations, including Section 400.28.

Signed at Washington, D.C., this 19th day of December 2008.

David M. Spooner,

Assistant Secretary of Commerce for Import Administration, Alternate Chairman, Foreign–Trade Zones Board.

Attest:

Andrew McGilvray,

Executive Secretary.

[FR Doc. E8–31168 Filed 12–30–08; 8:45 am]

BILLING CODE 3510–DS–S

DEPARTMENT OF COMMERCE

Foreign–Trade Zones Board

[Order No. 1593]

Grant of Authority for Subzone Status, Hawker Beechcraft Corporation (Aircraft Manufacturing), Wichita and Salina, Kansas

Pursuant to its authority under the Foreign–Trade Zones Act of June 18, 1934, as amended (19 U.S.C. 81a–81u), the Foreign–Trade Zones Board (the Board) adopts the following Order:

Whereas, the Foreign–Trade Zones Act provides for ''...the establishment... of foreign–trade zones in ports of entry of the United States, to expedite and encourage foreign commerce, and for other purposes,'' and authorizes the Foreign–Trade Zones Board to grant qualified corporations the privilege of establishing foreign–trade zones in or adjacent to U.S. Customs and Border Protection ports of entry;

Whereas, the Board's regulations (15 CFR Part 400) provide for the establishment of special–purpose subzones when existing zone facilities cannot serve the specific use involved, and when the activity results in a significant public benefit and is in the public interest;

Whereas, the Board of County Commissioners of Sedgwick County, grantee of Foreign–Trade Zone 161, has made application to the Board for authority to establish a special–purpose subzone at the aircraft manufacturing facilities of Hawker Beechcraft Corporation, located in Wichita and Salina, Kansas (FTZ Docket 24–2008, filed 4/17/08);

Whereas, notice inviting public comment was given in the **Federal Register** (73 FR 21903–21904, 4/23/08); and,

Whereas, the Board adopts the findings and recommendations of the examiner's report, and finds the requirements of the FTZ Act and the Board's regulations are satisfied, and that approval of the application is in the public interest;

Now, therefore, the Board hereby grants authority for subzone status for activity related to aircraft manufacturing at the facilities of Hawker Beechcraft Corporation, located in Wichita and Salina, Kansas (Subzone 161C), as described in the application and **Federal Register** notice, and subject to the FTZ Act and the Board's regulations, including Section 400.28.

Signed at Washington, D.C., this 19th day of December 2008.

David M. Spooner,

Assistant Secretary of Commerce for Import Administration, Alternate Chairman, Foreign–Trade Zones Board.

Attest:

Andrew McGilvray,

Executive Secretary.

[FR Doc. E8–31169 Filed 12–30–08; 8:45 am]

BILLING CODE 3510–DS–S

DEPARTMENT OF COMMERCE

INTERNATIONAL TRADE ADMINISTRATION

[A–570–827]

Certain Cased Pencils from the People's Republic of China: Extension of Time Limit for Preliminary Results of the Antidumping Duty Administrative Review

AGENCY: Import Administration, International Trade Administration, Department of Commerce.

EFFECTIVE DATE: December 22, 2008

FOR FURTHER INFORMATION CONTACT: Alexander Montoro at (202) 482–0238 or Shane Subler at (202) 482–0189; AD/CVD Operations, Office 1, Import Administration, International Trade Administration, U.S. Department of Commerce, 14th Street and Constitution Avenue, NW, Washington, DC 20230.

SUPPLEMENTARY INFORMATION:

Background

On January 28, 2008, the Department published a notice of initiation of administrative review of the antidumping duty order on certain cased pencils from the People's Republic of China, covering the period December 1, 2006 through November 30, 2007. *See Initiation of Antidumping and Countervailing Duty Administrative Reviews and Request for Revocation in Part*, 73 FR 4829 (January 28, 2008). The current deadline for the preliminary results of this administrative review is December 22, 2008.[1]

Statutory Time Limits

Section 751(a)(3)(A) of the Tariff Act of 1930, as amended (''the Act''), requires the Department of Commerce (''the Department'') to issue the preliminary results of an administrative

[1] On August 25, 2008, we extended the preliminary results deadline from September 2, 2008 to December 22, 2008. *See Certain Cased Pencils from the People's Republic of China: Extension of Time Limit for Preliminary Results of the Antidumping Duty Administrative Review*, 73 FR 49993 (August 25, 2008).

review within 245 days after the last day of the anniversary month of an order for which a review is requested. If it is not practicable to complete the review within the time period, section 751(a)(3)(A) of the Act allows the Department to extend this deadline to a maximum of 365 days.

Extension of Time Limit for Preliminary Results

The Department requires additional time to review and analyze the responses in this administrative review. Moreover, the Department requires additional time to analyze complex issues related to surrogate value selections. Because the Department requires additional time to analyze the information, it is not practicable to complete this review within the anticipated time limit (*i.e.* December 22, 2008). Therefore, the Department is extending the time limit for completion of the preliminary results by an additional eight days (for a total extension of 120 days) to not later than December 30, 2008, in accordance with section 751(a)(3)(A) of the Act.

We are issuing this notice in accordance with sections 751(a)(3)(A) of the Act.

Dated: December 22, 2008.

Stephen Claeys,

Deputy Assistant Secretary for Antidumping and Countervailing Duty Operations.

[FR Doc. E8–31174 Filed 12–30–08; 8:45 am]

BILLING CODE 3510–DS–S

DEPARTMENT OF COMMERCE

International Trade Administration

[A–475–818]

Certain Pasta from Italy: Notice of Extension of Final Results of Antidumping Duty Changed Circumstances Review

AGENCY: Import Administration, International Trade Administration, Department of Commerce.

EFFECTIVE DATE: December 31, 2008.

FOR FURTHER INFORMATION CONTACT: Eric B. Greynolds, AD/CVD Operations, Office 3, Import Administration, International Trade Administration, U.S. Department of Commerce, Room 4014, 14th Street and Constitution Ave., NW, Washington, DC 20230, telephone: (202) 482–6071.

SUPPLEMENTARY INFORMATION:

Background

On November 19, 2007, the Department of Commerce (the Department) published its notice of initiation of antidumping duty (AD) changed circumstances review (CCR). *See Certain Pasta from Italy: Notice of Initiation of Antidumping Duty Changed Circumstances Review*, 72 FR 65010 (November 19, 2007). On February 22, 2008, the Department published its notice of preliminary results of AD CCR and intent to reinstate the AD order. *See Certain Pasta from Italy: Notice of Preliminary Results of Antidumping Duty Changed Circumstances Review and Intent to Reinstate the Antidumping Duty Order*, 73 FR 9769 (February 22, 2008). On August 12, 2008, the Department extended the due date of the final results of the AD CCR until October 6, 2008. *See Certain Pasta from Italy: Notice of Extension of Final Results of Antidumping Duty Changed Circumstances Review*, 73 FR 46871 (August 12, 2008). On September 29, 2008, the Department placed on the record of the AD CCR press releases from the United States Attorney for the Western District of Missouri and the Securities and Exchange Commission (SEC) regarding the American Italian Pasta Company (AIPC). *See* the Memorandum to the File from Eric B. Greynolds, Program Manager, ''Press Release from Office of the United States Attorney for the Western District of Missouri and the Securities and Exchange Commission Regarding the American Italian Pasta Company'' (September 29, 2008), a public document on file in the Central Records Unit (CRU), room 1117 of the main Department building. On October 8, 2008, David M. Spooner, the Assistant Secretary for Import Administration, along with other officials from the Department met with an official from AIPC and counsel to Lensi/AIPC to discuss issues pertaining to the ongoing AD CCR. On October 10, 2008, the Department extended the due date of the final results of the AD CCR until December 5, 2008. *See Certain Pasta from Italy: Notice of Extension of Final Results of Antidumping Duty Changed Circumstances Review*, 73 FR 60239 (October 10, 2008). On October 17, 2008, Lensi/AIPC submitted comments regarding the press release issued by the SEC and the Office of the United States Attorney for the Western District of Missouri. On December 12, 2008, the Department extended the due date of the final results of the AD CCR until December 22, 2008. *See Certain Pasta from Italy: Notice of Extension of Final Results of Antidumping Duty Change Circumstances Review*, 73 FR 75671 (December 12, 2008).

Extension of Time Limit for Final Results

Under 19 CFR 351.216(e), the Department will issue the final results of a CCR within 270 days after the date on which the Department initiates the changed circumstances review. Currently, the final results of the AD CCR, which cover Lensi, a producer/exporter of pasta from Italy, and AIPC, Lensi's corporate parent and importer of subject merchandise produced by Lensi, are due by December 22, 2008. As explained above, the Department has placed certain information regarding Lensi on the record of the AD CCR. The Department finds that it requires additional time to review the new factual information contained in the October 17, 2008 submission of Lensi and AIPC. Therefore, in order to have sufficient time to review the new factual information placed on the record of the AD CCR, we are extending the due date of the final results of the AD CCR by 11 days in accordance with 19 CFR 351.302(b). Therefore, the final results of the AD CCR are now due no later than January 2, 2009.

This notice is issued and published in accordance with sections 751(b) and 777(i) of the Tariff Act of 1930, as amended.

Dated: December 19, 2008.

Stephen J. Claeys,

Deputy Assistant Secretary for Antidumping and Countervailing Duty Operations.

[FR Doc. E8–31145 Filed 12–30–08; 8:45 am]

BILLING CODE 3510–DS–S

DEPARTMENT OF COMMERCE

International Trade Administration

(A–580–809)

Circular Welded Non–Alloy Steel Pipe from the Republic of Korea: Initiation of New Shipper Antidumping Duty Review

AGENCY: Import Administration, International Trade Administration, Department of Commerce.

SUMMARY: On November 28, 2008, the Department of Commerce (''the Department'') received a request for a new shipper review of the antidumping duty order on circular welded non–alloy steel pipe from the Republic of Korea (''Korea''). In accordance with section 751(a)(2)(B) of the Tariff Act of 1930, as amended (''the Act''), and 19 CFR 351.214(d), we are initiating an antidumping new shipper review of A–JU Besteel Co., Ltd. (''Ajubesteel'') for the period November 1, 2007 through October 31, 2008.

EFFECTIVE DATE: December 31, 2008.

FOR FURTHER INFORMATION CONTACT: Shane Subler or Joe Shuler, AD/CVD Operations, Office 1, Import Administration, International Trade Administration, U.S. Department of Commerce, 14th Street and Constitution Avenue, NW, Washington, DC 20230; telephone: (202) 482–0189 or (202) 482–1293, respectively.

SUPPLEMENTARY INFORMATION:

Background

The Department received a timely request from Ajubesteel, in accordance with 19 CFR 351.214(c), for a new shipper review of the antidumping duty order on circular welded non–alloy steel pipe from Korea, which has a November anniversary month.[1] Pursuant to 19 CFR 351.214(b), Ajubesteel certified that it is both an exporter and producer of the subject merchandise, that it did not export subject merchandise to the United States during the period of investigation (''POI'') (April 1, 1991, through September 30, 1991), and that since the investigation was initiated, it has never been affiliated with any exporter or producer who exported the subject merchandise to the United States during the POI. Ajubesteel also submitted documentation establishing the date on which the subject merchandise was first entered for consumption, the volume shipped, and the date of its first sale to an unaffiliated customer in the United States.

Initiation of New Shipper Review

In accordance with section 751 (a)(2)(B) of the Act and 19 CFR 351.214(d), we are initiating a new shipper review of the antidumping duty order on Circular Welded Non–Alloy Steel Pipe from Korea (produced and exported) by Ajubesteel. *See* Memorandum to the File through Susan Kuhbach, Director, AD/CVD Operations Office 1, Import Administration from the Team, ''New Shipper Review Initiation Checklist,'' dated December 12, 2008, on file in the Central Records Unit, room 1117, of the main Department of Commerce building. This review covers the period from November 1, 2007 through October 31, 2008, in accordance with 19 CFR 351.214(g)(1)(i)(A). We intend to issue the preliminary results of this review no later than 180 days after the date on which this review is initiated, and the final results within 90 days after the date on which we issue the preliminary results. *See* section 751(a)(2)(B)(iv) of the Act.

On August 17, 2006, the Pension Protection Act of 2006 (H.R. 4) was signed into law. Section 1632 of H.R. 4 temporarily suspends the authority of the Department to instruct U.S. Customs and Border Protection to collect a bond or other security in lieu of a cash deposit in new–shipper reviews. Therefore, the posting of a bond under section 751(a)(2)(B)(iii) of the Act and 19 CFR 351.214(e) in lieu of a cash deposit is not available in this case. Importers of subject merchandise manufactured and exported by Ajubesteel must continue to pay a cash deposit of estimated antidumping duties on each entry of subject merchandise at the current all–others rate of 4.80 percent. *See Circular Welded Non–Alloy Steel Pipe From the Republic of Korea; Final Results of Administrative Review*, 69 FR 32492 (June 10, 2004).

Interested parties may submit applications for disclosure under administrative protective order in accordance with 19 CFR 351.305 and 351.306.

This initiation and notice are in accordance with section 751(a)(2)(B) of the Act and 19 CFR 351.214(d).

Dated: December 22, 2008.

Stephen J. Claeys,

Deputy Assistant Secretary for Antidumping and Countervailing Duty Operations.

[FR Doc. E8–31173 Filed 12–30–08; 8:45 am]

BILLING CODE 3510–DS–S

[1] *See Notice of Antidumping Orders: Certain Circular Welded Non-Alloy Steel Pipe from Brazil, the Republic of Korea (Korea), Mexico, and Venezuela, and Amendment to Final Determination of Sales at Less Than Fair Value: Certain Circular Welded Non-Alloy Steel Pipe from Korea*, 57 FR 49453 (November 2, 1992).

DEPARTMENT OF COMMERCE

International Trade Administration

[A–570–901]

Certain Lined Paper Products from the People's Republic of China: Extension of Time Limits for Final Results of Antidumping Duty Administrative Review

AGENCY: Import Administration, International Trade Administration, Department of Commerce.

EFFECTIVE DATE: December 31, 2008.

FOR FURTHER INFORMATION CONTACT: Cindy Robinson, AD/CVD Operations, Office 3, Import Administration, International Trade Administration, U.S. Department of Commerce, 14th Street and Constitution Avenue, NW, Washington, DC 20230, telephone: (202) 482–3797.

SUPPLEMENTARY INFORMATION:

Background

On October 31, 2007, the U.S. Department of Commerce (''Department'') published a notice of initiation of the administrative review of the antidumping duty order on certain lined paper products from the People's Republic of China, covering the period April 17, 2006 to August 31, 2007. *See Initiation of Antidumping and Countervailing Duty Administrative Reviews*, 72 FR 61621 (October 31, 2007). On October 7, 2008, the Department published the preliminary results of this review. *See Certain Lined Paper Products from the People's Republic of China: Notice of Preliminary Results of the Antidumping Duty Administrative Review*, 73 FR 58540 (October 7, 2008). The final results of this review are currently due no later than February 4, 2009.

Extension of Time Limit of Final Results

Section 751(a)(3)(A) of the Tariff Act of 1930, as amended (''Act''), requires the Department to issue the final results of a review within 120 days after the date on which the preliminary results are published. However, if it is not practicable to complete the review within that time period, section 751(a)(3)(A) of the Act allows the Department to extend the time limit for the final results to a maximum of 180 days. *See also* 19 CFR 351.213(h)(2).

We determine that it is not practicable to complete the final results of this review within the original time limit because several technical issues have arisen. The mandatory respondent and its suppliers have complex cost allocation issues, which require the Department to further clarify and analyze a significant amount of information associated with the factors of production and manufacturing costs. Thus, additional time is necessary to complete the final results. Therefore, the Department is fully extending the final results by 60 days. The final results are now due not later than April 5, 2009. As this date falls on a Sunday, the final results are due April 6, 2009. *See Notice of Clarification: Application of ''Next Business Day'' Rule for Administrative Determination Deadlines Pursuant of the Tariff Act of 1930, As Amended*, 70 FR 24533 (May 10, 2005).

This extension is in accordance with section 751(a)(3)(A) of the Act and 19 CFR 351.213(h)(2).

Dated: December 18, 2008.

Stephan J. Claeys,

Deputy Assistant Secretary for Antidumping and Countervailing Duty Operations.

[FR Doc. E8–31139 Filed 12–30–08; 8:45 am]

BILLING CODE 3510–DS–S

DEPARTMENT OF COMMERCE

National Oceanic and Atmospheric Administration

RIN 0648–XM39

Marine Mammals; File No. 704–1698

AGENCY: National Marine Fisheries Service (NMFS), National Oceanic and Atmospheric Administration (NOAA), Commerce.

ACTION: Notice; issuance of permit amendment.

SUMMARY: Notice is hereby given that The University of Alaska Museum, 907 Yukon Drive, P.O. Box 756960, Fairbanks, AK 99775 (Dr. Link Olsen, Responsible Party) has been issued an amendment to scientific research Permit No. 704–1698–00.

ADDRESSES: The amendment and related documents are available for review upon written request or by appointment in the following office(s):

Permits, Conservation and Education Division, Office of Protected Resources, NMFS, 1315 East-West Highway, Room 13705, Silver Spring, MD 20910; phone (301)713–2289; fax (301)427–2521; and

Alaska Region, NMFS, P.O. Box 21668, Juneau, AK 99802–1668; phone (907)586–7221; fax (907)586–7249.

FOR FURTHER INFORMATION CONTACT: Amy Sloan or Jennifer Skidmore, (301)713–2289.

SUPPLEMENTARY INFORMATION: The requested amendment has been granted under the authority of the Marine Mammal Protection Act of 1972, as amended (16 U.S.C. 1361 *et seq.*), the regulations governing the taking and importing of marine mammals (50 CFR part 216), the Endangered Species Act of 1973, as amended (ESA; 16 U.S.C. 1531 *et seq.*), the regulations governing the taking, importing, and exporting of endangered and threatened species (50 CFR parts 222–226), and the Fur Seal Act of 1966, as amended (16 U.S.C. 1151 *et seq.*).

The amendment (No. 704–1698–01) extends the expiration date of the permit from December 31, 2008 to December 31, 2009.

Issuance of this permit amendment, as required by the ESA, was based on a finding that such amendment: (1) was applied for in good faith; (2) will not operate to the disadvantage of such endangered species; and (3) is consistent with the purposes and policies set forth in section 2 of the ESA.

Dated: December 23, 2008.

P. Michael Payne,

Chief, Permits, Conservation and Education Division, Office of Protected Resources, National Marine Fisheries Service.

[FR Doc. E8–31147 Filed 12–30–08; 8:45 am]

BILLING CODE 3510–22–S

DEPARTMENT OF COMMERCE

National Oceanic and Atmospheric Administration

RIN 0648–XM41

North Pacific Fishery Management Council; Public Meeting

AGENCY: National Marine Fisheries Service (NMFS), National Oceanic and Atmospheric Administration (NOAA), Commerce.

ACTION: Notice of a public meeting.

SUMMARY: The North Pacific Fishery Management Council's (Council) Salmon Bycatch Workgroup will meet in Anchorage, AK.

DATES: The meeting will be held on January 20, 2009, from 10 a.m. to 5 p.m.

ADDRESSES: The meeting will be held at the Hilton Hotel, 500 West 3rd Avenue, Fireweed Room, Anchorage AK.

Council address: North Pacific Fishery Management Council, 605 W. 4th Ave., Suite 306, Anchorage, AK 99501–2252.

FOR FURTHER INFORMATION CONTACT: Diana Stram, Council staff; telephone: (907) 271–2809

SUPPLEMENTARY INFORMATION: The Committee will review industry proposals for incentive-based salmon bycatch reduction programs in conjunction with the Council's forthcoming action on Chinook salmon bycatch management measures. The Committee will receive presentations and then provide their written comments and recommendations on these proposals to the Council for its consideration.

Although non-emergency issues not contained in this agenda may come before this group for discussion, those issues may not be the subject of formal action during this meeting. Action will be restricted to those issues specifically listed in this notice and any issues arising after publication of this notice that require emergency action under section 305(c) of the Magnuson-Stevens Fishery Conservation and Management Act, provided the public has been notified of the Council's intent to take final action to address the emergency.

Special Accommodations

This meeting is physically accessible to people with disabilities. Requests for sign language interpretation or other auxiliary aids should be directed to Gail Bendixen at (907) 271–2809 at least 7 working days prior to the meeting date.

Dated: December 24, 2008.

Tracey L. Thompson,

Acting Director, Office of Sustainable Fisheries, National Marine Fisheries Service.

[FR Doc. E8–31075 Filed 12–30–08; 8:45 am]

BILLING CODE 3510–22–S

COMMODITY FUTURES TRADING COMMISSION

Request To Exempt Certain Over-the-Counter Swaps From Certain of the Requirements Imposed by Commission Regulation 35.2, Pursuant to the Authority in Section 4(C) of the Commodity Exchange Act; Reopening of Comment Period

AGENCY: Commodity Futures Trading Commission.

ACTION: Notice of request for comment on exemption request; reopening of comment period.

SUMMARY: The Commodity Futures Trading Commission (''Commission'') is reopening the period for public comment to provide interested persons additional time to comment on whether to exempt certain over-the-counter (''OTC'') agricultural swaps from certain of the requirements otherwise imposed by Commission Regulation 35.2. The comment period is being reopened due to the non-transmittal of a comment letter from the Federal eRulemaking Portal to the Commission. The purpose of the Commission's action is to afford the commenter whose submission was not received, the opportunity to resubmit the comment. The Chicago Mercantile Exchange Inc. (''CME''), a registered derivatives clearing organization, and the Board of Trade of the City of Chicago, Inc. (''CBOT''), a designated contract market, requested an exemption that would permit the clearing of OTC agricultural swaps. Authority for extending this relief is found in Section 4(c) of the Commodity Exchange Act.[1]

DATES: Comments must be received on or before January 21, 2009.

[1] 7 U.S.C. 6(c).

ADDRESSES: Comments may be submitted by any of the following methods:

- *Federal eRulemaking Portal: http://www.regulations.gov/http://frwebgate.access.gpo/cgi-bin/leaving.* Follow the instructions for submitting comments.
- *E-mail: secretary@cftc.gov.* Include ''CME/CBOT Section 4(c) Petition'' in the subject line of the message.
- *Fax:* 202–418–5521.
- *Mail:* Send to David A. Stawick, Secretary, Commodity Futures Trading Commission, Three Lafayette Centre, 1155 21st Street, NW., Washington, DC 20581.
- *Courier:* Same as mail above.

All comments received will be posted without change to *http://www.cftc.gov.*

FOR FURTHER INFORMATION CONTACT: Sarah E. Josephson, Special Counsel, 202–418–5684, *sjosephson@cftc.gov*, or Phyllis P. Dietz, Associate Director, 202–418–5449, *pdietz@cftc.gov*, Division of Clearing and Intermediary Oversight, Commodity Futures Trading Commission, Three Lafayette Centre, 1155 21st Street, NW., Washington, DC 20581.

SUPPLEMENTARY INFORMATION:

I. General Information

Pursuant to the E-Government Act of 2002, Pub. L. 107–347, in January 2003, the interagency eRulemaking Program launched *http://www.regulations.gov* (the Federal eRulemaking Portal) to provide citizens with an online portal to learn about proposed regulations and to submit comments. The Commission receives comments through five distinct methods, including the Federal eRulemaking Portal.

During the time from March 22, 2008 through September 8, 2008, the Federal eRulemaking Portal experienced a software problem resulting in the non-transmittal of some public comments. The software error affected only a few federal agencies. The eRulemaking Program informed the Commission that one comment regarding CME and CBOT's requested 4(c) exemption to permit clearing of OTC corn basis swaps and corn, wheat, and soybean calendar swaps was not transmitted from the eRulemaking Portal to the Commission. The eRulemaking Program was unable to provide any information regarding the identity of the commenter or nature of the lost comment. It is the Commission's understanding that the transmission problem has been corrected, and safeguards are now in place to ensure this error will not occur in the future. This software problem affected none of the other methods by which the Commission accepts comments.

II. Specific Information

The Commission is reopening the period for public comment specifically to afford the commenter, whose submission was not received, the opportunity to resubmit the comment. In addition, any other member of the public may submit a comment during the reopened comment period. The original notice of request for public comment was published on July 7, 2008, and the comment period closed on August 21, 2008. Please refer to 73 FR 38403 (July 7, 2008) for the original notice and refer to the Commission Web site (*http://www.cftc.gov*) to view the exemption request and comments submitted and received as of the publication of this notice.

Issued in Washington, DC, on December 24, 2008 by the Commission.

David A. Stawick,

Secretary of the Commission.

[FR Doc. E8–31132 Filed 12–30–08; 8:45 am]

BILLING CODE 6351–01–P

DEPARTMENT OF DEFENSE

Office of the Secretary

[Docket ID: DoD–2008–HA–0167]

Proposed Collection; Comment Request

AGENCY: Office of the Assistant Secretary of Defense for Health Affairs, DoD.

ACTION: Notice.

In compliance with section 3506(c)(2)(A) of the *Paperwork Reduction Act of 1995,* the Office of the Assistant Secretary of Defense for Health Affairs announces a proposed public information collection and seeks public comment on the provisions thereof. Comments are invited on: (a) Whether the proposed collection of information is necessary for the proper performance of the functions of the agency, including whether the information shall have practical utility; (b) the accuracy of the agency's estimate of the burden of the proposed information collection; (c) ways to enhance the quality, utility, and clarity of the information to be collected; and (d) ways to minimize the burden of the information collection on respondents, including through the use of automated collection techniques or other forms of information technology.

DATES: Consideration will be given to all comments received by March 2, 2009.

ADDRESSES: You may submit comments, identified by docket number and title, by any of the following methods:

- *Federal eRulemaking Portal: http://www.regulations.gov.* Follow the instructions for submitting comments.
- *Mail:* Federal Docket Management System Office, 1160 Defense Pentagon, Washington, DC 20301–1160.

Instructions: All submissions received must include the agency name, docket number and title for this **Federal Register** document. The general policy for comments and other submissions from members of the public is to make these submissions available for public viewing on the Internet at *http://www.regulations.gov* as they are received without change, including any personal identifiers or contact information.

FOR FURTHER INFORMATION CONTACT: To request more information on this proposed information collection or to obtain a copy of the proposal and associated collection instruments, please write to Lt. Col. Judith Schulik, TRICARE Policy and Operations, TRICARE Management Activity, 5111 Leesburg Pike, Suite 810, Falls Church, VA 22041, telephone (703) 681–0039.

Title; Associated Form; and OMB Number: Certification of non-contributory TRICARE supplemental insurance plan; OMB Control Number 0720–TBD.

Needs and Uses: Section 707 of the John Warner National Defense Authorization Act for Fiscal Year 2007 added section 1097c to Title 10. Section 1097c prohibits employers from offering financial or other incentives to certain TRICARE-eligible employees to not enroll in an employer-offered group-health plan. In other words, employers may no longer offer TRICARE supplemental insurance plans as part of an employee benefit package. Employers may, however, offer TRICARE supplemental insurance plans as part of an employee benefit package provided the plan is not paid for in whole or in part by the employer and is not endorsed by the employer. When such TRICARE supplemental plans are offered, the employer must properly document that they did not provide any payment for the benefit nor receive any direct or indirect consideration or compensation for offering the benefit; the employer's only involvement is providing the administrative support. That certification will be provided upon request to the Department of Defense.

Affected Public: Business or other for profit; Not-for-profit institutions.

Annual Burden Hours: 250.

Number of Respondents: 1,500.

Responses per Respondent: 1.

Average Burden per Response: 10 minutes.

Frequency: On occasion.

SUPPLEMENTARY INFORMATION:

Summary of Information Collection

Respondents are employers who make available non-contributory TRICARE supplemental insurance plan to their employees. This new paperwork requirement is consistent with section 707 of the John Warner National Defense Authorization Act for Fiscal Year 2007 which added Section 1097c to Title 10. Per Section 1097c, employers may no longer offer TRICARE supplemental insurance plans as part of an employee benefit package. They may offer TRICARE supplemental insurance plans, however, provided the plan is not paid for in whole or in part by the employer and is not endorsed by the employer. When such TRICARE supplemental plans are offered, the employer must properly document that they did not provide any payment for the benefit nor receive any direct or indirect consideration or compensation for offering the benefit; the employer's only involvement is providing the administrative support. One certification must be completed per employer. It should be kept on file by the employer for as long as such plans are offered. The employer will provide the certification to the Department of Defense upon request.

Dated: December 22, 2008.

Patricia L. Toppings,

OSD Federal Register Liaison Officer, Department of Defense.

[FR Doc. E8–31046 Filed 12–30–08; 8:45 am]

BILLING CODE 5001–06–P

DEPARTMENT OF DEFENSE

Office of the Secretary

[Docket ID: DoD–2008–HA–0168]

Proposed Collection; Comment Request

AGENCY: Office of the Assistant Secretary of Defense for Health Affairs, DoD.

ACTION: Notice.

In compliance with section 3506(c)(2)(A) of the *Paperwork Reduction Act of 1995,* the Office of the Assistant Secretary of Defense for Health Affairs announces the proposed extension of a public information collection and seeks public comment on the provisions thereof. Comments are invited on: (a) Whether the proposed collection of information is necessary for the proper performance of the functions of the agency, including whether the information shall have practical utility; (b) the accuracy of the agency's estimate of the burden of the proposed information collection; (c) ways to enhance the quality, utility, and clarity of the information to be collected; and (d) ways to minimize the burden of the information collection on respondents, including through the use of automated collection techniques or other forms of information technology.

DATES: Consideration will be given to all comments received by March 2, 2009.

ADDRESSES: You may submit comments, identified by docket number and title, by any of the following methods:

- *Federal eRulemaking Portal: http://www.regulations.gov.* Follow the instructions for submitting comments.
- *Mail:* Federal Docket Management System Office, 1160 Defense Pentagon, Washington, DC 20301–1160.

Instructions: All submissions received must include the agency name, docket number and title for this **Federal Register** document. The general policy for comments and other submissions from members of the public is to make these submissions available for public viewing on the Internet at *http://www.regulations.gov* as they are received without change, including any personal identifiers or contact information.

FOR FURTHER INFORMATION CONTACT: To request more information on this proposed information collection or to obtain a copy of the proposal and associated collection instruments, please write to Naval Health Research Center, DoD Center for Deployment Health Research, Department 164, ATTN: Tyler C. Smith, MS, PhD, 140 Sylvester Rd., San Diego, CA 92106–3521, or call (619) 553–7593.

Title; Associated Form; and OMB Number: Prospective Department of Defense Studies of U.S. Military Forces: The Millennium Cohort Study—OMB Control Number 0720–0029.

Needs and Uses: The Millennium Cohort Study responds to recent recommendations by Congress and by the Institute of Medicine to perform investigations that systematically collect population-based demographic and health data so as to track and evaluate the health of military personnel throughout the course of their careers and after leaving military service.

Affected Public: Civilians, formerly Active Duty and activated Reservists in the U.S. Military, who enrolled and participated in Panels 1, 2, and 3 of the Millennium Cohort Study.

Annual Burden Hours: 9,150.

Number of Respondents: 36,599.

Responses per Respondent: 1.

Average Burden per Response: 45 minutes.

Frequency: Every 3 years.

SUPPLEMENTARY INFORMATION:

Summary of Information Collection

Persons eligible to respond to this survey are those civilians now separated from military service who initially enrolled, gave consent and participated in the Millennium Cohort Study while on active duty in the Army, Navy, Air Force, Marine Corps or U.S. Coast Guard during the first, second, or third panel enrollment periods in 2001–2003, 2004–2006, or 2007–2008, respectively.

Dated: December 22, 2008.

Patricia L. Toppings,

OSD Federal Register Liaison Officer, Department of Defense.

[FR Doc. E8–31047 Filed 12–30–08; 8:45 am]

BILLING CODE 5001–06–P

DEPARTMENT OF DEFENSE

Office of the Secretary

Announcement of Federal Funding Opportunity

AGENCY: Office of Economic Adjustment, DoD.

ACTION: Notice.

SUMMARY: This notice announces the opportunity to enter into a cooperative agreement with the Office of Economic Adjustment (OEA) for Research and Technical Assistance (RTA) and invites proposals. The OEA is authorized by 10 U.S.C. 2391, to make grants to, or conclude cooperative agreements or enter into contracts with, a State or local government or any private entity to conduct research and provide technical assistance in support of the Defense Economic Adjustment Program, and assist communities, businesses and workers responding to Defense changes under 10 U.S.C. 2391 and Executive Order 12788, as amended. OEA is the Department of Defense's primary source for assisting communities that are adversely impacted by Defense program changes, including base closures or realignments, base expansions, and contract or program cancellations. Awards provided under this announcement support the Defense Economic Adjustment Program by: (1) Providing analysis and dissemination of information; and (2) support to innovative approaches.

DATES: OEA will hold a pre-proposal teleconference on Tuesday, January 27,

2009, at 3 p.m. EST in which all interested respondents are invited to participate. A completed proposal must be received by OEA no later than sixty (60) days after the publication date of this announcement. Any proposal received after this time will be considered non-responsive and the respondent will not be invited to make a formal application for funding. OEA will invite the successful respondent(s) to apply for funding under this announcement following its review of proposals and determination of eligible respondents, which will occur subsequent to the 61st day following publication of this announcement.

ADDRESSES: All interested respondents are to submit a proposal within the advertised solicitation period (sixty (60) days). Proposals may be submitted to OEA by e-mail, hand-delivery, or postal mail. Send submissions to the Director, Office of Economic Adjustment, by mail to 400 Army Navy Drive, Suite 200, Arlington, VA 22202–4704, by facsimile to OEA at (703) 604–5460, or electronically to: *rta.submit@wso.whs.mil.*

A pre-proposal teleconference will be held on Tuesday, January 27, 2009, at 3 p.m. EST to review the goals and objectives of this funding opportunity and answer questions from interested respondents. For the teleconference number and passcode, interested respondents may contact OEA Office of Economic Adjustment, 400 Army Navy Drive, Suite 200, Arlington, VA 22202–4704; telephone: (703) 604–6020; fax: (703) 604–5843; E-mail: *daniel.glasson@wso.whs.mil.*

FOR FURTHER INFORMATION CONTACT: Daniel Glasson, (703) 604–6020.

SUPPLEMENTARY INFORMATION:

Federal Funding Opportunity Title: Research and Technical Assistance.

Announcement Type: Federal Funding Opportunity (FFO).

Catalog of Federal Domestic Assistance (CFDA) Number: 12.615.

I. Funding Opportunity Description

OEA, a Department of Defense (DoD) Field Activity, is authorized to make grants to, or conclude cooperative agreements or enter into contracts with, state or local governments or any private entity, to conduct research and provide technical assistance in support of its program activities under 10 U.S.C. 2391 and Executive Order 12788, as amended.

1. *Description of opportunity*—Pursuant to the Research and Technical Assistance program, OEA is soliciting proposals that will result in one or more cooperative agreements to provide economic indicators on a recurring basis to certain Defense-impacted locations engaged in defense economic adjustment. Currently, OEA works with communities/regions experiencing base closure, realignment, and mission growth. Implementation of a community's plan to redevelop surplus property (base closure) or address public requirements associated with mission growth may be impacted by changing economic conditions, including, but not limited to, declining home values, rising unemployment, labor surplus areas, declining tax revenue, and housing/business starts. Specifically, OEA is seeking proposals to provide information to its program customer base on: (1) Adjusted monthly economic data for regions hosting the military installations listed below; and (2) a national baseline for identified economic indicators. This information will be developed with and for the affected communities, and posted on the Internet to further assist OEA's community, state and other customers in the coordination and delivery of adjustment assistance. OEA desires to have the first set of information to the specific communities/regions by Summer 2009, with periodic updates to extend through September 2013.

2. *Additional Information*—The research and data must be dynamic, in that it will be updated on a periodic basis to reflect current local economic situations across a portfolio of regions. Respondents will be expected to engage the identified communities and provide specific information developed by the project directly to the respective communities. OEA encourages respondents to consider partnering with public, private, and higher education sources for existing economic data or techniques for adjusting economic data to reflect local conditions.

3. *List of military installations where regional economic data is sought*—(OEA reserves the right to add to or change this list.)

Base name	State
Aberdeen Proving Ground	MD
Andrews Air Force Base	MD
Army Reserve Personnel Command St. Louis.	MO
Brooks City Base	TX
Buckley Air Force Base Annex	CO
Cannon Air Force Base	NM
Charles E. Kelly Support Facility	PA
Deseret Chemical Depot	UT
Eglin Air Force Base	FL
Fort Belvoir	VA
Fort Benning	GA
Fort Bliss	TX
Fort Bragg/Pope Air Force Base	NC
Fort Carson	CO
Fort Drum	NY
Fort Gillem	GA
Fort Hood	TX
Fort Knox	KY
Fort Lee	VA
Fort Lewis/McChord Air Force Base	WA
Fort McPherson	GA
Fort Meade	MD
Fort Monmouth	NJ
Fort Monroe	VA
Fort Polk	LA
Fort Riley	KS
Fort Sam Houston	TX
Fort Sill	OK
Fort Stewart/Hunter Army Air Field	GA
Four Lakes Combat Support	WA
Galena Forward Operating Location	AK
Grand Forks Air Force Base	ND
Guam Military Complex	Guam
Kansas Army Ammunition Plant	KS
Marine Corps Base Camp Lejeune/Marine Corps Air Station New River/Marine Corps Air Station Cherry Point.	NC
Marine Corps Base Quantico	VA
Naval Air Station Brunswick	ME
Naval Air Station Corpus Christi/Naval Station Ingleside.	TX
Naval Air Station Willow Grove	PA
Naval Medical Center Bethesda	MD
Naval Station Pascagoula	MS
Naval Supply Corps School Athens	GA
Naval Support Activity Crane	IN
Naval Support Activity New Orleans	LA
Naval Weapons Station Seal Beach Concord Detachment.	CA
Newport Chemical Depot	IN
Onizuka Air Force Station	CA
Red River Army Depot/Lone Star Army Ammunition Plant.	TX
Redstone Arsenal	AL
Riverbank Army Ammunition Plant	CA
Rock Island Arsenal	IL
Selfridge Army Activity	MI
Sheppard Air Force Base	TX
Umatilla Army Depot	OR
Walter Reed Army Medical Center	DC
White Sands Missile Range	NM

II. Award Information

OEA is accepting proposals for Research and Technical Assistance award(s). Proposals should pertain to the identified areas of interest and will be rated on content (relevance and appropriateness to OEA's core functions, qualifications of project personnel, responsiveness to this announcement, and budget). OEA will invite successful respondent(s) to enter into a cooperative agreement under this announcement following its review of proposals and determination of eligible respondents which will occur subsequent to the 61st day following publication of this announcement.

III. Eligibility Information

Eligible respondents include any State or local government or private entity.

Eligible activities include research and technical assistance that pertains to activities related to the Defense Economic Adjustment Program aimed at assisting communities, businesses, and workers affected by Defense changes under 10 U.S.C. 2391 and Executive Order 12788, as amended. OEA specifically seeks proposals on:

- Research leading to the recurring presentation of current local economic indicator data for regions impacted by Defense downsizing or mission growth, based on the two elements identified in section I, subsection 1 of this announcement.

Proposals outside the identified areas of interest will not be considered.

IV. Application and Submission Information

The process requires each interested respondent to submit a proposal within the advertised solicitation period (sixty (60) days). OEA will hold a pre-application teleconference on Tuesday, January 27, 2009, at 3 p.m. EST in which all prospective respondents are invited to participate. OEA will make a brief presentation that reviews the goals and objectives of the RTA funding opportunity and will answer questions from the teleconference participants. For the teleconference number and passcode, interested parties may contact OEA as specified in section VII.

Each proposal submitted must include a cover or transmittal letter and accompanying text that shall consist of no more than 10 pages (single-sided), comprising:

- An abstract of the proposed research or technical assistance;
- A description of the scope of work required to address the challenge identified to include:
  - Specific economic indicators or types of indicators proposed to be obtained or developed to reflect near real-time economic conditions;
  - Methods for obtaining or developing the indicators;
  - The respondent's plan for engaging the impacted communities for each of the listed installations during development of the information and for evaluating the usefulness of information provided;
  - Methods for distributing the information to the impacted communities.
- A proposed budget and accompanying budget justification;
- Detailed description of the project team and their relevant experience;
- A project schedule for completion of the work;
- A point of contact.

Proposals must be provided to: Director, Office of Economic Adjustment, by mail to 400 Army Navy Drive, Suite 200, Arlington, VA 22202–4704, by facsimile to OEA at (703) 604–5460, or electronically to: *rta.submit@wso.whs.mil.*

V. Application Review Information

1. *Selection Criteria*—In reviewing proposals under this Notice, OEA considers and equally weights each of the following factors as a basis for inviting applications:

- Overall conformance with proposal requirements;
- Overall quality of proposed research;
- Overall expertise, experience, qualifications and ability of investigators; and
- Overall reasonableness of budgeted expenditures.

2. *Review and Selection Process*—OEA will assign a Project Manager and notify respondent(s) as soon as practicable following its review of proposals and determination of eligibility, to advise and assist with the preparation of an application. Applications will be reviewed for their completeness and accuracy, and, to the extent possible, an award notification will be issued within fourteen (14) days of the receipt of a complete application.

VI. Award Administration Information

1. *Award Notices*—To the extent possible, successful applicants will be notified within fourteen (14) days of the receipt at OEA of a complete application whether or not they will receive an award. Upon notification of an award, applicants will receive an award agreement, signed by the Director of OEA on behalf of DoD. Awardees must review the award agreement and indicate their consent to its terms by signing and returning it to OEA.

2. *Administrative and National Policy Requirements*—The Awardee, and any subawardee or consultant/contractor, operating under the terms of a grant or cooperative agreement shall comply with all Federal, State, and local laws including the following, where applicable: 32 CFR Part 33, ''Uniform Administrative Requirements for Grants and Cooperative Agreements to State and Local Governments''; OMB Circulars A–87, ''Cost Principles for State and Local Governments'' and the revised A–133, ''Audits of States, Local Governments and Non-Profit Organizations''; 32 CFR Part 25, ''Government-wide Debarment and Suspension (Non-procurement)''; 32 CFR Part 26, ''Drug-free Workplace''; 32 CFR, Part 32, Uniform Administrative Requirements for Grants and Agreements to Institutions of Higher Education, Hospitals, and other Non-Profit Organizations; 32 CFR, Part 34, Administrative Requirements for Grants and Agreements with For-Profit Organizations; OMB Circular A–21 Cost Principles for Educational Institutions; OMB Circular A–122, Cost Principles for Non Profit Organizations; 32 CFR Part 28, ''New Restrictions on Lobbying (Grants)''; and 2 CFR Part 175, ''Award Term for Trafficking in Persons.''

3. *Reporting*—OEA requires interim performance reports and one final performance report for each award. The performance reports will contain information on the following:

- A comparison of actual accomplishments to the objectives established for the reporting period;
- Reasons for slippage if established objectives were not met;
- Additional pertinent information when appropriate;
- A comparison of actual and projected expenditures for the period;
- The amount of awarded funds on hand at the beginning and end of the reporting period.

The final performance report must contain a summary of activities for the entire award period. All remaining required deliverables should be submitted with the final performance report. The final SF 269A, ''Financial Status Report,'' must be submitted to OEA within ninety (90) days after the end date of the award. Any funds actually advanced and not needed for award purposes shall be returned immediately to OEA.

OEA will provide a schedule for reporting periods and report due dates in the Award Agreement.

VII. Agency Contacts

For further information, to answer questions, or for help with problems, contact: Daniel Glasson, Project Manager, Office of Economic Adjustment, 400 Army Navy Drive, Suite 200, Arlington, VA 22202–4704, O: (703) 604–6020, F: (703) 604–5843, E-mail: *daniel.glasson@wso.whs.mil.*

VIII. Other Information

The Office of Economic Adjustment Internet address is *http://www.oea.gov.*

Dated: December 22, 2008.

Patricia L. Toppings,

OSD Federal Register Liaison Officer, Department of Defense.

[FR Doc. E8–31045 Filed 12–30–08; 8:45 am]

BILLING CODE 5001–06–P

DEPARTMENT OF DEFENSE

Department of the Air Force

[Docket ID: USAF–2008–0061]

Privacy Act of 1974; System of Records

AGENCY: Department of Air Force, DoD.

ACTION: Notice to Amend Seven Systems of Records.

SUMMARY: The Department of Air Force proposes to amend seven systems of records to its inventory of record systems subject to the Privacy Act of 1974 (5 U.S.C. 552a), as amended.

DATES: The changes will be effective on January 30, 2009 unless comments are received that would result in a contrary determination.

ADDRESSES: Send comments to the Air Force Privacy Act Officer, Office of Warfighting Integration and Chief Information Officer, SAF/XCISI, 1800 Air Force Pentagon, Suite 220, Washington, DC 20330–1800.

FOR FURTHER INFORMATION CONTACT: Mr. Kenneth Brodie at (703) 696–7557.

SUPPLEMENTARY INFORMATION: The Department of the Air Force systems of records notices subject to the Privacy Act of 1974, (5 U.S.C. 552a), as amended, have been published in the **Federal Register** and are available from the address above.

The specific changes to the record systems being amended are set forth below followed by the notice, as amended, published in its entirety. The proposed amendments are not within the purview of subsection (r) of the Privacy Act of 1974, (5 U.S.C. 552a), as amended, which requires the submission of a new or altered system report.

Dated: December 23, 2008.

Morgan E. Frazier,

Alternate OSD Federal Register Liaison Officer, Department of Defense.

F051 AF JA A

SYSTEM NAME:

Judge Advocate General's Professional Conduct Files (April 30, 2008, 73 FR 23434).

CHANGES:

Change System ID to ''F051 AFJA E.''

* * * * *

F051 AFJA E

SYSTEM NAME:

Judge Advocate General's Professional Conduct Files.

SYSTEM LOCATION:

Office of the Professional Responsibility Administrator, Office of the Air Force Judge Advocate General, 1420 Air Force Pentagon, Washington, DC 20330–1420;

Army-Air Force Exchange Service Headquarters, General Counsel, P.O. Box 660202, Dallas, TX 75266–0202;

Defense Commissary Agency Headquarters, General Counsel, Building P11200, Fort Lee, VA 23801; and

Defense Logistics Agency, Judge Advocate, Alexandria, VA 22310–6130.

The Judge Advocate's office at headquarters of major commands, field operating offices, and unified commands. Official mailing addresses are published as an appendix to the Air Force's compilation of systems of records notices.

National Guard Bureau, Judge Advocate's Office (NGB/JA), 1411 Jefferson Davis Highway, Arlington, VA 22202.

CATEGORIES OF INDIVIDUALS COVERED BY THE SYSTEM:

Judge advocates (active duty, reserve, or guard), civilian attorneys employed by The Judge Advocate General's Corps and civilian attorneys subject to the disciplinary authority of The Judge Advocate General who have been the subject of a complaint related to their professional conduct.

CATEGORIES OF RECORDS IN THE SYSTEM:

Records include, but are not limited to name, address, social security number (SSN); complaints with substantiating documents; letters/transcriptions of complaints, allegations and queries; letters of appointment; reports of reviews, inquiries, and investigations with supporting attachments, exhibits and photographs; records of interviews; witness statements; recommendations; reports of legal reviews of case files; reports of Advisory Committee reviews; congressional responses; memoranda; letters and reports of findings and actions taken; letters to complainants and subjects of investigations; letters of rebuttal from subjects; financial, personnel, administrative, adverse information, and technical reports.

AUTHORITY FOR MAINTENANCE OF THE SYSTEM:

10 U.S.C. 8037, Judge Advocate General, Deputy Judge Advocate General: Appointment and duties; RCM 109, Manual for Courts-Martial, 1984 and Executive Order 9397 (SSN).

PURPOSE(S):

To assist The Judge Advocate General in the evaluation, management, administration and regulation of the delivery of legal services by offices and personnel under his jurisdiction.

To ensure the proper qualifications for the practice of law are met and maintained by each attorney practicing under the direct or indirect supervision of The Judge Advocate General.

To ensure licensing agencies of the individual states (including the District of Columbia, Puerto Rico, Guam, American Samoa, the U.S. Virgin Islands and the Commonwealth of the Northern Mariana Islands), and the various courts that licensed Air Force attorneys are advised of adverse determinations documenting violations of the rules of professional responsibility affecting an attorney's fitness to practice law, this in an effort to protect the Air Force and the general public from substandard legal practitioners.

To record the disposition of professional responsibility complaints and to document professional responsibility violations and corrective action taken.

ROUTINE USES OF RECORDS MAINTAINED IN THE SYSTEM, INCLUDING CATEGORIES OF USERS AND THE PURPOSES OF SUCH USES:

In addition to those disclosures generally permitted under 5 U.S.C. 552a(b) of the Privacy Act, these records, or information contained therein, may specifically be disclosed outside the DoD as a routine use pursuant to 5 U.S.C. 552a(b)(3) as follows:

To federal and state agencies or bar associations charged with licensing and authorizing attorneys to practice law, and to various courts authorizing attorneys to practice before said courts, in order to protect the public and ensure the proper administration of justice.

To current and potential governmental employers during authorized background checks to assist their efforts to protect the public and ensure the proper administration of justice.

The 'Blanket Routine Uses' published at the beginning of the Air Force's compilation of systems of records notices apply to this system.

POLICIES AND PRACTICES FOR STORING, RETRIEVING, ACCESSING, RETAINING, AND DISPOSING OF RECORDS IN THE SYSTEM:

STORAGE:

Maintained in file folders, in computer, and on computer output products.

RETRIEVABILITY:

Retrieved by name of individual.

SAFEGUARDS:

Records are accessed by person(s) responsible for servicing the record system in performance of their official duties and by authorized personnel who are properly screened and cleared for need-to-know. Records are stored in locked rooms and cabinets. Those in computer storage devices are protected by computer system software. Computers must be accessed with a password.

RETENTION AND DISPOSAL:

Retained in office files for three (3) years after year in which case is closed. Records are destroyed by tearing into pieces, shredding, pulping, macerating or burning. Computer records are destroyed by erasing, deleting or overwriting.

SYSTEM MANAGER(S) AND ADDRESS:

Office of The Judge Advocate General, Professional Responsibility Administrator, 1420 Air Force Pentagon, Washington, DC 20330–1420.

NOTIFICATION PROCEDURE:

Individuals seeking to determine whether this system of records contains information about themselves should address written inquiries to the Office of The Judge Advocate General, Professional Responsibility Administrator, 1420 Air Force Pentagon, Washington, DC 20330–1420.

Written inquiries should include full name, mailing address, and Social Security Number (SSN).

RECORD ACCESS PROCEDURES:

Individuals seeking access to records about themselves contained in this system should address written requests to the Office of The Judge Advocate General, Professional Responsibility Administrator, 1420 Air Force Pentagon, Washington, DC 20330–1420.

Written inquiries should include full name, mailing address, and Social Security Number (SSN).

CONTESTING RECORD PROCEDURES:

The Air Force rules for accessing records, and for contesting contents and appealing initial agency determinations, are published in Air Force Instruction 37–132; 32 CFR part 806b; or may be obtained from the system manager.

RECORD SOURCE CATEGORIES:

Information is received from individuals; federal, state and local authorities; other Air Force records; state bar records; law enforcement records; educational records; complainants; inspectors; witnesses and subjects of inquiries.

EXEMPTIONS CLAIMED FOR THE SYSTEM:

Exemption (k)(2), 5 U.S.C. 552a. Investigatory material compiled for law enforcement purposes, other than material within the scope of subsection 5 U.S.C. 552a(j)(2), may be exempt pursuant to 5 U.S.C. 552a(k)(2). However, if an individual is denied any right, privilege, or benefit for which he would otherwise be entitled by Federal law or for which he would otherwise be eligible, as a result of the maintenance of the information, the individual will be provided access to the information except to the extent that disclosure would reveal the identity of a confidential source.

F051 AF JA B

SYSTEM NAME:

Confidential Financial Disclosure Report. (December 15, 2008, 73 FR 76013)

CHANGES:

Change System ID to ''F051 AFJA F.''

* * * * *

F051 AFJA F

SYSTEM NAME:

Confidential Financial Disclosure Report.

SYSTEM LOCATION:

Office of the General Counsel, Office of the Secretary of the Air Force, 1740 Air Force Pentagon, Washington, DC 20330–1740; The Judge Advocate General, Headquarters United States Air Force, 1420 Air Force Pentagon, Washington, DC 20330–1420; Headquarters of major commands and at all levels down to and including Air Force installations, and unified commands for which Air Force is Executive Agent. Official mailing addresses are published as an appendix to the Air Force's compilation of systems of records notices.

CATEGORIES OF INDIVIDUALS COVERED BY THE SYSTEM:

Civilian personnel; Air Force military personnel in the rank of colonel or below whose basic duties and responsibilities require the exercise of judgment on Government decision making or taking action on (1) the administering or monitoring of grants or subsidies, (2) contracting or procurement, (3) auditing, or (4) any other government activity in which the final decision or action has a significant economic impact on the interest of any non-federal enterprise; and special Government employees who are 'advisors' or 'consultants.' Army, Navy, Air Force, and Marine Corps active duty personnel and civilian employees in the same categories when assigned to headquarters of unified and specified commands for which Air Force is Executive Agent.

CATEGORIES OF RECORDS IN THE SYSTEM:

Contains the individual's name, Social Security Number (SSN), title of the individual's position, date of appointment in present position, agency and major organization segment of the position, employment and financial interests, creditors, interest in real property, a list of persons from whom information can be obtained concerning the individual's financial situation, supervisor's evaluation, and Standards of Conduct Counselor/Deputy Counselor review.

AUTHORITY FOR MAINTENANCE OF THE SYSTEM:

10 U.S.C. 8013, Secretary of the Air Force, 10 U.S.C. 8037, Judge Advocate General; Title I of the Ethics in Government Act of 1978 (5 U.S.C. App.); E.O. 12674, Principles of Ethical Conduct for Government Officers and Employees; 5 CFR part 2634; and E.O. 9397 (SSN).

PURPOSE(S):

Used in order to determine potential or actual conflicts of interest in the performance of official duties.

ROUTINE USES OF RECORDS MAINTAINED IN THE SYSTEM, INCLUDING CATEGORIES OF USERS AND THE PURPOSES OF SUCH USES:

In addition to those disclosures generally permitted under 5 U.S.C. 552a(b) of the Privacy Act, these records or information contained therein may specifically be disclosed outside the Department of Defense as a routine use pursuant to 5 U.S.C. 552a(b)(3) as follows:

The DoD 'Blanket Routine Uses' published at the beginning of the Air Force's compilation of systems of records notices apply to this system.

POLICIES AND PRACTICES FOR STORING, RETRIEVING, ACCESSING, RETAINING, AND DISPOSING OF RECORDS IN THE SYSTEM:

STORAGE:

Papers records in file folders and electric storage media.

RETRIEVABILITY:

Retrieved by name or Social Security Number (SSN).

SAFEGUARDS:

Records are accessed by authorized personnel as necessary to accomplish their official duties. Paper records are stored in locked rooms and cabinets. The computer storage devices are protected by computer system software.

RETENTION AND DISPOSAL:

Retained for six years after which they shall be disposed of, unless needed in an ongoing investigation. Those records retained for an ongoing investigation will be disposed of when no longer needed in the investigation. Paper records are disposed of by tearing into pieces, shredding, pulping, macerating or burning. Computer records are destroyed by deleting, erasing, degaussing, or by overwriting.

SYSTEM MANAGER(S) AND ADDRESS:

The Assistant General Counsel for Civilian Personnel and Fiscal Law, Office of the General Counsel, Office of the Secretary of the Air Force, 1740 Air Force Pentagon, Washington, DC 20330–1740

The Judge Advocate General, Headquarters United States Air Force, 1420 Air Force Pentagon, Washington, DC 20330–1420.

NOTIFICATION PROCEDURE:

Individuals seeking to determine whether this system of records contains information on themselves should address written inquiries to or visit the system manager or Deputy Standards of Conduct Counselor at any system location.

Written inquiries should include a full name, Social Security Number (SSN), address, daytime telephone number and a signature.

RECORD ACCESS PROCEDURES:

Individuals seeking to access records about themselves contained in this system should address written requests to the system manager or Deputy Standards of Conduct Counselor at any system location.

Written inquiries should include a full name, Social Security Number (SSN), address, daytime telephone number and a signature.

CONTESTING RECORD PROCEDURES:

The Air Force rules for accessing records, and for contesting contents and appealing initial agency determinations are published in Air Force Instruction 33–332; 32 CFR part 806b; or may be obtained from the system manager.

RECORD SOURCE CATEGORIES:

Information is obtained from the individual or from personnel designated by the individual.

EXEMPTIONS CLAIMED FOR THE SYSTEM:

None.

F051 AF JA C

SYSTEM NAME:

Legal Assistance Administration Records. (November 17, 2008, 73 FR 67843).

CHANGES:

Change System ID to ''F051 AFJA G.''

* * * * *

F051 AFJA G

SYSTEM NAME:

Legal Assistance Administration Records.

SYSTEM LOCATION:

The Judge Advocate General, Headquarters United States Air Force, 1420 Air Force Pentagon, Washington, DC 20330–1420–1420. At Headquarters of major commands and at all levels down to and including Air Force installations.

Official mailing addresses are published as an appendix to the Air Force's compilation of record systems notices.

CATEGORIES OF INDIVIDUALS COVERED BY THE SYSTEM:

Active duty and retired military personnel, and their dependents and Air Force civilian personnel stationed overseas.

CATEGORIES OF RECORDS IN THE SYSTEM:

Individual's name, Social Security Number (SSN), financial records, personnel files, leases, tax documents, personal letters and documents, and all other information necessary to provide advice and assistance to personnel seeking legal assistance.

AUTHORITY FOR MAINTENANCE OF THE SYSTEM:

10 U.S.C. 8013, Secretary of the Air Force; 10 U.S.C. 8037, Judge Advocate General, Deputy Judge Advocate General: Appointment and duties; Air Force Instruction 51–504, Legal Assistance, Notary, and Preventive law Programs; and E.O. 9397(SSN).

PURPOSE(S):

Records are used and maintained to provide continuing legal assistance to clients; by Department of Defense employees to complete their official duties; to manage the legal assistance program; and used to assist the client with personal legal issues.

ROUTINE USES OF RECORDS MAINTAINED IN THE SYSTEM, INCLUDING CATEGORIES OF USERS AND THE PURPOSES OF SUCH USES:

In addition to those disclosures generally permitted under 5 U.S.C. 552a(b) of the Privacy Act, these records or information contained therein may specifically be disclosed outside the DoD as a routine use pursuant to 5 U.S.C. 552a(b)(3) as follows:

The 'Blanket Routine Uses' published at the beginning of the Air Force's compilation of systems of records notices apply to this system.

POLICIES AND PRACTICES FOR STORING, RETRIEVING, ACCESSING, RETAINING, AND DISPOSING OF RECORDS IN THE SYSTEM:

STORAGE:

Paper records in file folders and electronic storage media.

RETRIEVABILITY:

Retrieved by name or Social Security Number (SSN).

SAFEGUARDS:

Records are accessed by person(s) responsible for servicing the record system in performance of their official duties and by authorized personnel who are properly screened and cleared for need-to-know. Records are stored in locked rooms and cabinets. Those in computer storage devices are protected by computer system software. Computers must be accessed with a password.

RETENTION AND DISPOSAL:

Retained in office files until superseded, obsolete, no longer needed for reference, or on inactivation, then destroyed by tearing into pieces, shredding, pulping, macerating, or burning. Computer records are destroyed by erasing, deleting or overwriting.

SYSTEM MANAGER(S) AND ADDRESS:

The Judge Advocate General, Headquarters, United States Air Force, 1420 Air Force Pentagon, Washington, DC 20330–1420.

NOTIFICATION PROCEDURE:

Individuals seeking to determine whether this system of records contains information on themselves should address written inquiries to The Judge Advocate General, Headquarters United States Air Force, 1420 Air Force Pentagon, Washington, DC 20330–1420.

Requests should include name and Social Security Number (SSN).

RECORD ACCESS PROCEDURES:

Individuals seeking to access records about themselves contained in this system should address written requests to The Judge Advocate General, Headquarters United States Air Force, 1420 Air Force Pentagon, Washington, DC 20330–1420.

Requests should include name and Social Security Number (SSN).

CONTESTING RECORD PROCEDURES:

The Air Force rules for accessing records, and for contesting contents and appealing initial agency determinations are published in Air Force Instruction 37–132; 32 CFR part 806b; or may be obtained from the system manager.

RECORD SOURCE CATEGORIES:

From the individual.

EXEMPTIONS CLAIMED FOR THE SYSTEM:

None.

F051 AF JA D

SYSTEM NAME:

Litigation Records (Except Patents) (December 15, 2008, 73 FR 76010).

CHANGES:

Change System ID to ''F051 AFJA H.''

* * * * *

F051 AFJA H

SYSTEM NAME:

Litigation Records (Except Patents).

SYSTEM LOCATION:

The Judge Advocate General, Headquarters United States Air Force, 1420 Air Force Pentagon, Washington, DC 20330–1420. At Headquarters of Major Commands and all levels down to and including Air Force installations worldwide. Official mailing addresses are published as an appendix to the Air Force's compilation of systems of records notices.

CATEGORIES OF INDIVIDUALS COVERED BY THE SYSTEM:

All individuals who have brought suit against, or been involved in litigation with, the United States or its officers or employees concerning matters related to the Department of the Air Force; persons against whom litigation has been filed under 28 U.S.C. 1346b, 31 U.S.C. 3702, 42 U.S.C. 2651–3, and 46 U.S.C. App. 741–52; dependents, witnesses, and other persons providing information during the course of litigation.

CATEGORIES OF RECORDS IN THE SYSTEM:

All records required to defend the Department of the Air Force in litigation, to include: Litigants' names; Social Security Numbers (SSN); court pleadings; reports from Department of Defense offices, state and federal agencies; foreign governments; witness statements; surveys; contracts; photographs; legal opinions; personnel, finance, medical, and business records; audits; English translations of foreign documents; and environmental planning documents (including environmental impact statements).

AUTHORITY FOR MAINTENANCE OF THE SYSTEM:

10 U.S.C. 8013, Secretary of the Air Force, 10 U.S.C. 8037, Judge Advocate General, Air Force Instruction 51–301, Civil Litigation and E.O. 9397 (SSN).

PURPOSE(S):

Used by officers, employees and members of the Air Force to represent the United States in civil litigation; to enable the United States and its officers, employees and members who are counsel for, parties to, or otherwise involved in an official capacity in civil domestic or foreign litigation to obtain information from or consult with other governmental, corporate and private organizations, entities and individuals regarding litigation decisions to be made by The Judge Advocate General and the Department of Justice; to obtain information from or consult with other governmental, corporate and private organizations, entities and individuals in order to create structured settlement proposals; by the Air Force Audit Agency in conducting audits; by the Air Force Board for Correction of Military Records; and by the Defense Finance and Accounting Service and any Air Force financial management office and its officers and employees.

ROUTINE USES OF RECORDS MAINTAINED IN THE SYSTEM, INCLUDING CATEGORIES OF USERS AND THE PURPOSES OF SUCH USES:

In addition to those disclosures generally permitted under 5 U.S.C. 552a(b) of the Privacy Act, these records or information contained therein may specifically be disclosed outside the DoD as a routine use pursuant to 5 U.S.C. 552a(b)(3) as follows:

To the Court of Federal Claims on legislative referral of private relief bills;

To the Department of Veterans Affairs and its officers and employees to adjudicate claims.

The DoD 'Blanket Routine Uses' published at the beginning of the Air Force's compilation of systems of records notices apply to this system.

POLICIES AND PRACTICES FOR STORING, RETRIEVING, ACCESSING, RETAINING, AND DISPOSING OF RECORDS IN THE SYSTEM:

STORAGE:

Paper records in file folders and electronic storage media.

RETRIEVABILITY:

Retrieved by name of litigant, Social Security Number (SSN) and year of litigation.

SAFEGUARDS:

Records are accessed by authorized personnel as necessary to accomplish their official duties. Paper records are stored in locked rooms and cabinets. The computer storage devices are protected by computer system software.

RETENTION AND DISPOSAL:

Records located at AFLOA/JACL are retired permanently to the Washington National Records Center, Washington, DC 20409–0001. Other command levels dispose of records after two years upon completion of agency action. Files maintained in accordance with 42 U.S.C. 2651–3 are disposed of after two years. Medical malpractice litigation files are retired to the Armed Forces Institute of Pathology. Paper records are disposed of by tearing into pieces, shredding, macerating, pulping, or burning. Computer records are destroyed by deleting, erasing, degaussing, or by overwriting.

SYSTEM MANAGER(S) AND ADDRESS:

The Judge Advocate General, Headquarters United States Air Force, 1420 Air Force Pentagon, Washington, DC 20330–1420; or to the Staff Judge Advocate at the concerned subordinate command or installation.

NOTIFICATION PROCEDURE:

Individuals seeking to determine whether information about themselves is contained in this system should address written inquiries to The Judge Advocate General, Headquarters United States Air Force, 1420 Air Force Pentagon, Washington, DC 20330–1420; or to the Staff Judge Advocate at the concerned subordinate command or installation.

Written requests should be signed and include full name and proof of identity.

RECORD ACCESS PROCEDURES:

Individuals seeking access to information about themselves contained in this system should address written inquiries to The Judge Advocate General, Headquarters United States Air Force, 1420 Air Force Pentagon, Washington, DC 20330–1420; or to the Staff Judge Advocate at the concerned subordinate command or installation.

Written requests should be signed and include full name and proof of identity.

CONTESTING RECORD PROCEDURES:

The Air Force rules for accessing records, and for contesting contents and appealing initial agency determinations are published in Air Force Instruction 33–332; 32 CFR part 806b; or may be obtained from the system manager.

RECORD SOURCE CATEGORIES:

Court records, transcripts of depositions and other hearings, correspondence initiated by parties to litigation, information provided through witness interviews or other discovery

methods, reports prepared by or on behalf of the Air Force, reports of Federal, state, local or foreign government agencies and information obtained from witnesses and claimants.

EXEMPTIONS CLAIMED FOR THE SYSTEM:

None.

F051 AF JA F

SYSTEM NAME:

Courts-martial and Article 15 Records. (December 8, 2008, 73 FR 74472)

CHANGES:

Change System ID to ''F051 AFJA I.''

* * * * *

F051 AFJA I

SYSTEM NAME:

Courts-martial and Article 15 Records.

SYSTEM LOCATION:

Primary Location: The Judge Advocate General, Headquarters United States Air Force, 1420 Air Force Pentagon, Washington, DC 20330–1420.

Secondary Locations: Headquarters Air Force Personnel Center, 550 C Street W, Randolph Air Force Base, TX 78150–4746.

Washington National Records Center, 4205 Suitland Road, Suitland, MD 20746–8001.

Headquarters of Air Force major commands and all levels down to and including Air Force installations. Official mailing addresses are published as an appendix to the Air Force's compilation of systems of records notices.

CATEGORIES OF INDIVIDUALS COVERED BY THE SYSTEM:

Individuals subject to the Uniform Code of Military Justice (10 U.S.C. 802, Art. 2. Persons subject).

CATEGORIES OF RECORDS IN THE SYSTEM:

Individual's name, Social Security Number (SSN), records of trial by courts-martial; records of Article 15 punishment; discharge proceedings; documents received or prepared in anticipation of administrative non-judicial and judicial proceedings; witness statements; police reports; other reports and records from local, state or federal agencies.

AUTHORITY FOR MAINTENANCE OF THE SYSTEM:

10 U.S.C. 8013, Secretary of the Air Force; 10 U.S.C. 8037, Judge Advocate General; 10 U.S.C. 815, Art. 15 Commanding officer's nonjudicial punishment; 10 U.S.C. 854, Record of Trial; 10 U.S.C. 938, Art. 138. Complaints of wrongs; Air Force Instruction 51–201, Administration of Military Justice; Air Force Instruction 51–202, Law—Nonjudicial Punishment; and E.O. 9397 (SSN).

PURPOSE(S):

Records are used to investigate, adjudicate and prosecute adverse action cases, Article 138 complaints, and for other investigations, as necessary. For review by appellate and other authorities; for use for official purposes by Department of Defense personnel. Also used as source documents for collection of statistical information and used to manage cases and case processing.

ROUTINE USES OF RECORDS MAINTAINED IN THE SYSTEM, INCLUDING CATEGORIES OF USERS AND THE PURPOSES OF SUCH USES:

In addition to those disclosures generally permitted under 5 U.S.C. 552a(b) of the Privacy Act, these records, or information contained therein, may specifically be disclosed outside the DoD as a routine use pursuant to 5 U.S.C. 552a(b)(3) as follows:

Records from this system may be disclosed to other federal agencies and federal courts for official purposes, to include a determination of rights and entitlements of individuals concerned or the government.

The records may also be disclosed to a governmental board or agency or health care professional society or organization if such record or document is needed to perform licensing or professional standards monitoring; to medical institutions or organizations for official purposes, wherein the individual has applied for or been granted authority or employment to provide health care services if such record or document is needed to assess the professional qualifications of such member.

To victims and witnesses of a crime for the purposes of providing information consistent with the requirements of the Victim and Witness Assistance Program and the Victims' Rights and Restitution Act of 1990.

The DoD 'Blanket Routine Uses' set forth at the beginning of the Air Force's compilation of systems of records notices apply to this system.

POLICIES AND PRACTICES FOR STORING, RETRIEVING, ACCESSING, RETAINING, AND DISPOSING OF RECORDS IN THE SYSTEM:

STORAGE:

Paper records in file folders and electronic storage media.

RETRIEVABILITY:

Individual's name, Social Security Number (SSN) or Military Service Number.

SAFEGUARDS:

Records are accessed by person(s) responsible for servicing the record system in performance of their official duties and by authorized personnel who are properly screened and cleared for need-to-know. Records are stored in locked rooms and cabinets. Those in computer storage devices are protected by computer system software. Computers must be accessed with a password.

RETENTION AND DISPOSAL:

Courts-martial records are retained in office files for 2 years following date of final action and then retired as permanent.

General and special courts-martial records are retired to the Washington National Records Center, Washington, DC 20409–0002;

Summary courts-martial and Article 15 records are retained in office files for 3 years or until no longer needed, whichever is later, and then retired as permanent.

Summary courts-martial and Article 15 records are forwarded to the Air Force Personnel Center for filing in the individual's permanent master personnel record.

Records received or prepared in anticipation of judicial and non-judicial Uniform Code of Military Justice or discharge proceedings, and data maintained on Judge Advocate's computer storage are maintained until action is final or no longer needed.

Paper records are disposed of by tearing into pieces, shredding, pulping, macerating or burning. Computer records are destroyed by deleting, erasing, degaussing, or by overwriting.

SYSTEM MANAGER(S) AND ADDRESS:

The Judge Advocate General, Headquarters United States Air Force, 1420 Air Force Pentagon, Washington, DC 20330–1420.

NOTIFICATION PROCEDURE:

Individuals seeking to determine whether information about themselves is contained in this system of records should address written inquiries to The Judge Advocate General, Headquarters United States Air Force, 1420 Air Force Pentagon, Washington, DC 20330–1420.

Individuals should provide their full name, Social Security Number (SSN), Unit of assignment, date of trial and type of court, date of discharge action, and date of punishment imposed in the case of Article 15 action may also be necessary, as appropriate.

RECORD ACCESS PROCEDURES:

Individuals seeking to access records about themselves contained in this

system of records should address written inquiries to The Judge Advocate General, Headquarters United States Air Force, 1420 Air Force Pentagon, Washington, DC 20330–1420.

Individuals should provide their full name, Social Security Number (SSN), Unit of assignment, date of trial and type of court, date of discharge action, and date of punishment imposed in the case of Article 15 action may also be necessary, as appropriate.

CONTESTING RECORD PROCEDURES:

The Air Force rules for accessing records, and for contesting contents and appealing initial agency determinations are published in Air Force Instruction 33–332; 32 CFR part 806b; or may be obtained from the system manager.

RECORD SOURCE CATEGORIES:

Information from almost any source can be included if it is relevant and material to the proceedings. These include, but are not limited to witness statements; police reports; reports from local, state, and federal agencies; information submitted by an individual making an Article 138 complaint; Inspector General investigations and commander directed inquiries.

EXEMPTIONS CLAIMED FOR THE SYSTEM:

Portions of this system may be exempt pursuant to 5 U.S.C. 552a(j)(2) if the information is compiled and maintained by a component of the agency that performs as its principle function any activity pertaining to the enforcement of criminal laws from the following subsections of 5 U.S.C. 552a(c)(3), (c)(4), (d), (e)(1), (e)(2), (e)(3), (e)(4)(G), (H) and (I), (e)(5), (e)(8), (f), and (g).

Records compiled for law enforcement purposes, other than material within the scope of subsection 5 U.S.C. 552a(j)(2), may be exempt pursuant to 5 U.S.C. 552a(k)(2). However, if an individual is denied any right, privilege, or benefit for which he would otherwise be entitled by Federal law or for which he would otherwise be eligible, as a result of the maintenance of the information, the individual will be provided access to the information except to the extent that disclosure would reveal the identify of a confidential source from the following subsections of 5 U.S.C. 552a(c)(3), (d), (e)(1), (e)(4)(G), (H) and (I), and (f).

Note: When claimed, this exemption allows limited protection of investigative reports maintained in a system of records used in personnel or administrative actions.

An exemption rule for this record system has been promulgated in accordance with the requirements of 5 U.S.C. 553(b)(1), (2), and (3), (c) and (e) and published in 32 CFR part 806b. For additional information contact the system manager.

F051 AF JA H

SYSTEM NAME:

Claims Records. (November 12, 2008, 73 FR 66867).

CHANGES:

Change System ID to ''F051 AFJA J.''

* * * * *

F051 AFJA J

SYSTEM NAME:

Claims Records.

SYSTEM LOCATION:

The Judge Advocate General, Headquarters United States Air Force, 1420 Air Force Pentagon, Washington, DC 20330–1420. Headquarters of major commands and at all levels down to and including Air Force installations. Official mailing addresses are published as an appendix to the Air Force's compilation of systems of records notices.

CATEGORIES OF INDIVIDUALS COVERED BY THE SYSTEM:

Individuals filing administrative claims against the Air Force or against whom the Air Force has filed an administrative claim.

CATEGORIES OF RECORDS IN THE SYSTEM:

All records necessary to adjudicate a claim, to include reports from other DoD offices; federal and state agencies; foreign governments; and witness statements.

AUTHORITY FOR MAINTENANCE OF THE SYSTEM:

10 U.S.C. 8013, Secretary of the Air Force; U.S.C. 8037, Judge Advocate General, Deputy Judge Advocate General: Appointment and duties; Air Force Instruction 51–501, Tort Claims; Air Force Instruction 51–502, Personnel and Government Recovery Claims and E.O. 9397 (SSN).

PURPOSE(S):

Records are used for claims adjudication and processing, budgeting, and management of claims. Records are also used as necessary in civil litigation involving the United States.

ROUTINE USES OF RECORDS MAINTAINED IN THE SYSTEM, INCLUDING CATEGORIES OF USERS AND THE PURPOSES OF SUCH USES:

In addition to those disclosures generally permitted under 5 U.S.C. 552a(b) of the Privacy Act, these records or information contained therein may specifically be disclosed outside the DoD as a routine use pursuant to 5 U.S.C. 552a(b)(3) as follows:

To any other federal agency for the purpose of adjudicating claims and civil litigation.

To state and local entity for the purpose of claims processing and civil litigation involving the Air Force.

To any person or entity for the purpose of completing the Air Force's structured settlements.

To foreign governments and courts, carriers and their insurance companies for all purposes involving the investigation and payment of claims filed against the Air Force or in which the Air Force is an interested party.

The 'Blanket Routine Uses' published at the beginning of the Air Force's compilation of systems of records notices apply to this system.

POLICIES AND PRACTICES FOR STORING, RETRIEVING, ACCESSING, RETAINING, AND DISPOSING OF RECORDS IN THE SYSTEM:

STORAGE:

Paper records in file folders and on electronic storage media.

RETRIEVABILITY:

Retrieved by name, Social Security Number (SSN) and/or claim number.

SAFEGUARDS:

Records are accessed by person(s) responsible for servicing the record system in performance of their official duties and by authorized personnel who are properly screened and cleared for need-to-know. Records are stored in locked rooms and cabinets. Those in computer storage devices are protected by computer system software. Computers must be accessed with a password.

RETENTION AND DISPOSAL:

Retained in office either one or two years depending upon type of claim, then destroyed after four additional years at staging area; after agency action completed others are held one, three, five years or ten years, depending on the type of claim and type of record. Paper files are disposed of by tearing into pieces, shredding, pulping, macerating, or burning. Computer records are destroyed by deleting, erasing, degaussing, or by overwriting.

SYSTEM MANAGER(S) AND ADDRESS:

The Judge Advocate General, Headquarters United States Air Force, 1420 Air Force Pentagon, Washington, DC 20330–1420.

NOTIFICATION PROCEDURE:

Individuals seeking to determine whether information about themselves is contained in this system should address written inquiries to the Judge Advocate General, Headquarters United

States Air Force, 1420 Air Force Pentagon, Washington, DC 20330, or to the Staff Judge Advocate at the concerned subordinate command or installation.

Requests should include full name and proof of identity, date of incident and claim number, date and type of claim, location of incident may also be required.

RECORD ACCESS PROCEDURES:

Individuals seeking access to information about themselves contained in this system should address written inquiries to the Judge Advocate General, Headquarters United States Air Force, 1420 Air Force Pentagon, Washington, DC 20330; or to the Staff Judge Advocate at the concerned subordinate command or installation.

Requests should include full name and proof of identity, date of incident and claim number, date and type of claim, location of incident may also be required.

CONTESTING RECORD PROCEDURES:

The Air Force rules for accessing records, and for contesting contents and appealing initial agency determinations are published in Air Force Instruction 33–332; 32 CFR part 806b; or may be obtained from the system manager.

RECORD SOURCE CATEGORIES:

Information obtained from federal agency reports, claimants, medical institutions, police and investigating officers, the public media, bureaus of motor vehicles, state or local governments, and witnesses.

EXEMPTIONS CLAIMED FOR THE SYSTEM:

None.

F051 AF JA I

SYSTEM NAME:

Commander Directed Inquiries (December 12, 2008, 73 FR 75686)

CHANGES:

Change System ID to ''F051 AFJA K.''

* * * * *

F051 AFJA K

SYSTEM NAME:

Commander Directed Inquiries.

SYSTEM LOCATION:

Commander Directed Inquiries are maintained at the installation where the Commander's office is located.

Information copies of a report are kept at the individual's organization and at other organizations which have an interest in a particular incident or problem involving that individual that is addressed in the report. Official Air Force mailing addresses are published as an appendix to the Air Force's compilation of record systems notices.

CATEGORIES OF INDIVIDUALS COVERED BY THE SYSTEM:

All persons who are the subject of reviews, inquiries, or investigations conducted under the inherent authority of a commander or director. All persons who are the subject of administrative command actions for which another system of records is not applicable.

CATEGORIES OF RECORDS IN THE SYSTEM:

Commander directed investigations; letters/transcriptions of complaints, allegations and queries; letters of appointment; reports of reviews, inquiries and investigations with supporting attachments, exhibits and photographs, record of interviews; witness statements; reports of legal review of case files, congressional responses; memoranda; letters and reports of findings and actions taken; letters to complainants and subjects of investigations; letters of rebuttal from subjects of investigations; finance, personnel; administration; adverse information and technical reports; documentation of command action.

AUTHORITY FOR MAINTENANCE OF THE SYSTEM:

10 U.S.C. 8013, Secretary of the Air Force; 10 U.S.C. 8037, Judge Advocate General; 10 U.S.C. 164, Commanders of Combatant Commands; Air Force Instruction 51–904, Complaints of Wrongs under Article 138, Uniform Code of Military Justice and E.O. 9397 (SSN).

PURPOSE(S):

Used for thorough and timely resolution and response to complaints, allegations, or queries. May also be used for personnel actions involving civilian or military employees.

Documents received or prepared in anticipation of litigation are used by attorneys for the government to prepare for trials and hearings; to analyze evidence; to prepare for examination of witnesses; to prepare for argument before courts, magistrates, and investigating officers; and to advise commanders.

ROUTINE USES OF RECORDS MAINTAINED IN THE SYSTEM, INCLUDING CATEGORIES OF USERS AND THE PURPOSE OF SUCH USES:

In addition to those disclosures generally permitted under 5 U.S.C. 552a(b) of the Privacy Act, these records, or information contained therein, may specifically be disclosed outside the DoD as a routine use pursuant to 5 U.S.C. 552a(b)(3) as follows:

To governmental boards or agencies or health care professional societies or organizations, or other professional organizations, if such record or document is needed to perform licensing or professional standards monitoring.

The DoD 'Blanket Routine Uses' set forth at the beginning of the Air Force's compilation of systems of records notices apply to this system.

POLICIES AND PRACTICES FOR STORING, RETRIEVING, ACCESSING, RETAINING, AND DISPOSING OF RECORDS IN THE SYSTEM:

STORAGE:

Paper records in file folders and electronic storage media.

RETRIEVABILITY:

Retrieved by subject's name and/or Social Security Number (SSN).

SAFEGUARDS:

Records are accessed by person(s) responsible for servicing the record system in performance of their official duties and by authorized personnel who are properly screened and cleared for need-to-know. Records are stored in locked rooms and cabinets. Those in computer storage devices are protected by computer system software. Computers are only accessible with a password.

RETENTION AND DISPOSAL:

Disposed of 2 years after the case is closed. Paper records are disposed of by tearing into pieces, shredding, pulping, macerating or burning. Computer records are destroyed by deleting, erasing, degaussing or by overwriting.

SYSTEM MANAGER(S) AND ADDRESS:

The Commander who initiated an investigation or that Commander's successor in command, at that Commander's installation office. Official Air Force mailing addresses are published as an appendix to the Air Force's compilation of record systems notices.

NOTIFICATION PROCEDURE:

Individuals seeking to determine whether this system of records contains information about themselves should address written inquiries to the Commander who initiated the investigation, or that Commander's successor, at the Commander's installation office.

Requests should provide their full name, mailing address, and proof of identity.

RECORD ACCESS PROCEDURES:

Individuals seeking to access records about themselves contained in this

system should address requests to the Commander who initiated the investigation, or that Commander's successor in command, at the Commander's installation office.

Requests should provide their full name, mailing address and proof of identity.

CONTESTING RECORD PROCEDURES:

The Air Force rules for accessing records, and for contesting contents and appealing initial agency determinations, are published in Air Force Instruction 33–332; 32 CFR part 806b; or may be obtained from the system manager.

RECORD SOURCE CATEGORIES:

Complainants, subjects, reports of investigations, witnesses, third parties, state and local governments and agencies, other federal agencies, members of Congress, and civilian police reports. Information from almost any source can be included if it is relevant and material to the investigation, inquiry, or subsequent command action.

EXEMPTIONS CLAIMED FOR THE SYSTEM:

Investigatory material compiled for law enforcement purposes, other than material within the scope of subsection 5 U.S.C. 552a(j)(2), may be exempt pursuant to 5 U.S.C. 552a(k)(2). However, if an individual is denied any right, privilege, or benefit for which he would otherwise be entitled by Federal law or for which he would otherwise be eligible, as a result of the maintenance of the information, the individual will be provided access to the information exempt to the extent that disclosure would reveal the identify of a confidential source.

Note: When claimed, this exemption allows limited protection of investigative reports maintained in a system of records used in personnel or administrative actions.

An exemption rule for this system has been promulgated in accordance with requirements of 5 U.S.C. 553(b)(1), (2), and (3), (c) and (e) published in 32 CFR part 806b. For additional information contact the system manager.

[FR Doc. E8–31044 Filed 12–30–08; 8:45 am]
BILLING CODE 5001–06–P

DEPARTMENT OF DEFENSE

Department of the Navy

[Docket ID: USN–2008–0067]

Privacy Act of 1974; System of Records

AGENCY: U.S. Marine Corps, DoD.

ACTION: Notice To Amend Two Systems of Records.

SUMMARY: The U.S. Marine Corps is proposing to amend two systems of records notices in its existing inventory of record systems subject to the Privacy Act of 1974, (5 U.S.C. 552a), as amended.

DATES: This proposed action will be effective without further notice on January 30, 2009, unless comments are received which result in a contrary determination.

ADDRESSES: Send comments to Headquarters, U.S. Marine Corps, FOIA/PA Section (ARSF), 2 Navy Annex, Room 3134, Washington, DC 20380–1775.

FOR FURTHER INFORMATION CONTACT: Ms. Tracy Ross at (703) 614–4008.

SUPPLEMENTARY INFORMATION: The U.S. Marine Corps systems of records notices subject to the Privacy Act of 1974, (5 U.S.C. 552a), as amended, have been published in the **Federal Register** and are available from the address above.

The specific changes to the record systems being amended are set forth below followed by the notice, as amended, published in its entirety. The proposed amendments are not within the purview of subsection (r) of the Privacy Act of 1974, (5 U.S.C. 552a), as amended, which requires the submission of a new or altered system report.

Dated: December 23, 2008.

Morgan E. Frazier,

Alternate OSD Federal Register Liaison Officer, Department of Defense.

M–01080–2

SYSTEM NAME:

U.S. Marine Corps Manpower Personnel Analysis Record (December 22, 2008, 73 FR 73258).

CHANGES:

Change System ID to ''M01080–2.''

* * * * *

M01080–2

SYSTEM NAME:

U.S. Marine Corps Manpower Personnel Analysis Records.

SYSTEM LOCATION:

Manpower and Reserve Affairs (M&RA), Manpower Information Systems Division (MI), 3280 Russell Rd., Quantico, VA 22134–5103.

CATEGORIES OF INDIVIDUALS COVERED BY THE SYSTEM:

All active duty and reserve Marines.

CATEGORIES OF RECORDS IN THE SYSTEM:

The system contains personnel data which includes, but is not limited to name, rank/grade, Social Security Number (SSN), current address/contact information, duty status, component code, gender, security investigation date/type, education, enlistment contract details, end of active service (EAS), end of current contract (ECC), end of obligated service (EOS), training information to include military occupational specialties (MOS), and related data.

AUTHORITY FOR MAINTENANCE OF THE SYSTEM:

10 U.S.C. 5013, Department of the Navy; 10 U.S.C. 5042, Headquarters, Marine Corps: general duties; 5 U.S.C. 301, Departmental Regulations; and E.O. 9397 (SSN).

PURPOSE(S):

To redesign and develop appropriate information management, provide simulation, analysis, and forecasting tools to capture and process manpower information, making data visible to the appropriate Marine Corps decision makers. Through a single entry point in the system, manpower analysis managers will be able to control publication of applicable data across the entire enterprise through their respective chain of command.

ROUTINE USES OF RECORDS MAINTAINED IN THE SYSTEM, INCLUDING CATEGORIES OF USERS AND THE PURPOSES OF SUCH USES:

In addition to those disclosures generally permitted under 5 U.S.C. 552a(b) of the Privacy Act, these records or information contained therein may specifically be disclosed outside the DoD as a routine use pursuant to 5 U.S.C. 552a(b)(3) as follows:

To officials and employees of other departments and agencies of the Executive Branch of government, upon request, in the performance of their official duties related to the oversight of Navy/Marine Corps management.

The DoD 'Blanket Routine Uses' set forth at the beginning of the Marine Corps' compilation of systems of records notices also apply to this system.

POLICIES AND PRACTICES FOR STORING, RETRIEVING, ACCESSING, RETAINING, AND DISPOSING OF RECORDS IN THE SYSTEM:

STORAGE:

Electronic Storage Media.

RETRIEVABILITY:

By individual's name and Social Security Number (SSN).

SAFEGUARDS:

Records are maintained in a secure, limited access, or monitored work area.

Physical entry by unauthorized persons is restricted by the use of locks, guards, or administrative procedures. Access to personal information is restricted to those who require the records in the performance of their official duties. Access to computer records is further restricted by the use of passwords which are changed periodically.

RETENTION AND DISPOSAL:

The records retention has not been approved by National Archives and Records Administration, until then treat as permanent.

SYSTEM MANAGER(S) AND ADDRESS:

Director, Manpower Information (MI), 3280 Russell Rd., Quantico, VA 22134–5103.

NOTIFICATION PROCEDURE:

Individuals seeking to determine whether information about themselves is contained in this system should address written inquiries to Director, Manpower Information (MI), 3280 Russell Rd., Quantico, VA 22134–5103.

The request must be signed and include full name and Social Security Number (SSN), as well as your complete mailing address.

RECORD ACCESS PROCEDURES:

Individuals seeking access to information about themselves contained in this system should address written inquiries to: Director Manpower Information (MI), 3280 Russell Rd., Quantico, VA 22134–5103.

The request must be signed and include full name and Social Security Number (SSN), as well as your complete mailing address.

CONTESTING RECORD PROCEDURES:

The USMC rules for contesting contents and appealing initial agency determinations are published in Secretary of the Navy Instruction 5211.5; Marine Corps Order P5211.2; 32 CFR part 701; or may be obtained from Director, Manpower Information (MI), 3280 Russell Rd., Quantico, VA 22134–5103.

RECORD SOURCE CATEGORIES:

Operational Data Store Enterprise (ODSE); Total Force Data Warehouse (TFDW); Marine Corps Recruiting Information Support System (MCRISS); Marine Corps Training Information Management System (MCTIMS); Manpower Assignment Support System (MASS) and Total Force Structure Management System (TFSMS).

EXEMPTIONS CLAIMED FOR THE SYSTEM:

None.

M–01080–1

SYSTEM NAME:

Total Force Administration System Secure Personnel Accountability (TFAS SPA) Records (November 12, 2008, 73 FR 66882).

CHANGES:

Change System ID to ''M01080–1.''

* * * * *

M01080–1

SYSTEM NAME:

Total Force Administration System Secure Personnel Accountability (TFAS SPA) Records.

SYSTEM LOCATION:

Web servers will be located at Information Systems Management Branch (ARI), Headquarters Marine Corps, #2 Navy Annex, Washington, DC 20380–1775. The Cross Domain Solution (CDS) server will be located at the Defense Information Support Agency (DISA), 701 South Courthouse Road, Arlington, VA 22204–2199.

CATEGORIES OF INDIVIDUALS COVERED BY THE SYSTEM:

Deployed active duty Marines, as well as DoD members who are under the status of United States Code, Title 10, Armed Forces Operational Control (OPCON), and Administrative Control (ADCON) to Marine Force Commands to include Army National Guard, and reserve military service members of the Air Force, Navy, Army, and approved foreign military personnel.

CATEGORIES OF RECORDS IN THE SYSTEM:

Deployed service data such as: Current location (Country, Area of Operation, Military Grid, Lat/Long, etc.), Title 10 OPCON, Title 10 ADCON, assigned, attached, tenant command relationships; full name, rank, Social Security Number (SSN), date of birth, sex, death date, marital status, citizenship, country code, personnel category code, personnel entitlement condition type code, service, primary occupation code, and pay plan code. The system contains specific unit information (commander name and unit location), for the personnel it tracks.

AUTHORITY FOR MAINTENANCE OF THE SYSTEM:

10 U.S.C. 5013, Secretary of the Navy; 10 U.S.C. 5041, Headquarters, Marine Corps; CJCSM 3150.13B Joint Reporting Structure—Personnel Manual; Title 10 U.S.C. 136, Uniform Code of Military Justice and E.O. 9397 (SSN).

PURPOSE(S):

The TFAS SPA Module provides a tool to implement deployed accountability for all active duty U.S. Marines, as well as DoD members who are Title 10 OPCON to Marine Force Commands to include Army National Guard, and reserve military service members of the Air Force, Navy, Army, and approved foreign military personnel.

ROUTINE USES OF RECORDS MAINTAINED IN THE SYSTEM, INCLUDING CATEGORIES OF USERS AND THE PURPOSES OF SUCH USES:

In addition to those disclosures generally permitted under 5 U.S.C. 552a(b) of the Privacy Act, these records or information contained therein may specifically be disclosed outside the DoD as a routine use pursuant to 5 U.S.C. 552a(b)(3) as follows:

To officials and employees of other departments and agencies of the Executive Branch of government, upon request, in the performance of their official duties related to the management of deployed Marine individuals at locations worldwide, as well as officials and investigating bodies for health surveillance purposes.

The 'Blanket Routine Uses' that appear at the beginning of the Marine Corps' compilation of systems of records notices also apply to this system. The Blanket Routine Uses' appear at *http://www.privacy.navy.mil/.*

Marine Forces delegated Title 10 operational control (OPCON) authority from a U.S. Armed Forces Combatant command. The Office of Secretary of Defense (OSD) has mandated that Marine operational forces are responsible to report the location of all Service Members' classified location under Marine Forces' command worldwide.

POLICIES AND PRACTICES FOR STORING, RETRIEVING, ACCESSING, RETAINING, AND DISPOSING OF RECORDS IN THE SYSTEM:

STORAGE:

Electronic storage media.

RETRIEVEABILITY:

Name and/or Social Security Number and/or Unit.

SAFEGUARDS:

Records are maintained in area only accessible to authorized ARI personnel that are properly screened, cleared, and trained. System software uses a user name and password challenge to lock out unauthorized access. System software contains authorization permission lists and role partitioning to limit access to appropriate organizational level.

RETENTION AND DISPOSAL:

The records retention has not been approved by The National Archives and

Records Administration, until then treat as permanent.

SYSTEM MANAGER AND ADDRESS:

Policy Official and Records Holder is Director, Manpower Information (MI), 3280 Russell Rd., Quantico, VA 22134–5103.

NOTIFICATION PROCEDURES:

Individuals seeking to determine whether information about themselves is contained in this system should address written inquiries to Director, Manpower Information (MI), 3280 Russell Rd., Quantico, VA 22134–5103.

Your request must be signed and include your full name and SSN, as well as your complete mailing address.

RECORD ACCESS PROCEDURES:

Individuals seeking access to information about themselves contained in this system should address written inquiries to Director, Manpower Information (MI), 3280 Russell Rd., Quantico, VA 22134–5103.

Your request must be signed and include your full name and SSN, as well as your complete mailing address.

CONTESTING RECORD PROCEDURES:

The USMC rules for contesting contents and appealing initial agency determinations are published in Secretary of the Navy Instruction 5211.5; Marine Corps Order P5211.2; 32 CFR part 701; or may be obtained from the system manager, Director, Manpower Information (MI), 3280 Russell Rd., Quantico, VA 22134–5103.

RECORD SOURCE CATEGORIES:

Name, SSN, and associated personnel data is pulled from the Operational Data Store Enterprise (ODSE) and Defense Manpower Data Center (DMDC).

EXEMPTIONS CLAIMED FOR THE SYSTEM:

Information specifically authorized to be classified under E.O. 12958, as implemented by DoD 5200.1–R, may be exempt pursuant to 5 U.S.C. 552(k)(1).

An exemption rule for this system has been promulgated in accordance with requirements of 5 U.S.C. 553(b)(1), (2), and (3), (c) and (e) published in 32 CFR part 806b. For additional information contact the system manager.

[FR Doc. E8–31055 Filed 12–30–08; 8:45 am]

BILLING CODE 5001–06–P

DEPARTMENT OF DEFENSE

Department of the Navy

[Docket ID: USN–2008–0066]

Privacy Act of 1974; System of Records

AGENCY: U.S. Marine Corps, DoD.

ACTION: Notice to amend a system of records.

SUMMARY: The U.S. Marine Corps is proposing to amend a system of records notice in its existing inventory of record systems subject to the Privacy Act of 1974, (5 U.S.C. 552a), as amended.

DATES: This proposed action will be effective without further notice on January 30, 2009 unless comments are received which result in a contrary determination.

ADDRESSES: Send comments to Headquarters, U.S. Marine Corps, FOIA/PA Section (ARSF), 2 Navy Annex, Room 3134, Washington, DC 20380–1775.

FOR FURTHER INFORMATION CONTACT: Ms. Tracy Ross at (703) 614–4008.

SUPPLEMENTARY INFORMATION: The U.S. Marine Corps systems of records notices subject to the Privacy Act of 1974, (5 U.S.C. 552a), as amended, have been published in the **Federal Register** and are available from the address above.

The specific changes to the record system being amended are set forth below followed by the notice, as amended, published in its entirety. The proposed amendments are not within the purview of subsection (r) of the Privacy Act of 1974, (5 U.S.C. 552a), as amended, which requires the submission of a new or altered system report.

Dated: December 23, 2008.

Morgan E. Frazier,

Alternate OSD Federal Register Liaison Officer, Department of Defense.

M06320–X

SYSTEM NAME:

Marine Corps Total Information Management Records. (December 8, 2008, 73 FR 74474).

CHANGES:

Change System ID to ''M06320–1.''

* * * * *

M06320–1

SYSTEM NAME:

Marine Corps Total Information Management Records.

SYSTEM LOCATION:

United States Marine Corps Systems Command, Office of the Command Information Officer, 2200 Lester Street, Quantico, VA 22143–6050.

CATEGORIES OF INDIVIDUALS COVERED BY THE SYSTEM:

Marine Corps Systems Command active duty, reservists, civilians, and contractors personnel.

CATEGORIES OF RECORDS IN THE SYSTEM:

The system contains personnel data which includes, but is not limited to individual's name, rank/grade, Social Security Number (SSN), current address, contact information, duty status, component code, sex, security investigation date/type, education, training information to include military occupational specialties and related data.

AUTHORITY FOR MAINTENANCE OF THE SYSTEM:

10 U.S.C. 5013, Secretary of the Navy; 10 U.S.C. 5041, United States Marine Corps; 5 U.S.C. 301, Departmental Regulations; E.O. 10450, Security Requirements for Government Employment and E.O. 9397 (SSN).

PURPOSE(S):

The Total Information Gateway-Enterprise Resources System is a system of records that serves as a controlled repository for information needed by personnel necessary for performance of duties and other DoD-related functions. It supports the following strategically essential business processes: Facilities Management, Knowledge Management, Task Management, Document Management, Personnel Management and additional Business support functions such as Security services. It is an ongoing, growing, flexible system that encompasses a number of strategic applications including: Online all hands messages, knowledge centers, calendars, the command tasker system and other workflow applications. As a management tool, statistical data, with all personal identifiers removed, may be used for system efficiency, workload calculation, or reporting purposes.

ROUTINE USES OF RECORDS MAINTAINED IN THE SYSTEM, INCLUDING CATEGORIES OF USERS AND THE PURPOSES OF SUCH USES:

In addition to those disclosures generally permitted under 5 U.S.C. 552a(b) of the Privacy Act, these records or information contained therein may specifically be disclosed outside the DoD as a routine use pursuant to 5 U.S.C. 552a(b)(3) as follows:

The DoD 'Blanket Routine Uses' set forth at the beginning of the Marine Corps' compilation of systems of records notices apply to this system.

POLICIES AND PRACTICES FOR STORING, RETRIEVING, ACCESSING, RETAINING, AND DISPOSING OF RECORDS IN THE SYSTEM:

STORAGE:

Electronic storage media.

RETRIEVABILITY:

Individual's name and/or Social Security Number (SSN).

SAFEGUARDS:

Access is restricted only by authorized persons who are properly screened. This system is password and/or System software uses Primary Key Infrastructure (PKI)/Common Access Card (CAC) protected. Based on user profiles, there are different levels of access. Full access to information maintained in the database is available only to authorized Agency personnel with established official need-to-know. Records are maintained in secure, limited access, or monitored work areas accessible only to authorized personnel.

RETENTION AND DISPOSAL:

Records are retained for three years and then destroyed.

SYSTEM MANAGER(S) AND ADDRESS:

Marine Corps Systems Command, Office of the Command Information Officer, 2200 Lester Street, Quantico, VA 22134–6050.

NOTIFICATION PROCEDURE:

Individuals seeking to determine whether information about themselves is contained in this system should address written inquiries to U.S Marine Corps System Command, Office of the Command Information Officer, Information Systems Management Team, 2200 Lester Street, Quantico, VA 22134–6050.

Requests should contain individual's name, Social Security Number (SSN), current mailing address, and must be signed.

RECORD ACCESS PROCEDURES:

Individuals seeking access to information about themselves contained in this system should address written inquiries to U.S Marine Corps System Command, Office of the Command Information Officer, Information Systems Management Team, 2200 Lester Street, Quantico, VA 22134–6050.

Requests should contain individual's name, Social Security Number (SSN), current mailing address and must be signed.

CONTESTING RECORD PROCEDURES:

The USMC rules for contesting contents and appealing initial agency determinations are published in Secretary of the Navy Instruction 5211.5E; 32 CFR part 701; or may be obtained from the system manager.

RECORD SOURCE CATEGORIES:

Individuals.

EXEMPTIONS CLAIMED FOR THE SYSTEM:

None.

[FR Doc. E8–31072 Filed 12–30–08; 8:45 am]

BILLING CODE 5001–06–P

DEPARTMENT OF EDUCATION

Submission for OMB Review; Comment Request

AGENCY: Department of Education.

SUMMARY: The Director, Information Collection Clearance Division, Regulatory Information Management Services, Office of Management invites comments on the submission for OMB review as required by the Paperwork Reduction Act of 1995.

DATES: Interested persons are invited to submit comments on or before January 30, 2009.

ADDRESSES: Written comments should be addressed to the Office of Information and Regulatory Affairs, Attention: Education Desk Officer, Office of Management and Budget, 725 17th Street, NW., Room 10222, New Executive Office Building, Washington, DC 20503 or faxed to (202) 395–6974.

SUPPLEMENTARY INFORMATION: Section 3506 of the Paperwork Reduction Act of 1995 (44 U.S.C. Chapter 35) requires that the Office of Management and Budget (OMB) provide interested Federal agencies and the public an early opportunity to comment on information collection requests. OMB may amend or waive the requirement for public consultation to the extent that public participation in the approval process would defeat the purpose of the information collection, violate State or Federal law, or substantially interfere with any agency's ability to perform its statutory obligations. The IC Clearance Official, Regulatory Information Management Services, Office of Management, publishes that notice containing proposed information collection requests prior to submission of these requests to OMB. Each proposed information collection, grouped by office, contains the following: (1) Type of review requested, *e.g.,* new, revision, extension, existing or reinstatement; (2) Title; (3) Summary of the collection; (4) Description of the need for, and proposed use of, the information; (5) Respondents and frequency of collection; and (6) Reporting and/or Recordkeeping burden. OMB invites public comment.

Dated: December 24, 2008.

Stephanie Valentine,

Acting IC Clearance Official, Regulatory Information Management Services, Office of Management.

Office of Elementary and Secondary Education

Type of Review: New Collection.

Title: Reading First Expenditure Study.

Frequency: Annually.

Affected Public: Not-for-profit institutions; State, Local, or Tribal Gov't, SEAs or LEAs.

Reporting and Recordkeeping Hour Burden:

Responses: 4,420.

Burden Hours: 13,260.

Abstract: The U.S. Department of Education Reading First program has no formal mechanism for grantees to report on specific uses of grant funds. The proposed surveys will collect data on the use and allocation of Reading First grants from current SEA grantees and their LEA subgrantees. Collecting such information will help satisfy the informational needs of key stakeholders, and inform future grant-making efforts.

Requests for copies of the information collection submission for OMB review may be accessed from *http://edicsweb.ed.gov,* by selecting the ''Browse Pending Collections'' link and by clicking on link number 3844. When you access the information collection, click on ''Download Attachments'' to view. Written requests for information should be addressed to U.S. Department of Education, 400 Maryland Avenue, SW., LBJ, Washington, DC 20202–4537. Requests may also be electronically mailed to the Internet address *ICDocketMgr@ed.gov* or faxed to 202–401–0920. Please specify the complete title of the information collection when making your request.

Comments regarding burden and/or the collection activity requirements should be electronically mailed to *ICDocketMgr@ed.gov.* Individuals who use a telecommunications device for the deaf (TDD) may call the Federal Information Relay Service (FIRS) at 1–800–877–8339.

[FR Doc. E8–31164 Filed 12–30–08; 8:45 am]

BILLING CODE 4000–01–P

DEPARTMENT OF EDUCATION

Notice of Proposed Information Collection Requests

AGENCY: Department of Education.

SUMMARY: The Leader, Information Collection Clearance Division, Regulatory Information Management Services, Office of Management, invites comments on the proposed information collection requests as required by the Paperwork Reduction Act of 1995.

DATES: Interested persons are invited to submit comments on or before March 2, 2009.

SUPPLEMENTARY INFORMATION: Section 3506 of the Paperwork Reduction Act of 1995 (44 U.S.C. Chapter 35) requires that the Office of Management and Budget (OMB) provide interested Federal agencies and the public an early opportunity to comment on information collection requests. OMB may amend or waive the requirement for public consultation to the extent that public participation in the approval process would defeat the purpose of the information collection, violate State or Federal law, or substantially interfere with any agency's ability to perform its statutory obligations. The Leader, Regulatory Information Management Services, Office of Management, publishes that notice containing proposed information collection requests prior to submission of these requests to OMB. Each proposed information collection, grouped by office, contains the following: (1) Type of review requested, *e.g.,* new, revision, extension, existing or reinstatement; (2) Title; (3) Summary of the collection; (4) Description of the need for, and proposed use of, the information; (5) Respondents and frequency of collection; and (6) Reporting and/or Recordkeeping burden. OMB invites public comment.

The Department of Education is especially interested in public comment addressing the following issues: (1) Is this collection necessary to the proper functions of the Department; (2) will this information be processed and used in a timely manner; (3) is the estimate of burden accurate; (4) how might the Department enhance the quality, utility, and clarity of the information to be collected; and (5) how might the Department minimize the burden of this collection on the respondents, including through the use of information technology.

Dated: December 23, 2008.

Stephanie Valentine,

Acting Leader, Information Collections Clearance Division, Regulatory Information Management Services, Office of Management.

Office of Elementary and Secondary Education

Type of Review: Extension.

Title: Local Flexibility Demonstration Program (Local-Flex) Application Package.

Frequency: Annually.

Affected Public: Businesses or other for-profit; State, Local, or Tribal Gov't, SEAs or LEAs.

Reporting and Recordkeeping Hour Burden:

Responses: 50.

Burden Hours: 4,000.

Abstract: The Local Flexibility Demonstration (Local-Flex) program provides participating local educational agencies (LEAs) with unprecedented flexibility to consolidate certain Federal education funds and to use those funds for any educational purpose under the Elementary and Secondary Education Act (ESEA) in order to meet the State's definition of adequate yearly progress and attain specific measurable goals for improving student achievement and narrowing achievement gaps. The application package contains information applicants will need to prepare and submit their Local-Flex proposals.

Requests for copies of the proposed information collection request may be accessed from *http://edicsweb.ed.gov,* by selecting the ''Browse Pending Collections'' link and by clicking on link number 3923. When you access the information collection, click on ''Download Attachments'' to view. Written requests for information should be addressed to U.S. Department of Education, 400 Maryland Avenue, SW., LBJ, Washington, DC 20202–4537. Requests may also be electronically mailed to *ICDocketMgr@ed.gov* or faxed to 202–401–0920. Please specify the complete title of the information collection when making your request.

Comments regarding burden and/or the collection activity requirements should be electronically mailed to *ICDocketMgr@ed.gov.* Individuals who use a telecommunications device for the deaf (TDD) may call the Federal Information Relay Service (FIRS) at 1–800–877–8339.

[FR Doc. E8–31177 Filed 12–30–08; 8:45 am]

BILLING CODE 4000–01–P

DEPARTMENT OF ENERGY

Federal Energy Regulatory Commission

[Project No. 6885–009]

Richard Moss; Notice of Application Ready for Environmental Analysis and Soliciting Comments, Recommendations, Terms and Conditions, and Prescriptions

December 23, 2008.

Take notice that the following hydroelectric application has been filed with the Commission and is available for public inspection.

a. *Type of Application:* A Subsequent License. (Minor Project).

b. *Project No.:* 6885–009.

c. *Date filed:* December 31, 2007.

d. *Applicant:* Richard Moss.

e. *Name of Project:* Cinnamon Ranch Hydroelectric Project.

f. *Location:* On Middle Creek and Birch Creek, in the Hammil Valley area of Mono County, near the Town of Benton, California. The project occupies 0.13 acre of Forest Service lands within Inyo National Forest and 7.4 acres of lands administered by the Bureau of Land Management.

g. *Filed Pursuant to:* Federal Power Act 16 U.S.C. 791 (a)–825(r).

h. *Applicant Contact:* Don Moss, 8381 Foppiano Way, Sacramento, CA 95829, (916) 715–6023.

i. *FERC Contact:* Gaylord Hoisington, (202) 502–6032 or *gaylord.hoisington@FERC.gov.*

j. Deadline for filing comments, recommendations, terms and conditions, and prescriptions is 60 days from the issuance of this notice; reply comments are due 105 days from the issuance date of this notice.

All documents (original and eight copies) should be filed with: Kimberly D. Bose, Secretary, Federal Energy Regulatory Commission, 888 First Street, NE., Washington, DC 20426.

The Commission's Rules of Practice require all intervenors filing documents with the Commission to serve a copy of that document on each person on the official service list for the project. Further, if an intervenor files comments or documents with the Commission relating to the merits of an issue that may affect the responsibilities of a particular resource agency, they must also serve a copy of the document on that resource agency.

Comments, recommendations, terms and conditions, and prescriptions may be filed electronically via the Internet in lieu of paper. The Commission strongly encourages electronic filings. See 18 CFR 385.2001(a)(1)(iii) and the

instructions on the Commission's Web site (*http://www.ferc.gov*) under the ''e-Filing'' link.

k. This application has been accepted, and is ready for environmental analysis at this time.

l. The existing operating project was built in 1960 and has been furnishing electric power to the Cinnamon ranch since that time. The project consists of: (1) Two existing diversion flumes; (2) a 5,940-foot-long penstock; (3) a powerhouse containing a turbine and generator for a total installed capacity of 150 kilowatts; (4) a 5,176-foot-long, 12 kilvolt transmission line and (5) appurtenant facilities. The applicant proposes no changes to the project facilities or operations. The project is estimated to generate an average of 421,184 kilowatt-hours annually.

The existing project operates run-of-river, with no peaking capabilities. Two small diversions, one on Birch Creek and one on Middle Creek provide water through open ditches to a 3.57-acre-foot de-silting pond. In the de-silting pond, a screened stand pipe functions as the intake for the 12-inch-diameter, 5,940-foot-long steel penstock. Water from the turbine tailrace is delivered directly into the Cinnamon Ranch irrigation system.

m. A copy of the application is available for review at the Commission in the Public Reference Room or may be viewed on the Commission's Web site at *http://www.ferc.gov* using the ''eLibrary'' link. Enter the docket number excluding the last three digits in the docket number field to access the document. For assistance, contact FERC Online Support at *FERCOnlineSupport@ferc.gov* or toll-free at 1–866–208–3676, or for TTY, (202) 502–8659. A copy is also available for inspection and reproduction at the address in item h above.

All filings must (1) bear in all capital letters the title ''COMMENTS'', ''REPLY COMMENTS'', ''RECOMMENDATIONS,'' ''TERMS AND CONDITIONS,'' or ''PRESCRIPTIONS;'' (2) set forth in the heading the name of the applicant and the project number of the application to which the filing responds; (3) furnish the name, address, and telephone number of the person submitting the filing; and (4) otherwise comply with the requirements of 18 CFR 385.2001 through 385.2005. All comments, recommendations, terms and conditions or prescriptions must set forth their evidentiary basis and otherwise comply with the requirements of 18 CFR 4.34(b). Agencies may obtain copies of the application directly from the applicant. Each filing must be accompanied by proof of service on all persons listed on the service list prepared by the Commission in this proceeding, in accordance with 18 CFR 4.34(b), and 385.2010.

You may also register online at *http://www.ferc.gov/docs-filing/esubscription.asp* to be notified via e-mail of new filings and issuances related to this or other pending projects. For assistance, contact FERC Online Support.

Kimberly D. Bose,

Secretary.

[FR Doc. E8–31108 Filed 12–30–08; 8:45 am]

BILLING CODE 6717–01–P

DEPARTMENT OF ENERGY

Federal Energy Regulatory Commission

Combined Notice of Filings # 1

November 18, 2008.

Take notice that the Commission received the following electric corporate filings:

Docket Numbers: EC09–20–000.
Applicants: E.ON AG.
Description: Dewey & LeBoeuf LLP reports to accept for filing the application under Section 203 of the Federal Power Act for modification of the foreign utility company acquisitions verification procedure under rule 33.1(c)(5) etc.
Filed Date: 11/12/2008.
Accession Number: 20081114–0233.
Comment Date: 5 p.m. Eastern Time on Wednesday, December 3, 2008.

Docket Numbers: EC09–21–000.
Applicants: BE Red Oak LLC, JP Morgan Ventures Energy Corporation, Sempra Energy Trading LLC.
Description: Joint Application for Authorization under Section 203 of the FPA, Request for Waiver of Certain Commission Requirements, and Requests for Confidential and Expedited Treatment.
Filed Date: 11/14/2008.
Accession Number: 20081114–5122.
Comment Date: 5 p.m. Eastern Time on Friday, December 5, 2008.

Docket Numbers: EC09–23–000.
Applicants: Shiloh Wind Project 2, LLC.
Description: Application of Shiloh Wind Project 2, LLC for Authorization Under Section 203 of the Federal Power Act, Request for Expedited Consideration and Confidential Treatment.
Filed Date: 11/17/2008.
Accession Number: 20081117–5041.
Comment Date: 5 p.m. Eastern Time on Monday, December 8, 2008.

Take notice that the Commission received the following exempt wholesale generator filings:

Docket Numbers: EG09–15–000.
Applicants: Buffalo Ridge I LLC.
Description: Notice of Self-Certification of Exempt Wholesale Generator Status re Buffalo Ridge I LLC.
Filed Date: 11/18/2008.
Accession Number: 20081118–5049.
Comment Date: 5 p.m. Eastern Time on Tuesday, December 9, 2008.

Docket Numbers: EG09–16–000.
Applicants: Moraine Wind II LLC.
Description: Notice of Self-Certification of Exempt Wholesale Generator Status.
Filed Date: 11/18/2008.
Accession Number: 20081118–5050.
Comment Date: 5 p.m. Eastern Time on Tuesday, December 9, 2008.

Docket Numbers: EG09–17–000.
Applicants: Pebble Springs Wind LLC.
Description: Notice of Self-Certification of Exempt Wholesale Generator Status.
Filed Date: 11/18/2008.
Accession Number: 20081118–5051.
Comment Date: 5 p.m. Eastern Time on Tuesday, December 9, 2008.

Take notice that the Commission received the following electric rate filings:

Docket Numbers: ER00–1712–010; ER00–1703–005; ER00–744–008; ER02–1327–007; ER02–2408–005; ER02–1749–005; ER02–1747–005; ER99–4503–007; ER00–2186–005; ER01–1559–006.
Applicants: Lower Mount Bethel Energy, LLC, PPL Brunner Island, LLC, PPL Edgewood Energy, LLC, PPL EnergyPlus, LLC, PPL Great Works, LLC, PPL Holtwood, LLC, PPL Maine, LLC, PPL Martins Creek, LLC, PPL Montour, LLC, PPL Shoreham Energy, LLC, PPL Susquehanna, LLC, PPL University Park, LLC, PPL Wallingford Energy LLC, PPL Electric Utilities Corporation.
Description: PPL East Companies' compliance filing.
Filed Date: 11/17/2008.
Accession Number: 20081117–5172.
Comment Date: 5 p.m. Eastern Time on Monday, December 8, 2008.

Docket Numbers: ER01–2569–007; ER01–2568–006; ER02–1175–006; ER98–4652–007.
Applicants: Boralex Ashland, LP; Boralex Livermore Falls LP; Boralex Fort Fairfield LP; Boralex Stratton Energy LP.
Description: Boralex Livermore Falls LP *et al.* submits a revision to the market-based rate tariffs in accordance with Order No. 697.
Filed Date: 11/13/2008.

Accession Number: 20081114–0152.
Comment Date: 5 p.m. Eastern Time on Thursday, December 4, 2008.

Docket Numbers: ER02–579–007.
Applicants: Capital District Energy Center Cogen.
Description: Capitol District Energy Center Cogeneration Associates submits a revised FERC Electric tariff to accompany the Application.
Filed Date: 11/12/2008.
Accession Number: 20081114–0150.
Comment Date: 5 p.m. Eastern Time on Wednesday, December 3, 2008.

Docket Numbers: ER02–580–008.
Applicants: Pawtucket Power Associates Limited Partn.
Description: Pawtucket Power Associates, LP submits a revised tariff in compliance with standardized tariff requirements of Order No. 697–A.
Filed Date: 11/12/2008.
Accession Number: 20081114–0146.
Comment Date: 5 p.m. Eastern Time on Wednesday, December 3, 2008.

Docket Numbers: ER02–237–011.
Applicants: J. Aron & Company.
Description: J. Aron & Company submits a revised tariff sheet to include in its rate schedule a separate provision regarding its Seller Category status.
Filed Date: 11/14/2008.
Accession Number: 20081117–0112.
Comment Date: 5 p.m. Eastern Time on Monday, December 1, 2008.

Docket Numbers: ER05–320–005; ER02–999–007; ER97–2460–010; ER97–2463–007.
Applicants: Unitil Energy Systems, Inc.; Unitil Power Corporation; Fitchburg Gas & Electric Light Co.
Description: Unitil Energy Systems, Inc *et al.* submits a supplement to the 1/14/08 filing of updated market power analysis.
Filed Date: 11/12/2008.
Accession Number: 20081114–0153.
Comment Date: 5 p.m. Eastern Time on Wednesday, December 3, 2008.

Docket Numbers: ER05–968–004.
Applicants: Basin Creek Equity Partners, LLC.
Description: Basin Creek Equity Partners, LLC submits an application for a finding by the Commission that it qualifies for Category 1 status and is exempt from the requirement to submit updated market power analyses etc.
Filed Date: 11/12/2008.
Accession Number: 20081114–0234.
Comment Date: 5 p.m. Eastern Time on Wednesday, December 3, 2008.

Docket Numbers: ER06–456–017; ER05–880–001; ER06–1271–012; ER06–954–013; ER07–424–008; EL07–57–004.
Applicants: PJM Interconnection L.L.C.
Description: PJM Interconnection, LLC submits revisions to Schedule 12—Appendix of the PJM Tariff in incorporate cost responsibility assignments for below 500 kV upgrades included in the PJM Regional Transmission Expansion Plan etc.
Filed Date: 11/14/2008.
Accession Number: 20081118–0048.
Comment Date: 5 p.m. Eastern Time on Friday, December 5, 2008.

Docket Numbers: ER06–635–004; ER95–1007–023; ER06–634–004.
Applicants: Edgecombe Genco, LLC; Logan Generating Company, LP Spruance Genco, LLC.
Description: Edgecombe Genco, LLC *et al.* submits an updated market power analysis in compliance with Order 697–A.
Filed Date: 11/12/2008.
Accession Number: 20081114–0149.
Comment Date: 5 p.m. Eastern Time on Wednesday, December 3, 2008.

Docket Numbers: ER06–758–005.
Applicants: Chambers Cogeneration, Limited Partnership.
Description: Chambers Cogeneration, LP submits a revised tariff in compliance with standardized tariff requirements of Order No. 697–A.
Filed Date: 11/12/2008.
Accession Number: 20081114–0145.
Comment Date: 5 p.m. Eastern Time on Wednesday, December 3, 2008.

Docket Numbers: ER06–1367–004; ER07–239–003; ER99–1714–007; ER06–745–003.
Applicants: BG Dighton Power, LLC, BG Energy Merchants, LLC, Lake Road Generating Company, LP, Masspower.
Description: BG Dighton Power, LLC *et al.* submits a revised updated market power analysis and compliance filing pursuant to Orders 697 and 697–A.
Filed Date: 11/13/2008.
Accession Number: 20081114–0151.
Comment Date: 5 p.m. Eastern Time on Thursday, December 4, 2008.

Docket Numbers: ER07–1212–001.
Applicants: Forked River Power LLC.
Description: Forked River Power, LLC submits a revised tariff in compliance with standardized tariff requirements of Order No. 697 and 697–A.
Filed Date: 11/12/2008.
Accession Number: 20081114–0147.
Comment Date: 5 p.m. Eastern Time on Wednesday, December 3, 2008.

Docket Numbers: ER09–279–000.
Applicants: Buffalo Ridge I LLC.
Description: Buffalo Ridge I LLC submits FERC Electric Tariff, Original Volume No. 1 etc. under ER09–279.
Filed Date: 11/14/2008.
Accession Number: 20081117–0029.
Comment Date: 5 p.m. Eastern Time on Friday, December 5, 2008.

Docket Numbers: ER09–281–000.
Applicants: Pebble Springs Wind.
Description: Pebble Springs Wind LLC submits FERC Electric Tariff, Original Volume No. 1 etc. under ER09–281.
Filed Date: 11/14/2008.
Accession Number: 20081117–0028.
Comment Date: 5 p.m. Eastern Time on Friday, December 5, 2008.

Docket Numbers: ER09–282–000.
Applicants: Moraine Wind II LLC.
Description: Moraine Wind II LLC submits FERC Electric Tariff, Original Volume No. 1 etc. under ER09–282.
Filed Date: 11/14/2008.
Accession Number: 20081117–0030.
Comment Date: 5 p.m. Eastern Time on Friday, December 5, 2008.

Docket Numbers: ER09–284–000.
Applicants: Southern California Edison Company.
Description: Southern California Edison Co submits revised rate sheets to the amended and restated Edison—AEPCO Load Control Agreement with Arizona Electric Power Cooperative, Inc.
Filed Date: 11/13/2008.
Accession Number: 20081114–0119.
Comment Date: 5 p.m. Eastern Time on Thursday, December 4, 2008.

Docket Numbers: ER09–285–000.
Applicants: Florida Power Corporation.
Description: Progress Energy Florida, Inc submits an executed operating agreement with Tampa Electric.
Filed Date: 11/13/2008.
Accession Number: 20081114–0118.
Comment Date: 5 p.m. Eastern Time on Thursday, December 4, 2008.

Docket Numbers: ER09–286–000.
Applicants: Nevada Power Company.
Description: NV Energy submits Notice of Cancellation of the Rate Schedule 6 for reactive Supply and Voltage Control that became effective as of 11/1/05.
Filed Date: 11/13/2008.
Accession Number: 20081114–0117.
Comment Date: 5 p.m. Eastern Time on Thursday, December 4, 2008.

Docket Numbers: ER09–288–000.
Applicants: Appalachian Power Company.
Description: Appalachian Power Company submits an Amended and Restated Interconnection Agreement, dated 11/13/08 with Kingsport Power Co, to be effective 1/1/09.
Filed Date: 11/13/2008.
Accession Number: 20081117–0027.
Comment Date: 5 p.m. Eastern Time on Friday, November 28, 2008.

Docket Numbers: ER09–289–000.
Applicants: New York Independent System Operator, In.
Description: New York Independent System Operator, Inc submits the

executed Coordination Agreement Between ISO New England, Inc and the NYISO.

Filed Date: 11/13/2008.

Accession Number: 20081117–0026.

Comment Date: 5 p.m. Eastern Time on Thursday, December 4, 2008.

Docket Numbers: ER09–291–000.

Applicants: ISO New England Inc.

Description: ISO New England Inc submits revisions to the Coordination Agreement with New York Independent System Operator, Inc.

Filed Date: 11/13/2008.

Accession Number: 20081117–0031.

Comment Date: 5 p.m. Eastern Time on Thursday, December 4, 2008.

Docket Numbers: ER09–292–000.

Applicants: California Independent System Operator C.

Description: California Independent System Operator Corp submits an Amended and Restated Metered Subsystem Agreement with City of Santa Clara.

Filed Date: 11/13/2008.

Accession Number: 20081117–0033.

Comment Date: 5 p.m. Eastern Time on Thursday, December 4, 2008.

Docket Numbers: ER09–293–000.

Applicants: Tri-Valley Corporation.

Description: Tri-Valley Corp submits a notice of cancellation of its FERC Electric Tariff, Original Volume 1.

Filed Date: 11/14/2008.

Accession Number: 20081117–0055.

Comment Date: 5 p.m. Eastern Time on Friday, December 5, 2008.

Docket Numbers: ER09–294–000.

Applicants: PacifiCorp.

Description: PacifiCorp submits revised Original Sheet 47A *et al.* to its FERC Electric Tariff, Seventh Revised Volume 11, effective 11/14/08.

Filed Date: 11/14/2008.

Accession Number: 20081117–0054.

Comment Date: 5 p.m. Eastern Time on Friday, December 5, 2008.

Docket Numbers: ER09–296–000.

Applicants: New York Independent System Operator, Inc.

Description: New York Independent System, Operator, Inc *et al.* submits an executed Amended and Restated Standard Small Generator Interconnection Agreement with Innovative Energy Systems, Inc.

Filed Date: 11/13/2008.

Accession Number: 20081117–0032.

Comment Date: 5 p.m. Eastern Time on Thursday, December 4, 2008.

Docket Numbers: ER09–297–000; ER05–1511–004; ER07–1246–001.

Applicants: Michigan Wind 1, LLC; Noble Thumb Windpark I, LLC; Harvest WindFarm, LLC.

Description: Michigan Wind 1, LLC *et al.* submits Notice of Change in Status in conncetion with the acquisition by John Deere Renewables, LLC from Noble Thumb Windpark, LLC of 100 percent ownership interests.

Filed Date: 11/13/2008.

Accession Number: 20081117–0056.

Comment Date: 5 p.m. Eastern Time on Thursday, December 4, 2008.

Any person desiring to intervene or to protest in any of the above proceedings must file in accordance with Rules 211 and 214 of the Commission's Rules of Practice and Procedure (18 CFR 385.211 and 385.214) on or before 5 p.m. Eastern time on the specified comment date. It is not necessary to separately intervene again in a subdocket related to a compliance filing if you have previously intervened in the same docket. Protests will be considered by the Commission in determining the appropriate action to be taken, but will not serve to make protestants parties to the proceeding. Anyone filing a motion to intervene or protest must serve a copy of that document on the Applicant. In reference to filings initiating a new proceeding, interventions or protests submitted on or before the comment deadline need not be served on persons other than the Applicant.

The Commission encourages electronic submission of protests and interventions in lieu of paper, using the FERC Online links at *http://www.ferc.gov.* To facilitate electronic service, persons with Internet access who will eFile a document and/or be listed as a contact for an intervenor must create and validate an eRegistration account using the eRegistration link. Select the eFiling link to log on and submit the intervention or protests.

Persons unable to file electronically should submit an original and 14 copies of the intervention or protest to the Federal Energy Regulatory Commission, 888 First St., NE., Washington, DC 20426.

The filings in the above proceedings are accessible in the Commission's eLibrary system by clicking on the appropriate link in the above list. They are also available for review in the Commission's Public Reference Room in Washington, DC. There is an eSubscription link on the Web site that enables subscribers to receive e-mail notification when a document is added to a subscribed docket(s). For assistance with any FERC Online service, please e-mail *FERCOnlineSupport@ferc.gov* or call (866) 208–3676 (toll free). For TTY, call (202) 502–8659.

Nathaniel J. Davis, Sr.,

Deputy Secretary.

[FR Doc. E8–31066 Filed 12–30–08; 8:45 am]

BILLING CODE 6717–01–P

DEPARTMENT OF ENERGY

Federal Energy Regulatory Commission

[Docket No. NJ08–3–001]

Southwestern Power Administration; Notice of Filing

December 23, 2008.

Take notice that on December 16, 2008, Southwestern Power Administration filed revisions to its non-jurisdictional open access transmission tariff, incorporating changes to its Attachment O—Transmission Planning Process in compliance with the Commission's September 18, 2008 Order. *Southwestern Power Administration,* 124 FERC ¶ 61, 261 (2008).

Any person desiring to intervene or to protest this filing must file in accordance with Rules 211 and 214 of the Commission's Rules of Practice and Procedure (18 CFR 385.211, 385.214). Protests will be considered by the Commission in determining the appropriate action to be taken, but will not serve to make protestants parties to the proceeding. Any person wishing to become a party must file a notice of intervention or motion to intervene, as appropriate. Such notices, motions, or protests must be filed on or before the comment date. Anyone filing a motion to intervene or protest must serve a copy of that document on the Applicant and all the parties in this proceeding.

The Commission encourages electronic submission of protests and interventions in lieu of paper using the ''eFiling'' link at *http://www.ferc.gov.* Persons unable to file electronically should submit an original and 14 copies of the protest or intervention to the Federal Energy Regulatory Commission, 888 First Street, NE., Washington, DC 20426.

This filing is accessible on-line at *http://www.ferc.gov,* using the ''eLibrary'' link and is available for review in the Commission's Public Reference Room in Washington, DC. There is an ''eSubscription'' link on the Web site that enables subscribers to receive e-mail notification when a document is added to a subscribed docket(s). For assistance with any FERC Online service, please e-mail

FERCOnlineSupport@ferc.gov, or call (866) 208–3676 (toll free). For TTY, call (202) 502–8659.

Comment Date: 5 p.m. Eastern Time on January 6, 2009.

Kimberly D. Bose,

Secretary.

[FR Doc. E8–31107 Filed 12–30–08; 8:45 am]

BILLING CODE 6717–01–P

DEPARTMENT OF ENERGY

Federal Energy Regulatory Commission

[Docket No. RM98–1–000]

Records Governing Off-the-Record Communications; Public Notice

December 23, 2008.

This constitutes notice, in accordance with 18 CFR 385.2201(b), of the receipt of prohibited and exempt off-the-record communications.

Order No. 607 (64 FR 51222, September 22, 1999) requires Commission decisional employees, who make or receive a prohibited or exempt off-the-record communication relevant to the merits of a contested proceeding, to deliver to the Secretary of the Commission, a copy of the communication, if written, or a summary of the substance of any oral communication.

Prohibited communications are included in a public, non-decisional file associated with, but not a part of, the decisional record of the proceeding. Unless the Commission determines that the prohibited communication and any responses thereto should become a part of the decisional record, the prohibited off-the-record communication will not be considered by the Commission in reaching its decision. Parties to a proceeding may seek the opportunity to respond to any facts or contentions made in a prohibited off-the-record communication, and may request that the Commission place the prohibited communication and responses thereto in the decisional record. The Commission will grant such a request only when it determines that fairness so requires. Any person identified below as having made a prohibited off-the-record communication shall serve the document on all parties listed on the official service list for the applicable proceeding in accordance with Rule 2010, 18 CFR 385.2010.

Exempt off-the-record communications are included in the decisional record of the proceeding, unless the communication was with a cooperating agency as described by 40 CFR 1501.6, made under 18 CFR 385.2201(e)(1)(v).

The following is a list of off-the-record communications recently received by the Secretary of the Commission. The communications listed are grouped by docket numbers in ascending order. These filings are available for review at the Commission in the Public Reference Room or may be viewed on the Commission's Web site at *http://www.ferc.gov* using the eLibrary link. Enter the docket number, excluding the last three digits, in the docket number field to access the document. For assistance, please contact FERC, Online Support at *FERCOnlineSupport@ferc.gov* or toll-free at (866) 208–3676, or for TTY, contact (202) 502–8659.

Docket No.	File date	Presenter or requester
Prohibited:		
1. EC09–6–000	12–19–08	Mr. Prescott Lovern [1].

[1] Memorandum for the Record of phone call communication.

Kimberly D. Bose,

Secretary.

[FR Doc. E8–31106 Filed 12–30–08; 8:45 am]

BILLING CODE 6717–01–P

DEPARTMENT OF ENERGY

Federal Energy Regulatory Commission

[Docket No. CP09–41–000]

Crossroads Pipeline Company; Notice of Request Under Blanket Authorization

December 23, 2008.

Take notice that on December 22, 2008, Crossroads Pipeline Company (Crossroads), 801 East 86th Avenue, Merrillville, IN 46410, filed a prior notice request pursuant to sections 157.205 and 157.208 of the Commission's regulations under the Natural Gas Act (NGA) and Crossroads' blanket certificate issued in Docket No. CP94–342–000, for NGA certification of an existing compressor station located in Lake County, Indiana, all as more fully set forth in the application, which is on file with the Commission and open to public inspection. The filing may also be viewed on the Web at *http://www.ferc.gov* using the ''eLibrary'' link. Enter the docket number excluding the last three digits in the docket number field to access the document. For assistance, contact FERC at *FERCOnlineSupport@ferc.gov* or call toll-free, (866) 208–3676 or TTY, (202) 502–8659.

Specifically, Crossroads requests NGA certification for its existing 3,000 horsepower Schererville Compressor Station located in Lake County, Indiana. Crossroads states that the Schererville Compressor Station was constructed for transactions under the Natural Gas Policy Act (NGPA) section 311 to provide transportation. Crossroads asserts that the Schererville Compressor Station was placed in service on January 27, 1997, and constructed at a cost of approximately $4.7 million to allow for the receipt of natural gas into Crossroads system from the pipeline facilities of Natural Gas Pipeline Company of America (Natural). Crossroads states that Natural constructed approximately 7 miles of pipeline facilities to interconnect with the Schererville Compressor Station. Crossroads also asserts that there will be no impact on Crossroads' existing design day and annual obligations to its customers.

Any questions regarding the application should be directed to Fredric J. George, Lead Counsel, Crossroads Pipeline Company, P.O. Box 1273, Charleston, West Virginia 25325–1273, at (304) 357–2359.

Any person may, within 60 days after the issuance of the instant notice by the Commission, file pursuant to Rule 214 of the Commission's Procedural Rules (18 CFR 385.214) a motion to intervene or notice of intervention. Any person filing to intervene or the Commission's staff may, pursuant to section 157.205 of the Commission's regulations under the NGA (18 CFR 157.205) file a protest to the request. If no protest is filed within the time allowed therefore, the proposed activity shall be deemed to be authorized effective the day after the time allowed for protest. If a protest is filed and not withdrawn within 30 days after the time allowed for filing a protest, the instant request shall be treated as an application for authorization pursuant to section 7 of the NGA.

The Commission strongly encourages electronic filings of comments, protests, and interventions via the Internet in lieu of paper. See 18 CFR 385.2001(a)(1)(iii) and the instructions on the Commission's Web site (*http://www.ferc.gov*) under the ''e-Filing'' link.

Kimberly D. Bose,

Secretary.

[FR Doc. E8–31109 Filed 12–30–08; 8:45 am]

BILLING CODE 6717–01–P

ENVIRONMENTAL PROTECTION AGENCY

[FRL–8759–3]

Notice of Availability of Preliminary Residual Designation of Certain Storm Water Discharges in the State of Maine Under the National Pollutant Discharge Elimination System of the Clean Water Act

AGENCY: Environmental Protection Agency.

ACTION: Notice and request for public comment.

SUMMARY: The Regional Administrator of the Environmental Protection Agency's (EPA) New England Regional Office is providing notice of availability of a preliminary determination that certain storm water discharges in the Long Creek watershed located in South Portland, Westbrook, Scarborough, and Portland, Maine will be required to obtain permit coverage under the National Pollutant Discharge Elimination System (NPDES) permits under the Clean Water Act. EPA is seeking public comment on the nature and scope of this preliminary residual designation. The period for comment on this preliminary residual designation will remain open until the close of the public comment period on any NPDES general or individual permit related to this preliminary residual designation. However, EPA strongly encourages interested parties to submit their comments within 45 days of the commencement of the comment period, after which EPA intends to review this preliminary residual designation and to decide whether to make any changes to it. It is EPA's intention to make a final residual designation following the close of the comment period on any associated NPDES permit. Copies of the preliminary residual designation are available for inspection online and in hardcopy as described elsewhere in this notice document.

DATES: Comments must be submitted on or before February 17, 2009.

ADDRESSES: Submit your comments, identified by Docket ID No. EPA–R01–OW–2008–0910 by one of the following methods:

- *http://www.regulations.gov:* Follow the on-line instructions for submitting comments.
- *E-mail: bridge.jennie@epa.gov.*
- *Mail and hand delivery:* U.S. Environmental Protection Agency, New England Region, One Congress Street, Suite 1100, Mail code CWQ, Boston, MA 02114–2023. Deliveries are only accepted during the Regional Office's normal hours of operation (8 a.m. to 5 p.m., Monday through Friday, excluding legal holidays), and special arrangements should be made for deliveries of boxed information.

Instructions: Direct your comments to Docket ID No. EPA–R01–OW–2008–0910. EPA's policy is that all comments received will be included in the public docket without change and may be made available online at *http://www.regulations.gov,* including any personal information provided, unless the comment includes information claimed to be Confidential Business Information (CBI) or other information whose disclosure is restricted by statute. Do not submit information that you consider to be CBI or otherwise protected through *http://www.regulations.gov,* or e-mail. The *http://www.regulations.gov* Web site is an ''anonymous access'' system, which means EPA will not know your identity or contact information unless you provide it in the body of your comment. If you send an e-mail comment directly to EPA without going through *http://www.regulations.gov* your e-mail address will be automatically captured and included as part of the comment that is placed in the public docket and made available on the Internet. If you submit an electronic comment, EPA recommends that you include your name and other contact information in the body of your comment and with any disk or CD–ROM you submit. If EPA cannot read your comment due to technical difficulties and cannot contact you for clarification, EPA may not be able to consider your comment. Electronic files should avoid the use of special characters, any form of encryption, and be free of any defects or viruses.

Docket: All documents in the docket are listed in the *http://www.regulations.gov* index. Although listed in the index, some information is not publicly available, e.g., CBI or other information whose disclosure is restricted by statute. Certain other material, such as copyrighted material, will be publicly available only in hard copy. Publicly available docket materials are available either electronically in *http://www.regulations.gov* or in hard copy at the U.S. Environmental Protection Agency, New England Region, One Congress Street, Suite 1100, Boston, Massachusetts. To inspect the hard copy materials, please schedule an appointment during normal business hours with the contact listed in the **FOR FURTHER INFORMATION CONTACT** section.

FOR FURTHER INFORMATION CONTACT: Jennie Bridge, EPA New England Region, One Congress Street, Suite 1100, Mail code CWQ, (617) 918–1685, *bridge.jennie@epa.gov.*

SUPPLEMENTARY INFORMATION: The Regional Administrator of EPA's New England Regional Office is providing notice of availability of a preliminary determination that certain storm water discharges in the Long Creek watershed located in South Portland, Westbrook, Scarborough, and Portland, Maine will be required to obtain NPDES permits. Under Clean Water Act (CWA) Section 402(p), 33 U.S.C. 1342(p), Congress required the EPA to establish permitting requirements for certain storm water discharges. In addition, CWA Sections 402(p)(2)(E) and 402(p)(6) and implementing regulations at 40 CFR 122.26 (a)(9)(i)(D) provide that the EPA Regional Administrator may designate additional storm water discharges as requiring NPDES permits where he determines that the discharge, or category of discharges within a geographic area, contributes to a violation of a water quality standard or is a significant contributor of pollutants to waters of the United States.

The EPA Regional Administrator for the New England Region has made a preliminary determination pursuant to Section 402(p) of the Clean Water Act and 40 CFR 122.26 (9)(i)(D) that storm water controls and NPDES permits are needed for discharges to waters of the United States from impervious surfaces equal to or greater than one acre in the Long Creek watershed located in South Portland, Westbrook, Scarborough, and Portland, Maine. Details of the preliminary determination are available in the preliminary residual designation document. This document may be viewed on the EPA New England Regional Office's Web page *http://www.epa.gov/region01/npdes/stormwater/assets/pdfs/LongCreekRD.pdf* and at *http://www.regulations.gov.* Ancillary materials may be viewed at the EPA New England Regional Office's Web page *http://www.epa.gov/region01/npdes/stormwater/index.html.*

Dated: December 16, 2008.

Robert W. Varney,

Regional Administrator, New England Region.

[FR Doc. E8–31178 Filed 12–30–08; 8:45 am]

BILLING CODE 6560–50–P

ENVIRONMENTAL PROTECTION AGENCY

[EPA–HQ–OPP–2008–0533; FRL–8392–1]

Notice of Filing of Pesticide Petition on Food Contact Surfaces

AGENCY: Environmental Protection Agency (EPA).

ACTION: Notice.

SUMMARY: This notice announces the initial filing of pesticide petitions proposing the amendment of regulations 40 CFR 180.940(a) for residues of antimicrobial pesticide formulation containing n-Alkyl(C12-C14) dimethyl ethylbenzyl ammonium chlorides applied to food contact surfaces in public eating places, dairy processing equipment, and food processing equipment and utensils.

DATES: Comments must be received on or before January 30, 2009.

ADDRESSES: Submit your comments, identified by docket identification (ID) number EPA–HQ–OPP–2008–0533 and pesticide petition number (PP), by one of the following methods:

• *Federal eRulemaking Portal*: *http://www.regulations.gov*. Follow the on-line instructions for submitting comments.

• *Mail*: Office of Pesticide Programs (OPP) Regulatory Public Docket (7502P), Environmental Protection Agency, 1200 Pennsylvania Ave., NW., Washington, DC 20460–0001.

• *Delivery*: OPP Regulatory Public Docket (7502P), Environmental Protection Agency, Rm. S-4400, One Potomac Yard (South Bldg.), 2777 S. Crystal Dr., Arlington, VA. Deliveries are only accepted during the Docket's normal hours of operation (8:30 a.m. to 4 p.m., Monday through Friday, excluding legal holidays). Special arrangements should be made for deliveries of boxed information. The Docket telephone number is (703) 305–5805.

Instructions: Direct your comments to docket ID number EPA–HQ–OPP–2008–0533. EPA's policy is that all comments received will be included in the docket without change and may be made available on-line at *http://www.regulations.gov*, including any personal information provided, unless the comment includes information claimed to be Confidential Business Information (CBI) or other information whose disclosure is restricted by statute. Do not submit information that you consider to be CBI or otherwise protected through regulations.gov or e-mail. The Federal regulations.gov website is an ''anonymous access'' system, which means EPA will not know your identity or contact information unless you provide it in the body of your comment. If you send an e-mail comment directly to EPA without going through regulations.gov, your e-mail address will be automatically captured and included as part of the comment that is placed in the docket and made available on the Internet. If you submit an electronic comment, EPA recommends that you include your name and other contact information in the body of your comment and with any disk or CD-ROM you submit. If EPA cannot read your comment due to technical difficulties and cannot contact you for clarification, EPA may not be able to consider your comment. Electronic files should avoid the use of special characters, any form of encryption, and be free of any defects or viruses.

Docket: All documents in the docket are listed in the docket index. Although listed in the index, some information is not publicly available, e.g., CBI or other information whose disclosure is restricted by statute. Certain other material, such as copyrighted material, is not placed on the Internet and will be publicly available only in hard copy form. Publicly available docket materials are available either in the electronic docket at *http://www.regulations.gov*, or, if only available in hard copy, at the OPP Regulatory Public Docket in Rm. S-4400, One Potomac Yard (South Bldg.), 2777 S. Crystal Dr., Arlington, VA. The hours of operation of this Docket Facility are from 8:30 a.m. to 4 p.m., Monday through Friday, excluding legal holidays. The Docket telephone number is (703) 305–5805.

FOR FURTHER INFORMATION CONTACT: Velma Noble, Antimicrobials Division (7510 P), Office of Pesticide Programs, Environmental Protection Agency, 1200 Pennsylvania Ave., NW., Washington, DC 20460; telephone number: (703) 308–6233, email; *noble.velma@epa.gov*.

SUPPLEMENTARY INFORMATION:

I. General Information

A. Does this Action Apply to Me?

You may be potentially affected by this action if you are an agricultural producer, food manufacturer, or pesticide manufacturer. Potentially affected entities may include, but are not limited to:

• Crop production (NAICS code 111).

• Animal production (NAICS code 112).

• Food manufacturing (NAICS code 311).

• Pesticide manufacturing (NAICS code 32532).

This listing is not intended to be exhaustive, but rather provides a guide for readers regarding entities likely to be affected by this action. Other types of entities not listed in this unit could also be affected. The North American Industrial Classification System (NAICS) codes have been provided to assist you and others in determining whether this action might apply to certain entities. If you have any questions regarding the applicability of this action to a particular entity, consult the person listed at the end of the pesticide petition summary of interest.

B. What Should I Consider as I Prepare My Comments for EPA?

1. *Submitting CBI*. Do not submit this information to EPA through regulations.gov or e-mail. Clearly mark the part or all of the information that you claim to be CBI. For CBI information in a disk or CD ROM that you mail to EPA, mark the outside of the disk or CD ROM as CBI and then identify electronically within the disk or CD ROM the specific information that is claimed as CBI. In addition to one complete version of the comment that includes information claimed as CBI, a copy of the comment that does not contain the information claimed as CBI must be submitted for inclusion in the public docket. Information so marked will not be disclosed except in accordance with procedures set forth in 40 CFR part 2.

2. *Tips for preparing your comments*. When submitting comments, remember to:

i. Identify the document by docket number and other identifying information (subject heading, **Federal Register** date and page number).

ii. Follow directions. The Agency may ask you to respond to specific questions or organize comments by referencing a Code of Federal Regulations (CFR) part or section number.

iii. Explain why you agree or disagree; suggest alternatives and substitute language for your requested changes.

iv. Describe any assumptions and provide any technical information and/or data that you used.

v. If you estimate potential costs or burdens, explain how you arrived at your estimate in sufficient detail to allow for it to be reproduced.

vi. Provide specific examples to illustrate your concerns, and suggest alternatives.

vii. Explain your views as clearly as possible, avoiding the use of profanity or personal threats.

viii. Make sure to submit your comments by the comment period deadline identified.

II. What Action is the Agency Taking?

EPA is printing a summary of each pesticide petition received under section 408 of the Federal Food, Drug, and Cosmetic Act (FFDCA), 21 U.S.C. 346a, proposing the establishment or amendment of regulations in 40 CFR part 180 for residues of pesticide chemicals in or on various food commodities. EPA has determined that this pesticide petition contains data or information regarding the elements set forth in FFDCA section 408(d)(2); however, EPA has not fully evaluated the sufficiency of the submitted data at this time or whether the data support granting of the pesticide petition. Additional data may be needed before EPA rules on this pesticide petition.

Pursuant to 40 CFR 180.7(f), a summary of the petition included in this notice, prepared by the petitioner along with a description of the analytical method available for the detection and measurement of the pesticide chemical residues is available on EPA's Electronic Docket at *http://www.regulations.gov/*. To locate this information on the home page of EPA's Electronic Docket, select ''Quick Search'' and type the OPP docket ID number. Once the search has located the docket, clicking on the ''Docket ID'' will bring up a list of all documents in the docket for the pesticide including the petition summary.

Amendment to Existing Tolerance Exemption

PP 8F7323. Stepan Company, 22 West Frontage Rd., Northfield, IL 60093, proposes to amend the tolerance in 40 CFR 180.190(a) for residues of the antimicrobial pesticide formulations containing n-Alkyl (C12-C14) dimethyl ethylbenzyl ammonium chlorides that may be applied to food contact surfaces in public eating places, dairy processing equipment, and food processing equipment and utensils. When ready for use, end-use concentration of total quaternary chemicals, n-Alkyl (C12-C14) dimethyl ethylbenzyl ammonium chlorides, in solution is not to exceed 400 parts per million (ppm). Analytical method is not necessary since these quaternary ammonium compounds are exempt from the requirement of a tolerance.

List of Subjects

Environmental protection, Food Contact Sanitizers, ADBAC, Food additives, Pesticides and pests, Reporting and recordkeeping requirements.

Dated: December 17, 2008.

Joan Harrigan-Farrelly,

Director, Antimicrobials Division, Office of Pesticide Programs.

[FR Doc. E8–31008 Filed 12–30–08; 8:45 am]

BILLING CODE 6560–50–S

ENVIRONMENTAL PROTECTION AGENCY

[FRL–8756–9]

Farm, Ranch, and Rural Communities Committee

AGENCY: Environmental Protection Agency (EPA).

ACTION: Notice of meeting.

SUMMARY: Under the Federal Advisory Committee Act, Public Law 92–463, EPA gives notice of a meeting of the Farm, Ranch, and Rural Communities Committee (FRRCC). The purpose of the FRRCC is to provide advice to the Administrator of EPA on environmental issues and programs that impact, or are of concern to, farms, ranches, and rural communities. The FRRCC is a part of EPA's efforts to expand cooperative working relationships with the agriculture industry and others who are interested in agricultural issues to achieve greater progress in environmental protection.

The purpose of this teleconference is to discuss and approve the draft FRRCC recommendations on EPA's Draft Biofuels Strategy. A copy of the meeting agenda will be posted at *http://www.epa.gov/ocemlfrrcc.*

DATES: FRRCC will hold a public teleconference on Wednesday, January 14, 2009, from 4 p.m.–6 p.m. Eastern Standard Time.

ADDRESSES: The meeting will be held in the U.S. EPA East Building, 1201 Constitution Ave., NW., Room 1132, Washington, DC 20004.

FOR FURTHER INFORMATION CONTACT: Alicia Kaiser, Designated Federal Officer, *kaiser.aliciaepa.gov,* 202–564–7273, U.S. EPA, Office of the Administrator (1 1O1A), 1200 Pennsylvania Avenue, NW., Washington, DC 20460, or Christopher Ashcraft, Junior Designated Federal Officer, *ashcraft.christopher@epa.gov,* 202–564–2432, U.S. EPA, Office of the Administrator (1601M), 1200 Pennsylvania Avenue, NW., Washington, DC 20460.

SUPPLEMENTARY INFORMATION: Requests to make oral comments or to provide written comments to the FRRCC should be sent to Alicia Kaiser, Designated Federal Officer, at the contact information above by Wednesday, January 7, 2009. The public is welcome to attend all portions of the meeting, but seating is limited and is allocated on a first-come, first-serve basis. Members of the public wishing to gain access to the teleconference must contact Alicia Kaiser at (202) 564–7273 or *kaiser.alicia@epa.gov* by January 7, 2009.

Meeting Access: For information on access or services for individuals with disabilities, please contact Alicia Kaiser at 202–564–7273 or *kaiser.alicia@epa.gov.* To request accommodation of a disability, please contact Alicia Kaiser, preferably at least 10 days prior to the meeting, to give EPA as much time as possible to process your request.

Dated: December 18, 2008.

Alicia Kaiser,

Designated Federal Officer.

[FR Doc. E8–30723 Filed 12–30–08; 8:45 am]

BILLING CODE 6560–50–M

ENVIRONMENTAL PROTECTION AGENCY

[EPA–HQ–OPP–2008–0893; FRL–8395–3]

Fomesafen; Notice of Receipt of Request To Voluntarily Cancel Pesticide Registrations

AGENCY: Environmental Protection Agency (EPA).

ACTION: Notice.

SUMMARY: In accordance with section 6(f)(1) of the Federal Insecticide, Fungicide, and Rodenticide Act (FIFRA), as amended, EPA is issuing a notice of receipt of a request by the registrant to voluntarily cancel the registration of certain products containing the pesticide fomesafen. The request would not terminate the last fomesafen products registered for use in the United States. EPA intends to grant this request at the close of the comment period for this announcement unless the Agency receives substantive comments within the comment period that would merit its further review of the request, or unless the registrant withdraws the request within this period. Upon acceptance of this request, any sale, distribution, or use of products listed in this notice will be permitted only if such sale, distribution, or use is

consistent with the terms as described in the final order.

DATES: Comments must be received on or before January 30, 2009.

ADDRESSES: Submit your comments, identified by docket identification (ID) number EPA–HQ–OPP–2008-0893, by one of the following methods:

• *Federal eRulemaking Portal*: *http://www.regulations.gov*. Follow the on-line instructions for submitting comments.

• *Mail*: Office of Pesticide Programs (OPP) Regulatory Public Docket (7502P), Environmental Protection Agency, 1200 Pennsylvania Ave., NW., Washington, DC 20460–0001.

• *Delivery*: OPP Regulatory Public Docket (7502P), Environmental Protection Agency, Rm. S–4400, One Potomac Yard (South Bldg.), 2777 S. Crystal Dr., Arlington, VA. Deliveries are only accepted during the Docket Facility's normal hours of operation (8:30 a.m. to 4 p.m., Monday through Friday, excluding legal holidays). Special arrangements should be made for deliveries of boxed information. The Docket Facility telephone number is (703) 305–5805.

Instructions: Direct your comments to docket ID number EPA–HQ–OPP–2008–0893. EPA's policy is that all comments received will be included in the docket without change and may be made available on-line at *http://www.regulations.gov*, including any personal information provided, unless the comment includes information claimed to be Confidential Business Information (CBI) or other information whose disclosure is restricted by statute. Do not submit information that you consider to be CBI or otherwise protected through regulations.gov or e-mail. The regulations.gov website is an ''anonymous access'' system, which means EPA will not know your identity or contact information unless you provide it in the body of your comment. If you send an e-mail comment directly to EPA without going through regulations.gov, your e-mail address will be automatically captured and included as part of the comment that is placed in the docket and made available on the Internet. If you submit an electronic comment, EPA recommends that you include your name and other contact information in the body of your comment and with any disk or CD-ROM you submit. If EPA cannot read your comment due to technical difficulties and cannot contact you for clarification, EPA may not be able to consider your comment. Electronic files should avoid the use of special characters, any form of encryption, and be free of any defects or viruses.

Docket: All documents in the docket are listed in the docket index available at *http://www.regulations.gov*. Although listed in the index, some information is not publicly available, e.g., CBI or other information whose disclosure is restricted by statute. Certain other material, such as copyrighted material, is not placed on the Internet and will be publicly available only in hard copy form. Publicly available docket materials are available either in the electronic docket at *http://www.regulations.gov*, or, if only available in hard copy, at the OPP Regulatory Public Docket in Rm. S–4400, One Potomac Yard (South Bldg.), 2777 S. Crystal Dr., Arlington, VA. The hours of operation of this Docket Facility are from 8:30 a.m. to 4 p.m., Monday through Friday, excluding legal holidays. The Docket Facility telephone number is (703) 305–5805.

FOR FURTHER INFORMATION CONTACT: Wilhelmena Livingston, Special Review and Reregistration Division (7508P), Office of Pesticide Programs, Environmental Protection Agency, 1200 Pennsylvania Ave., NW., Washington, DC 20460–0001; telephone number: (703) 308–8025; fax number: (703) 308–8005; e-mail address: *livngston.wilhelmena@epa.gov*.

SUPPLEMENTARY INFORMATION:

I. General Information

A. Does This Action Apply to Me?

This action is directed to the public in general, and may be of interest to a wide range of stakeholders including environmental, human health, and agricultural advocates; the chemical industry; pesticide users; and members of the public interested in the sale, distribution, or use of pesticides. Since others also may be interested, the Agency has not attempted to describe all the specific entities that may be affected by this action. If you have any questions regarding the applicability of this action to a particular entity, consult the person listed under **FOR FURTHER INFORMATION CONTACT**.

B. What Should I Consider as I Prepare My Comments for EPA?

1. *Submitting CBI*. Do not submit this information to EPA through regulations.gov or e-mail. Clearly mark the part or all of the information that you claim to be CBI. For CBI information in a disk or CD-ROM that you mail to EPA, mark the outside of the disk or CD-ROM as CBI and then identify electronically within the disk or CD-ROM the specific information that is claimed as CBI. In addition to one complete version of the comment that includes information claimed as CBI, a copy of the comment that does not contain the information claimed as CBI must be submitted for inclusion in the public docket. Information so marked will not be disclosed except in accordance with procedures set forth in 40 CFR part 2.

2. *Tips for preparing your comments*. When submitting comments, remember to:

i. Identify the document by docket ID number and other identifying information (subject heading, **Federal Register** date and page number).

ii. Follow directions. The Agency may ask you to respond to specific questions or organize comments by referencing a Code of Federal Regulations (CFR) part or section number.

iii. Explain why you agree or disagree; suggest alternatives and substitute language for your requested changes.

iv. Describe any assumptions and provide any technical information and/or data that you used.

v. If you estimate potential costs or burdens, explain how you arrived at your estimate in sufficient detail to allow for it to be reproduced.

vi. Provide specific examples to illustrate your concerns and suggest alternatives.

vii. Explain your views as clearly as possible, avoiding the use of profanity or personal threats.

viii. Make sure to submit your comments by the comment period deadline identified.

II. Background on the Receipt of Requests to Cancel Registrations

This notice announces receipt by EPA of a request from BASF to cancel two fomesafen product registrations. Fomesafen is a pre-plant, pre-emergence and post-emergence herbicide used on soybeans, snap beans, dry beans, and cotton. It is also registered for use on agricultural fallow/idleland, nonagricultural uncultivated areas/soils, pine (forest/shelterbelt) and pine (seed orchard). In a letter dated November 4, 2008, BASF requested EPA to cancel affected product registrations of pesticide product registrations identified in this notice in Table 1. Specifically, BASF request cancellation of their two end-use products for fomesafen registered in the United States.

III. What Action is the Agency Taking?

This notice announces receipt by EPA of a request from a registrant to cancel fomesafen product registrations. The affected products and the registrant making the request are identified in Tables 1 and 2 of this unit.

Under section 6(f)(1)(A) of FIFRA, registrants may request, at any time, that their pesticide registrations be canceled or amended to terminate one or more pesticide uses. Section 6(f)(1)(B) of FIFRA requires that before acting on a request for voluntary cancellation, EPA must provide a 30–day public comment period on the request for voluntary cancellation or use termination. In addition, section 6(f)(1)(C) of FIFRA requires that EPA provide a 180–day comment period on a request for voluntary cancellation or termination of any minor agricultural use before granting the request, unless:

1. The registrant requests a waiver of the comment period, or
2. The Administrator determines that continued use of the pesticide would pose an unreasonable adverse effect on the environment.

The fomesafen registrant has requested that EPA waive the 180–day comment period. EPA will provide a 30–day comment period on the proposed request.

Unless a request is withdrawn by the registrant within 30 days of publication of this notice, or if the Agency determines that there are substantive comments that warrant further review of this request, an order will be issued canceling the affected registrations.

TABLE 1.— FOMESAFEN PRODUCT REGISTRATIONS WITH PENDING REQUESTS FOR CANCELLATION

Registration Number	Product Name	Company
7969-82	BAS 530 04 H herbicide.	BASF
7969-83	FASTER TM herbicide.	BASF

Table 2 of this unit includes the name and address of record for the registrant of the products listed in Table 1 of this unit.

TABLE 2.— REGISTRANT REQUESTING VOLUNTARY CANCELLATION

EPA Company Number	Company Name and Address
7969	BASF, 26 Davis Drive, Triangle Park, North Carolina 27709-3528

IV. What is the Agency's Authority for Taking this Action?

Section 6(f)(1) of FIFRA provides that a registrant of a pesticide product may at any time request that any of its pesticide registrations be canceled or amended to terminate one or more uses. FIFRA further provides that, before acting on the request, EPA must publish a notice of receipt of any such request in the **Federal Register**. Thereafter, following the public comment period, the Administrator may approve such a request.

V. Procedures for Withdrawal of Request and Considerations for Reregistration of Fomesafen

Registrants who choose to withdraw a request for cancellation must submit such withdrawal in writing to the person listed under **FOR FURTHER INFORMATION CONTACT**, postmarked before January 30, 2009. This written withdrawal of the request for cancellation will apply only to the applicable FIFRA section 6(f)(1) request listed in this notice. If the products(s) have been subject to a previous cancellation action, the effective date of cancellation and all other provisions of any earlier cancellation action are controlling.

VI. Provisions for Disposition of Existing Stocks

Existing stocks are those stocks of registered pesticide products which are currently in the United States and which were packaged, labeled, and released for shipment prior to the effective date of the cancellation action.

In any order issued in response to this request for cancellation of product registrations, EPA proposes to include the following provisions for the treatment of any existing stocks of the products identified or referenced in Table 1 in Unit III. Registrants may sell and distribute existing stocks for 1 year from the date of the use termination request. The products may be sold, distributed, and used by people other than the registrant until existing stocks have been exhausted, provided that such sale, distribution, and use complies with the EPA-approved label and labeling of the product.

If the request for voluntary cancellation is granted, the Agency intends to publish the cancellation order in the **Federal Register**.

List of Subjects

Environmental protection, Pesticides and pests.

Steven Bradbury,

Director, Special Review and Reregistration Division, Office of Pesticide Programs.

[FR Doc. E8–31009 Filed 12–30–08; 8:45 am]

BILLING CODE 6560–50–S

ENVIRONMENTAL PROTECTION AGENCY

[FRL–8759–4]

Recent Posting to the Applicability Determination Index (ADI) Database System of Agency Applicability Determinations, Alternative Monitoring Decisions, and Regulatory Interpretations Pertaining to Standards of Performance for New Stationary Sources, National Emission Standards for Hazardous Air Pollutants, and the Stratospheric Ozone Protection Program

AGENCY: Environmental Protection Agency (EPA).

ACTION: Notice of Availability.

SUMMARY: This notice announces applicability determinations, alternative monitoring decisions, and regulatory interpretations that EPA has made under the New Source Performance Standards (NSPS); the National Emission Standards for Hazardous Air Pollutants (NESHAP); and the Stratospheric Ozone Protection Program.

FOR FURTHER INFORMATION CONTACT: An electronic copy of each complete document posted on the Applicability Determination Index (ADI) database system is available on the Internet through the Office of Enforcement and Compliance Assurance (OECA) Web site at: *http://www.epa.gov/compliance/monitoring/programs/caa/adi.html.* The document may be located by control number, date, author, subpart, or subject search. For questions about the ADI or this notice, contact Maria Malave at EPA by phone at: (202) 564–7027, or by e-mail at: *malave.maria@epa.gov.* For technical questions about the individual applicability determinations or monitoring decisions, refer to the contact person identified in the individual documents, or in the absence of a contact person, refer to the author of the document.

SUPPLEMENTARY INFORMATION: *Background:* The General Provisions to the NSPS in 40 Code of Federal Regulations (CFR) part 60 and the NESHAP in 40 CFR part 61 provide that a source owner or operator may request a determination of whether certain intended actions constitute the commencement of construction, reconstruction, or modification. EPA's written responses to these inquiries are commonly referred to as applicability determinations. *See* 40 CFR 60.5 and 61.06. Although the part 63 NESHAP and section 111(d) of the Clean Air Act regulations contain no specific

regulatory provision that sources may request applicability determinations, EPA does respond to written inquiries regarding applicability for the part 63 and section 111(d) programs. The NSPS and NESHAP also allow sources to seek permission to use monitoring or recordkeeping that are different from the promulgated requirements. *See* 40 CFR 60.13(i), 61.14(g), 63.8(b)(1), 63.8(f), and 63.10(f). EPA's written responses to these inquiries are commonly referred to as alternative monitoring decisions. Furthermore, EPA responds to written inquiries about the broad range of NSPS and NESHAP regulatory requirements as they pertain to a whole source category. These inquiries may pertain, for example, to the type of sources to which the regulation applies, or to the testing, monitoring, recordkeeping or reporting requirements contained in the regulation. EPA's written responses to these inquiries are commonly referred to as regulatory interpretations.

EPA currently compiles EPA-issued NSPS and NESHAP applicability determinations, alternative monitoring decisions, and regulatory interpretations, and posts them on the ADI on a quarterly basis. In addition, the ADI contains EPA-issued responses to requests pursuant to the stratospheric ozone regulations, contained in 40 CFR part 82. The ADI is an electronic index on the Internet with over one thousand EPA letters and memoranda pertaining to the applicability, monitoring, recordkeeping, and reporting requirements of the NSPS and NESHAP. The letters and memoranda may be searched by date, office of issuance, subpart, citation, control number or by string word searches.

Today's notice comprises a summary of 107 such documents added to the ADI on December 12, 2008 and December 23, 2008. The subject, author, recipient, date and header of each letter and memorandum are listed in this notice, as well as a brief abstract of the letter or memorandum. Complete copies of these documents may be obtained from the ADI through the OECA Web site at: *http://www.epa.gov/compliance/monitoring/programs/caa/adi.html.*

Summary of Headers and Abstracts

The following table identifies the database control number for each document posted on the ADI database system on December 12, 2008 and December 23, 2008; the applicable category; the subpart(s) of 40 CFR part 60, 61, or 63 (as applicable) covered by the document; and the title of the document, which provides a brief description of the subject matter.

We have also included an abstract of each document identified with its control number after the table. These abstracts are provided solely to alert the public to possible items of interest and are not intended as substitutes for the full text of the documents. This notice does not change the status of any document with respect to whether it is ''of nationwide scope or effect'' for purposes of section 307(b)(1) of the Clean Air Act. For example, this notice does not make an applicability determination for a particular source into a nationwide rule. Neither does it purport to make any document that was previously non-binding into a binding document.

ADI DETERMINATIONS UPLOADED ON DECEMBER 12, 2008

Control number	Category	Subpart	Title
A080001	NSPS	J	Alternative Monitoring Plan for Refinery Fuel Gas.
M080005	MACT	EEEEE	Force Majeure Events Delaying Initial Performance Testing for an Iron and Steel Foundry.
M080006	MACT	EEEEE	Disapproval of Alternative Stack Testing Request.
M080007	MACT	DDDDD	Request to Substitute Flue Gas Temperature Monitoring for Pressure Drop Monitoring.
M080008	MACT	YY	Control Requirement for Plant Exhaust from Primary Bag Filter Vents when Routed and not Routed to a Cogeneration Unit.
M080009	MACT	IIIII	Continuous Compliance Requirements for Mercury Recovery Units.
M080010	MACT	EEEEE	Storage and Transfer of Toluene Used as Fuel.
M080011	MACT	FFFF	Multiple Standard Batches to Define a Process within a Single MCPU.
M080012	MACT	GGG, FFFF.	MON Rule and Pharmaceuticals NESHAP for Glucosamine Hydrochloride.
M080013	MACT	FFFF	Manufacture of Poly Methyl Methacrylate (PMMA) Acrylic Sheet.
M080014	MACT	MMM, SS.	Initial Compliance Demonstration for Thermal Treatment Units.
M080016	MACT	GGG	Process Condensers and 20 ppmv Limit without Calculating Uncontrolled Emissions.
M080017	MACT	MMM, SS.	Use of Previously Conducted Performance Tests for Initial Compliance Demonstration.
M080018	MACT	N	Alternative Testing, Monitoring, and Work Practice Standards.
M080019	MACT	RRR	Request for Waiver of Performance Tests for Low-speed Aluminum Scrap Shredders.
M080020	MACT	UUUU	Request for Alternative Monitoring Plan Following Replacement of GC/PID Instrument.
Z080003	NESHAP	F	Alternative Monitoring Plan Modification.
800017	NSPS	Db	Alternative Monitoring Procedure for Opacity.
800018	NSPS	WWW	Alternative Monitoring Requests.
800019	NSPS	WWW	Alternative Monitoring Requests.
800020	NSPS	WWW	Alternative Monitoring Requests.
800021	NSPS	J, Ja	Gap in Continuous Program of Construction for Process Heater.
800022	NSPS	WWW	Request for Higher Operating Temperature at Landfill Wellhead.
800023	NSPS	WWW	Request for Higher Operating Temperature at Landfill Wellhead.
800024	NSPS	WWW	Alternative Compliance Timeline for Landfill.
800025	NSPS	CC	Bridgewall Optical Temperature (BWOT) Alternative Monitoring Proposal.
800026	NSPS	WWW	Alternative Compliance Timeline for Landfill Well.
800027	NSPS	Db, Dc	Indirect-Fired Dryers used in the Ethanol Industry.
800028	NSPS	UUU	Synthetic Alumina Applicability Determination.
800029	NSPS	D	Continuous Particulate Emission Monitoring System.
800030	NSPS	D	Continuous Particulate Emission Monitoring System.
800031	NSPS	KKKK	Reconstruction of a Stationary Combustion Turbine.
800032	NSPS	VV, VVa	Alternative Monitoring Procedure for Leak Detection.
800033	NSPS	J	Revised Alternative Monitoring Plan Conditions for Hydrogen Sulfide.

ADI DETERMINATIONS UPLOADED ON DECEMBER 12, 2008—Continued

Control number	Category	Subpart	Title
800034	NSPS	Dc	Boiler Derate Proposal.
800035	NSPS	WWW	Alternative Compliance Timeline for Landfill Well.
800036	NSPS	KKK	Applicability to Expansion Project at Propane Refrigeration Plant.
800037	NSPS	UUU	Alternative Monitoring for Calciner.
800038	NSPS	WWW	Alternative Compliance Timeline for Leachate Recirculation Line.
800039	NSPS	WWW	Alternative Timeline to Correct Positive Pressure at Landfill Wells.
800040	NSPS	WWW	Alternative Standards/Procedures for Oxygen/Pressure.
800041	NSPS	Kb	Process Tanks Defined.
800042	NSPS	Kb	Request for Reconsideration of Gasoline Storage Vessel Decision.
800043	NSPS	GG, KKKK.	Original owner/operator of Gas Turbine.
800044	NSPS	Da	Modification to Increase Feed Rate with Bottleneck.
800045	NSPS	Da	Modification to Increase Feed Rate with Bottleneck.
M080021	MACT	RRR	Applicability to Aluminum Shredder/Baler.
M080022	MACT	NNNNN	Alternative Monitoring for Water Scrubber/Mist Eliminator.
M080023	MACT	RRR	Thermal Chip Dryer Operation Prior to Performance Testing.
M080024	MACT	KKKK	Applicability determination for Metal Can Surface Coating NESHAP.
M080025	MACT	G	Alternative Monitoring Parameters for HON Carbon Adsorber System.
M080026	MACT	G	Alternative Monitoring Parameters for HON Carbon Adsorber System.
M080027	MACT	RRR	Dioxin/Furan Stack Test Waiver Request.
M080028	MACT	RRR	Dioxin/Furan State Test Waiver Request, OM & M Plan Deficiencies, and Lime Injection.
M080029	MACT	CC, R	Alternate Monitoring Parameter for Assist Gas in Flare.
M080031	MACT	DDDDD	Definition of Process Heater.
M080034	MACT	FFFFF	Stack Test Waiver Request.
M080035	MACT	JJJJ	Compliance Demonstration for Paper and Other Web Coating.
Z080004	NESHAP	E	Applicability for Sludge Dryer.
800046	NSPS	DD	Applicability and Alternative Control Conditions for Malting Facility.
800047	NSPS	WWW	Treated Landfill Gas Exemption.
800048	NSPS	J	Alternative Monitoring Plan at Petroleum Refinery.
800049	NSPS	J	Alternative Monitoring for Petroleum Refinery Vapor Combustion Unit.
800050	NSPS	J	Alternative Monitoring for Petroleum Refinery Vapor Combustion Unit.
800051	NESHAP	E	Waiver of Mercury Emissions Testing for Refinery.
800052	NSPS	UUU	Alternative Monitoring for Wet Scrubber.
800053	NSPS	WWW	Alternative Timeline to Correct Exceedances at Landfill Well.
800054	NSPS	WWW	Alternative Timeline to Correct Exceedances at Landfill Well.
800055	NSPS	J	Alternative Monitoring for Vapors from Disulfide Separator Venting.
800056	NSPS	OOO	Preparatory Processes for Gypsum Stucco Production.
800057	NSPS	WWW	Alternative Timeline to Correct Exceedances at Landfill Well.
800058	NSPS	WWW	Alternative Timeline to Correct Exceedances at Landfill Well.
800059	NSPS	WWW	Alternative Timeline to Correct Exceedances at Landfill Well.
800060	NSPS	WWW	Alternative Timeline to Correct Exceedances at Landfill Wells.
800061	NSPS	WWW	Alternative Timeline to Correct Exceedances at Landfill Well.
800062	NSPS	WWW	Alternative Temperature at Recycling and Disposal Facility.
800063	NSPS	WWW	Alternative Temperature at Recycling and Disposal Facility.
800064	NSPS	WWW	Alternative Timeline to Correct Exceedances at Landfill Well.
800065	NSPS	WWW	Alternative Monitoring Procedures at a Landfill.
800066	NSPS	WWW	Alternative Timeline to Correct Exceedance at Landfill Well.
800067	NSPS	WWW	Alternative Timeline to Correct Exceedance at Landfill Well.
800068	NSPS	WWW	Alternative Monitoring, Testing, and Other Requirements for a Landfill.
800069	NSPS	WWW	Treated Landfill Gas Exemption.
800070	NSPS	WWW	Alternative Timeline to Correct Exceedance at Landfill Well.
800071	NSPS	GG	Revision of Custom Fuel Monitoring Schedule.
800072	NSPS	WWW	Emissions Rate Reporting Requirements at Landfill.
800073	NSPS	BB	Applicability Determination for Kraft Pulp Mill TRS Emissions.
800074	NSPS	OOO	Performance Testing Requirement Condition D.4.6.
800075	NSPS	AAa	Installation of a Capacitor/Reactor at an Electric Arc Furnace.
800076	NSPS	J	Alternative Monitoring for Opacity Due to Wet Gas Scrubber.
800077	NSPS	WWW	Alternative Timeline to Correct Exceedance at a Landfill Well.
800078	NSPS	WWW	Alternative Timeline to Correct Exceedance at a Landfill Well.
800079	NSPS	AAAA, WWW.	Landfill Gas Treatment Exemption.
800080	NSPS	J	Alternative Monitoring for Thermal Vapor Incinerator.
800081	NSPS	J	Alternative Monitoring Plan for Propane Vapor from a Vent Gas Absorber.
800082	NSPS	J	Alternative Monitoring Request for FCCU COMS at a Refinery.
800083	NSPS	DD	Applicability for Co-Located Grain Elevators.
800084	NSPS	OOO	Alternative Testing Method Request for Wallboard Shredder.
800085	NSPS	WWW	Alternative Timeline to Correct Exceedance at a Landfill Well.
800086	NSPS	WWW	Change to Standard Operating Procedure at a Landfill.
800087	NSPS	H	Applicability for Sulfuric Acid Plants with Hydrogen Sulfide Burning Processes.
M080037	MACT	RRR	Compliance with ACGIH Ventilation Manual.
M080036	MACT	RRR	Clean Charge Defined.
0800088	NSPS	J	Applicability to a Refinery Flare.

ADI DETERMINATIONS UPLOADED ON DECEMBER 12, 2008—Continued

Control number	Category	Subpart	Title
ADI Determinations Uploaded on December 23, 2008			
0800089	NSPS	Db	Dryers at OSB Bark Burner System.
0800090	NSPS	J, Ja	Integrated Gasification Combined Cycle Power Plant.
Z080005	NESHAP	CC	Integrated Gasification Combined Cycle Power Plant.

Abstracts

Abstract for [A080001]

Q: Does EPA allow ConocoPhillips' Wood River Refinery in Roxana, Illinois, to monitor the liquid benzene at the finished product tanks under 40 CFR part 60, subpart J, in lieu of continuously monitoring the sulfur dioxide concentration of the displaced barge vapors from benzene loading? These displaced barge vapors are directed to the Marine Vapor Control system thermal oxidizer.

A: Yes. EPA finds that the proposed alternative monitoring proposal from ConocoPhillips meets the requirements of EPA's guidance entitled ''Alternative Monitoring Plan for NSPS subpart J Refinery Fuel Gas.'' The displaced benzene vapors from the benzene loading are inherently low in sulfur content.

Abstract for [M080005]

Q: Does EPA consider, as force majeure, certain furnace malfunctions and labor strikes that prevented stack tests from being conducted before the compliance deadline under 40 CFR part 63, subpart EEEEE, at the Indianapolis Casting facility in Indianapolis, Indiana?

A: Yes. EPA finds that the certain events, such as furnace malfunctions and labor strikes, as described in EPA's response to Indianapolis Casting, can be considered as force majeure under MACT subpart A. The furnace malfunctions were safety related and required extended furnace shut downs for repair, and labor actions are beyond the control of the company.

Abstract for [M080006]

Q: Does EPA accept stack test results performed before the compliance deadline of 40 CFR part 63, subpart EEEEE, as the required initial compliance demonstration at the Indianapolis Casting facility in Indianapolis, Indiana?

A: Yes. EPA accepts stack test results before the compliance deadline under MACT subpart EEEEE as the initial compliance demonstration only if the production rates achieved during the April 2005 tests are representative of the highest production rates currently achievable, and the gas sample volume collected meets or exceeds 60 dry standard cubic feet for each sampling run as specifically required under 40 CFR 63.7732(b)(2).

Abstract for [M080007]

Q: Does EPA allow S.D. Warren to monitor the flue gas temperature of the wet scrubber outlet in lieu of monitoring the pressure drop across the wet scrubber under 40 CFR part 63, subpart DDDDD? The S.D. Warren Company/SAPPI Fine Paper of North America's Skowhegan, Maine, pulp mill has a large multi-fuel boiler with an associated wet scrubber that does not experience a significant pressure drop because it is an open vessel.

A: Yes. EPA finds this acceptable under MACT subpart DDDDD. A temperature drop in the range of 250 degrees Fahrenheit at the scrubber outlet will indicate that the flue gases are coming into contact with the scrubber water in order to control particulate matter emissions. A continuous monitoring system that can be used to determine and record the flue gas temperature of the boiler wet scrubber outlet at least once every successive 15-minute period should be installed, calibrated, maintained, and operated.

Abstract for [M080008]

Q: What are the applicability and control requirements under 40 CFR part 63, subpart YY, for the plant exhaust from the primary bag filter vents for Units 1, 2, and 3 at the Sid Richardson Big Springs facility in Howard County, Texas, which are primarily routed to a cogeneration unit but also can be routed away from the facility's cogeneration unit to a flare?

A: The facility would be subject to different requirements under MACT subpart YY depending upon the use of the exhaust gas. When the facility routes the exhaust gas to the cogeneration unit, no control requirements would apply. During the times the facility bypasses the cogeneration system to the flare, the plant exhaust from the primary bag filter vents for Units 1, 2, and 3 must meet the requirements under MACT subpart YY for process vents, unless there is a startup, shutdown, or malfunction (SSM). When the plant exhaust from the primary bag filter vents for Units 1, 2, and 3 bypasses the cogeneration unit during SSM, the facility must follow its SSM plan.

Abstract for [M080009]

Q: Does 40 CFR part 63, subpart IIIII require a daily average or an hourly average to determine continuous compliance with the emissions standard for mercury recovery units under Section 63.8190(a)(3)?

A: When determining continuous compliance with the emissions standard for mercury recovery units under 40 CFR 63.8190(a)(3), a facility should calculate a daily average mercury concentration, using Equation 2 at 40 CFR 63.8240(a).

Abstract for [M080010]

Q: Does the exemption from the definition of ''organic liquid'' for gasoline (including aviation gasoline), kerosene (No. 1 distillate oil), diesel (No. 2 distillate oil), asphalt, and heavier distillate oils and fuel oils in 40 CFR 63.2406 of the Organic Liquid Distribution National Emissions Standard for Hazardous Air Pollutants (NESHAP), 40 CFR part 63, subpart EEEE (OLD MACT) include the use of toluene as a fuel in the inorganic chemical process that manufactures titanium dioxide (TiO_2) at the DuPont Company (DuPont) of Wilmington, Delaware?

A: No. EPA concludes that the OLD MACT applies to the storage and transfer of toluene used as fuel in the production of TiO_2. The exemption in 40 CFR 63.2406(3)(i) in the definition of ''organic liquid'' applies only to those expressly listed liquids. Because toluene is an organic liquid and is not gasoline, kerosene, diesel, asphalt, or a heavier distillate oil or fuel oil, it is not eligible for the exemption under 40 CFR 63.2406(3)(i) merely because it may be used as a fuel.

Abstract for [M080011]

Q: Does EPA allow a facility to use multiple standard batches to define a process within a single miscellaneous chemical manufacturing process unit (MCPU) under 40 CFR part 63, subpart

FFFF, National Emission Standards for Hazardous Air Pollutants: Miscellaneous Organic Chemical Manufacturing (the MON rule)?

A: EPA finds that a facility may request that EPA exercise its authority under 40 CFR 63.10(f) to modify the recordkeeping and reporting requirements in the MON rule and allow multiple standard batches per process. Facilities can request approvals of alternative recordkeeping and reporting in their precompliance reports. [*See* 40 CFR 63.2520(c)]. Alternatively, requests submitted after the due date of the precompliance report (i.e., after November 13, 2007) may be submitted under 40 CFR 63.10(f).

Abstract for [M080012]

Q1: Which Standard Industrial Classification (SIC) code applies to the glucosamine hydrochloride production process at Cargill Incorporated in Eddyville, Iowa?

A1: The appropriate SIC code for the glucosamine hydrochloride production process is 289, Miscellaneous Chemical Products.

Q2: Is the process subject to 40 CFR part 63, subpart FFFF, the National Emission Standards for Hazardous Air Pollutants: Miscellaneous Organic Chemical Manufacturing (MON) Rule?

A2: Yes. The glucosamine hydrochloride production process is subject to the MON Rule.

Q3: If this process is not subject to the MON Rule, is it subject to the Pharmaceuticals NESHAP or another NESHAP?

A3: No, the facility is not subject to the Pharmaceuticals NESHAP or another NESHAP.

Abstract for [M080013]

Q. Is the process by which the Spartech Polycast facility in Stamford, Connecticut, manufactures poly methyl methacrylate (PMMA) acrylic sheet subject to 40 CFR part 63, subpart FFFF?

A. Yes. Spartech's operations produce a material (PMMA) classified using Standard Industrial Classification (SIC) code 282 or The North American Industry Classification System (NAICS) NAICS code 325, and its operations meet all the other criteria for MACT subpart FFFF to apply.

Abstract for [M080014]

Q: Does EPA approve the use at Dow Chemical's Midland, Michigan, facility of the results of performance tests conducted on three thermal treatment units under 40 CFR part 63, subparts GGG and MMM, in lieu of conducting an initial compliance demonstration for 40 CFR part 63, subpart FFFF (the MON)?

A: Yes. EPA approves the use of these previously conducted performance tests as the initial compliance demonstration for the MON, based in part on Dow Chemical's use of test methods referenced in MACT subpart FFFF and its declaration that no significant process changes have occurred since these tests.

Abstract for [M080016]

Q1: Does EPA approve Dow AgroSciences' (DAS) request to monitor the liquid temperature of its condensers at its Harbor Beach, Michigan, facility as an alternative to measuring the exhaust gas temperature when demonstrating initial compliance with 40 CFR part 63, subpart GGG (the Pharma-MACT)?

A1: No. In regards to the initial compliance demonstration for process condensers under MACT subpart GGG, EPA will not approve DAS's request to monitor the liquid temperature as an alternative to monitoring the exhaust gas temperature because DAS started operating its condensers before the compliance date, and it did not present sufficient technical justification for the alternative method.

Q2: Does EPA approve DAS's request to comply with the 20 ppmv outlet concentration limit under § 63.1254(a)(1)(ii)(A) without calculating uncontrolled hazardous air pollutant emissions from all emission episodes using the equations specified in § 63.1257(d)(2)(i), or developing an engineering assessment as allowed in Section 63.1257(d)(2)(ii), or developing an emission profile as required by § 63.1257(b)(8)(ii)?

A2: No. In regards to complying with the 20 ppmv outlet concentration limit under 40 CFR 63.1254(a)(1)(ii)(A), EPA will not approve DAS's request to forgo calculating uncontrolled emissions, developing an engineering assessment, or developing an emission profile because the alternative standard, at § 63.1254(c), is the only process-vent compliance option for the Pharma-MACT that does not require calculation of uncontrolled emissions because it requires continuous monitoring through a continuous emission monitoring system (CEMS). As DAS does not employ a CEMS, the only way it can ensure compliance with 40 CFR 63.1254(a)(1)(ii)(A) is if it calculates uncontrolled emissions and develops an emission profile under worst-case conditions.

Abstract for [M080017]

Q: Does EPA approve at Dow Chemical Company's Midland, Michigan, facility, the use of the results of performance tests conducted on three thermal treatment units per 40 CFR part 63, subparts GGG and MMM, in lieu of conducting an initial compliance demonstration for 40 CFR part 63, subpart FFFF (the MON)?

A: Yes. EPA approves the use of these previously conducted performance tests as the initial compliance demonstration for the MON, based on Dow's use of test methods referenced in 40 CFR part 63, subpart FFFF and statement that no significant process changes have occurred since these tests.

Abstract for [M080018]

Q: Does EPA approve alternative test methods, monitoring, and work practice standards under 40 CFR part 63, subpart N, for Finishing Innovation's proposed new hard chrome electroplating tank in Warsaw, Indiana? The proposed new tank will be equipped with an Emission Elimination Device (EED), or formerly known as the Merlin Cover, which is a patented system which totally encloses the chrome tank while plating takes place.

A: Yes. EPA approves the proposed alternative test method, monitoring procedures and work practices consistent with previous approvals. EPA's Office of Air Quality Planning and Standards (OAQPS) approved an alternative test method utilizing a smoke generation device. This device would be ignited and placed inside the EED and the absence of leaking smoke confirmed to demonstrate that the EED completely encloses the atmosphere over the chrome electroplating tank. EPA Region 5 has also approved alternative monitoring requirements and work practices to monitor continuous compliance of the EED and to ensure that it maintains compliance.

Abstract for [M080019]

Q: Does J.L. French Corporation's variance request letter contain adequate information for the EPA to approve a request for waiver of initial performance tests as well as all subsequent performance tests for the existing aluminum scrap shredders located at J.L. French Corporation's Gateway and Taylor secondary aluminum production facilities in Sheboygan, Wisconsin?

A: No. EPA finds that based on the information submitted to the EPA, we cannot approve J.L. French Corporation's request for waiver of initial performance tests, as well as all subsequent performance tests for the existing aluminum scrap shredders. For the EPA to make an informed decision either approving or denying such a request, J.L. French Corporation's

application for waiver of performance tests must be accompanied by a comprehensive compliance status report proving compliance with the relevant aluminum scrap shredder standards at 40 CFR part 63, subpart RRR. In addition, 40 CFR 63.7(h)(3)(iii) provides that any application for a waiver of a performance test shall include information justifying the owner or operator's request for a waiver, such as the technical or economic infeasibility, or the impracticality, of the affected source performing the required test.

Abstract for [M080020]

Q: Does EPA approve a change to Viscofan's (formerly Teepak) alternative monitoring plan under 40 CFR part 63, subpart UUUU, originally approved in February 2005 at its facility in Danville, Illinois? Viscofan would like to replace one of its GC/PID instruments with a new Baseline-MOCON, Incorporated Model 8900 GC/PID to measure hydrogen sulfide and carbon disulfide.

A: Conditional. EPA has determined that it is acceptable under MACT subpart UUUU for Viscofan to perform a carrier gas (zero) and a single upscale gas Quality Control (QC) check on a daily basis for each chemical monitored.

However, Viscofan must still do a full linearity-type calibration (zero and at least three upscale gas concentrations) initially and at least quarterly thereafter for each chemical monitored.

Abstract for [Z080003]

Q: Does EPA allow modification in the existing vinyl chloride alternative monitoring plan under 40 CFR part 61, subpart F, for Lubrizol Advanced Material's polyvinyl chloride plant in Louisville, Kentucky?

A: Yes. Based upon a statistical analysis presented by Lubrizol, EPA finds that there are only minor differences between individual and composite resin samples that the company analyzes on a monthly basis under NESHAP subpart F. Therefore, EPA waives the requirement to compare the results of individual and composite samples on a monthly basis.

Abstract for [0800017]

Q: Does EPA approve an alternative opacity monitoring procedure, which consists of monitoring the secondary power input to the electrostatic precipitator (ESP), for a boiler at the U.S. Sugar facility in Clewiston, Florida, which is subject to 40 CFR part 60, subpart Db?

A: No. Because NSPS subpart Db was modified to allow the use of a particulate matter continuous emission monitoring system (PM CEMS) as an alternative to the use of a continuous opacity monitoring system (COMS), EPA finds that there is no justification for now allowing the use of parametric monitoring of the ESP. Therefore, unless U.S. Sugar can demonstrate that a PM CEMS is not a viable alternative to a COMS, EPA does not approve the request to use parametric monitoring, which is a less accurate and reliable alternative.

Abstract for [0800018]

Q: Does EPA approve changes to monitoring and operational requirements for the landfill operated by Environtech in Morris, Illinois, under 40 CFR part 60, subpart WWW?

A: Conditional. EPA finds that it needs to approve alternatives to monitoring and operational requirements that are part of the design plan, and EPA's Office of Air Quality Planning and Standards (OAQPS)needs to approve such alternative test methods. However, the Illinois Environmental Protection Agency (IEPA) has the authority to approve non-monitoring, non-operational changes to the design plan. EPA refers to several previous determinations on the Applicability Determination Index (ADI) with ADI Control Numbers 03000120, 0400033, 0600062, 0600063, and M040028, and the modifications of September 21, 2006, to 40 CFR part 60 (71 FR 55127) in addressing many specific requests.

Abstract for [0800019]

Q: Does EPA approve changes to monitoring and operational requirements for the landfill operated by LandComp in Ottawa, Illinois, under 40 CFR part 60, subpart WWW?

A: Conditional. EPA finds that it needs to approve alternatives to monitoring and operational requirements that are part of the design plan, and EPA's Office of Air Quality Planning and Standards (OAQPS) specifically within EPA needs to approve alternative test methods. However, the Illinois Environmental Protection Agency (''IEPA'') has the authority to approve non-monitoring, non-operational changes to the design plan. EPA refers to a several previous applicability determinations on the Applicability Determination Index (ADI) with ADI Control Numbers 03000120, 0400033, 0600062, 0600063, and M040028, and the modifications of September 21, 2006, to part 60 (71 Federal Register 55127) in addressing many specific requests.

Abstract for [0800020]

Q: Does EPA approve changes to monitoring and operational requirements for the landfill operated by Lee County in Dixon, Illinois, under 40 CFR part 60, subpart WWW?

A: Conditional. EPA finds that it needs to approve alternatives to monitoring and operational requirements that are part of the design plan, and EPA's Office of Air Quality Planning and Standards (OAQPS) needs to approve alternative test methods. However, IEPA has the authority to approve non-monitoring, non-operational changes to the design plan. EPA refers to several previous applicability determinations on the Applicability Determination Index (ADI) with ADI Control Numbers 03000120, 0400033, 0600062, 0600063, and M040028, and the modifications of September 21, 2006, to part 60 (71 FR 55127) in addressing many specific requests.

Abstract for [0800021]

Q: Does EPA allow the gas-fired process heater (new 77F–1) installed at the Marathon Ashland Petroleum refinery (Marathon) in Robinson, Illinois, to be exempt from 40 CFR part 60, subpart Ja, given that the heater was purchased in 2001 but never installed?

A: No. Given the six-year gap since the purchase of the heater and its incomplete fabrication, and given further that Marathon has not started the bidding process to ship and install the process heater, EPA finds that Marathon has not undertaken a continuous program of construction and has not ''commenced construction'' of an ''affected facility'' on or prior to May 14, 2007. Thus, when the heater is constructed at the refinery and upon the effective date of NSPS subpart Ja, the heater will be subject to NSPS subpart Ja.

Abstract for [0800022 & 0800023]

Q: Does EPA allow the Milam Recycling and Disposal facility (Milam) in East Street Louis, Illinois, to obtain a higher operating temperature for landfill gas extraction wells MW 39 and MW58 under 40 CFR part 60, subpart WWW?

A: Yes. The NSPS requires that each interior wellhead in the collection system operate with a landfill gas temperature less than 131 degrees Fahrenheit. The facility may request a higher operating temperature under NSPS subpart WWW if supporting data demonstrate that the elevated temperature does not cause fires or inhibit anaerobic decomposition by killing methanogens. As Milam has

submitted such data, EPA approves a higher operating temperature of 140 degrees Fahrenheit for well MW39 and MW58.

Abstract for [0800024]

Q: Does EPA approve an alternative timeline, under 40 CFR part 60, subpart WWW, to correct oxygen exceedances at leachate cleanout riser LCO–02A at the Veolia Orchard Hills Landfill in Davis Junction, Illinois?

A: Yes. EPA approves the alternative timeline under NSPS subpart WWW. Veolia Orchard Hills Landfill may have until 45 days of the initial exceedance to correct the oxygen exceedances.

Abstract for [0800025]

Q: Does EPA allow the Owens-Brockway Glass Container facility in Lapel, Indiana, to measure the bridgewall optical temperature (BWOT), under 40 CFR part 60, subpart CC, three times per shift instead of installing and operating a continuous opacity monitor on its Furnace Number 32?

A: No. NSPS subpart CC requires that continuous parameter monitoring systems complete a minimum cycle of operation (sampling, analyzing and data recording) every 15 minutes. EPA determines that if the BWOT cannot be measured continuously, then it is not an appropriate alternative monitoring parameter to opacity, and the facility should install a COM.

Abstract for [0800026]

Q: Does EPA approve an alternative timeline under 40 CFR part 60, subpart WWW, to correct oxygen exceedances at Veolia's Valley View Landfill in Decatur, Illinois?

A: Yes. EPA approves an extension of up to 53 days from the date of the initial exceedance to bring wells 19R and 26R into compliance with the oxygen concentration standard under NSPS subpart WWW.

Abstract for [0800027]

Q1: Does EPA consider indirect-fired dryers used in the ethanol industry subject to 40 CFR part 60, subparts Db or Dc?

A1: EPA finds that both NSPS subparts Db and Dc apply to indirect-fired dryers as they use the process of drying in a closed steam loop system with an integrated thermal oxidizer to transfer heat across a physical barrier. In the indirect heating method being used, they meet the definition of a steam generating unit under 40 CFR 60.41b and 60.41c.

Abstract for [0800028]

Q1: Does EPA considered any of the material used as a feedstock on the Spherical Catalyst Manufacturing (SCM) Line 1 at UOP's Shreveport, Louisiana, plant, a ''mineral'' as term is used in the definition of ''mineral processing plant,'' under NSPS subpart UUU?

A1: No. EPA finds that none of the feed materials used on SCM Line 1 (pure aluminum, hydrochloric acid, and/or aluminum hydroxychloride solution) is a ''mineral,'' as the term is used in the definition of ''mineral processing plant,'' under at 40 CFR 60.731.

Q2: Does synthetic alumina produced on the Spherical Catalyst Manufacturing (SCM) Line 1 at UOP's Shreveport, Louisiana, plant, using a combination of pure aluminum, hydrochloric acid, and/or aluminum hydroxychloride solution, meet the definition of a ''mineral,'' as the term is used in NSPS CFR subpart UUU in the definition of the affected facility: each calciner and dryer at a ''mineral processing plant,'' located in NSPS subpart UUU at 40 CFR 60.730?

A2: No. EPA finds that the synthetic alumina produced on SCM Line 1 does not meet the definition of ''mineral.''

Q3: Is SCM Line 1, located at UOP's Shreveport, Louisiana, plant, processing a ''mineral,'' as the term is used in 40 CFR part 60, subpart UUU, or producing a ''mineral,'' as the term is used in the definition of the affected facility (each calciner and dryer at a ''mineral processing plant'') in subpart UUU, potentially subject to NSPS part 60, subpart UUU?

A3: No. EPA finds that SCM Line 1 cannot be subject to subpart UUU, because it neither processes a ''mineral,'' nor does it produce a ''mineral,'' and, therefore, it does not meet the NSPS subpart UUU definition of a ''mineral processing plant''

Abstract for [0800029]

Q: Does EPA allow Louisville Gas and Electric (LG&E) to substitute particulate matter continuous emission monitoring systems (PM CEMS) for continuous opacity monitoring systems (COMS) under 40 CFR part 60, subpart D, on Units 3 and 4 at its Mill Creek Station in Louisville, Kentucky?

A: Yes. Because EPA believes that PM CEMS will be superior to COMS for verifying compliance with the applicable particulate emission limit for Units 3 and 4, LG&E's alternative monitoring proposal under NSPS subpart D is approved, provided that a number of conditions outlined in the approval are met.

Abstract for [0800030]

Q: Does EPA allow the Kentucky Utilities Company (KU) to substitute particulate matter continuous emission monitoring systems (PM CEMS) for continuous opacity monitoring systems (COMS) under 40 CFR part 60, subpart D, on Unit 3 at its Mill Ghent Station in Ghent, Kentucky?

A: Yes. Because EPA believes that PM CEMS will be superior to COMS for verifying compliance with the applicable particulate emission limit under NSPS subpart D for Unit 3, EPA approves KU's alternative monitoring request, provided that a number of conditions outlined in the EPA response are met.

Abstract for [0800031]

Q: Does the replacement of the gas turbine at the Bristol-Myers Squibb facility in New Brunswick, New Jersey, constitute reconstruction under 40 CFR part 60, subpart KKKK?

A: Conditional. For the purpose of NSPS subpart KKKK, EPA finds that the affected facility is not limited to the turbine itself. It is not clear from the submittal what the fixed capital cost of the new components is as compared to a similar entirely new facility. Costs outside of the affected facility, such as the building, air pollution control, testing, and monitoring equipment, site preparation, removal of the old turbine, and contingency costs should not be included.

Abstract for [0800032]

Q: Does EPA approve the use of sensory means (i.e., visual, audible, or olfactory), as an alternative, under 40 CFR part 60, subparts VV and VVa, to using EPA Method 21 for the identification of leaks from equipment in acetic acid service at the Eastman Chemical Company facility in Columbia, South Carolina?

A: Yes. EPA finds that the proposed alternative is acceptable under NSPS subparts VV and VVa. Monitoring results provided by Eastman indicate that leaks from equipment in acetic acid service are more easily identified through sensory methods than by using Method 21 because of the physical properties (high boiling point, high corrosivity, and low odor threshold) of acetic acid and the process conditions at the plant.

Abstract for [0800033]

Q: May Air Products and Chemicals, Inc. (Air Products) use the process monitor as the primary method to measure hydrogen sulfide (H_2S) for two furnaces located within the ExxonMobil Joliet, Illinois, refinery, and eliminate the previously stipulated alternative monitoring plan (AMP) conditions that require random H_2S grab sampling, under the New Source Performance

Standards for Petroleum Refineries, 40 CFR part 60, subpart J.

A: No. EPA finds that the conditions of the AMP cannot be revised, because monitoring a process parameter is not a substitute for H_2S grab sampling. Please refer to a previous EPA approved AMP available on the Applicability Determination Index (AD)) under ADI Control Number 0100037.

Abstract for [0800034]

Q: Does EPA approve a boiler derate proposal , under 40 CFR part 60, subpart Dc, based on changes made to the natural gas-fired boiler at the facility located in Dearborn, Michigan?

A: Yes. EPA approves this proposal under NSPS subpart Dc, as it will reduce the capacity of the boiler and will comply with EPA's policy on derates.

Abstract for [0800035]

Q: Does EPA approve an alternative compliance timeline under 40 CFR part 60, subpart WWW, to correct a pressure exceedance at the Livingston Landfill, Well GW10, located in Pontiac, Illinois?

A: No. On November 20, 2007, the GW10 well at Livingston Landfill showed a positive pressure reading. On December 3, 2007, Livingston requested an extension to bring the well into compliance. However, according to a phone conversation between EPA and Cornerstone Environmental Group on January 4, 2008, the well had achieved compliance within 15 days of the initial exceedance. Therefore, EPA determines that an alternative compliance timeline was not required.

Abstract for [0800036]

Q: Does EPA concur with Michigan Consolidated Gas Company (MichCon), a solely owned subsidiary of DTE Energy LLC, that 40 CFR part 60, subpart KKK, does not apply to the recent expansion project of a propane refrigeration plant at MichCon's Belle River Mills facility?

A: No. EPA determines that NSPS subpart KKK is applicable to the recent expansion project because the propane refrigeration system uses a process that extracts ''natural gas liquids.'' Thus, the facility meets the definition of a natural gas processing plant set forth in 40 CFR 60.631.

Abstract for [0800037]

Q: Does EPA approve an alternative monitoring plan, under 40 CFR part 60, subpart UUU, to monitor the nozzle pressure of a Venturi scrubber instead of the pressure loss of the gas stream through the Venturi scrubber at 3M's Cottage Grove, Minnesota, facility?

A: Yes. EPA finds that the 3M Company has demonstrated that the nozzle pressure is a reasonable alternative under NSPS subpart UUU to the pressure loss of the gas stream through the Venturi scrubber.

Abstract for [0800038]

Q: Does EPA approve an alternative timeline under 40 CFR part 60, subpart WWW, to correct oxygen exceedances at Veolia Orchard Hills Landfill's Leachate Recirculation Line LRW–12, located in Davis Junction, Illinois?

A. Yes. On February 14, 19, and 26, 2008, Veolia's leachate recirculation line, LRW–12, exceeded the 5 percent oxygen concentration standard. EPA approved an alternate timeline under NSPS subpart WWW for Veolia to correct the oxygen exceedances until May 14, 2008. EPA finds that if the oxygen standard cannot be met by May 14, 2008, the landfill will need to apply to have the well decommissioned. If Illinois EPA does not approve such decommissioning, and Veolia cannot achieve an oxygen concentration below 5 percent by May 14, 2008, then Veolia must have the gas collection system expanded by 120 days of the initial exceedance.

Abstract for [0800039]

Q: Does EPA approve an alternative timeline under 40 CFR part 60, subpart WWW, for Roxana Landfill, in Roxana, Illinois, to correct positive pressure at the wells number 6, 7, 8, 18, 20, 22, 23, 24, 38, 39, 40, 41, 42, 43, 44, 45, and 46 wells?

A: Yes. EPA approves Roxana's proposed alternative timeline under NSPS subpart WWW. However, if Roxana cannot measure and achieve negative pressure without excess air infiltration at the wells number 6, 7, 8, 18, 20, 22, 23, 24, 38, 39, 40, 41, 42, 43, 44, 45, and 46 by the alternative compliance date, Roxana must expand the gas collection system within 120 days of the initial exceedances.

Abstract for [0800040]

Q: Does EPA approve alternative operational standards and procedures under 40 CFR part 60, subpart WWW, for oxygen/pressure for six low gas producing wells at Veolia Environmental Services' Zion Landfill in Zion, Illinois?

A: Yes. EPA approves adjusted standards and procedures under NSPS subpart WWW for oxygen and pressure for low gas producing extraction points where gas flows are so low that applying even minimal vacuum results in exceedances of the applicable oxygen concentration limit and the persistent oxygen/pressure exceedances are not due to operational or maintenance issues. Instead of decommissioning or permanently disconnecting such extraction locations, which would result in no gas control, it is better to keep operating them and allow the locations to remain shut off, under positive pressure, with monthly monitoring and periodic adjustment to vacuum to remove accumulated landfill gas.

Abstract for [0800041]

Q1: Do the process and alcohol day tanks at Archer Daniels Midland's (ADM) dry mill ethanol production facility at its existing corn wet mill in Columbus, Nebraska, meet the process tank definition which exempts them from the control requirements of 40 CFR part 60, subpart Kb?

A1: Yes. EPA finds that these tanks are used within the process, are process tanks, and are not considered storage vessels subject to NSPS subpart Kb

Q2: Is the alcohol QC tank also a process tank and not a storage vessel under NSPS subpart Kb?

A2: No. EPA finds that this tank does not engage in the type of unit operations or other functions described for process tanks, and is outside of the process. The sampling performed at the tank does not qualify this tank as a process tank. It is subject to NSPS subpart Kb as a storage vessel.

Q3: Is the alcohol reclaim tank a process tank and not a storage vessel under NSPS subpart Kb?

A3: No. EPA finds that this tank serves as a feed vessel for reintroduction of material back into the process. It is not within the process, and is a storage vessel subject to NSPS subpart Kb.

Abstract for [0800042]

Q: Does EPA rescind two determinations posted to the Applicability Determination Index (ADI) with ADI Control Numbers 0400015 and 0500014 regarding modification of storage tanks due to storage of gasoline under 40 CFR part 60, concerning which the American Petroleum Institute (API) believes the sources are exempt?

A: No. EPA finds that the facilities at issue are not facilities owned or operated by API, and reconsideration of one of the determinations has already been requested by the source owner/operator and is being addressed by the Agency.

Abstract for [0800043]

Q: For Missouri River Energy Services' (MRES) facility in Audubon, Iowa, does EPA consider the manufacturer the original owner or operator of a stationary gas turbine

under 40 CFR part 60, subpart GG, and 40 CFR part 60, subpart KKKK?

A: Conditional. EPA finds that it depends on whether the entire affected facility was completely manufactured and fabricated by the manufacturer and purchased in completed form. In the analysis of this specific case, EPA determined that the turbine manufacturer was the original owner or operator. However, it is not true as a general matter that manufacturers of gas turbines are always the original owners or operators.

Abstract for [0800044]

Q1: Do physical changes to increase the coal feed rate to maintain generating capacity when switching coal type at NRG Energy's Indian River Generating Station in Millsboro, Delaware, constitute a modification of the boiler under 40 CFR part 60, subpart Da?

A1: Yes. EPA finds that physical changes to increase the coal feed rate would enable an increase in kg/hr emissions under NSPS subpart Da.

Q2: If the dedicated steam turbines physically limit the amount of steam that may be generated, does this prevent the boiler from being modified?

A2: No. EPA finds that applicability is determined based on the affected facility alone. Changes made to a downstream unit which is not part of the affected facility do not affect applicability of the boiler.

Abstract for [0800045]

Q: Does EPA consider the pressure limitations on boilers at the NRG Energy Indian River Generating Station in Millsboro, Delaware, as a limiting factor in the source's ability to increase emissions due to a proposed increase in feed rate under 40 CFR part 60, subpart Da?

A: EPA believes the proposed changes could enable an increase in kg/hr emissions under NSPS subpart Da.

Abstract for [M080021]

Q: Does EPA waive the applicability of 40 CFR 63.1511(e) for the aluminum shredder/baler at the Alcoa facility in Newburgh, Indiana, under MACT subpart RRR?

A: No. EPA does not waive the applicability of 40 CFR 63.1511(e), including all monitoring and testing requirements, to the aluminum shredder/baler. EPA does not believe the performance testing proposed by Alcoa provides sufficient evidence for the waiver because one test is insufficient.

Abstract for [M080022]

Q: Does EPA approve the alternative monitoring request for the Cognis facility in Kankakee, Illinois, under 40 CFR part 63, subpart NNNNN? The facility requests approval to remove scrubber effluent pH as one of the monitoring parameters for a water scrubber/mist eliminator.

A: Yes. EPA approves the alternative monitoring plan requested by Cognis under MACT subpart NNNNN. Cognis's water scrubber is a ''once through'' scrubber system, and the scrubber always has enough absorptive capacity for the CHI, regardless of the pH.

Abstract for [M080023]

Q: Does EPA approve the request from Allied Metal Company (Allied), located in Chicago, Illinois, to begin operation of a thermal chip dryer, under 40 CFR part 63, subpart RRR?

A: Conditional. EPA approves Allied's request under MACT subpart RRR, but only if Allied operates the thermal chip dryer and all associated emission control equipment for performance test preparation beginning in January 2007. All performance testing must be completed by March 1, 2007. If Allied cannot follow this schedule, Allied must cease operating the thermal chip dryer and notify EPA.

Abstract for [M080024]

Q: How does EPA find that the delisting of 2-butoxyethanol from the list of hazardous air pollutants (HAPs) affects the Hydrite Chemical Company (Hydrite) in Oshkosh, Wisconsin, under 40 CFR part 63, subpart KKKK? The facility had obtained permits to limit the potential-to-emit of HAPs to less than 25 tons of all combined HAPs and less than ten tons of any individual HAP.

A: EPA finds that if the permit limits for Hydrite were federally enforceable before the first major compliance date for existing sources, which is November 13, 2006, the facility would be considered a minor source for purposes of MACT subpart KKKK applicability. If the facility is subject to a MACT standard for which the first major compliance date has passed, the facility remains subject to that standard, regardless of any reduction in potential emissions which may result from no longer using the delisted HAP.

Abstract for [M080025]

Q: Does EPA approve the alternative monitoring procedures at the Flint Hills Resource's Joliet Facility (Joliet) in Joliet, Illinois, under 40 CFR part 63, subpart G? The facility has requested to reroute the emissions from a vent header system to a vent condenser followed by a carbon adsorber system for the maleic anhydride (MAN) process. Instead of regenerating the carbon adsorbers on site, FHR planned to send the spent canisters off site.

A: Yes. Joliet's June 20, 2006, request amended the original request dated October 3, 2005, stating that the carbon canister system would contain 4 parallel trains with two carbon canisters in series, in addition to other details sufficient for EPA's approval. (See ADI Control Number M080026.) Thus, per the amendments in the June 20, 2006, request, EPA approves the revised alternative monitoring plan pursuant to 40 CFR 63.151(f).

Abstract for [M080026]

Q: May Flint Hills Resource, LP, at its Joliet Facility in Joliet, Illinois, re-route the emissions from a vent header system to a vent condenser followed by a carbon adsorber system for the maleic anhydride (MAN) process and send the spent canisters off site, under 40 CFR part 63, subpart G?

A: No. EPA finds that this monitoring method is insufficient for demonstrating continuous compliance. Additionally, there is no proposed backup system for the ''channel'' analyzer in between the carbon canisters in each canister train. Finally, it is unclear exactly how many carbon canisters will be included in the proposed carbon adsorber system.

Abstract for [M080027]

Q: Does EPA waive the dioxin/furan (D/F) performance testing on Furnaces 2 and 6 of Jupiter Aluminum Corporation (Jupiter) in Hammond, Indiana, under 40 CFR part 63, subpart RRR? Jupiter has provided the baghouse inlet and outlet temperatures for both furnaces. The inlet and outlet temperatures for the baghouses on Furnaces 2 and 6 are below 130 degrees F, the D/F formation temperature.

A: Based on the information submitted, EPA waives Jupiter's requirement to test Furnace 2 for D/F. However, EPA believes for Furnace 6, a hole may have been in the ductwork during the testing on the old baghouse, and Jupiter has not repaired the hole. Therefore, at this time, EPA does not waive the requirement to test Furnace 6 for D/F. (See also ADI Control Number M080028.)

Abstract for [M080028]

Q1: Does EPA waive the dioxin/furan (D/F) performance testing on Furnaces 2 and 6 of Jupiter Aluminum Corporation (Jupiter) in Hammond, Indiana, under 40 CFR part 63, subpart RRR?

A1: No. EPA is clarifying that the D/F test waiver provided to Jupiter for

Furnace 2 by letter dated December 19, 2005, is rescinded. (See ADI Control Number M080027.) Until Jupiter conducts performance testing that demonstrates compliance with 40 CFR 63.1515(i), EPA considers Jupiter to be in continuous noncompliance which may result in civil penalties under the Clean Air Act. As previously stated in EPA's letter to Jupiter dated October 10, 2006, EPA views any previous testing Jupiter conducted on Furnaces 2 and 6 as unreliable and unacceptable.

Q2: Does EPA approve the current method Jupiter uses of weighing the final end product instead of weighing the scrap charged in each furnace under 40 CFR part 63, subpart RRR?

A2: No. EPA does not approve the current method of weighing the final end product. Jupiter must propose a weighing plan that records the weight of scrap charged in each furnace.

Q3: Does EPA approve the intermittent lime injection schedule used by Jupiter under 40 CFR part 63, subpart RRR?

A3: No. EPA is clarifying that since Jupiter has not demonstrated compliance with the emission limits in NESHAP subpart RRR through the required compliance testing, EPA has not approved the intermittent lime injection schedule used by Jupiter.

Abstract for [M080029]

Q: Does EPA approve the use of the presence of a pilot flame as an alternative monitoring parameter (AMP), even without the use of assist gas in the flare, at the Murphy Oil USA, Incorporated refinery located in Superior, Wisconsin, which operates a gasoline loading rack subject to 40 CFR part 63, subpart R and 40 CFR part 63, subpart CC?

A: No. EPA determines that the data presented by Murphy does not adequately assure continuous compliance sufficiently to allow for pilot presence to be used in lieu of control device temperature. The method that Murphy plans to use to demonstrate continuous compliance was not used during the performance test, and we are unable to determine if such AMP is appropriate. In a previous determination, EPA discussed a proposed alternative monitoring program for a thermal oxidizer system, including the importance of flame stability. (See ADI Control number M000002 dated 10/05/1998.)

Abstract for [M080030] Deleted Abstract

Abstract for [M080031]

Q: Nucor Sheet Mill Group of Crawfordsville, Indiana, operates annealing furnaces, each consisting of thirty (30) individual burners and U-tubes. Under 40 CFR part 63, subpart DDDDD, does EPA consider this as a whole a ''process heater,'' or does it consider each individual U-tube burner, each exhausting through an individual stack to the atmosphere, itself a ''process heater''?

A: EPA finds that the entire annealing furnace, with all 30 U-tubes and burners, is considered a single ''process heater'' with respect to this rule. EPA understands that each U-tube in a furnace cannot operate individually, because in order for the steel to be heated evenly, all three main zones must be used when operating.

Abstract for [M080034]

Q: Does EPA approve the waiver request from United States Steel in Granite City, Illinois, to test particulate emissions from two argon stir stations under 40 CFR part 63, subpart FFFFF?

A: Yes. EPA finds that the justification for a waiver provided by United States Steel under MACT subpart FFFFF adequately demonstrates the impracticability of testing the same baghouse again during operation of only the argon stir stations, and EPA determines that it is within United States Environmental Protection Agency guidance regarding the granting of such waivers.

Abstract for [M080035]

Q: Does EPA find that a performance test can be used to demonstrate compliance with the Paper and Other Web Coating MACT under 40 CFR part 63, subpart JJJJ, at the Rollprint Packaging Products, Inc. (Rollprint) facility in Addison, Illinois?

A: Yes. EPA finds that the testing demonstrates compliance with the requirements of 40 CFR 63.3320(1).

Abstract for [Z080004]

Q: Does EPA find that the Mercury NESHAP, under 40 CFR part 61, subpart E, applies to the sludge dryer within a wastewater pretreatment facility at the Chem-Plate Industries facility, located in Elk Grove Village, Illinois?

A: Yes. EPA finds that the Mercury NESHAP applies to all sludge treatment processes, regardless of process location. The provision does not provide for any special circumstances, such as the size of the waste treatment plant of likelihood of mercury in the effluent.

Abstract for [0800046]

Q: Anheuser-Busch, Incorporated receives barley by ship at its Manitowoc, Wisconsin, malting facility and unloads it by a self-unloading leg that dumps the barley into a hopper controlled by a flexible transition boot covering the end of the ship's self-unloading conveyor and the malt plant's grain receiving hopper. Does EPA consider this adequate control for particulate emissions under 40 CFR part 60 subpart DD?

A: No. EPA considers the entire self-unloading leg to be subject to the requirements of 40 CFR part 60 subpart DD. EPA finds that a flexible transition boot will adequately control particulate emissions from the end of the self-unloading leg and the grain receiving hopper at least as well as the requirements listed in 40 CFR 60.302(d)(1) and (d)(2). However, the flexible transition boot does not control emissions from the portion of the self-unloading leg that the boot does not cover.

Abstract for [0800047]

Q: Does EPA approve a gas treatment exemption for the Beecher Energy LLC (Beecher) facility located in Beecher, Illinois, under 40 CFR part 60, subpart WWW? Beecher uses landfill gas as a fuel to power internal combustion engines for electricity generators.

A: EPA finds that pursuant to 40 CFR 60.752(b)(2)(iii), collected landfill gas is required to be routed to a control system that complies with the requirements in either an open flare or a control system or enclosed combustor designed to reduce nonmethane organic compounds (NMOC), or a treatment system that processes the collected gas for subsequent sale or use. The landfill gas applicable to Beecher has been treated for sale or use. Once the landfill gas is treated, such facilities that buy or use the gas have no further associated obligations in regards to the NSPS subpart WWW.

Abstract for [0800048]

Q: British Petroleum Whiting Business Unit (BP) requests a review of an alternative monitoring plan (AMP) to the New Source Performance Standards for Petroleum Refineries at 40 CFR part 60, subpart J for its Beavon Stretford Tail Gas Treatment unit. May BP mathematically calculate the expected sulfur dioxide (SO_2) concentration using the existing TRS measurements and equation 15–2 in Method 15 rather than physically converting the total reduced sulfur (TRS) compounds and then measuring the SO_2 with a continuous emissions monitor (CEM) following Method 15A as specified in 40 CFR part 60, Appendix A?

A: Yes. EPA approves this change because this monitoring method is

consistent with the provisions of NSPS, subpart J. The SO_2 concentration calculated above must comply with the 250 parts per million limit established in 40 CFR 60.105(a)(7)(ii).

Abstract for [0800049]

Q: May British Petroleum Products North America, Incorporated (British), Whiting Business Unit in Whiting, Indiana, use fourteen hydrogen sulfide grab samples of loading rack emissions in lieu of installing a continuous emission monitoring system (CEM) as is required by 40 CFR part 60, subpart J (NSPS subpart J) for a vapor combustion unit (VCU)?

A: Yes. Based upon the information provided by British, EPA approves this alternative monitoring plan for the VCU pursuant to NSPS subpart J.

Abstract for [0800050]

Q: May British Petroleum Products North America, Incorporated (British), Whiting Business Unit in Whiting, Indiana, use seven hydrogen sulfide grab samples of loading rack emissions in lieu of installing a continuous emission monitoring system as is required by 40 CFR part 60, subpart J for a vapor combustion unit (VCU)?

A: No. British has not provided sufficient information to allow EPA to make a determination. British needs to provide additional information including: (1) An explanation of the conditions that ensures low amounts of sulfur in the gas stream at all times; (2) two weeks of additional daily H2S monitoring (14 samples); and (3) a description of how the two weeks of monitoring results compare to the typical range of H2S concentration (fuel quality) expected for the gas stream/system going to the affected fuel gas device.

Abstract for [0800051]

Q: Does EPA waive the mercury testing requirement under the National Emissions Standards for Mercury at 40 CFR 61.53 for BP Products North America, Inc. (BP) units in Indiana, since BP has demonstrated compliance with the mercury limits under the National Emission Standards for Hazardous Air Pollutants for Hazardous Waste Combustors (HWC MACT)?

A: Yes. EPA approves BP's request to use the HWC MACT testing to demonstrate compliance with the National Emission Standards for Mercury since the mercury emissions are well below the standard in the regulations.

Abstract for [0800052]

Q: Does EPA approve an alternative monitoring plan for 40 CFR part 60, subpart UUU requirements at the Criterion Catalysts & Technologies (Criterion) facility in Michigan City, Indiana? Criterion requests approval to continuously monitor the gas flow rate entering or exiting the wet scrubber in lieu of continuously monitoring the gas phase pressure drop across the scrubber.

A: Yes, conditionally. EPA concurs that the gas phase pressure drop is not an appropriate continuous monitoring parameter for a wet scrubber that does not use a Venturi design for particulate matter emission control. Pursuant to NSPS subpart UUU, EPA approves this alternative monitoring plan subject to the conditions specified in EPA's response letter to Criterion on September 6, 2007.

Abstract for [0800053]

Q: Does EPA approve an alternative timeline for well 49 at Davis Junction Landfill in Davis Junction, Illinois, to correct an exceedance of the five percent oxygen concentration standard under 40 CFR part 60, subpart WWW?

A: Yes. EPA conditionally approves Davis Junction's alternative timeline under NSPS subpart WWW. If Davis Junction cannot achieve an oxygen concentration below 5 percent by July 1, 2006, Davis Junction must expand the gas collection system within 120 days of the initial measurement of the exceedance, April 5, 2006.

Abstract for [0800054]

Q: Does EPA approve an alternative timeline to correct exceedances at the BFI Waste Systems of North American Davis Junction Landfill, located in Davis Junction, Illinois, under 40 CFR part 60, subpart WWW?

A: Yes. EPA conditionally approves Davis Junction Landfill's alternative timeline under NSPS subpart WWW. However, if Davis Junction Landfill cannot achieve an oxygen concentration below five percent by September 1, 2007, the gas collection system must be expanded within 120 days of the initial exceedance.

Abstract for [0800055]

Q: Does EPA approve an alternative monitoring plan (AMP) for the ExxonMobil (Exxon) facility in Joliet, Illinois, under 40 CFR part 60, subpart J? Exxon requests to continue the continuous monitoring of the Refinery Fuel Gas Mix Drum stream, and monitor an alternate parameter for the disulfide vent stream.

A: Yes. EPA approves this alternative monitoring request under NSPS subpart J. Exxon will continue to continuously monitor the refinery fuel gas mix drum stream and will monitor at least three times per week the weight percent of the spent wash for the Caustic Wash Drums as the alternative parameter in accordance with the AMP enclose with EPA's response.

Abstract for [0800056]

Q: Does EPA find the ALLU unit associated with the preparatory processes leading to gypsum stucco production, at the GP-Gypsum Corporation (GP) facility in Wheatfield, Indiana, is not subject to 40 CFR part 60, subpart OOO?

A: Yes. EPA finds that the ALLU unit is not subject to NSPS subpart OOO provisions. The ALLU unit is not part of the actual nonmetallic mineral production line and it does not function as a crusher, screener, or grinder; thus is not an affected facility subject to subpart OOO.

Abstract for [0800057]

Q: Does EPA approve the alternative compliance timeline to correct exeedances under CFR part 60, subpart WWW, at the Landcomp Corporation Landfill (Landcomp), located in Ottawa, Illinois?

A: No. EPA does not approve of Landcomp's request under NSPS subpart WWW. EPA does grant alternative compliance timelines to correct exceedances, but such requests need to be made within 15 days of the initial exceedance when the landfill determines that the exceedance cannot be corrected.

Abstract for [0800058]

Q: Does EPA approve the alternative timeline request from American Disposal Services of Illinois, Inc.'s Livingston Landfill (Livingston Landfill), located in Pontiac, Illinois, under 40 CFR part 60, subpart WWW?

A: Yes. EPA conditionally approves the alternative timeline under NSPS subpart WWW from Livingston's Well GW51R until December 6, 2007, to correct the August 8, 2007, positive pressure. If Livingston Landfill cannot achieve negative pressure at Well GW5IR by December 6, 2007, then Livingston Landfill must expand the gas collection system within 120 days of the initial exceedance, August 8, 2007.

Abstract for [0800059]

Q: Does EPA approve the alternative timeline request from American Disposal Services of Illinois, Inc.'s Livingston Landfill (Livingston Landfill), located in Pontiac, Illinois, under 40 CFR part 60, subpart WWW?

A: Yes. EPA conditionally approves the alternative timeline under NSPS subpart WWW from Livingston's Well

GW90 until October 5, 2007, to correct the July 12, 2007, positive pressure. If Livingston Landfill cannot achieve negative pressure at Well GW90 by October 5, 2007, then Livingston Landfill must expand the gas collection system within 120 days of the initial exceedance, July 12, 2007.

Abstract for [0800060]

Q: Does EPA approve the alternative timeline request from American Disposal Services of Illinois, Inc.'s Livingston Landfill (Livingston Landfill), located in Pontiac, Illinois, under 40 CFR part 60, subpart WWW?

A: No. EPA does not approve Livingston Landfill's request for an alternative compliance timeline as of July 31, 2007, under NSPS subpart WWW. Although EPA does grant alternative compliance timelines to correct exceedances, these requests need to be made within 15 days of the initial exceedance when the landfill determines that the exceedance cannot be corrected.

Abstract for [0800061]

Q: Does EPA approve the alternative timeline request from American Disposal Services of Illinois, Inc.'s Livingston Landfill (Livingston Landfill), located in Pontiac, Illinois, under 40 CFR part 60, subpart WWW?

A: No. EPA does not approve of Livingston Landfill's request for an alternative compliance timeline of May 30, 2007 under NSPS subpart WWW. Although EPA does grant alternative compliance timelines to correct exceedances, these requests need to be made within 15 days of the initial exceedance when the landfill determines that the exceedance cannot be corrected.

Abstract for [0800062]

Q: Does EPA approve a request for alternative temperatures at Waste Management's Milam Recycling and Disposal Facility (Milam) located in East St. Louis, Illinois, under 40 CFR part 60, subpart WWW, at wellheads MW48, MW49, MW50, MW51, MW55, MW56, and MW57?

A: Yes, on an interim basis. Milam needs to provide EPA with data that demonstrate that the increased temperature at the specific wells will not cause detrimental results, before it can provide final approval. EPA will allow Milam, in the interim, to operate wells MW48, MW49, MW50, MW51, MW55, MW56, and MW57 at the alternative temperature 140 degrees Fahrenheit and require Milam to report at least three (3) months worth of data, demonstrating that the increased temperature does not cause subsurface fires or affect levels of carbon monoxide, oxygen, or other landfill gas constituents, including the methanogenic process.

Abstract for [0800063]

Q: Waste Management's Milam Recycling and Disposal Facility (Milam) located in East St. Louis, Illinois, is subject to 40 CFR part 60, subpart WWW (NSPS). Does EPA approve an alternative temperature of 140 degrees Fahrenheit at wellheads numbers MW10, MW11, MW19, MW23, MW24, MW27, MW29, MW31, MW32, MW38, MW43, MW47, MW48, MW49, MW50, MW51, MW55, MW56, MW57, and MW53?

A: Yes. EPA finds that Milam has demonstrated that the higher operating temperatures do not cause subsurface oxidation. Therefore, EPA approves the higher operating temperature of 140 degrees Fahrenheit at the wells. Refer also to Abstract ADI Control No. 0800062.

Abstract for [0800064]

Q: Does EPA approve the alternative timeline request to correct exceedances of the five percent oxygen concentration at the Onyx-Valley View Landfill (Onyx), which is located in Decatur, Illinois, under 40 CFR part 60, subpart WWW? Onyx is specifically requesting an extension of 30 days to reduce the oxygen concentration levels below 5 percent.

A: Yes. EPA conditionally approves Onyx's alternative timeline of 30 days under NSPS subpart WWW. If Onyx cannot achieve an oxygen concentration below 5 percent within 30 days, Onyx must expand the gas collection system within 120 days of the initial measurement of the exceedance.

Abstract for [0800065]

Q1: Does EPA approve the proposal from the Veolia Environmental Services (VES) Orchard Hills Landfill located in Davis Junction, Illinois, to reduce the surface monitoring frequency in capped areas of the landfill to an annual basis, once three consecutive quarters without a monitored exceedance of the operational standard has been demonstrated in these capped areas, under 40 CFR part 60, subpart WWW?

A1: No. EPA finds that the reduced monitoring provision of NSPS does not apply under NSPS subpart WWW. VES-Orchard Hills Landfill must continue to conduct surface monitoring each quarter on areas with cover in place.

Q2: Does EPA approve the proposal from the Veolia Environmental Services (VES) Orchard Hills Landfill located in Davis Junction, Illinois, to widen the spacing between intervals from 30 meters to 60 meters in areas that have had or will have synthetic geomembrane-final cover installed after three consecutive quarters of surface emissions monitoring compliance has been met, under 40 CFR part 60, subpart WWW?

A2: Yes. EPA conditionally approves VES-Orchard's proposal. VES-Orchard's can adopt the 60 meters-spacing under NSPS subpart WWW, but only after data collected from three quarterly monitoring events demonstrate that such widening is appropriate and there is no exceedances.

Q3: Could EPA clarify for the Veolia Environmental Services (VES) Orchard Hills Landfill located in Davis Junction, Illinois, whether gas collection and control system connections to leachate management structures or to interim landfill gas collectors in areas of the landfill, which are not yet required to have controls, are subject to the monitoring and operating requirements of 40 CFR part 60, subpart WWW?

A3: No. EPA finds that if the landfill is not required to install the gas collection and control system under NSPS subpart WWW, then it is not required to monitor or operate that system.

Abstract for [0800066]

Q: Does EPA approve the alternative timeline to correct exceedances at the Allied Waste Industries, inc. Quad Cities Landfill (Quad Cities) located in Milan, Illinois, under 40 CFR part 60, subpart WWW?

A: Yes. EPA approves of Quad Cities' alternative timeline under NSPS subpart WWW. However, if Quad Cities cannot achieve an oxygen concentration below 5 percent by June 30, 2007, Quad Cities must expand the gas collection system within 120 days of the initial exceedance.

Abstract for [0800067]

Q: Quad Cities Landfill (Quad Cities) located in Milan, Illinois, is subject to 40 CFR part 60, subpart WWW. Does EPA approve its request to extend the deadline until December 1, 2006, to correct an exceedance of the five percent oxygen concentration standard at one of its gas collection wells (Well 12)?

A: No. EPA will give Quad Cities until November 2, 2006, which is 120 days from the original measured exceedance, to bring the well into compliance. If Quad Cities cannot achieve an oxygen concentration below 5 percent by November 2, 2006, Quad Cities must expand the gas collection system within

120 days of the initial measurement of the exceedance, July 5, 2006.

Abstract for [0800068]

Q1: Pursuant to 40 CFR 60 subpart WWW, may BFI Waste Systems of North America, Inc., Quad Cities Landfill, Milan, Illinois, waive nitrogen monitoring at interior wellheads and monitor only oxygen?

A1: Yes. EPA approves this request since the NSPS subpart WWW rule allows for a landfill to monitor either nitrogen or oxygen.

Q2: Pursuant to 40 CFR 60 subpart WWW, may BFI Waste Systems of North America, Inc., Quad Cities Landfill, Milan, Illinois, meet all operating conditions 180 days after start-up of new wells?

A2: No. EPA has reviewed this request further and still cannot approve this request.

Q3: Pursuant to 40 CFR 60 subpart WWW, may BFI Waste Systems of North America, Inc., Quad Cities Landfill, Milan, Illinois, treat Quad Cities Landfill as a separate landfill from Millennium Waste Landfill to reduce the frequency of surface scan requirements?

A3: No. EPA finds that the Quad Cities Landfill and the Millennium Waste Landfill are considered one landfill under the NSPS requirements.

Q4: Pursuant to 40 CFR 60 subpart WWW, may BFI Waste Systems of North America, Inc., Quad Cities Landfill, Milan, Illinois, be exempt from the monitoring, recordkeeping, and reporting requirements for treated landfill gas?

A4: Yes. EPA approved this request in the BFI Quad Cities treatment of landfill gas determination letter dated April 5, 2006. As a clarification, EPA approves the flare as part of the treatment system when it is combusting treated gas. If the flare is controlling emissions that are not treated, then it is subject to the requirements of 40 CFR 60.752(b)(2)(iii)(A) and (B).

Q5: Pursuant to 40 CFR 60, subpart WWW, may BFI Waste Systems of North America, Inc., Quad Cities Landfill, Milan, Illinois, consider as approved the closure report BFI submitted?

A5: No. EPA rejects the report, because Quad Cities Landfills and Millennium Landfill are considered one landfill under NSPS, and EPA requires the closure report to be submitted when the landfill, including Quad Cities and Millennium Landfills, ceases accepting wastes at the landfill, which has not yet occurred.

Q6: Pursuant to 40 CFR 60, subpart WWW, may BFI Waste Systems of North America, Inc., Quad Cities Landfill, Milan, Illinois, be exempt from the testing requirement under CFR part 60 subpart WWW since the landfill gas is treated?

A6: Yes. EPA approved this request in the BFI Quad Cities treatment of landfill gas determination letter dated April 5, 2006. As a clarification, EPA approves the flare as part of the treatment system when it is combusting treated gas. If the flare is controlling emissions that are not treated, then it is subject to the requirements of 40 CFR 60.752(b)(2)(iii)(A) and (B).

Abstract for [0800069]

Q1: Does EPA consider compression, de-watering, and filtering the landfill gas down to at least 10 microns a treatment under 40 CFR part 60, subpart WWW, at the BFI Waste Systems of North America, Incorporated's Quad Cities Landfill (BFI) facility located in Milam, Illinois?

A1: Yes. EPA considers compression, de-watering, and filtering the landfill gas down to at least ten microns a treatment for the purposes of 40 CFR 60.752(b)(2)(iii)(C). This response is consistent with several previous determinations made by the Agency and with the **Federal Register** Proposed Rule Amendments dated May 23, 2002.

Q2: How does EPA clarify that once the landfill gas at the BFI facility is treated pursuant to 40 CFR 60.752(b)(2)(iii)(C), it is no longer subject to the testing, monitoring, and recordkeeping requirements found at 60.752(b)(2)(iii)(B)?

A2: The **Federal Register** Proposed Rule Amendments clarify that once the landfill gas is treated, the facilities that buy or use the gas have no further obligations related to the NSPS. Therefore, EPA finds that BFI would not be subject to the testing, monitoring, and recordkeeping requirements located at 60.752(b)(2)(iii)(B). However, emissions from any atmospheric vent from the gas treatment system, including any compressor, are subject to the requirements of 40 CFR 60.752(b)(2)(iii)(A) and (B). This does not include exhaust from an energy recovery device. This determination is consistent with previous EPA determinations. The **Federal Register** Proposed Rule Amendments from 2002 are meant to be a clarification of the existing NSPS, not changes in the rule.

Abstract for [0800070]

Q: Does EPA approve the request for an alternative timeline to correct exceedances at the Allied Waste Industries, Inc. Quad Cities Landfill (Quad Cities Landfill) located in Milan, Illinois, under 40 CFR part 60, subpart WWW?

A: Yes. EPA conditionally approves an alternate timeline for Quad Cities Landfill to correct the oxygen exceedances at Well 12 but only until August 29, 2007 (not August 31, 2007 as Quad Cities Landfill requested). EPA will only approve an alternate timeline for correction of oxygen exceedances up to 120 days of the initial exceedance which in this case is August 29, 2007. If Quad Cities Landfill cannot achieve an oxygen concentration below 5 percent by August 29, 2007, then Quad Cities Landfill must have the gas collection system expanded by August 29, 2007, which is 120 days of the initial exceedance, May 1, 2007.

Abstract for [0800071]

Q: Does EPA approve Natural Gas Pipeline Company of America's request not to monitor the total sulfur content of the gaseous fuel combusted in the nine Solar Model Saturn and one Solar Model Taurus natural gas-fired turbines at its Compressor Station 113 in Shorewood, Illinois, as allowed by the revised Standards of Performance for Stationary Gas Turbines, 40 CFR part 60, subpart GG?

A: Yes. EPA approves NGPL's request not to monitor the total sulfur content because NGPL provided a Federal Energy Regulatory Commission (FERC) tariff sheet for the gaseous fuel, demonstrating that the ''maximum total sulfur content of the fuel is less than 20.0 grains/100 scf or less'' as required by 40 CFR 60.334(h)(3)(1). The State of Illinois is the delegated authority and maintains the right to implement more stringent requirements than those outlined above.

Abstract for [0800072]

Q: Does EPA approve the request from Spoon Ridge Landfill in Fairview, Illinois, to return to Tier 1 nonmethane organic compound (NMOC) emission rate reporting requirements after the current Tier 2 sampling and NMOC rate demonstration expires on April 23, 2012, under 40 CFR part 60, subpart WWW? In lieu of conducting Tier 2 sampling in 2012, Spoon Ridge would like approval to return to annual NMOC emission rate reporting in accordance with 40 CFR 60.752(b)(1)(ii) after 2012.

A: Yes. EPA finds that Tier 2 sampling would be normally required by April 23, 2012, under NSPS subpart WWW. If Spoon Ridge does not conduct this Tier 2 sampling, then 2012 emission would be calculated using Tier 1 analysis.

Abstract for [0800073]

Q: Does EPA consider that 40 CFR 60.283 applies to total reduced sulfur (TRS) emissions from digesters' condensate streams that are discharged to the waste water treatment system and released through a sewer stack for Thilmany, LLC's Kraft Pulp Mills in Kaukauna, Wisconsin, under 40 CFR part 63, subpart BB?

A: No. EPA finds that the emission limits provided under 40 CFR 60.283 do not apply to the condensate streams discharged from Thilmany's digesters. The background information documents (BID) for the Kraft Pulp Mill NSPS indicates that the intent of subpart BB was to regulate the TRS emissions in the non-condensable gases emitted from the digester systems and not the emissions caused by the dissolved TRS in the condensate streams. Furthermore, the NSPS does not show the sewer stack as being part of the affected facilities.

Abstract for [0800074]

Q: Does EPA approve the request from United States Gypsum Company (USG), located in East Chicago, Indiana, to waive, under 40 CFR part 60, subpart OOO, the minimum of 60 dry standard cubic feet (dscf) of sampling air collected per run at 40 CFR 60.675(b)(1), in addition to waiving the two minutes per point sampling requirement in Method 5?

A: Yes. EPA conditionally approves USG to carry out performance testing as described in the EPA response. This proposal suggested the sampling volume be scaled down to 30 dsfc, and that twelve points in the stack be sampled for a duration of two and a half minutes each under 40 CFR part 60, subpart OOO. USG must operate the shredder system at its maximum wallboard processing rate and comply with all other testing guidelines.

Abstract for [0800075]

Q: Does EPA find that 40 CFR part 60, subpart AAa, applies to Alton Steel, Inc.'s (Alton) Furnace No. 7 (furnace) as a result of a construction project at the facility?

A: Yes. EPA finds that it is not necessary to determine whether the projects meets one of the modification exemptions set forth at 40 CFR 60.14(e). NSPS subpart AAa applies to electric arc furnaces that are modified after August 17, 1983, and a modification is any physical or operational change which results in an increase in the emission rate to the atmosphere of any pollutant to which a standard applies.

Abstract for [0800076]

Q: Does EPA approve the alternative monitoring plan requested by CITGO's Lemont Refinery for the continuous opacity monitoring system (COMS) on the fluid catalytic cracking unit (FCCU), under 40 CFR part 60, subpart J? CITGO entered into a Consent Decree in January 2005, which required the Lemont Refinery to install a wet gas scrubber (WGS) on the FCCU unit. CITGO maintains that the moisture in the exhaust from the WGS will interfere with the ability of the COMBS to take accurate readings.

A: Yes. EPA approves an alternative monitoring plan for CITGO pursuant to 40 CFR 60.13(i)(1). The specific points of the alternative monitoring plan are specified in EPA's response to CITGO on July 23, 2007.

Abstract for [0800077]

Q: Does EPA approve the alternative timeline to correct exceedances at the Davis, Junction Landfill (Davis Junction), located in Davis Junction, Illinois, under 40 CFR part 60, subpart WWW?

A: Yes. EPA approves Davis Junction's alternative timeline under NSPS subpart WWW. If Davis Junction cannot achieve an oxygen concentration below five percent by June 1, 2007, the facility must expand the gas collection system within 120 days of the initial exceedance.

Abstract for [0800078]

Q: Does EPA approve the alternative timeline to correct exceedances at the Davis, Junction Landfill (Davis Junction), located in Davis Junction, Illinois, under 40 CFR part 60, subpart WWW?

A: Yes. EPA conditionally approves Davis Junction's alternative timeline under NSPS subpart WWW. If Davis Junction cannot achieve an oxygen concentration below five percent by June 1, 2007, the facility must expand the gas collection system within 120 days of the initial exceedance.

Abstract for [0800079]

Q: Does EPA consider the landfill gas at the Devonshire Power partners, LLC (Devonshire) Landfill, located in Dolton, Illinois, subject to the New Source Performance Standards (NSPS) and National Emission Standard for Hazardous Air Pollutants (NESHAP) requirements once treated per 40 CFR 60.752(b)(2)(iii)(c)?

A: No. EPA finds that once landfill gas is treated pursuant to 40 CFR 60.752(b)(2)(iii)(c), that the gas is no longer subject to the monitoring and recordkeeping requirements found at 40 CFR 60.756(b) and 60.758(b) and (c). The determination letter includes further compliance information.

Abstract for [0800080]

Q: Does EPA find it acceptable to inject an excess of hydrogen peroxide (H_2O_2) into the wastewater stream as a means to control the hydrogen sulfide (H_2S) emissions, instead of using a continuous monitoring system (CMS) on the infrequently operated North Benzene Removal Unit (NBRU), at the ExxonMobil Joliet Refinery, in Joliet, Illinois, under 40 CFR part 60, subpart J?

A: Yes. EPA finds that the hydrogen peroxide injection and residual hydrogen peroxide meter are a sufficient replacement of the H_2S CMS. However, EPA is not assured that 5 ppm H_2O_2 is an adequate limit to ensure compliance. EPA requires a preliminary value of at least 10 parts per million. Once ExxonMobil has submitted sufficient data to show that this limit can be lower, EPA will consider reducing the limit. EPA's May 2, 2007 response letter contains further details.

Abstract for [0800081]

Q: Does EPA approve the alternative monitoring plan for propane vapor from a vent gas absorber (VGA), requested by the ExxonMobil Joliet Refinery, located in Joliet, Illinois, under 40 CFR part 60, subpart J? ExxonMobil's proposal is to remove the car seal and allow vent gas from the VGA to be routed either to the alkylation unit's isostripper reboiler heater, or to a flare.

A: Yes. EPA conditionally approves the alternative monitoring plan under NSPS subpart J. However, the Joliet facility is required to conduct a monitoring schedule per the conditions detailed in EPA's April 26, 2008 response letter.

Abstract for [0800082]

Q: Does EPA approve the alternative monitoring plan (AMP) submitted by ExxonMobil's Joliet Refinery, located in Joliet, Illinois, for demonstrating compliance with the opacity limit under 40 CFR part 60, subpart J? The Joliet Refinery currently operates a continuous monitoring system (COMS) to demonstrate compliance.

A: Conditional. EPA approves alternative monitoring pursuant to 40 CFR part NSPS, subpart J, given five conditions are met, as outlined in the Agency's response to ExxonMobil on February 5, 2007.

Abstract for [0800083]

Q: Does EPA find that 40 CFR part 60, subpart DD, applies to a grain terminal

elevator when co-located with other facilities, as described per the request of the Illinois Environmental Protection Agency?

A: Yes. EPA finds that the applicability of NSPS subpart DD to a grain terminal elevator would not be impacted by entering into a contractual agreement with an ethanol plant. In respect to NSPS subpart DD, EPA outlined several issues regarding ownership and facilities with multiple products, as described in the EPA response letter of April 12, 2007.

Abstract for [0800084]

Q: Does EPA approve the request from the United States Gypsum Company (USG), for an alternative method for fulfilling the testing requirements at 40 CFR part 60, subpart OOO? Specifically, USG requests that Method 9 visible emission readings be utilized as an alternative method of fulfilling the test methods and procedures for determining compliance with the particulate matter standards.

A: No. EPA denies USG's request under NSPS subpart OOO. EPA will allow USG to reduce the time of each of the three test runs to thirty minutes as an alternative performance testing arrangement to fulfill the testing requirements of NSPS subpart OOO. USG must operate the shredder system at its maximum wallboard processing rate and comply with all other testing guidelines required.

Abstract for [0800085]

Q: Does EPA approve the alternative timeline request from the Valley View Landfill (Valley View), located in Decatur, Illinois, to correct an exceedance under 40 CFR part 60, subpart WWW?

A: Yes. EPA conditionally approves Valley View's alternative timeline under NSPS subpart WWW. If Valley cannot achieve an oxygen concentration below five percent by October 7, 2006, Valley View must expand the gas collection system within 120 days of the initial measurement of the exceedance.

Abstract for [0800086]

Q: Does EPA approve the change in standard operating procedures for Wells GEW–14, GEW–16, and GEW–28 at the Veolia Orchard Hills Landfill (VOHL), located in Davis Junction, Illinois, under 40 CFR part 60, subpart WWW? Specifically, VOHL requests a change involving oxygen concentration monitoring.

A: Yes. EPA conditionally approves, in part, VOHL's request to change standard operating procedures for the specified Wells under NSPS subpart 60. VOHL must continue to monitor wells for pressure, oxygen, and temperature, as well as surface monitoring for methane. VOHL must perform all necessary actions to bring oxygen concentrations below the five percent threshold and report any exceedances. Specific changes to the standard operating procedures are listed in EPA's response letter dated March 28, 2007.

Abstract for [0800087]

Q: Is a process that will collect hydrogen sulfide and other sulfur compounds and further process them to produce sulfuric acid at a synthetic natural gas plant at Power Holdings, LLC, in Illinois, subject to the New Source Performance Standards for Sulfuric Acid Plants at 40 CFR part 60, subpart H?

A: Yes. EPA finds that NSPS subpart H applies to Power Holdings because the plant will collect hydrogen sulfide and other sulfur compounds and further process them to produce sulfuric acid. Hydrogen sulfide will be burned. Furthermore, the plant would not be exempt from the rule because it is not a metallurgical plant, a chamber process plant, or an acid concentrator.

Abstract for [M080037]

Q: Request for guidance on implementation and compliance monitoring of the capture, collection and ventilation requirements in the Secondary Aluminum MACT, subpart RRR.

A: The Secondary Aluminum MACT adopts by reference Chapters 3 and 5 of the Industrial Ventilation: A Manual of Recommended Practice, 23rd edition, published by the American Conference of Governmental Industrial Hygienists (ACGIH). As required by 40 CFR 63.1506(c) of subpart RRR, owners or operators of affected sources or emissions units with add-on air pollution control devices must: Design and install a system for the capture and collection of emissions to meet the engineering standards for minimum exhaust rates as published by the American Conference of Governmental Industrial Hygienists in chapters 3 and 5 of ''Industrial Ventilation: A Manual of Recommended Practice.''

Abstract for [M080036]

Q: How can an owner or operator of a secondary aluminum production facility know that the scrap they are processing is ''entirely free of paints, coatings, and lubricants''?

A: Knowledge of whether the scrap material being processed is ''entirely free of paints, coatings, and lubricants'' can be gained through two methods. One method would be to maintain direct control of the scrap material being processed by processing scrap generated within the facility or from other facilities within the same company that the owner or operator knows has not been subjected to paints, coatings and lubricants or where they know paints, coatings and lubricants have been removed consistent with the definition of ''Clean charge.'' Similarly, the owner or operator also may process scrap from outside entities where they are familiar with the history of the scrap and, therefore, know that the scrap meets the definition of ''Clean charge.''

Abstract for [0800088]

Q1. Is the addition of three vent streams from the Delayed Coker Unit (DCU) to the common flare header connecting three flares at the Shell's Puget Sound Refinery (PSR) facility (DCU Project) that occurred in 1983 considered a modification of the flare under the New Source Performance Standards (NSPS) for Petroleum Refineries, subpart J?

A1. Yes. EPA has determined that the DCU Project resulted in a modification of the PSR flares triggering NSPS subpart J applicability. The physical change that was made upstream of the flares at a refinery process unit occurred after the effective date of the rule and it resulted in an operational change to the PSR flares since combusting gas streams not previously combusted in the flare is a change in how the flare operates. The operational change to the PSR flares resulted in an increase in the sulfur dioxide emissions rate to the atmosphere such that they were modified under the NSPS.

Q2. Is the redesign and replacement of the flare tip, a physical change to the PSR East Flare facility made in 1990, considered a modification of the flare under the NSPS subpart J?

A2. EPA agrees that if in fact the replacement of the PSR flare tip resulted in a decrease of its maximum capacity, the redesigned flare was not modified under the NSPS provisions and is not subject to NSPS subpart J. The change would decrease the kilograms per hour of hydrogen sulfide routed to the flare, resulting in an emissions decrease of sulfur dioxide emissions to the atmosphere.

Abstract for [0800089]

Q: Are the dryers at a bark burner system at a Louisiana-Pacific OSB facility in Thomasville, Alabama, ''process heaters'' and thereby excluded from 40 CFR part 60, subpart Db?

A: No. The definition of steam generating unit under NSPS subpart Db

excludes ''process heaters,'' which are defined as devices used primarily to heat a material to initiate or promote a chemical reaction. The primary purpose of heating wood flakes in the dryers is to dry them, rather than to invoke a chemical reaction either within the dryers or downstream of the dryers. Therefore, the dryers do not qualify for the process heater exclusion.

Abstract for [0800090]

Q1: Does NSPS subpart J apply to the proposed Hyperion Energy Center (HEC) near Elk Point, South Dakota?

A1: No. Subpart J applies to various affected facilities at petroleum refineries based on the date the affected facility commenced construction, reconstruction, or modification. Since the Hyperion Energy Center has not yet begun construction it is not subject to Subpart J. To be subject to subpart J, HEC's Claus sulfur recovery plant and fuel gas combustion devices would have had to begin construction on or before May 14, 2007, except for flares, which would have had to begin construction on or before June 24, 2008.

Q2: Do the synthetic gas and pressure swing adsorption (PSA) tail gas to be produced at the integrated gasification combined cycle power plant gasification block at the proposed Hyperion Energy Center near Elk Point, South Dakota, constitute ''fuel gas'' under 40 CFR part 60, subpart Ja?

A2: Yes. Because the synthetic gas and PSA tail gas will be generated at a petroleum refinery and combusted and meet the definition of ''fuel gas'' in 40 CFR 60.101a, therefore these are subject to NSPS subpart Ja. This definition is not restricted to gas produced by a refinery process unit, but even if it were, the gasification block will be a refinery process unit, because it is a segment of a refinery in which gasification, a specific processing operation, will be conducted.

Abstract for [Z080005]

Q: Is a proposed integrated gasification combined cycle (IGCC) power plant at the Hyperion Energy Center near Elk Point, South Dakota, subject to 40 CFR part 63, subpart CC?

A: Yes. Subpart CC applies to the IGCC system. The IGCC system is a ''petroleum refining process unit'' because it will be located at an establishment primarily engaged in petroleum refining and because it produces hydrogen. Additionally, the IGCC system will be located at a plant site where: (1) The plant site is a major source of hazardous air pollutants (HAPs), and (2) the IGCC system emits or has equipment containing or contacting one or more of the HAPs listed in Table 1 of Subpart CC.

Dated: December 23, 2008.

Lisa Lund,

Director, Office of Compliance.

[FR Doc. E8–31117 Filed 12–30–08; 8:45 am]

BILLING CODE 6560–50–P

FEDERAL COMMUNICATIONS COMMISSION

Notice of Public Information Collection(s) Being Submitted for Review to the Office of Management and Budget

December 19, 2008.

SUMMARY: The Federal Communications Commission, as part of its continuing effort to reduce paperwork burden invites the general public and other Federal agencies to take this opportunity to comment on the following information collection(s), as required by the Paperwork Reduction Act (PRA) of 1995, 44 U.S.C. 3501–3520. An agency may not conduct or sponsor a collection of information unless it displays a currently valid control number. No person shall be subject to any penalty for failing to comply with a collection of information subject to the Paperwork Reduction Act (PRA) that does not display a valid control number. Comments are requested concerning (a) whether the proposed collection of information is necessary for the proper performance of the functions of the Commission, including whether the information shall have practical utility; (b) the accuracy of the Commission's burden estimate; (c) ways to enhance the quality, utility, and clarity of the information collected; and (d) ways to minimize the burden of the collection of information on the respondents, including the use of automated collection techniques or other forms of information technology.

DATES: Written Paperwork Reduction Act (PRA) comments should be submitted on or before March 2, 2009. If you anticipate that you will be submitting PRA comments, but find it difficult to do so within the period of time allowed by this notice, you should advise the FCC contact listed below as soon as possible.

ADDRESSES: Direct all PRA comments to Nicholas A. Fraser, Office of Management and Budget, (202) 395–5887, or via fax at 202–395–5167 or via Internet at *Nicholas_A._Fraser@omb.eop.gov* and to *Judith-B.Herman@fcc.gov*, Federal Communications Commission, or an e-mail to *PRA@fcc.gov*. To view a copy of this information collection request (ICR) submitted to OMB: (1) Go to the Web page *http://www.reginfo.gov/public/do/PRAMain*, (2) look for the section of the Web page called ''Currently Under Review'', (3) click on the downward-pointing arrow in the ''Select Agency'' box below the ''Currently Under Review'' heading, (4) select ''Federal Communications Commission'' from the list of agencies presented in the ''Select Agency'' box, (5) click the ''Submit'' button to the right of the ''Select Agency'' box, and (6) when the list of FCC ICRs currently under review appears, look for the title of this ICR (or its OMB Control Number, if there is one) and then click on the ICR Reference Number to view detailed information about this ICR.

FOR FURTHER INFORMATION CONTACT: For additional information, contact Judith B. Herman at 202–418–0214 or via the Internet at *Judith-B.Herman@fcc.gov*.

SUPPLEMENTARY INFORMATION:

OMB Control Number: 3060–0848.

Title: Deployment of Wireline Services Offering Advanced Telecommunications Capability, CC Docket No. 98–147.

Form No.: N/A.

Type of Review: Revision of a currently approved collection.

Respondents: Business or other for-profit.

Number of Respondents: 1,400 respondents; 17,340 responses.

Estimated Time per Response: .50–26 hours.

Frequency of Response: On occasion reporting requirement and third party disclosure requirement.

Obligation To Respond: Required to obtain or retain benefits. Statutory authority for these information collections are contained in 47 U.S.C. Sections 151–154, 201–203, 251–254, 256 and 303(r) of the Communications Act of 1934, as amended.

Total Annual Burden: 61,490 hours.

Total Annual Cost: N/A.

Privacy Act Impact Assessment: N/A.

Nature and Extent of Confidentiality: The Commission is not requesting respondents to submit confidential information to the Commission. If the Commission requests respondents submit information which respondents believe is confidential, respondents may request confidential treatment of such information under 47 CFR 0.459 of the Commission's rules.

Needs and Uses: The Commission will submit this information collection to the Office of Management and Budget (OMB) after this 60 day comment period in order to obtain the full three year clearance from them. The Commission

is requesting a revision due to elimination of previously approved data element. The item eliminated is request for alternative physical access which was estimated at 700 burden hours. Other reporting requirement estimates were updated since the last submission to the OMB in 2006. Therefore, the Commission is reporting a −700 hour program change and a −103,410 hourly adjustment of the total annual burden resulting in a new estimated burden of 61,490 hours (previously estimated at 165,600 total annual burden hours) since this collection was last submitted to the OMB for review and approval in 2006.

This collection identifies 16 different information collection requirements. The Commission sought to further Congress's goal of promoting innovation and investment by all participating in the telecommunications marketplace, in order to stimulate competition for all services, including advanced telecommunications services. In furtherance of this goal, the Commission imposes certain information collection requirements on incumbent local exchange carriers (LECs) in order to ensure compliance with the incumbent LEC's collocation obligations and to assist incumbent LECs in protecting network integrity. All of the collections will be used by the Commission and by competitive carriers to facilitate the deployment of advanced services and to implement section 251 of the Communications Act of 1934, as amended.

Federal Communications Commission.

William F. Caton,

Deputy Secretary.

[FR Doc. E8–31004 Filed 12–30–08; 8:45 am]

BILLING CODE 6712–01–P

FEDERAL MARITIME COMMISSION

Ocean Transportation Intermediary License Applicants

Notice is hereby given that the following applicants have filed with the Federal Maritime Commission an application for license as a Non-Vessel Operating Common Carrier and Ocean Freight Forwarder—Ocean Transportation Intermediary pursuant to section 19 of the Shipping Act of 1984 as amended (46 U.S.C. Chapter 409 and 46 CFR part 515).

Persons knowing of any reason why the following applicants should not receive a license are requested to contact the Office of Transportation Intermediaries, Federal Maritime Commission, Washington, DC 20573.

Non-Vessel Operating Common Carrier Ocean Transportation Intermediary Applicants

The 0123 Van Lines, Inc., 501 Penhorn Ave., Unit 2, Secaucus, NJ 07094. Officer: Shinichi Hada, Secretary (Qualifying Individual).

Streamline Trade Management Inc. dba Teamwork Logistic, 177–25 Rockaway Blvd., Jamaica, NY 11434, Officer: Hsin-Hsuan Chen, President (Qualifying Individual).

CNC Worldwide, Inc., 5343 N. Imperial Hwy., Ste. 300, Los Angeles, CA 90045, Officers: Zaskia M. Barahona, Secretary (Qualifying Individual), Henry Kim, President.

Hermes Logistics, Inc., 17588 E. Rowland, #A136, City of Industry, CA 91748, Officer: Zhengqi Qian aka Jason Chien, President (Qualifying Individual).

Miami Envios Express Inc., 7468 SW 117th Ave., Miami, FL 33183. Officer: Mauricio Perez, President (Qualifying Individual).

JTS Freight Systems, LLC, 81 Belvidere Rd., Glen Rock, NJ 07452. Officer: Frank Savino, President (Qualifying Individual).

Kenny Logistics Co. dba Kenny International USA Inc., 1835 S. Nordic Rd., Mount Prospect, IL 60056. Officer: Jong Chang Song, President (Qualifying Individual).

ABC Trucking and Logistics, LLC, 3130 Locke Drive, Atlanta, GA 30315. Officers: Anthony C. Ogbodo, Manager, Cyril O. Nwanjoku, Manager (Qualifying Individuals).

Jam'n International Cargo, Inc., 2140 E. University Drive, Rancho Dominguez, CA 90220. Officers: Brian Rock, Vice President (Qualifying Individual), John Watkins, President.

Non-Vessel Operating Common Carrier and Ocean Freight Forwarder Transportation Intermediary Applicants

PAL Shipping Lines, Inc. dba Pro Ag Logistics, LLC, 12588 318th Ave., Princeton, MN 55371. Officer: Scott A. Frame, President (Qualifying Individual).

Avanti Transport Services, Incorporated, 9133 S. La Cienega Blvd, #220, Inglewood, CA 90301. Officers: Morris C. Palana, President, (Qualifying Individual), Erica Jo Formoso Plana, Secretary.

Hyundai Shipping USA Inc., 277 E. Redondo Beach Blvd., Gardena, CA 90248. Officers: Lufina Kim, Secretary (Qualifying Individual), Myeong H. Cho, President.

Allround Logistics Inc. dba Allround Maritime Services, 1809 Fashion Court, Joppa, MD 21085. Officer: Roland Meier, President (Qualifying Individual).

Sesame Auto, 780 N. Euclid Street, #204A, Anaheim, CA 92801, Ahmed Alhussaini, Sole Proprietor.

Caribbean Cargo Agencies, Inc. dba Interline Connections, 8240 zmE 52 Terrace, Miami, FL 33166. Officer: Lilia F. Dorticos, President (Qualifying Individual).

Supreme International LLC dba Supreme Maritime Services, 1021 H Street, NE., Washington, DC 20002. Officers: Jacquelyn A. Roberson, Gen. Manager (Qualifying Individual), Thomas A. Tanimowo, President.

Global Ocean and Air Cargo Services Corp., dba Global Shipping Services, 1808 Woodlawn Drive, Ste. S, Baltimore, MD 21207. Officers: Kebede Tadesse, President (Qualifying Individual), Meskerem Bogale, Director.

Adora International, LLC dba Adora, 16813 FM 1485, Conroe, TX 77306, Officer: Nancy E. Catchings, Member (Qualifying Individual).

Philbox Express, Inc., 500 Alakawa St., #120, Honolulu, HI 96817. Officers: Maria Elisa Estrada, Manager, Leandro Estrada, President (Qualifying Individuals).

Futura Logistics Corp., 6500 NW 72nd Ave., Miami, FL 33166. Officer: Rodolfo Perez, President (Qualifying Individual).

Bekins A–1 Movers, Inc., 3 S. 140 Barkley, Warrenville, IL 60555. Officers: Kenneth S. Ogden, Vice President (Qualifying Individual), Terrence G. Kostoff, President.

International Cargo Logistics, LLC, 2416 S 11th Street, Philadelphia, PA 19148. Officers: Frank Buono, Managing Member, (Qualifying Individual), Vincent Buono, Owner.

Ocean Freight Forwarder—Ocean Transportation Intermediary Applicants

Amobelge Shipping Limited Liability Company, 934 Broadway, Bayonne, NJ 07002. Officer: Alice M. Smerda, Member (Qualifying Individual).

Highlights Express International, LLC, 4274 Exeter Drive, Dumfries, VA 22025, Officers: James So Yu, Member (Qualifying Individual), Wilheimina T. Yu, Member.

Barcol International Corporation, 6952 NW 51st, Miami, FL 33168. Officers: Jun Salvat, President (Qualifying Individual), Carmen S. Salvat, Vice President.

Ecuamerica International, Inc., 5737 Benjamin Center Drive, Tampa, FL

33634. Officers: Susana M. Crecchiolo, Vice President, (Qualifying Individual), Susana de la Llana, President.

FM Shipping, LLC, 14482 Beach Blvd., Westminster, CA 92683. Officer: Ryan A. Mashaqi, President (Qualifying Individual).

CMX Global Freight Services, Inc., 5353 W. Imperial Hwy., #300, Los Angeles, CA 90045. Officers: Charles W. Dobeck, President (Qualifying Individual), Judith Dobeck, Treasurer.

Cargo Connections NC, LLC dba Transgroup International, 4119–G Rose Lake Drive, Charlotte, NC 28217. Officer: Anita Sanders, Managing Member (Qualifying Individual).

Tanga S. FitzGibbon,

Alternate Federal Register Liaison Officer.

[FR Doc. E8–31160 Filed 12–30–08; 8:45 am]

BILLING CODE 6730–01–P

FEDERAL TRADE COMMISSION

Granting of Request for Early Termination of the Waiting Period Under the Premerger Notification Rules

Section 7A of the Clayton Act, 15 U.S.C. 18a, as added by Title II of the Hart-Scott-Rodino Antitrust Improvements Act of 1976, requires persons contemplating certain mergers or acquisitions to give the Federal Trade Commission and the Assistant Attorney General advance notice and to wait designated periods before consummation of such plans. Section 7A(b)(2) of the Act permits the agencies, in individual cases, to terminate this waiting period prior to its expiration and requires that notice of this action be published in the **Federal Register**.

The following transactions were granted early termination of the waiting period provided by law and the premerger notification rules. The grants were made by the Federal Trade Commission and the Assistant Attorney General for the Antitrust Division of the Department of Justice. Neither agency intends to take any action with respect to these proposed acquisitions during the applicable waiting period.

Trans No.	Acquiring	Acquired	Entities
TRANSACTIONS GRANTED EARLY TERMINATION—12/01/2008			
20090097	Bank of America Corporation	Ray Investment S.a.r.l.	Ray Investment S.a.r.l.
20090122	Electro Scientific Industries, Inc	Zygo Corporation	Zygo Corporation.
20090124	Hamburgische Seefahrtsbeteiligung "Albert Ballin" GmbH.	TUI AG	Hapag-Lloyd Aktiengesellschaft.
20090137	Riverside Capital Appreciation Fund V, L.P.	Alan Bowden	Sencore, Inc.
20090144	Esterline Technologies Corporation	NMC Group, Inc.	NMC Group, Inc.
20090156	Insituform Technologies, Inc	The Bayou Companies, LLC	The Bayou Companies, LLC.
20090157	Audax Private Equity Fund III LP	Summerset Enterprises, L.P	United Recovery Systems, LP URS Management, LLC.
TRANSACTIONS GRANTED EARLY TERMINATION—12/02/2008			
20090134	Precision Castparts Corp	Levine Leichtman Capital Partners III, L.P.	Hackney Ladish Holding Corp.
20090147	Ryan Kavanaugh	General Electric Company	Rogue Pictures.
20090149	Odyssey Investment Partners Fund III, L.P.	SM&A	SM&A.
20090162	Texas Farm Bureau	Southern Farm Bureau Casualty Insurance Company.	Texas Farm Bureau Casualty Bureau Insurance Company.
TRANSACTIONS GRANTED EARLY TERMINATION—12/03/2008			
20090016	Blue Cross and Blue Shield of Florida, Inc.	Florida Health Care Plan, Inc	NAC Health Plan, Inc.
20090108	Silver Lake Partners II TSA, L.P.	The NASDAQ OMX Group, Inc	The NASDAQ OMX Group, Inc.
20090140	Allianz SE	The Hartford Financial Services Group, Inc.	The Hartford Financial Services Group, Inc.
20090155	General Dynamics Corporation	Carlyle Partners IV, L.P.	AXT Acquisition Holdings, Inc.
TRANSACTIONS GRANTED EARLY TERMINATION—12/05/2008			
20081392	Republic Services, Inc	Allied Waste Services, Inc	Allied Waste Services, Inc.
20090105	Hellman & Friedman Capital Partners VI, L.P..	Jupitermedia Corporation	Jupiterimages Corporation.
20090110	AT&T Inc	Wayport, Inc	Wayport, Inc.
20090161	2003 TIL Settlement	Tim & Stacy Welu	Paisley Consulting Group, Inc.
20090165	ProAssurance Corporation	Podiatry Insurance Company of America, a Mutual Company.	Podiatry Insurance Company of America, a Mutual Company.
20090166	CBIZ, Inc	Mark D. Garten	Mahoney Cohen & Company, CPA, P.C. Mahoney Cohen Consulting Corp.
20090167	Eaton Vance Corp	Martin D. Sass	M.D. Sass Tax Advantaged Bond Strategies, LLC.
20090169	JAKKS Pacific, Inc	France Private Equity II	Cesar Asia Limited Cesar S.A. Disguise Holding Corporation Disguise, Inc.
20090173	QBE Insurance Group Limited	Trident III, LLP	ZC Sterling Corporation.
20090174	ITOCHU Corporation	General Electric Company	Fox Energy Company, LLC.
20090176	United Technologies Corporation	Siamak Katal	Detection Logic Fire Protection, Inc.

Trans No.	Acquiring	Acquired	Entities
20090177	TransDigm Group Incorporated	General Electric Company	Aircraft Parts Corporation.
20090183	Tenaska Energy, Inc	American International Group, Inc	TMV Holdings, LLC.
20090184	Tenaska Energy Holdings LLC	American International Group, Inc	TMV Holdings, LLC.
TRANSACTIONS GRANTED EARLY TERMINATION—12/08/2008			
20090115	Fairholme Funds, Inc	AmeriCredit Corp	AmeriCredit Corp.
20090145	Samsung SDI Co., Ltd	Samsung Mobile Display Co., Ltd	Samsung Mobile Display Co., Ltd.
TRANSACTIONS GRANTED EARLY TERMINATION—12/09/2008			
20081463	Verizon Communications Inc	Atlantis Holdings LLC	Alltel Corporation.
20090148	Clarian Health Partners, Inc	Cardinal Health System, Inc	Ball Memorial Hospital, Inc.
20090175	Partners Limited	Norbord Inc	Norbord Inc.
TRANSACTIONS GRANTED EARLY TERMINATION—12/10/2008			
20090180	Windjammer Senior Equity Fund III, L.P.	SPC Partners II, L.P	S.T. Specialty Foods, Inc.
20090187	Compass Group PLC	Kimco Facilities Services Corporation	Kimco Facilities Services Corporation.
TRANSACTIONS GRANTED EARLY TERMINATION—12/11/2008			
20090182	Prime Financial Credit Union	Guardian Credit Union	Guardian Credit Union.
TRANSACTIONS GRANTED EARLY TERMINATION—12/12/2008			
20090190	Nestucca Forests LLC	Stimson Lumber Company, Inc	Stimson Lumber Company, Inc.
20090192	Sierra Wireless, Inc	Wavecom S.A	Wavecom S.A.
20090196	New Mountain Partners III, L.P	Tygris Commercial Finance Group, Inc	Tygris Commercial Finance Group, Inc.
20090197	TPG Partners VI, L.P	Tygris Commercial Finance Group, Inc	Tygris Commercial Finance Group, Inc.
20090199	Platinum Equity Capital Partners II, L.P.	Stephen J. Williams	International Offshore Services, LLC.

FOR FURTHER INFORMATION CONTACT: Sandra M. Peay, Contact Representative or Renee Hallman, Contact Representative, Federal Trade Commission, Premerger Notification Office, Bureau of Competition, Room H–303, Washington, DC 20580, (202) 326–3100.

By Direction of the Commission.

Donald S. Clark,

Secretary.

[FR Doc. E8–30872 Filed 12–30–08; 8:45 am]

BILLING CODE 6750–01–M

DEPARTMENT OF HEALTH AND HUMAN SERVICES

Agency for Healthcare Research and Quality

Agency Information Collection Activities: Proposed Collection; Comment Request

AGENCY: Agency for Healthcare Research and Quality, HHS.

ACTION: Notice.

SUMMARY: This notice announces the intention of the Agency for Healthcare Research and Quality (AHRQ) to request that the Office of Management and Budget (OMB) approve the proposed information collection project: ''The AHRQ Data Inventory.'' In accordance with the Paperwork Reduction Act of 1995, 44 U.S.C. 3506(c)(2)(A), AHRQ invites the public to comment on this proposed information collection.

This proposed information collection was previously published in the **Federal Register** on October 24th, 2008 and allowed 60 days for public comment. One comment was received. The purpose of this notice is to allow an additional 30 days for public comment.

DATES: Comments on this notice must be received by January 30, 2009.

ADDRESSES: Written comments should be submitted to: AHRQ's OMB Desk Officer by fax at (202) 395–6974 (Attention: AHRQs desk officer) or by e-mail at *OIRA_submission@omb.eop.gov* (attention: AHRQ's desk officer).

Copies of the proposed collection plans, data collection instruments, and specific details on the estimated burden can be obtained from the AHRQ Reports Clearance Officer.

FOR FURTHER INFORMATION CONTACT: Doris Lefkowitz, AHRQ Reports Clearance Officer, (301) 427–1477, or by e-mail at *doris.lefkowitz@ahrq.hhs.gov*.

SUPPLEMENTARY INFORMATION:

Proposed Project: ''The AHRQ Data Inventory''

The Agency for Healthcare Research and Quality (AHRQ) is interested in determining the availability of regularly collected administrative and other data collection initiatives about outpatient health service utilization. AHRQ seeks to better understand issues in developing data collection initiatives, redundancies in these initiatives, uses of available data, gaps in available information, similarities across data projects, and areas for possible collaboration and coordination. AHRQ's initial focus is on those data sets that would inform healthcare providers, policymakers, and consumers about outpatient health service utilization and episodes of care.

The primary purpose of this information collection is to comprehensively document outpatient health care data collection initiatives in the 50 states, the District of Columbia, and other geographic units. Information being collected about the data sets is not readily available to the public. In-depth information about the data sets will provide guidance to AHRQ on the potential synergy across such initiatives and suggest how the information can inform Federal, State, and local health care policymakers, clinicians, and consumers. Information collected during the interviews will comprehensively document outpatient health care data collection initiatives.

This project is important for several reasons. First, many data collection initiatives exist or are in the planning

stages, but there is limited collaboration and synthesis among initiatives. With limited resources and common goals, it is imperative to understand the issues in developing data collection initiatives, redundancies in such initiatives, and gaps in available information. Second, with the increasing costs of health care, it has become more important than ever to use health services efficiently, yet care and information about care is often collected and delivered in isolation without coordination across sites or providers of care. The results of this project will provide AHRQ and other policymakers with the information they need to serve as a catalyst to promote coordinated standardization, reduce redundancies, identify gaps in information, and assist in further development of needed data efforts.

This project is being conducted pursuant to AHRQ's statutory mandates to (1) promote health care quality improvement by conducting and supporting research that develops and presents scientific evidence regarding all aspects of health care, including the costs and utilization of, and access to, health care and the ways in which health care services are organized, delivered, and financed (42 U.S.C. 299(b)(l)(D) and (E)); (2) conduct and support research on health care and on systems for the delivery of such care (42 U.S.C. 299a(a)); and (3) conduct and support research to advance the creation of effective linkages between various sources of health information (42 U.S.C. 299b–3(a)(3)).

Method of Collection

The survey will be initiated with an e-mail message from AHRQ to managers/administrators of each data set selected for inclusion in the Inventory. Data sets listed in the inventory were identified from a search of Web-based information about outpatient and ambulatory patient care data sets. The initial contact will be followed by an e-mail distribution of a cover letter and the questionnaire. The cover letter will include information about the purpose of the study, reason respondents are being contacted, information about the nondisclosure of their responses, and a request to have respondents review information captured from the Internet about their data sets. In addition, respondents will be informed that they have the option to complete and return the questionnaire electronically or participate in a telephone interview. Respondents who do not return their questionnaires by the requested time will get an e-mail reminder. The e-mail reminder will be followed by a telephone reminder.

Estimated Annual Respondent Burden

Exhibit 1 shows the estimated annual burden hours for the respondent's time to participate in this project. A maximum of 80 respondents will complete the survey questionnaire which will require about 45 minutes to complete. The total estimated burden hours for this information collection is 60 hours.

Exhibit 2 show the estimated cost burden based on the respondent's time to participate in this project. The total cost burden is approximately $2,993.

EXHIBIT 1—ESTIMATED ANNUALIZED BURDEN HOURS

Form name	Number of respondents	Number of responses per respondent	Hours per response	Total burden hours
Inventory Survey	80	1	45/60	60
Total	80	1	na	60

EXHIBIT 2—ESTIMATED ANNUALIZED COST BURDEN

Form name	Number of respondents	Total burden hours	Average hourly wage rate *	Total costs burden
Inventory Survey	80	60	$49.89	$2,993
Total	80	60	na	2,993

* Based upon the mean of general and operations managers (11–102 1), National Compensation Survey: Occupational Wages in the United States 2007, U.S. Department of Labor, Bureau of Labor Statistics.

Estimated Annual Costs to the Federal Government

This one-year project is estimated to cost the government $136,000. Exhibit 3 details the costs associated with this project, which include $11,000 for project development, $72,500 for data collection and analysis, $12,000 for preparing reports, $20,000 for project management and $21,000 for overhead.

EXHIBIT 3—PROJECT COSTS

Cost component	Total cost
Project Development	$11,000.00
Data Collection and Analysis	72,500.00
Preparation of Reports	12,000.00
Project Management	20,000.00
Overhead	21,000.00
Total	136,500.00

Request for Comments

In accordance with the above-cited Paperwork Reduction Act legislation, comments on AHRQ's information collection are requested with regard to any of the following: (a) Whether the proposed collection of information is necessary for the proper performance of AHRQ health care research and health care information dissemination functions, including whether the information will have practical utility; (b) the accuracy of AHRQ's estimate of burden (including hours and costs) of the proposed collection(s) of information; (c) ways to enhance the quality, utility, and clarity of the information to be collected; and (d) ways to minimize the burden of the collection of information upon the respondents, including the use of automated collection techniques or other forms of information technology.

Comments submitted in response to this notice will be summarized and included in the Agency's subsequent

request for OMB approval of the proposed information collection. All comments will become a matter of public record.

Dated: December 17, 2008.

Carolyn M. Clancy,

Director.

[FR Doc. E8–30762 Filed 12–30–08; 8:45 am]

BILLING CODE 4160–90–M

DEPARTMENT OF HEALTH AND HUMAN SERVICES

Centers for Disease Control and Prevention

Board of Scientific Counselors, National Center for Injury Prevention and Control: Notice of Charter Amendment

This gives notice under the Federal Advisory Committee Act (Pub. L. 92–463) of October 6, 1972, that the statutory requirements of the Advisory Committee for Injury Prevention and Control (ACIPC) have been transferred to the Board of Scientific Counselors, National Center for Injury Prevention and Control (BSC, NCIPC).

The ACIPC was established on October 18, 1988, in accordance with Public Law 92–463, as amended (5 U.S.C. App. 2). Section 394(a) of the Public Health Service Act, (42 U.S.C. 280b–2(a)), as amended, directed the Secretary, Department of Health and Human Services, acting through the Director, CDC, to establish an advisory committee to provide advice with respect to the prevention and control of injuries. On October 28, 1994, ACIPC was reestablished under statute.

The responsibilities of ACIPC have been assumed by the BSC, NCIPC. By assuming the statutorily mandated responsibilities of ACIPC, the BSC, NCIPC will thereby become a statutorily mandated committee, continuing to serve the purposes set forth by Section 394(a) of the Public Health Service Act.

For information, contact Gwendolyn Cattledge, Ph.D., Executive Secretary, Board of Scientific Counselors, National Center for Injury Prevention and Control, Centers for Disease Control and Prevention, Department of Health and Human Services, 4770 Buford Highway, Mailstop K02, Atlanta, Georgia 30341, telephone (770) 488–4655 or fax (770) 488–4422.

The Director, Management Analysis and Services Office, has been delegated the authority to sign **Federal Register** notices pertaining to announcements of meetings and other committee management activities, for both the Centers for Disease Control and Prevention and the Agency for Toxic Substances and Disease Registry.

Dated: December 17, 2008.

Elaine L. Baker,

Director, Management Analysis and Services Office, Centers for Disease Control and Prevention.

[FR Doc. E8–31111 Filed 12–30–08; 8:45 am]

BILLING CODE 4163–18–P

DEPARTMENT OF HEALTH AND HUMAN SERVICES

Centers for Medicare & Medicaid Services

Privacy Act of 1974; Notice of Modified System of Records

AGENCY: Department of Health and Human Services (HHS), Centers for Medicare & Medicaid Services (CMS).

ACTION: Notice of a Modified System of Records.

SUMMARY: In accordance with the requirements of the Privacy Act of 1974, CMS is proposing to make minor amendments to an existing system of records (SOR) titled, ''Performance Measurement and Reporting System (PMRS),'' System No. 09–70–0584, published at 72 FR 52133 (September 12, 2007). PMRS serves as a master system of records to assist in projects that provide transparency in health care on a broad scale enabling consumers to compare the quality and price of health care services so that they can make informed choices among individual physicians, practitioners, and other providers of services. We are making minor amendments to PMRS to include two additional legal authorities: The Medicare, Medicaid, and SCHIP Extension Act of 2007 (MMSEA) (Pub. L. 110–173) and the Medicare Improvements for Patients and Providers Act of 2008 (MIPPA) (Pub. L. 110–275). Section 101(b) of the MMSEA amended section 1848(k)(2)(B) of the Social Security Act (the Act) (42 U.S.C. 1395w–4) and section 101(c) of division B of the Tax Relief and Health Care Act of 2006 to extend the Physician Quality Reporting Initiative (PQRI). MIPPA, effective July 15, 2008, extended the PQRI for 2010 and subsequent years and authorized a new incentive program for successful electronic prescribers under section 1848(m)(2) of the Act. In addition, the MIPPA requires the Secretary to post on the CMS Web site the names of eligible professionals or group practices who satisfactorily submit data on quality measures through PQRI and the names of those eligible professionals or group practices who are successful electronic prescribers. This requirement is codified at section 1848(m)(5)(G) of the Act. Accordingly, CMS is adding §§ 131 and 132 of MIPPA, § 101 of MMSEA, § 1848(k) of the Act, and § 1848(m) of the Act to the PMRS' legal authority section.

In addition, we are clarifying in this notice that the term, ''performance measurement results'' used in the PMRS includes, but is not limited to, submission of data on measures, e-prescribing usage, frequency of reporting or performance, as well as rates or scores based on application of specific measures. We consider all of these types of information to be valid indicators of a physician's, practitioner's, or other provider's commitment to and delivery of high quality, high value health care.

The primary purpose of this system is to support the collection, maintenance, and processing of information to promote the delivery of high quality, efficient, effective, and economical health care services, and promoting the quality and efficiency of services of the type for which payment may be made under title XVIII by allowing for the establishment and implementation of performance measures, the provision of feedback to physicians, and public reporting of performance information. Information in this system will also be disclosed to: (1) Support regulatory, reimbursement, and policy functions performed for the Agency or by a contractor, consultant, or a CMS grantee; (2) assist another Federal and/or state agency, agency of a state government, or an agency established by state law; (3) promote more informed choices by Medicare beneficiaries among their Medicare group options by making physician performance measurement information available to Medicare beneficiaries through a Web site and other forms of data dissemination; (4) provide CVEs and data aggregators with information that will assist in generating single or multi-payer performance measurement results to promote transparency in health care to members of their community; (5) assist individual physicians, practitioners, providers of services, suppliers, laboratories, and other health care professionals who are participating in health care transparency projects; (6) assist individuals or organizations with projects that provide transparency in health care on a broad scale enabling consumers to compare the quality and price of health care services; or for research, evaluation, and epidemiological projects related to the prevention of disease or disability;

restoration or maintenance of health or for payment purposes; (7) assist Quality Improvement Organizations; (8) support litigation involving the agency; and (9) and (10) combat fraud, waste, and abuse in certain health benefits programs. We have provided background information about this modified system in the **SUPPLEMENTARY INFORMATION** section below

DATES: *Effective Dates:* The minor amendments contained in this notice are effective upon publication in the **Federal Register**.

FOR FURTHER INFORMATION CONTACT: Aucha Prachanronarong, Health Insurance Specialist, Division of Ambulatory Care and Measure Management, Quality Measurement and Health Assessment Group, Office of Clinical Standards and Quality, CMS, Room C1–23–14, 7500 Security Boulevard, Baltimore, Maryland 21244–1850. The telephone number is (410) 786–1879 or contact *Aucha.Prachanronarong@cms.hhs.gov.*

SUPPLEMENTARY INFORMATION: The Value-driven Health Care Initiative is designed to achieve four cornerstones: Interoperable health information technology (HIT); transparency of price information; transparency of quality information; and the use of incentives to promote high-quality and cost-efficient health care. Regional/local public-private collaboration is essential to the success of this Initiative. As such, the Initiative is encouraging the growth of regional public-private collaboratives that will be chartered by the Agency for Healthcare Research and Quality (AHRQ) to support and achieve the four cornerstones. Only mature, sustainable, multi-stakeholder entities that are committed to achieving the four cornerstones, including publicly reporting physician-level and other provider performance measurement information and facilitating the use of this information to improve the quality and efficiency of health care delivery, will become Chartered Value Exchanges (CVEs).

Provided they meet certain criteria established by CMS and disclosure is consistent with the Privacy Act, the Health Insurance Portability and Accountability Act (HIPAA) Privacy Rule and other applicable laws, CMS may provide CVEs with patient de-identified Medicare-inclusive individual physician-level or group practice level performance measurement results. CMS also may provide physician and patient identifiable protected health claims data information to data aggregators that are HIPAA business associates of CMS (including working with providers, payers, or other HIPAA covered entities) for purposes for generating these results. The patient de-identified results will be calculated using Medicare claims data based on consensus-based measures as determined by CMS, including but not limited to quality, resource use, efficiency, and utilization metrics. Available results may include single payer (i.e., Medicare only and private payer only performance measurement results) and/or multi-payer (i.e., results generated from merging or combining Medicare results with private payer results) patient de-identified, individual physician-level performance measurement results. CMS also may make patient de-identified and individual physician-level or group practice level performance measurement results available to Medicare beneficiaries, and others that meet CMS requirements for disclosure.

CMS also has implemented a pilot project known as, ''The Better Quality Information to Improve Care for Medicare Beneficiaries (BQI) Project'' to develop a model to combine data, quality measurement, and public reporting. Through the BQI project, each pilot collaborative, as a QIO subcontractor, is combining private claims data with Medicare claims data and, in some cases, Medicaid claims data to produce single payer and/or multi-payer, patient de-identified, individual physician-level or group practice level performance measurement results using quality measures that are approved by CMS. These performance measurement results were made available to Medicare beneficiaries by CMS or a CMS contractor.

In addition, as required by the Tax Relief and Health Care Act of 2006, CMS implemented a voluntary Physician Quality Reporting Initiative (PQRI). Under PQRI, eligible professionals who choose to participate and satisfactorily report on a designated set of quality measures for services paid under the Medicare Physician Fee Schedule and provided to Medicare beneficiaries under the traditional fee-for-service program, may earn an incentive payment. Participating eligible professionals whose Medicare patients in the traditional fee-for-service program fit the specifications of the PQRI quality measures will report the corresponding appropriate Common Procedural Terminology (CPT) Category II codes or G-codes on their claims or through qualified PQRI registries.

In 2009, CMS also will implement an Electronic Prescribing (E-Prescribing) Incentive Program as required by the MIPPA. Eligible professionals who choose to participate and are successful electronic prescribers may earn an incentive payment. MIPPA also requires CMS to publicly report the names of eligible professionals or group practices who satisfactorily submit data on quality measures through PQRI and the names of those eligible professionals or group practices who are successful e-prescribers.

CMS may publicly report additional performance information, including submission of data on measures, e-prescribing usage, frequency of reporting or performance, as well as specific rates or scores based on application of specific measures. CMS considers all of these types of information to be valid indicators of a physician, practitioner, or other health care provider's commitment to and delivery of high quality, high value health care.

I. Description of the Proposed System of Records

A. Statutory and Regulatory Basis for System

Authority for the collection, maintenance, and disclosures from this system is given under provisions of §§ 1152, 1153(c), 1153(e), 1154, 1160, 1848(k), 1848(m), 1851(d) and 1862(g) of the Social Security Act; § 101 of division B of the Tax Relief and Health Care Act of 2006; § 101 of the Medicare, Medicaid, and SCHIP Extension Act of 2007, §§ 131 and 132 of MIPPA, and §§ 901, 912, and 914 of the Public Health Service Act.

B. Collection and Maintenance of Data in the System

The system contains single and multi-payer, patient de-identified, individual physician-level performance measurement results as well as, patient identifiable clinical and claims information provided by individual physicians, practitioners and providers of services, individuals assigned to provider groups, insurance and provider associations, government agencies, accrediting and quality organizations, and others who are committed to improving the quality of physician services. This system contains the patient's or beneficiary's name, sex, health insurance claim number (HIC), Social Security Number (SSN), address, date of birth, medical record number(s), prior stay information, provider name and address, physician's name, and/or identification number, date of admission or discharge, other health insurance, diagnosis, surgical procedures, and a statement of services rendered for related charges and other

data needed to substantiate claims. The system contains provider characteristics, prescriber identification number(s), assigned provider number(s) (facility, referring/servicing physician), and national drug code information, total charges, and Medicare payment amounts.

II. Agency Policies, Procedures, and Restrictions on Routine Uses

The Privacy Act permits us to disclose information without an individual's consent/authorization if the information is to be used for a purpose that is compatible with the purpose(s) for which the information was collected. Any such disclosure of data is known as a ''routine use.'' The agency policies, procedures, and restriction on routine uses for the PMRS were published in the **Federal Register** on September 12, 2007. See 72 FR 52133 (Sept. 12, 2007) for further information.

III. Routine Use Disclosures of Data In the System

For further information on the routine uses for the PMRS, please see 72 FR 52133.

IV. Safeguards

CMS has safeguards in place for authorized users and monitors such users to ensure against unauthorized use. Personnel having access to the system have been trained in the Privacy Act and information security requirements. Employees who maintain records in this system are instructed not to release data until the intended recipient agrees to implement appropriate management, operational and technical safeguards sufficient to protect the confidentiality, integrity and availability of the information and information systems and to prevent unauthorized access.

This system will conform to all applicable Federal laws and regulations and Federal, HHS, and CMS policies and standards as they relate to information security and data privacy. These laws and regulations include but are not limited to: The Privacy Act of 1974; the Federal Information Security Management Act of 2002; the Computer Fraud and Abuse Act of 1986; the Health Insurance Portability and Accountability Act of 1996; the E-Government Act of 2002, the Clinger-Cohen Act of 1996; the Medicare Modernization Act of 2003, and the corresponding implementing regulations. OMB Circular A–130, Management of Federal Resources, Appendix III, Security of Federal Automated Information Resources also applies. Federal, HHS, and CMS policies and standards include but are not limited to: All pertinent National Institute of Standards and Technology publications; the HHS Information Systems Program Handbook and the CMS Information Security Handbook.

V. Effects of the New System on the Rights of Individuals

CMS proposes to establish this system in accordance with the principles and requirements of the Privacy Act and will collect, use, and disseminate information only as prescribed therein. We will only disclose the minimum personal data necessary to achieve the purpose of PMRS. Disclosure of information from the system will be approved only to the extent necessary to accomplish the purpose of the disclosure. CMS has assigned a higher level of security clearance for the information maintained in this system in an effort to provide added security and protection of data in this system.

CMS will take precautionary measures to minimize the risks of unauthorized access to the records and the potential harm to individual privacy or other personal or property rights. CMS will collect only that information necessary to perform the system's functions. In addition, CMS will make disclosure from the proposed system only with consent of the subject individual, or his/her legal representative, or in accordance with an applicable exception provision of the Privacy Act. CMS, therefore, does not anticipate an unfavorable effect on individual privacy as a result of the disclosure of information relating to individuals.

Dated: December 18, 2008.

Charlene Frizzera,

Chief Operating Officer, Centers for Medicare & Medicaid Services.

System No. 09–70–0584

SYSTEM NAME:

''Performance Measurement and Reporting System (PMRS),'' HHS/CMS/OCSQ.

SECURITY CLASSIFICATION:

Level Three Privacy Act Sensitive.

SYSTEM LOCATION:

CMS Data Center, 7500 Security Boulevard, North Building, First Floor, Baltimore, Maryland 21244–1850 and at various contractor sites.

CATEGORIES OF INDIVIDUALS COVERED BY THE SYSTEM:

The system contains single and multi-payer, patient de-identified, individual physician, practitioner or other provider-level performance measurement results as well as, clinical and claims information provided by individual physicians, practitioners and providers of services, individuals assigned to provider groups, insurance and provider associations, government agencies, accrediting and quality organizations, and others who are committed to improving the quality of physician, practitioner, and other providers' services.

CATEGORIES OF RECORDS IN THE SYSTEM:

This system contains the patient's or beneficiary's name, sex, health insurance claim number (HIC), Social Security Number (SSN), address, date of birth, medical record number(s), prior stay information, provider name and address, physician's name, and/or identification number, date of admission or discharge, other health insurance, diagnosis, surgical procedures, and a statement of services rendered for related charges and other data needed to substantiate claims. The system contains provider characteristics, prescriber identification number(s), assigned provider number(s) (facility, referring/servicing physician), and national drug code information, total charges, and Medicare payment amounts.

AUTHORITY FOR MAINTENANCE OF THE SYSTEM:

Authority for the collection, maintenance, and disclosures from this system is given under provisions of §§ 1152, 1153(c), 1153(e), 1154, 1160, 1848(k), 1848(m), 1851(d) and 1862(g) of the Social Security Act; § 101 of division B of the Tax Relief and Health Care Act of 2006; § 101 of the Medicare, Medicaid, and SCHIP Extension Act of 2007, §§ 131 and 132 of the Medicare Improvements for Patients and Providers Act of 2008, and §§ 901, 912, and 914 of the Public Health Service Act.

PURPOSE(S) OF THE SYSTEM:

The primary purpose of this system is to support the collection, maintenance, and processing of information to promote the delivery of high quality, efficient, effective and economical delivery of health care services, and promoting the quality of services of the type for which payment may be made under title XVIII by allowing for the establishment and implementation of performance measures, provision of feedback to physicians, and public reporting of performance information. Information in this system will also be disclosed to: (1) Support regulatory, reimbursement, and policy functions performed for the Agency or by a contractor, consultant, or a CMS

grantee; (2) assist another Federal and/or state agency, agency of a state government, or an agency established by state law; (3) promote more informed choices by Medicare beneficiaries among their Medicare group options by making physician performance measurement information available to Medicare beneficiaries through a Web site and other forms of data dissemination; (4) provide CVEs and data aggregators with information that will assist in generating single or multi-payer performance measurement results to promote transparency in health care to members of their community; (5) assist individual physicians, practitioners, providers of services, suppliers, laboratories, and other health care professionals who are participating in health care transparency projects; (6) assist individuals or organizations with projects that provide transparency in health care on a broad-scale enabling consumers to compare the quality and price of health care services; or for research, evaluation, and epidemiological projects related to the prevention of disease or disability; restoration or maintenance of health or for payment purposes; (7) assist Quality Improvement Organizations; (8) support litigation involving the agency; and (9) and (10) combat fraud, waste, and abuse in certain health benefits programs.

ROUTINE USES OF RECORDS MAINTAINED IN THE SYSTEM, INCLUDING CATEGORIES OR USERS AND THE PURPOSES OF SUCH USES:

A. Entities Who May Receive Disclosures Under Routine Use

These routine uses specify circumstances, in addition to those provided by statute in the Privacy Act of 1974, under which CMS may release information from the PMRS without the consent/authorization of the individual to whom such information pertains. Each proposed disclosure of information under these routine uses will be evaluated to ensure that the disclosure is legally permissible, including but not limited to ensuring that the purpose of the disclosure is compatible with the purpose for which the information was collected. We propose to establish the following routine use disclosures of information maintained in the system:

1. To support Agency contractors, consultants, or CMS grantees who have been engaged by the Agency to assist in accomplishment of a CMS function relating to the purposes for this SOR and who need to have access to the records in order to assist CMS.

2. Pursuant to agreements with CMS to assist another Federal or state agency, agency of a state government, or an agency established by state law to:

a. Contribute to projects that provide transparency in health care on a broad-scale enabling consumers to compare the quality and price of health care services,

b. Contribute to the accuracy of CMS's proper payment of Medicare benefits,

c. Enable such agency to administer a Federal health benefits program, or as necessary to enable such agency to fulfill a requirement of a Federal statute or regulation that implements a health benefits program funded in whole or in part with Federal funds, and/or

d. Assist Federal/state Medicaid programs which may require PMRS information for purposes related to this system.

3. To assist in making the individual physician-level performance measurement results available to Medicare beneficiaries, through a Web site and other forms of data dissemination, in order to promote more informed choices by Medicare beneficiaries among their Medicare coverage options.

4. To provide Chartered Value Exchanges (CVE) and data aggregators with information that will assist in generating single or multi-payer performance measurement results that will assist beneficiaries in making informed choices among individual physicians, practitioners and providers of services; enable consumers to compare the quality and price of health care services; and assist in providing transparency in health care at the local level if CMS:

determines that the use or disclosure does not violate legal limitations under which the record was provided, collected, or obtained;

a. Determines that the purpose for which the disclosure is to be made:

(1) Is of sufficient importance to warrant the effect and/or risk on the privacy of the individual that additional exposure of the record might bring, and

(2) There is reasonable probability that the objective for the use would be accomplished;

b. Requires the recipient of the information to establish reasonable administrative, technical, and physical safeguards to prevent unauthorized use or disclosure of the record,

c. Make no further use or disclosure of the record except:

(1) For use in another project providing transparency in health care, under these same conditions, and with written authorization of CMS;

(2) When required by law.

d. Secures a written statement attesting to the information recipient's understanding of and willingness to abide by these provisions. CVEs and data aggregators should complete a Data Use Agreement (CMS Form 0235) in accordance with current CMS policies.

5. To assist individual physicians, practitioners, providers of services, suppliers, laboratories, and others health care professionals who are participating in health care transparency projects.

6. To assist an individual or organization with projects that provide transparency in health care on a broad-scale enabling consumers to compare the quality and price of health care services; or for research, evaluation, and epidemiological projects related to the prevention of disease or disability; restoration or maintenance of health or for payment purposes if CMS:

a. Determines that the use or disclosure does not violate legal limitations under which the record was provided, collected, or obtained;

b. Determines that the purpose for which the disclosure is to be made:

(1) Cannot be reasonably accomplished unless the record is provided in individually identifiable form,

(2) Is of sufficient importance to warrant the effect and/or risk on the privacy of the individual that additional exposure of the record might bring, and

(3) There is reasonable probability that the objective for the use would be accomplished;

c. Requires the recipient of the information to:

(1) Establish reasonable administrative, technical, and physical safeguards to prevent unauthorized use or disclosure of the record, and

(2) Remove or destroy the information that allows the individual to be identified at the earliest time at which removal or destruction can be accomplished consistent with the purpose of the project, unless the recipient presents an adequate justification of a research or health nature for retaining such information, and

(3) Make no further use or disclosure of the record except:

(a) For disclosure to a properly identified person, for purposes of providing transparency in health care enabling consumers to compare the quality and price of health care services so that they can make informed choices among individual physicians, practitioners and providers of services;

(b) In emergency circumstances affecting the health or safety of any individual;

(c) For use in another research project, under these same conditions, and with written authorization of CMS;

(d) For disclosure to a properly identified person for the purpose of an audit related to the research project, if information that would enable research subjects to be identified is removed or destroyed at the earliest opportunity consistent with the purpose of the audit; or

(e) When required by law.

d. Secures a written statement attesting to the information recipient's understanding of and willingness to abide by these provisions. Researchers should complete a Data Use Agreement (CMS Form 0235) in accordance with current CMS policies.

7. To support Quality Improvement Organizations (QIO) in connection with review of claims, or in connection with studies or other review activities conducted pursuant to Part B of Title XI of the Act and in performing affirmative outreach activities to individuals for the purpose of establishing and maintaining their entitlement to Medicare benefits or health insurance plans.

8. To support the Department of Justice (DOJ), court, or adjudicatory body when:

a. The Agency or any component thereof, or

b. Any employee of the Agency in his or her official capacity, or

c. Any employee of the Agency in his or her individual capacity where the DOJ has agreed to represent the employee, or

d. The United States Government,

is a party to litigation or has an interest in such litigation, and by careful review, CMS determines that the records are both relevant and necessary to the litigation and that the use of such records by the DOJ, court or adjudicatory body is compatible with the purpose for which the agency collected the records.

9. To assist a CMS contractor (including, but not limited to MACs, fiscal intermediaries and carriers) that assists in the administration of a CMS-administered health benefits program, or to a grantee of a CMS-administered grant program, when disclosure is deemed reasonably necessary by CMS to prevent, deter, discover, detect, investigate, examine, prosecute, sue with respect to, defend against, correct, remedy, or otherwise combat fraud, waste or abuse in such program.

10. To assist another Federal agency or to an instrumentality of any governmental jurisdiction within or under the control of the United States (including any state or local governmental agency), that administers, or that has the authority to investigate potential fraud, waste or abuse in a health benefits program funded in whole or in part by Federal funds, when disclosure is deemed reasonably necessary by CMS to prevent, deter, discover, detect, investigate, examine, prosecute, sue with respect to, defend against, correct, remedy, or otherwise combat fraud, waste or abuse in such programs.

B. Additional Circumstances Affecting Routine Use Disclosures

To the extent this system contains Protected Health Information (PHI) as defined by HHS regulation ''Standards for Privacy of Individually Identifiable Health Information'' (45 CFR Parts 160 and 164, Subparts A and E) 65 Fed. Reg. 82462 (12–28–00). Disclosures of such PHI that are otherwise authorized by these routine uses may only be made if, and as, permitted or required by the ''Standards for Privacy of Individually Identifiable Health Information.'' (See 45 CFR 164–512(a)(1).)

POLICIES AND PRACTICES FOR STORING, RETRIEVING, ACCESSING, RETAINING, AND DISPOSING OF RECORDS IN THE SYSTEM:

STORAGE:

Records are stored on both tape cartridges (magnetic storage media) and in a DB2 relational database management environment (DASD data storage media).

RETRIEVABILITY:

Information is most frequently retrieved by HICN, provider number (facility, physician, IDs), service dates, and beneficiary state code.

SAFEGUARDS:

CMS has safeguards in place for authorized users and monitors such users to ensure against unauthorized use. Personnel having access to the system have been trained in the Privacy Act and information security requirements. Employees who maintain records in this system are instructed not to release data until the intended recipient agrees to implement appropriate management, operational and technical safeguards sufficient to protect the confidentiality, integrity and availability of the information and information systems and to prevent unauthorized access.

This system will conform to all applicable Federal laws and regulations and Federal, HHS, and CMS policies and standards as they relate to information security and data privacy. These laws and regulations include but are not limited to: The Privacy Act of 1974; the Federal Information Security Management Act of 2002; the Computer Fraud and Abuse Act of 1986; the Health Insurance Portability and Accountability Act of 1996; the E-Government Act of 2002, the Clinger-Cohen Act of 1996; the Medicare Modernization Act of 2003, and the corresponding implementing regulations. OMB Circular A–130, Management of Federal Resources, Appendix III, Security of Federal Automated Information Resources also applies. Federal, HHS, and CMS policies and standards include but are not limited to: All pertinent National Institute of Standards and Technology publications; the HHS Information Systems Program Handbook and the CMS Information Security Handbook.

RETENTION AND DISPOSAL:

Records are maintained with identifiers for all transactions after they are entered into the system for a period of 20 years. Records are housed in both active and archival files. All claims-related records are encompassed by the document preservation order and will be retained until notification is received from the Department of Justice.

SYSTEM MANAGER AND ADDRESS:

Director, Quality Measurement and Health Assessment Group, Office of Clinical Standards and Quality, CMS, Room C1–23–14, 7500 Security Boulevard, Baltimore, Maryland 21244–1850.

NOTIFICATION PROCEDURE:

For purpose of notification, the subject individual should write to the system manager who will require the system name, and the retrieval selection criteria (e.g., HICN, Provider number, etc.).

RECORD ACCESS PROCEDURE:

For purpose of access, use the same procedures outlined in Notification Procedures above. Requestors should also reasonably specify the record contents being sought. (These procedures are in accordance with Department regulation 45 CFR 5b.5(a)(2).)

CONTESTING RECORD PROCEDURES:

The subject individual should contact the system manager named above, and reasonably identify the record and specify the information to be contested. State the corrective action sought and the reasons for the correction with supporting justification. (These procedures are in accordance with Department regulation 45 CFR 5b.7.)

RECORD SOURCE CATEGORIES:

Medicare Beneficiary Database (09–70–0536), National Claims History File (09–70–0558), and private physicians, private providers, laboratories, other providers and suppliers who are

participating in health care transparency projects sponsored by the Agency.

SYSTEMS EXEMPTED FROM CERTAIN PROVISIONS OF THE ACT:

None.

[FR Doc. E8–31146 Filed 12–30–08; 8:45 am]

BILLING CODE 4120–03–P

DEPARTMENT OF HEALTH AND HUMAN SERVICES

National Institutes of Health

Center for Scientific Review; Notice of Closed Meetings

Pursuant to section 10(d) of the Federal Advisory Committee Act, as amended (5 U.S.C. Appendix 2), notice is hereby given of the following meetings.

The meetings will be closed to the public in accordance with the provisions set forth in sections 552b(c)(4) and 552b(c)(6), Title 5 U.S.C., as amended. The grant applications and the discussions could disclose confidential trade secrets or commercial property such as patentable material, and personal information concerning individuals associated with the grant applications, the disclosure of which would constitute a clearly unwarranted invasion of personal privacy.

Name of Committee: Bioengineering Sciences & Technologies; Integrated Review Group Instrumentation and Systems Development Study Section.
Date: January 20–21, 2009.
Time: 7 p.m. to 5 p.m.
Agenda: To review and evaluate grant applications.
Place: Hotel Kabuki, 1625 Post Street, San Francisco, CA 94155.
Contact Person: Marc Rigas, PhD, Scientific Review Officer, Center for Scientific Review, National Institutes of Health, 6701 Rockledge Drive, Room 5158, MSC 7849, Bethesda, MD 20892, 301–402–1074, *rigasm@mail.nih.gov*.

Name of Committee: Center for Scientific Review Special Emphasis Panel; Research on Ethical Issues in Human Studies.
Date: January 22, 2009.
Time: 12 p.m. to 4 p.m.
Agenda: To review and evaluate grant applications.
Place: National Institutes of Health, 6701 Rockledge Drive, Bethesda, MD 20892, (Virtual Meeting).
Contact Person: Ellen K. Schwartz, EDD, Scientific Review Officer, Center for Scientific Review, National Institutes of Health, 6701 Rockledge Drive, Room 3168, MSC 7770, Bethesda, MD 20892, 301–435–0681, *schwarte@csr.nih.gov*.

Name of Committee: Center for Scientific Review Special Emphasis Panel; Platelet Biology.
Date: January 26, 2009.
Time: 2 p.m. to 4 p.m.
Agenda: To review and evaluate grant applications.
Place: National Institutes of Health, 6701 Rockledge Drive, Bethesda, MD 20892, (Telephone Conference Call).
Contact Person: Manjit Hanspal, PhD, Scientific Review Officer, Center for Scientific Review, National Institutes of Health, 6701 Rockledge Drive, Room 4138, MSC 7804, Bethesda, MD 20892, 301–435–1195, *hanspalm@csr.nih.gov*.

Name of Committee: Bioengineering Sciences & Technologies Integrated Review Group; Nanotechnology Study Section.
Date: January 28–29, 2009.
Time: 8:30 a.m. to 5:30 p.m.
Agenda: To review and evaluate grant applications.
Place: Hilton Alexandria Old Town, 1767 King Street, Alexandria, VA 22314.
Contact Person: Joseph D. Mosca, PhD, Scientific Review Officer, Center for Scientific Review, National Institutes of Health, 6701 Rockledge Drive, Room 5158, MSC 7808, Bethesda, MD 20892, (301) 435–2344, *moscajos@csr.nih.gov*.

Name of Committee: Molecular, Cellular and Developmental Neuroscience Integrated Review Group; Biophysics of Neural Systems Study Section.
Date: January 29, 2009.
Time: 8 a.m. to 8 p.m.
Agenda: To review and evaluate grant applications.
Place: Fairmont Hotel, 2401 M Street, NW., Washington, DC 20037.
Contact Person: Geoffrey G. Schofield, PhD, Scientific Review Officer, Center for Scientific Review, National Institutes of Health, 6701 Rockledge Drive, Room 4040–A, MSC 7850, Bethesda, MD 20892, 301–435–1235, *geoffreys@csr.nih.gov*.

Name of Committee: Brain Disorders and Clinical Neuroscience Integrated Review Group; Clinical Neuroscience and Neurodegeneration Study Section.
Date: January 29, 2009.
Time: 8 a.m. to 5 p.m.
Agenda: To review and evaluate grant applications.
Place: Mark Hopkins San Francisco Hotel, One Nob Hill, San Francisco, CA 94108.
Contact Person: Rene Etcheberrigaray, MD, Scientific Review Officer, Center for Scientific Review, National Institutes of Health, 6701 Rockledge Drive, Room 5196, MSC 7846, Bethesda, MD 20892, (301) 435–1246, *etcheber@csr.nih.gov*.

Name of Committee: Oncological Sciences Integrated Review Group; Cancer Biomarkers Study Section.
Date: February 3–4, 2009.
Time: 8 a.m. to 5 p.m.
Agenda: To review and evaluate grant applications.
Place: Holiday Inn Georgetown, 2101 Wisconsin Avenue, NW., Washington, DC 20007.
Contact Person: Steven B. Scholnick, PhD, Scientific Review Officer, Center for Scientific Review, National Institutes of Health, 6701 Rockledge Drive, Room 6152, MSC 7804, Bethesda, MD 20892, 301–435–1719, *scholnis@csr.nih.gov*.

Name of Committee: Genes, Genomes, and Genetics Integrated Review Group; Genomics, Computational Biology and Technology Study Section.
Date: February 3–4, 2009.
Time: 8:30 a.m. to 5 p.m.
Agenda: To review and evaluate grant applications.
Place: Hyatt Regency Bethesda, One Bethesda Metro Center, 7400 Wisconsin Avenue, Bethesda, MD 20814.
Contact Person: Barbara J. Thomas, PhD, Scientific Review Officer, Center for Scientific Review, National Institutes of Health, 6701 Rockledge Drive, Room 2218, MSC 7890, Bethesda, MD 20892, 301–435–0603, *bthomas@csr.nih.gov*.

Name of Committee: Center for Scientific Review Special Emphasis Panel; Member Conflict: Mechanisms of Cancer Prevention.
Date: February 3, 2009.
Time: 1 p.m. to 3 p.m.
Agenda: To review and evaluate grant applications.
Place: National Institutes of Health, 6701 Rockledge Drive, Bethesda, MD 20892, (Telephone Conference Call).
Contact Person: Zhiqiang Zou, MD, PhD, Scientific Review Officer, Center for Scientific Review, National Institutes of Health, 6701 Rockledge Drive, Room 6190, MSC 7804, Bethesda, MD 20892, 301–451–0132, *zouzhiq@csr.nih.gov*.

Name of Committee: Digestive Sciences Integrated Review Group; Xenobiotic and Nutrient Disposition and Action Study Section.
Date: February 4, 2009.
Time: 8 a.m. to 6 p.m.
Agenda: To review and evaluate grant applications.
Place: Hyatt Regency Bethesda, One Bethesda Metro Center, 7400 Wisconsin Avenue, Bethesda, MD 20814.
Contact Person: Patricia Greenwel, PhD, Scientific Review Officer, Center for Scientific Review, National Institutes of Health, 6701 Rockledge Drive, Room 2172, MSC 7818, Bethesda, MD 20892, 301–435–1169, *greenwep@csr.nih.gov*.

Name of Committee: Health of the Population Integrated Review Group; Kidney, Nutrition, Obesity and Diabetes Study Section.
Date: February 4–5, 2009.
Time: 8 a.m. to 11 a.m.
Agenda: To review and evaluate grant applications.
Place: Bahia Resort Hotel, 998 W. Mission Bay Drive, San Diego, CA 92109.
Contact Person: Fungai F. Chanetsa, PhD, Scientific Review Officer, Center for Scientific Review, National Institutes of Health, 6701 Rockledge Drive, Room 3135, MSC 7770, Bethesda, MD 20892, 301–435–1262, *chanetsaf@csr.nih.gov*.

Name of Committee: Bioengineering Sciences & Technologies Integrated Review Group; Gene and Drug Delivery Systems Study Section.
Date: February 4–5, 2009.
Time: 8 a.m. to 5 p.m.
Agenda: To review and evaluate grant applications.
Place: Sir Francis Drake Hotel, 450 Powell Street, San Francisco, CA 94102.
Contact Person: Steven J. Zullo, PhD, Scientific Review Officer, Center for

Scientific Review, National Institutes of Health, 6701 Rockledge Drive, Room 5146, MSC 7849, Bethesda, MD 20892, 301–435–2810, *zullost@csr.nih.gov*.

(Catalogue of Federal Domestic Assistance Program Nos. 93.306, Comparative Medicine; 93.333, Clinical Research, 93.306, 93.333, 93.337, 93.393–93.396, 93.837–93.844, 93.846–93.878, 93.892, 93.893, National Institutes of Health, HHS)

Dated: December 18, 2008.

Jennifer Spaeth,

Director, Office of Federal Advisory Committee Policy.

[FR Doc. E8–30725 Filed 12–30–08; 8:45 am]

BILLING CODE 4140–01–M

DEPARTMENT OF HEALTH AND HUMAN SERVICES

National Institutes of Health

Eunice Kennedy Shriver National Institute of Child Health & Human Development; Notice of Meeting

Pursuant to section 10(a) of the Federal Advisory Committee Act, as amended (5 U.S.C. Appendix 2), notice is hereby given of a meeting of the National Advisory Child Health and Human Development Council.

The meeting will be open to the public, with attendance limited to space available. Individuals who plan to attend and need special assistance, such as sign language interpretation or other reasonable accommodations, should notify the Contact Person listed below in advance of the meeting.

Name of Committee: National Advisory Child Health and Human Development Council; NACHHD Subcommittee on Planning and Policy.

Date: January 8, 2009.

Time: 12 p.m. to 1 p.m.

Agenda: Topics to be discussed include: (1) Report of the Director; (2) Budget Updates; (3) Legislative Updates.

Place: National Institutes of Health Building 31, 31 Center Drive, Room 2A–03, Bethesda, MD 20892, (Telephone Conference Call).

Contact Person: Elizabeth Wehr, Senior Public Health Analyst, Office of Science Policy, Analysis and Communication, NICHD/NIH/DHHS, 31 Center Drive, Suite 2A–18, Bethesda, MD 20892, 301–496–0805.

Information is also available on the Institute's/Center's home page: *http://www.nichd.nih.gov/about/nachhd.htm,* where an agenda and any additional information for the meeting will be posted when available.

(Catalogue of Federal Domestic Assistance Program Nos. 93.864, Population Research; 93.865, Research for Mothers and Children; 93929, Center for Medical Rehabilitation Research; 93.209, Contraception and Infertility Loan Repayment Program, National Institutes of Health, HHS)

Dated: December 22, 2008.

Jennifer Spaeth,

Director, Office of Federal Advisory Committee Policy.

[FR Doc. E8–30853 Filed 12–30–08; 8:45 am]

BILLING CODE 4140–01–M

DEPARTMENT OF HEALTH AND HUMAN SERVICES

National Institutes of Health

National Library of Medicine; Notice of Meeting

Pursuant to section 10(d) of the Federal Advisory Committee Act, as amended (5 U.S.C. Appendix 2), notice is hereby given of a meeting of the Board of Scientific Counselors, National Center for Biotechnology Information.

The meeting will be open to the public as indicated below, with attendance limited to space available. Individuals who plan to attend and need special assistance, such as sign language interpretation or other reasonable accommodations, should notify the Contact Person listed below in advance of the meeting.

The meeting will be closed to the public as indicated below in accordance with the provisions set forth in section 552b(c)(6), Title 5 U.S.C., as amended for the review, discussion, and evaluation of individual other conducted by the National Library of Medicine, including consideration of personnel qualifications and performance, and the competence of individual investigators, the disclosure of which would constitute a clearly unwarranted invasion of personal privacy.

Name of Committee: Board of Scientific Counselors, National Center for Biotechnology Information.

Date: April 28, 2009.

Open: 8:30 a.m. to 12 p.m.

Agenda: Program Discussion.

Place: National Library of Medicine, Building 38, 2nd Floor, Board Room, 8600 Rockville Pike, Bethesda, MD 20892.

Closed: 12 p.m. to 2 p.m.

Agenda: To review and evaluate personal qualifications and performance, and competence of individual investigators.

Place: National Library of Medicine, Building 38, 2nd Floor, Board Room, 8600 Rockville Pike, Bethesda, MD 20892.

Open: 2 p.m. to 3 p.m.

Agenda: Program Discussion.

Place: National Library of Medicine, Building 38, 2nd Floor, Board Room, 8600 Rockville Pike, Bethesda, MD 20892.

Contact Person: David J. Lipman, MD., Director, Natl Ctr For Biotechnology Information, National Library of Medicine, Department of Health and Human Services, Building 38A, Room 8N805, Bethesda, MD 20894, 301–435–5985, *dlipman@mail.nih.gov.*

Any interested person may file written comments with the committee by forwarding the statement to the Contact Person listed on this notice. The statement should include the name, address, telephone number and when applicable, the business or professional affiliation of the interested person.

In the interest of security, NIH has instituted stringent procedures for entrance onto the NIH campus. All visitor vehicles, including taxicabs, hotel, and airport shuttles will be inspected before being allowed on campus. Visitors will be asked to show one form of identification (for example, a government-issued photo ID, driver's license, or passport) and to state the purpose of their visit.

(Catalogue of Federal Domestic Assistance Program Nos. 93.879, Medical Library Assistance, National Institutes of Health, HHS)

Dated: December 18, 2008.

Jennifer Spaeth,

Director, Office of Federal Advisory Committee Policy.

[FR Doc. E8–30722 Filed 12–30–08; 8:45 am]

BILLING CODE 4140–01–M

DEPARTMENT OF HOMELAND SECURITY

Coast Guard

[Docket No. USCG–2008–0333]

Delaware River and Bay Oil Spill Advisory Committee; Meeting

AGENCY: Coast Guard, DHS.

ACTION: Notice of meeting.

SUMMARY: The Delaware River and Bay Oil Spill Advisory Committee (DRBOSAC) will hold an administrative meeting in Philadelphia, PA to discuss various issues to improve oil spill prevention and response strategies for the Delaware River and Bay. During the meeting, the items concerning the Committee's organization and action items will be discussed. This meeting will be open to the public.

DATES: The Committee will meet on Wednesday, January 21, 2009, from 10 a.m. to 1 p.m. Written material should reach the Coast Guard on or before January 14, 2009.

ADDRESSES: The Committee will meet at Coast Guard Sector Delaware Bay, 1 Washington Ave., Philadelphia, PA 19147. Send written material to Gerald Conrad, liaison to the Designated Federal Officer (DFO) of the DRBOSAC, at the address above. This notice and any documents identified in the **SUPPLEMENTARY INFORMATION** section as being available in the docket may be viewed online, at *http://*

www.regulations.gov, using docket number USCG–2008–0333.

FOR FURTHER INFORMATION CONTACT: Gerald Conrad, liaison to the DFO of the DRBOSAC, telephone 215–271–4824.

SUPPLEMENTARY INFORMATION: Notice of this meeting is given under the Federal Advisory Committee Act, 5 U.S.C. App. (Pub. L. 92–463).

Agenda of the Meeting

The agenda for the meeting will be as follows:

(1) Opening comments.
(2) Introduction.
(3) Review of committee timeline and milestones.
(4) Prioritization of final report topics (under development).
(5) Establishment and purpose of sub-committees.
(6) Future Committee business.
(7) Closing.

More information and detail on the meeting will be available at the committee Web site, located at *http://www.uscg.mil/d5/sectDelawarebay/DRBOSAC.asp.* Additional detail may be added to the agenda up to January 14, 2009.

Procedural

This meeting will be open to the public. All persons entering the building will have to present identification and may be subject to screening. Please note that the meeting may close early if all business is finished.

The public will not be able to make oral presentations during the meeting. The public may file written statements with the committee; written material should reach the Coast Guard no later than January 14, 2009. If you would like a copy of your material distributed to each member of the committee in advance of the meeting, please submit 35 copies to the liaison to the DFO no later than January 14, 2009.

Please register your attendance with the liaison to the DFO no later than January 14, 2009.

Information on Services for Individuals With Disabilities

For information on facilities, or services for individuals with disabilities, or to request special assistance at the meeting, contact the Liaison to the DFO as soon as possible.

Dated: December 19, 2008.

David L. Scott,

Captain, U.S. Coast Guard, Commander, Sector Delaware Bay, Designated Federal Officer.

[FR Doc. E8–31123 Filed 12–30–08; 8:45 am]

BILLING CODE 4910–15–P

DEPARTMENT OF HOMELAND SECURITY

Coast Guard

[Docket No. USCG–2008–1172]

Houston/Galveston Navigation Safety Advisory Committee

AGENCY: Coast Guard, DHS.

ACTION: Notice of meetings.

SUMMARY: The Houston/Galveston Navigation Safety Advisory Committee (HOGANSAC) and its working groups will meet in Houston, Texas to discuss waterway improvements, aids to navigation, area projects impacting safety on the Houston Ship Channel, and various other navigation safety matters in the Galveston Bay area. All meetings will be open to the public.

DATES: The Committee will meet on Thursday, February 5, 2009 from 9 a.m. to 12 p.m. The Committee's working groups will meet on Thursday, January 22, 2009 from 9 a.m. to 12 p.m. These meetings may close early if all business is finished. Written material and requests to make oral presentations should reach the Coast Guard on or before January 29, 2009. Requests to have a copy of your materials distributed to each member of the committee or working group should reach the Coast Guard on or before January 22, 2009.

ADDRESSES: The full Committee will meet at Western Gulf Maritime Association (WGMA), 1717 East Loop, Suite 200, Houston, Texas 77029, (713) 678–7655. The working group meeting will be held at same location above. Send written material and requests to make oral presentations to Lieutenant Sean Hughes, Assistant to the Executive Secretary of HOGANSAC, 9640 Clinton Drive, Houston, Texas 77029. This notice is available in our online docket, USCG–2008–1172, at *http://www.regulations.gov.*

FOR FURTHER INFORMATION CONTACT: Commander Hal R. Pitts, Executive Secretary of HOGANSAC, telephone (713) 671–5164, e-mail *hal.r.pitts@uscg.mil* or Lieutenant Sean Hughes, Assistant to the Executive Secretary of HOGANSAC, telephone (713) 678–9001, e-mail *sean.p.hughes@uscg.mil.*

SUPPLEMENTARY INFORMATION: Notice of these meetings is given pursuant to the Federal Advisory Committee Act, 5 U.S.C. App. (Pub. L. 92–463).

Agendas of the Meetings

Houston/Galveston Navigation Safety Advisory Committee (HOGANSAC). The tentative agenda is as follows:

(1) Opening remarks by the Committee Sponsor (RADM Whitehead) or the Committee Sponsor's representative, Executive Director (CAPT Diehl) and Chairperson (Ms. Tava Foret).
(2) Approval of the May 22, 2008 minutes.
(3) Old Business:
(a) Navigation Operations (NAVOPS)/Maritime Incident Review subcommittee report;
(b) Dredging subcommittee report;
(c) Technology subcommittee report;
(d) Waterways Optimization subcommittee report;
(e) HOGANSAC Outreach subcommittee report;
(f) Commercial Recovery Contingency (CRC) subcommittee report;
(g) Area Maritime Security Committee (AMSC) Liaison's report.
(4) New Business:
(a) State of the Waterway Address—CDR Hal R. Pitts;
(b) Homeport 101—LT Sean Hughes;
(c) Transportation Workers Identification Card (TWIC) Update/Status—LT Sarah Hayes.

Working Groups Meeting. The tentative agenda for the working groups meeting is as follows:

(1) Presentation by each working group of its accomplishments and plans for the future;
(2) Review and discuss the work completed by each working group;
(3) Put forth any action items for consideration at full committee meeting.

Procedural

Both meetings are open to the public. Please note that meetings may close early if all business is finished. At the Chairs' discretion, members of the public may make oral presentations during the meetings. If you would like to make an oral presentation at a meeting, please notify the Coast Guard no later than January 29, 2009. Written material for distribution at a meeting should reach the Coast Guard no later than January 22, 2009. If you would like a copy of your material distributed to each member of the committee in advance of the meetings, please submit 19 copies to the Coast Guard no later than January 22, 2009.

Information on Services for Individuals With Disabilities

For information on facilities or services for individuals with disabilities or to request special assistance at the

meetings, contact the Executive Secretary or Assistant to the Executive Secretary as soon as possible.

Dated: December 10, 2008.

J.R. Whitehead,

Commander, 8th Coast Guard District.

[FR Doc. E8–31124 Filed 12–30–08; 8:45 am]

BILLING CODE 4910–15–P

DEPARTMENT OF HOMELAND SECURITY

U.S. Citizenship and Immigration Services

Agency Information Collection Activities: Form G–646, Revision of a Currently Approved Information Collection; Comment Request

ACTION: 30-Day Notice of Information Collection Under Review: Form G–646, Sworn Statement of Refugee Applying for Admission to the United States; OMB Control No. 1615–0097.

The Department of Homeland Security, U.S. Citizenship and Immigration Services (USCIS) has submitted the following information collection request to the Office of Management and Budget (OMB) for review and clearance in accordance with the Paperwork Reduction Act of 1995. The information collection was previously published in the **Federal Register** on August 27, 2008, at 73 FR 50633 allowing for a 60-day public comment period. USCIS did not receive any comments for this information collection.

The purpose of this notice is to allow an additional 30 days for public comments. Comments are encouraged and will be accepted until January 30, 2009. This process is conducted in accordance with 5 CFR 1320.10.

Written comments and/or suggestions regarding the item(s) contained in this notice, especially regarding the estimated public burden and associated response time, should be directed to the Department of Homeland Security (DHS), and to the Office of Information and Regulatory Affairs, Office of Management and Budget (OMB), USCIS Desk Officer. Comments may be submitted to: USCIS, Chief, Regulatory Management Division, Clearance Office, 111 Massachusetts Avenue, Suite 3008, Washington, DC 20529–2210. Comments may also be submitted to DHS via facsimile to 202–272–8352 or via e-mail at *rfs.regs@dhs.gov,* and to the OMB USCIS Desk Officer via facsimile at 202–395–6974 or via e-mail at *oira_submission@omb.eop.gov* .

When submitting comments by e-mail please make sure to add OMB Control Number 1615–0097 in the subject box. Written comments and suggestions from the public and affected agencies should address one or more of the following four points:

Overview of this information collection:

(1) *Type of Information Collection:* Revision of a currently approved information collection.

(2) *Title of the Form/Collection:* Sworn Statement of Refugee Applying for Admission into the United States.

(3) *Agency form number, if any, and the applicable component sponsoring the collection:* Form G–646, U.S. Citizenship and Immigration Services.

(4) *Affected public who will be asked or required to respond, as well as a brief abstract: Primary:* Individuals or households. The data collected on this form is used by the DHS to determine eligibility for the admission of applicants to the United States as refugees.

(5) *An estimate of the total number of respondents and the amount of time estimated for an average respondent to respond:* 75,000 responses at 20 minutes (.333 hours) per response.

(6) *An estimate of the total public burden (in hours) associated with the collection:* 24,975 annual burden hours.

If you have additional comments, suggestions, or need a copy of the information collection instrument, please visit the USCIS Web site at: *http://www.regulations.gov/.*

We may also be contacted at: USCIS, Regulatory Management Division, 111 Massachusetts Avenue, NW., Suite 3008, Washington, DC 20529–2210, Telephone number 202–272–8377.

Dated: December 24, 2008.

Stephen Tarragon,

Deputy Chief, Regulatory Management Division, U.S. Citizenship and Immigration Services, Department of Homeland Security.

[FR Doc. E8–31138 Filed 12–30–08; 8:45 am]

BILLING CODE 9111–97–P

DEPARTMENT OF HOUSING AND URBAN DEVELOPMENT

[Docket No. FR–5186–N–53]

Federal Property Suitable as Facilities To Assist the Homeless

AGENCY: Office of the Assistant Secretary for Community Planning and Development, HUD.

ACTION: Notice.

SUMMARY: This Notice identifies unutilized, underutilized, excess, and surplus Federal property reviewed by HUD for suitability for possible use to assist the homeless.

DATES: *Effective Date:* December 31, 2008.

FOR FURTHER INFORMATION CONTACT: Kathy Ezzell, Department of Housing and Urban Development, 451 Seventh Street, SW., Room 7262, Washington, DC 20410; telephone (202) 708–1234; TTY number for the hearing- and speech-impaired (202) 708–2565, (these telephone numbers are not toll-free), or call the toll-free Title V information line at 800–927–7588.

SUPPLEMENTARY INFORMATION: In accordance with the December 12, 1988 court order in *National Coalition for the Homeless* v. *Veterans Administration,* No. 88–2503–OG (D.D.C.), HUD publishes a Notice, on a weekly basis, identifying unutilized, underutilized, excess and surplus Federal buildings and real property that HUD has reviewed for suitability for use to assist the homeless. Today's Notice is for the purpose of announcing that no additional properties have been determined suitable or unsuitable this week.

Dated: December 23, 2008.

Mark R. Johnston,

Deputy Assistant Secretary for Special Needs.

[FR Doc. E8–31059 Filed 12–30–08; 8:45 am]

BILLING CODE 4210–67–P

DEPARTMENT OF THE INTERIOR

Fish and Wildlife Service

[FWS–R2–ES–2008–N0316; 20124–1113–0000–F5]

Endangered and Threatened Species Permit Applications

AGENCY: Fish and Wildlife Service, Interior.

ACTION: Notice of receipt of applications.

SUMMARY: The following applicants have applied for scientific research permits to conduct certain activities with endangered species under the Endangered Species Act of 1973, as amended (Act).

DATES: To ensure consideration, written comments must be received on or before January 30, 2009.

ADDRESSES: Written comments should be submitted to the Chief, Endangered Species Division, Ecological Services, P.O. Box 1306, Room 6034, Albuquerque, New Mexico 87103. Documents and other information submitted with these applications are available for review, subject to the

requirements of the Privacy Act and Freedom of Information Act. Documents will be available for public inspection, by appointment only, during normal business hours at the U.S. Fish and Wildlife Service, 500 Gold Ave., SW., Room 6034, Albuquerque, New Mexico. Please refer to the respective permit number for each application when submitting comments.

FOR FURTHER INFORMATION CONTACT: Susan Jacobsen, Chief, Endangered Species Division, P.O. Box 1306, Room 4102, Albuquerque, New Mexico 87103, (505) 248–6920.

SUPPLEMENTARY INFORMATION:

Public Availability of Comments

Before including your address, phone number, e-mail address, or other personal identifying information in your comment, you should be aware that your entire comment—including your personal identifying information—may be made publicly available at any time. While you can ask us in your comment to withhold your personal identifying information from public review, we cannot guarantee that we will be able to do so.

Permit TE–819477

Applicant: Parametrix, Albuquerque, New Mexico.

Applicant requests an amendment to a current permit for research and recovery purposes to conduct presence/absence surveys of the following species: Rio Grande silvery minnow (*Hybognathus amarus*), lesser long-nosed bat (*Leptonycteris yerbabuenae*), Mexican long-nosed bat (*Leptonycteris nivalis*), and Pima pineapple cactus (*Coryphantha robustispina*) within New Mexico and Arizona.

Permit TE–195991

Applicant: Bonnie Doggett, Austin, Texas.

Applicant requests a new permit for research and recovery purposes to conduct presence/absence surveys of golden-cheeked warbler (*Dendroica chrysoparia*) within Texas.

Permit TE–198059

Applicant: Christopher Taylor, Plano, Texas.

Applicant requests a new permit for research and recovery purposes to conduct presence/absence surveys of the following species: Northern aplomado falcon (*Falco femeralis*), black-capped vireo (*Vireo atricapilla*), and golden-cheeked warbler (*Dendroica chrysoparia*) within Arizona, Texas, and New Mexico.

Permit TE–198057

Applicant: Blackbird Environmental, LLC, Norman, Oklahoma.

Applicant requests a new permit for research and recovery purposes to conduct presence/absence surveys of American burying beetle (*Nicrophorus americanus*) within Texas, Oklahoma, and Arkansas.

Permit TE–195191

Applicant: Baer Engineering and Environmental Consultants, Inc., Austin, Texas.

Applicant requests a new permit for research and recovery purposes to conduct presence/absence surveys of black-capped vireo (*Vireo atricapilla*) and golden-cheeked warbler (*Dendroica chrysoparia*) within Texas.

Authority: 16 U.S.C. 1531 *et seq.*

Dated: December 4, 2008.

Thomas L. Nauer,

Regional Director, Southwest Region, Fish and Wildlife Service.

[FR Doc. E8–31119 Filed 12–30–08; 8:45 am]

BILLING CODE 4310–55–P

DEPARTMENT OF THE INTERIOR

Fish and Wildlife Service

[FWS–R4–R–2008–N0245; 40136–1265–0000–S3]

Mattamuskeet National Wildlife Refuge, Hyde County, NC

AGENCY: Fish and Wildlife Service, Department of the Interior.

ACTION: Notice of availability: Final comprehensive conservation plan and finding of no significant impact.

SUMMARY: We, the Fish and Wildlife Service (Service), announce the availability of our final comprehensive conservation plan (CCP) and finding of no significant impact (FONSI) for Mattamuskeet National Wildlife Refuge (NWR). In the final CCP, we describe how we will manage this refuge for the next 15 years.

ADDRESSES: A copy of the CCP may be obtained by writing to: Mr. Bruce Freske, Refuge Manager, Mattamuskeet NWR, 38 Mattamuskeet Road, Swan Quarter, NC 27885. The CCP may also be accessed and downloaded from the Service's Internet site: *http://southeast.fws.gov/planning.*

FOR FURTHER INFORMATION CONTACT: Mr. Bruce Freske, Refuge Manager, Mattamuskeet NWR; Telephone: 252/926–4021; fax: 252/926–1743; e-mail: *bruce_freske@fws.gov.*

SUPPLEMENTARY INFORMATION:

Introduction

With this notice, we finalize the CCP process for Mattamuskeet NWR. We started this process through a notice in the **Federal Register** on February 7, 2001 (66 FR 9353). For more about the process, see that notice.

Mattamuskeet NWR was established in 1934, and conserves 50,180 acres of habitats around Lake Mattamuskeet, including the lake itself. At 40,000 acres, Lake Mattamuskeet is North Carolina's largest natural lake. The refuge supports significant wintering populations of ducks, Canada geese, snow geese, and tundra swans. Concentrations of bald eagles and other raptors, wading birds, and shorebirds occur seasonally. Significant fishery resources including largemouth bass, sunfish (bream), white perch, crappie, alewives (herring), and blue crabs are associated with Lake Mattamuskeet and canals. Habitats consist of open water (40,000 acres), freshwater marsh (3,640 acres), forested wetlands (3,503 acres), managed wetlands or impoundments (2,600 acres), croplands (400 acres), and forested uplands/administrative lands (37 acres).

Popular recreation uses at Mattamuskeet NWR include hunting, sport fishing, and wildlife observation and photography. Quota hunting for white-tailed deer and waterfowl is allowed on portions of the refuge. The Service selects hunters through a random drawing of applicants for deer and resident goose hunting. The State of North Carolina receives application requests for waterfowl hunting on the refuge through their special hunts program. Hunting for white-tailed deer and resident Canada geese is primarily conducted to control population levels.

Mattamuskeet NWR receives 18,000 anglers annually. Most people fish along canal banks, bridges, or the Highway 94 Causeway. Boaters mostly use the lake in the spring and fall when water depths in the shallow lake are generally the highest. Boat fishermen generally seek largemouth and striped bass, while bank fishermen mostly seek catfish, white perch, and crappie. Crappie fishing is especially popular in the spring when spawning fish move into the deeper canals attached to the lake.

During the fall and winter, concentrations of Canada geese, tundra swans, and ducks of many species delight both wildlife observers and photographers. The formerly threatened bald eagle may also be observed during the fall, winter, and early spring. During the summer months, many species of songbirds and marsh birds are a common sight. Occasionally, broods of

black and wood ducks can be observed in the canals and around the lake's edge. Osprey, wood duck, and bald eagle nests are occasionally visible. Year-round residents include the white-tailed deer, marsh and cottontail rabbits, gray squirrels, and many other mammals, as well as amphibians and reptiles. Species less observed are the bobcat and river otter. The black bear population in northeastern North Carolina is one of the largest on the east coast and lucky visitors to the refuge occasionally glimpse a wild bear.

We announce our decision and the availability of the final CCP and FONSI for Mattamuskeet NWR in accordance with the National Environmental Policy Act (NEPA) (40 CFR 1506.6(b)) requirements. We completed a thorough analysis of impacts on the human environment, which we included in the draft comprehensive conservation plan and environmental assessment (Draft CCP/EA).

The CCP will guide us in managing and administering Mattamuskeet NWR for the next 15 years. Alternative B, as we described, is the foundation for the CCP.

The compatibility determinations for (1) Animal control; (2) bicycling, jogging, walking, walking dogs, horseback riding; (3) boating—power boats; (4) boating—non-motorized; (5) dredge or fill; (6) environmental education and interpretation; (7) farming; (8) fishing—recreational and tournament; (9) fishing—guided; (10) hunting—big game; (11) hunting—waterfowl; (12) photography; (13) photography—commercial; (14) small public gatherings; (15) research; (16) tree harvest—firewood—other; and (17) wildlife observation—guiding or outfitting, are also available in the CCP.

Background

The National Wildlife Refuge System Improvement Act of 1997 (16 U.S.C. 668dd–668ee) (Improvement Act), which amended the National Wildlife Refuge System Administration Act of 1966, requires us to develop a CCP for each national wildlife refuge. The purpose for developing a CCP is to provide refuge managers with a 15-year plan for achieving refuge purposes and contributing toward the mission of the National Wildlife Refuge System, consistent with sound principles of fish and wildlife management, conservation, legal mandates, and our policies. In addition to outlining broad management direction on conserving wildlife and their habitats, CCPs identify wildlife-dependent recreational opportunities available to the public, including opportunities for hunting, fishing, wildlife observation, wildlife photography, and environmental education and interpretation. We will review and update the CCP at least every 15 years in accordance with the Improvement Act.

Comments

Approximately 150 copies of the Draft CCP/EA were made available for a 30-day public review period as announced in the **Federal Register** on July 18, 2008 (73 FR 41371). Nineteen written comments were received from private citizens, four North Carolina state agencies, and the Hyde County Chamber of Commerce. Members of the public were broadly supportive of the proposed plan, although several commented that they would have preferred Alternative C, which would have expanded management, programs, visitor services, and public use even more than the alternative selected by the Service.

The four state agencies that commented were the North Carolina Office of Geospatial and Technology Management; Aquifer Protection Section, Washington Regional Office, North Carolina Department of Environment and Natural Resources; North Carolina Department of Environment and Natural Resources; and North Carolina Division of Coastal Management. Representatives of the North Carolina Wildlife Resources Commission participated in preparing the CCP but did not provide written comments on the Draft CCP/EA.

Selected Alternative

After considering the comments we received, we have selected Alternative B for implementation. This choice is reflected in the CCP. While each of the alternatives offered benefits for wildlife, habitat, and public use, Alternative B was more ambitious than Alternative A and more feasible and realistic than Alternative C.

Alternative B provides an effective management action to meet the purposes of Mattamuskeet NWR by optimizing habitat management and visitor services. This long-term management plan enhances or slightly expands various aspects of current management. For wintering waterfowl, objectives for tundra swan and northern pintail are the same, but the Canada goose objective is 5,000 higher and the duck objective is 40,000 to 60,000 higher than current management. The CCP replicates most elements and expands upon other aspects of current fisheries management.

The CCP also expands upon current management of raptors, passerine birds, shorebirds, marsh and wading birds, mammals, and reptiles and amphibians. It re-initiates nest counts of ospreys, ground surveys for marsh and wading birds, and implements passerine point counts. Furthermore, the refuge will evaluate alternative management strategies for moist-soil units as to their benefit for spring and fall migration of shorebirds.

The CCP expands on current management's habitat objectives. It investigates the desirability and feasibility of restoring Salyer's Ridge pinewoods and considers new management options for the Conservation Reserve Program cropland. The CCP expands resource protection by increasing control of invasive plant and animal species such as common reed, alligatorweed, and nutria. The refuge will also prepare and begin to implement a Cultural Resources Management Plan. To enhance law enforcement, the refuge will add one full-time law enforcement officer dedicated solely to Mattamuskeet NWR.

To better support public use, the refuge will prepare and implement a Visitor Services' Plan. Existing hunts will continue and the refuge will explore how to increase youth hunting opportunities for deer and waterfowl and cooperate with North Carolina Wildlife Resources Commission to conduct activities promoting hunter recruitment and retention. Fishing opportunities will increase by adding one boat ramp to support an additional 5,000 angler visits annually. Nature Week will be re-instituted and the refuge will begin to host ten K–12 school programs annually. Interpretation opportunities will be expanded by adding kiosks, annually revised brochures, and interpretive signage along the wildlife drive and New Holland boardwalk trail. Opening and staffing the visitor contact station with volunteer(s) on weekends will also promote further interpretation. The refuge will reinstall an 8-mile canoe and kayak loop trail and construct one additional photo-blind. As under current management, the refuge will cooperate with partners to encourage commercial ecotours. Refuge management will also increase outreach.

Authority: This notice is published under the authority of the National Wildlife Refuge System Improvement Act of 1997, Public Law 105–57.

Dated: September 17, 2008.

Cynthia K. Dohner,

Acting Regional Director.

Editorial Note: This document was received in the Office of the Federal Register on December 24, 2008.

[FR Doc. E8–31120 Filed 12–30–08; 8:45 am]

BILLING CODE 4310–55–P

DEPARTMENT OF THE INTERIOR

Bureau of Land Management

[F–14824–A and F–14824–A2; AK–965–1410–KC–P]

Alaska Native Claims Selection

AGENCY: Bureau of Land Management, Interior.

ACTION: Notice of decision approving lands for conveyance.

SUMMARY: As required by 43 CFR 2650.7(d), notice is hereby given that an appealable decision approving lands for conveyance pursuant to the Alaska Native Claims Settlement Act will be issued to Kokarmuit Corporation. The lands are in the vicinity of Akiak, Alaska, and are located in:

Seward Meridian, Alaska

T. 9 N., R. 65 W.,
Sec. 19;
Secs. 25 to 28, inclusive;
Secs. 33 to 36, inclusive.
Containing approximately 5,575 acres.

T. 8 N., R. 66 W.,
Secs. 22, 23, and 24.
Containing approximately 1,747 acres.

T. 9 N., R. 66 W.,
Secs. 1, 2, and 3;
Secs. 11 to 14, inclusive;
Secs. 23 and 24.
Containing approximately 5,409 acres.

T. 10 N., R. 66 W.,
Secs. 3 and 10;
Secs. 15 and 22;
Secs. 27 and 34.
Containing approximately 3,126 acres.

T. 11 N., R. 67 W.,
Secs. 6, 8, and 9;
Secs. 14 to 19, inclusive;
Secs. 22 and 23;
Secs. 26 and 27;
Secs. 34 and 35.
Containing approximately 8,543 acres.

T. 11 N., R. 68 W.,
Secs. 12, 13, and 24.
Containing approximately 1,593 acres.
Aggregating approximately 25,993 acres.

The subsurface in these lands will be conveyed to Calista Corporation when the surface estate is conveyed to Kokarmuit Corporation. Notice of the decision will also be published four times in the Tundra Drums.

DATES: The time limits for filing an appeal are:

1. Any party claiming a property interest which is adversely affected by the decision shall have until January 30, 2009 to file an appeal.

2. Parties receiving service of the decision by certified mail shall have 30 days from the date of receipt to file an appeal.

Parties who do not file an appeal in accordance with the requirements of 43 CFR Part 4, Subpart E, shall be deemed to have waived their rights.

ADDRESSES: A copy of the decision may be obtained from: Bureau of Land Management, Alaska State Office, 222 West Seventh Avenue, #13, Anchorage, Alaska 99513–7504.

FOR FURTHER INFORMATION CONTACT: The Bureau of Land Management by phone at 907–271–5960, or by e-mail at *ak.blm.conveyance@ak.blm.gov*. Persons who use a telecommunication device (TTD) may call the Federal Information Relay Service (FIRS) at 1–800–877–8330, 24 hours a day, seven days a week, to contact the Bureau of Land Management.

Gina A. Kendall,

Land Law Examiner, Land Transfer Adjudication II.

[FR Doc. E8–31158 Filed 12–30–08; 8:45 am]

BILLING CODE 4310–JA–P

DEPARTMENT OF THE INTERIOR

Bureau of Land Management

[NM–920–1310–08); (OKNM 117608; OKNM 117609]

Proposed Reinstatement of Terminated Oil and Gas Leases OKNM 117608; OKNM 117609

AGENCY: Bureau of Land Management, Interior.

ACTION: Notice of reinstatement of terminated oil and gas leases.

SUMMARY: Pursuant to the provisions of 43 CFR 3108.2–3(b)(2), Capital Land Services, Inc. timely filed a petition for reinstatement of oil and gas leases OKNM 117608 and OKNM 117609 for lands in Woodward County, Oklahoma, and was accompanied by all required rentals and royalties accruing from March 1, 2008, the date of termination.

FOR FURTHER INFORMATION CONTACT: Becky C. Olivas, BLM, New Mexico State Office, (505) 438–7609.

SUPPLEMENTARY INFORMATION: No valid lease has been issued affecting the lands. The lessee has agreed to new lease terms for rentals and royalties at rates of $10.00 per acre or fraction thereof and 16⅔ percent, respectively. The lessee has paid the required $500.00 administrative fee and has reimbursed the Bureau of Land Management for the cost of this **Federal Register** notice. The lessee has met all the requirements for reinstatement of the leases as set out in Sections 31(d) and (e) of the Mineral Leasing Act of 1920 (30 U.S.C. 188), and the Bureau of Land Management is proposing to reinstate the leases effective March 1, 2008, subject to the original terms and conditions of the leases and the increased rentals and royalty rates cited above.

Dated: December 19, 2008.

Becky C. Olivas,

Land Law Examiner, Fluids Adjudication Team 1.

[FR Doc. E8–30772 Filed 12–30–08; 8:45 am]

BILLING CODE 4310–FB–P

DEPARTMENT OF THE INTERIOR

National Park Service

Native American Graves Protection and Repatriation Review Committee: Meeting

AGENCY: National Park Service, Interior.

ACTION: Notice.

Notice is here given in accordance with the Federal Advisory Committee Act, 5 U.S.C. Appendix (1988), of a meeting of the Native American Graves Protection and Repatriation Review Committee (Review Committee). The Review Committee will meet on May 23–24, 2009, at The Red Lion Hotel on Fifth Avenue, 1415 Fifth Avenue, Seattle, WA 98101. Meeting sessions will begin at 8:30 a.m. and end at 5 p.m. each day.

The agenda for the meeting includes an update on National NAGPRA Program activities during the first half of fiscal year 2009; activity reports from the National NAGPRA Program as requested by the Review Committee; requests for recommendations regarding the disposition of culturally unidentifiable human remains; disputes; presentations by Indian tribes, Native Hawaiian organizations, museums, Federal agencies, and the public; and the selection of dates and a site for the spring 2010 meeting.

A detailed agenda for this meeting will be posted on or before March 27, 2009, at *http://www.nps.gov/history/nagpra/*.

The Review Committee will consider the following requests: By anyone, to make a presentation; by museums and Federal agencies, to act on an agreement

concerning the disposition of human remains determined to be culturally unidentifiable (CUI); and by Indian tribes, Native Hawaiian organizations, lineal descendants, museums, and Federal agencies, to facilitate a dispute and make findings of fact and recommendations related to the identity, cultural affiliation, and/or return of human remains and other cultural items.

Requests to make a presentation must include an abstract of the presentation and contact information for the presenter(s).

Requests to act on a CUI agreement should be made on the form posted on the National NAGPRA Program Web site, and also should include all the materials requested on the form. To access and download the form, go to *http://www.nps.gov/history/nagpra;* then click on ''Review Committee;'' then click on ''Procedures;'' then, under ''Request by a Museum/Federal Agency for a CUI Disposition Agreement,'' click on the highlighted word ''form.'' Requests to consider a dispute should include—

a. A statement outlining the relevant facts of the dispute, including citations of applicable portions of NAGPRA and NAGPRA regulations.

b. Copies of any primary documents that are directly relevant to the issues in dispute, including, but not limited to, field notes, catalog records, consultation documents, relevant studies, and other pertinent data.

c. A statement describing the requesting party's interpretation of the facts.

d. A statement identifying all interested parties and describing the requesting party's understanding of the other party's/parties' interpretation of the facts.

e. A summary of the consultation record.

f. A statement of previous efforts to resolve the dispute, including, where applicable, the results of alternative dispute resolution efforts.

g. Proposed solutions.

The Review Committee will consider requests received on or before February 23, 2009. Send requests to: Designated Federal Officer, NAGPRA Review Committee, National Park Service, National NAGPRA Program, 1201 Eye Street, NW., 8th Floor (2253), Washington, DC 20005.

The transcript of the May Review Committee meeting will be available, on request, approximately ten weeks after the meeting. For a transcript, contact the Designated Federal Officer, at *David_Tarler@nps.gov*. Information about NAGPRA, the Review Committee, and Review Committee meetings is available at the National NAGPRA Program Web site, *http://www.nps.gov/history/nagpra/*. For the Review Committee's meeting procedures, click on ''Review Committee,'' then click on ''Procedures.''

The Review Committee was established by Section 8 of Native American Graves Protection and Repatriation Act of 1990 (NAGPRA), 25 U.S.C. 3006. Review Committee members are appointed by the Secretary of the Interior. The Review Committee is responsible for monitoring the NAGPRA inventory and identification process; reviewing and making findings related to the identity or cultural affiliation of cultural items, or the return of such items; facilitating the resolution of disputes; compiling an inventory of culturally unidentifiable human remains that are in the possession or control of each Federal agency and museum, and recommending specific actions for developing a process for disposition of such human remains; consulting with Indian tribes and Native Hawaiian organizations and museums on matters affecting such tribes or organizations lying within the scope of work of the Committee; consulting with the Secretary of the Interior on the development of regulations to carry out NAGPRA; and making recommendations regarding future care of repatriated cultural items. The Review Committee's work is carried out during the course of meetings that are open to the public.

Dated: November 21, 2008.

David Tarler,

Designated Federal Officer, Native American Graves Protection and Repatriation Review Committee.

[FR Doc. E8–30902 Filed 12–30–08; 8:45 am]

BILLING CODE 4310–70–M

DEPARTMENT OF THE INTERIOR

National Park Service

National Register of Historic Places; Weekly Listing of Historic Properties

Pursuant to (36 CFR 60.13(b,c)) and (36 CFR 63.5), this notice, through publication of the information included herein, is to appraise the public as well as governmental agencies, associations and all other organizations and individuals interested in historic preservation, of the properties added to, or determined eligible for listing in, the National Register of Historic Places from November 17 to November 21, 2008.

For further information, please contact Edson Beall via: United States Postal Service mail, at the National Register of Historic Places, 2280, National Park Service, 1849 C St., NW., Washington, DC 20240; in person (by appointment), 1201 Eye St. NW., 8th floor, Washington, DC 20005; by fax, 202–371–2229; by phone, 202–354–2255; or by e-mail, *Edson_Beall@nps.gov*.

Dated: December 22, 2008.

J. Paul Loether,

Chief, National Register of Historic Places/National Historic Landmarks Program.

KEY: State, County, Property Name, Address/Boundary, City, Vicinity, Reference Number, NHL, Action, Date, Multiple Name

DISTRICT OF COLUMBIA

District of Columbia State Equivalent

Engine House No. 10, 1341 Maryland Ave., NE., Washington, DC, 08001063, LISTED, 11/19/08 (Firehouses in Washington, DC MPS)

Nathaniel Parker Gage School, 2035 2nd St., NW., Washington, DC, 08001064, LISTED, 11/19/08 (Public School Buildings of Washington, DC MPS)

HAWAII

Maui County

Ka'ahumanu Avenue—Naniloa Drive Overpass, Naniloa Dr. at Kaahumanu Ave., Wailuku, 08001065, LISTED, 11/19/08

IOWA

Jones County

Stone City Historic District, 12828–12573 Stone City Rd., 12392–12340 Dearborn Rd., 12381–12551 County Rd. X28, Anamosa vicinity, 08001099, LISTED, 11/21/08

KANSAS

Ellis County

St. Joseph's Church and Parochial School, 210 W. 13th and 217 W. 13th, Hays, 08001066, LISTED, 11/19/08

Reno County

Ranson Hotel, 4918 E. Main, Medora, 08001067, LISTED, 11/20/08

Riley County

First Congregational Church, 700 Poyntz Ave., Manhattan, 08001068, LISTED, 11/13/08

MARYLAND

Allegheny County

Folck's Mill, Address Restricted, Cumberland vicinity, 08001071, LISTED, 11/21/08

Howard County

Round About Hills, 15505 Cattail Oaks, Glenwood vicinity, 08001072, LISTED, 11/20/08

Montgomery County

Carderock Springs Historic District, Roughly bounded by I–495, Cabin John Regional Park, Seven Locks Rd., Fenway Rd. and Persimmon Tree Ln., Bethesda, 08001074, LISTED, 11/21/08 (Subdivisions by

Edmund Bennett and Keyes, Lethbridge and Condon in Montgomery County, MD, 1956–1973, MPS)

MASSACHUSETTS

Hampden County

Prospect Hill School, 33 Montgomery St., Westfield, 08001069, LISTED, 11/19/08

Middlesex County

Dennison Manufacturing Co. Paper Box Factory, 175 Maple St., Marlborough, 08001070, LISTED, 11/19/08

MICHIGAN

Montcalm County

Greenville Downtown Historic District, Lafayette between Montcalm and Benton and adjacent block of Montcaolm, Grove, Cass, and Washington on either side, Greenville, 08001104, LISTED, 11/19/08

MISSOURI

Macon County

La Plata Square Historic District, Along portions of Gex, Sanders, and Moore St., La Plata, 08000696, LISTED, 11/20/08

NEW YORK

Erie County

Lancaster District School No. 6, 3703 Bowen Rd., Lancaster, 08001076, LISTED, 11/18/08

Ontario County

Dickson, John and Mary, House, 9010 Main St., West Bloomfield, 08001077, LISTED, 11/19/08

Seneca County

Ritter, Simon, Cobblestone Farmhouse, 5102 NY Rt. 89, Varick, 08001081, LISTED, 11/18/08 (Cobblestone Architecture of New York State MPS)

Warren County

FORWARD shipwreck site (motor launch), Lake George (submerged) near Diamond Island, Lake George vicinity, 08001082, LISTED, 11/21/08

TENNESSEE

Davidson County

Glen Leven, 4000 Franklin Rd., Oak Hill, 08001085, LISTED, 11/19/08 (Historic Family Farms in Middle Tennessee MPS)

Home for Aged Masons, Ben Allen Ln. and R.S. Glass Blvd., Nashville, 08001086, LISTED, 11/19/08

[FR Doc. E8–31068 Filed 12–30–08; 8:45 am]

BILLING CODE 4310–70–P

DEPARTMENT OF THE INTERIOR

National Park Service

National Register of Historic Places; Notification of Pending Nominations and Related Actions

Nominations for the following properties being considered for listing or related actions in the National Register were received by the National Park Service before December 13, 2008. Pursuant to section 60.13 of 36 CFR Part 60 written comments concerning the significance of these properties under the National Register criteria for evaluation may be forwarded by United States Postal Service, to the National Register of Historic Places, National Park Service, 1849 C St. NW., 2280, Washington, DC 20240; by all other carriers, National Register of Historic Places, National Park Service, 1201 Eye St. NW., 8th floor, Washington, DC 20005; or by fax, 202–371–6447. Written or faxed comments should be submitted by January 15, 2009.

J. Paul Loether,

Chief, National Register of Historic Places/National Historic Landmarks Program.

ALABAMA

Montgomery County

Tankersley Rosenwald School, (The Rosenwald School Building Fund and Associated Buildings MPS) 10 mi. S. on Montgomery on U.S. 31 to Pettus Rd. to School Spur on W. side, Hope Hull, 08001332

ARIZONA

Maricopa County

Myrtle Avenue Residential Historic District, 6305–6423 W. Myrtle Ave., Glendale, 08001345

Pinal County

Evergreen Addition Historic District, Generally bounded by McMurray Blvd., Gilbert Ave., Florence Blvd., and Casa Grande Ave., Casa Grande, 08001346

ARKANSAS

Ashley County

Hamburg Commercial Historic District, 100–200 block of E. Adams; 100 block N. Mulberry; 201 S. Mulberry; 201 and 205 N. Main St., Hamburg, 08001333

Carroll County

Concord School House, 805 Co. Rd. 309, Eureka Springs, 08001334

Cleburne County

Disfarmer, Mike Meyer, Gravesite, In the Heber Springs Cemetery at the NR corner of Oak St. and S. 4th St., Heber Springs, 08001335

Conway County

Eral Building, (Arkansas Highway History and Architecture MPS) 201 N. St. Joseph St., Morrilton, 08001336

Drew County

Ridgeway Hotel Historic District, 200–206 E. Gaines St., Monticello, 08001337

Fulton County

AR 289 Bridge Over English Creek, (Historic Bridges of Arkansas MPS) AR289 over English Creek, Mammoth Spring, 08001338

Hempstead County

Southwestern Proving Ground Building No. 4, (World War II Home Front Efforts in Arkansas, MPS) 259 Hempstead Co. Rd. 279, Hope, 08001339

Nevada County

Ephesus Cemetery, ¼ mi. N. of Emmet on U.S. 67, Emmet, 08001340

Pope County

Little Rock to Cantonment Gibson Rd—Fourth Street Segment, (Cherokee Trail of Tears MPS) 4th St. between Union Grove and Blackland Sts., Atkins, 08001342

Pulaski County

Block 35 Cobblestone Alley, W. of the N. end of Rock St., Little Rock, 08001343

West 7th Street Historic District, Portions of 800–1100 blocks of W. 7th St., Little Rock, 08001341

Washington County

Illinois River Bridge at Phillips Ford, (Historic Bridges of Arkansas MPS) Co. Rd. 848 over the Illinois River, Savoy, 08001344

CALIFORNIA

Amador County

Kennedy Mine Historic District, 12594 Kennedy Mine Rd., Jackson, 08001347

KANSAS

Cloud County

Clyde School, (Public Schools of Kansas MPS) 620 Broadway St., Clyde, 08001348

Dickinson County

Wilson Pratt Truss Bridge, (Metal Truss Bridges in Kansas 1861–1939 MPS) 2.9 m. W. of Rain Rd. on 3200 Ave., Chapman, 08001349

Rice County

Beckett, Charles K., House, 210 W. Main, Sterling, 08001350

Riley County

Persons Barn and Granary, (Agriculture-Related Resources of Kansas) 2103 Hwy. 18, Manhattan, 08001351

Rush County

Lone Star School, District 64, (Public Schools of Kansas MPS) RR, 1¼ m. W. of Bison Ave. M., Bison, 08001352

Shawnee County

Hopkins House, 6033 SE U.S. Hwy. 40, Tecumseh, 08001353

Shoemaker, J.A., House, 1434 SW. Pass Ave., Topeka, 08001354

MAINE

Androscoggin County

Main Street-Frye Street Historic District, Frye St. and portions of Main St. and College St., Lewiston, 08001355

Aroostook County

Lagassey Farm, 786 Main St., Saint Agatha, 08001356

Somerset County

Kromberg Barn, E. side of E. Pond Rd., across from number 462, Smithfield, 08001357

Washington County

Plummer, Capt. John, House, 23 Pleasant St., Addison, 08001358

MISSOURI

Jackson County

1901 McGee Street Automotive Service Building, 1901–1907 McGee St., Kansas City, 08001359

St. Francois County

Farmington State Hospital No. 4 Cemetery, ¼ mi. S. of Doubet Rd. on E. side of Pullan Rd., Farmington, 08001360

NORTH CAROLINA

Brunswick County

Kilgo, Bishop John C., House, 2100 The Plaza, Charlotte, 08001364

Buncombe County

Smith, Richard Sharp, House, 655 Chunns Cove Rd., Asheville, 08001361

Forsyth County

Old Richmond Schoolhouse and Gymnasium, 6315 and 6375 Tobaccoville Rd., Tobaccoville, 08001362

Harnett County

Harrington-Dewar House, 994 Fred Burns Rd., Holly Springs, 08001363

Mecklenburg County

Robinson Rock House Ruin and Plantation Site, Reedy Creek Park-2900 Rocky River Rd., Charlotte, 08001365

Polk County

Mill Farm Inn, 701 Harmon Field Rd., Tryon, 08001366

NORTH DAKOTA

Richland County

Fort Abercrombie, Richland Co. Rt. 4, Abercrombie, 08001367

OREGON

Lane County

Willakenzie Grange Hall, 3055 Willakenzie Rd., Eugene, 08001368

SOUTH CAROLINA

Newberry County

Hannah Rosenwald School, (Rosenwald School Building Program in South Carolina, 1917–1932) 61 Deadfall Rd., Newberry, 08001369

WISCONSIN

Columbia County

Robertson, John A. and Martha, House, 456 Seminary St., Lodi, 08001370

Request for removal has been made for the following resources:

ARKANSAS

Sebastian County

Old U.S. 71–Devil's Backbone Segment S. Coker St. From just SW of Stewart Ct. to current U.S. 71 Greenwood, 04000488

MAINE

Cumberland County

Portland Stove Foundry, 57 Kennebec St. Portland, 74000164

[FR Doc. E8–31069 Filed 12–30–08; 8:45 am]

BILLING CODE 4310–70–P

INTERNATIONAL TRADE COMMISSION

[Investigation No. 337–TA–615]

In the Matter of: Certain Ground Fault Circuit Interrupters and Products Containing Same; Notice of Commission Determination To Extend the Deadline for Receiving Written Submissions on Remedy, the Public Interest and Bonding; Extension of Target Date

AGENCY: U.S. International Trade Commission.

ACTION: Notice.

SUMMARY: Notice is hereby given that the U.S. International Trade Commission has determined to extend the deadline for receiving written submissions on remedy, the public interest, and bonding until two weeks from the date of issuance of the public version of the presiding administrative law judge's (ALJ) recommended determination on remedy and bonding (''RD'') and to extend the target date for completion of the above-captioned investigation by thirty (30) days to Friday, March 6, 2009.

FOR FURTHER INFORMATION CONTACT: Paul M. Bartkowski, Office of the General Counsel, U.S. International Trade Commission, 500 E Street, SW., Washington, DC 20436, telephone (202) 708–5432. Copies of non-confidential documents filed in connection with this investigation are or will be available for inspection during official business hours (8:45 a.m. to 5:15 p.m.) in the Office of the Secretary, U.S. International Trade Commission, 500 E Street, SW., Washington, DC 20436, telephone (202) 205–2000. General information concerning the Commission may also be obtained by accessing its Internet server at *http://www.usitc.gov.* The public record for this investigation may be viewed on the Commission's electronic docket (EDIS) at *http://edis.usitc.gov.* Hearing-impaired persons are advised that information on this matter can be obtained by contacting the Commission's TDD terminal on (202) 205–1810.

SUPPLEMENTARY INFORMATION: This investigation was instituted on September 18, 2007, based on a complaint filed by Pass & Seymour, Inc. (''P&S'') of Syracuse, New York. The complaint, as supplemented, alleged violations of section 337 of the Tariff Act of 1930 (19 U.S.C. **1337) in the importation into the United States, the sale for importation, and the sale within the United States after importation of certain ground fault circuit interrupters and products containing the same by reason of infringement of certain claims of certain United States patents. The complaint named 15 respondents: General Protecht Group, Inc. (''GPG'') of Zhejiang, China; General Protecht Group U.S., Inc. of Atlanta, Georgia; Shanghai ELE Manufacturing Corporation (''ELE'') of Shanghai, China; Shanghai Meihao Electric, Inc. (''Meihao'') of Shanghai, China; Wenzhou Trimone Company (''Trimone'') of Zhejiang, China; Cheetah USA Corp. (''Cheetah'') of Sandy, Utah; GX Electric (''GX'') of Pompano Beach, Florida; Nicor Inc. (''Nicor'') of Albuquerque, New Mexico; Orbit Industries, Inc. (''Orbit'') of Los Angeles, California; The Designer's Edge (''TDE'') of Bellevue, Washington; Universal Security Instruments, Inc. (''USI'') of Owings Mills, Maryland; Colacino Electric Supply, Inc. (''Colacino'') of Newark, New York; Ingram Products, Inc. of Jacksonville, Florida; Lunar Industrial & Electrical, Inc. of Miami, Florida; and Quality Distributing, LLC. (''Quality'') of Hillsboro, Oregon.

On September 24, 2008, the ALJ issued his final ID, finding a violation with respect to each patent by each remaining respondent. The ALJ issued his recommended determination on remedy and bonding (RD) on October 8, 2008. Respondents ELE (in a joint brief with its respondent customers Cheetah, Colacino, Orbit, and Nicor), Meihao (in a joint brief with its respondent customer TDE), GPG, and Trimone each filed a petition for review of the ID. P&S and the Commission investigative attorney (''IA'') each filed a response to the respondents' petitions for review. On December 8, 2008, after considering the petitions for review and the responses thereto, the Commission determined to review the ALJ's ID in part. The Commission requested written submissions on certain issues relating to violation as well as remedy, the public interest, and bonding. The Commission set a deadline of December 22, 2008, for written submissions, and December 31, 2008, for reply submissions thereon.

In light of the fact that the ALJ has not yet issued a public version of his RD, the Commission has determined to extend the deadline for receiving initial written submissions on remedy, the public interest, and bonding until two weeks from the date of issuance of the public version of the ALJ's RD. Complainants and the IA are also requested to submit proposed remedial orders for the Commission's consideration by the extended deadline. The Commission has also determined to extend the deadline for reply submissions on remedy, the public interest, and bonding until ten (10) days after the filing date of the initial written submissions. This extension does not affect the due dates for the parties' written submissions on issues relating to violation of section 337.

Persons filing written submissions must file the original document and 12 true copies thereof on or before the deadlines stated above with the Office of the Secretary. Any person desiring to submit a document to the Commission in confidence must request confidential treatment unless the information has already been granted such treatment during the proceedings. All such requests should be directed to the Secretary of the Commission and must include a full statement of the reasons why the Commission should grant such treatment. *See* 19 CFR 210.6. Documents for which confidential treatment by the Commission is sought will be treated accordingly. All nonconfidential written submissions will be available for public inspection at the Office of the Secretary.

The Commission has also determined to extend the target date for completion of the above-referenced investigation by thirty (30) days, to March 6, 2009.

The authority for the Commission's determination is contained in section 337 of the Tariff Act of 1930, as amended (19 U.S.C. 1337), and in section 210.51(a) of the Commission's Rules of Practice and Procedure (19 CFR 210.51(a)).

Issued: December 19, 2008.

By order of the Commission.

Marilyn R. Abbott,

Secretary to the Commission.

[FR Doc. E8–31104 Filed 12–30–08; 8:45 am]

BILLING CODE 7020–02–P

DEPARTMENT OF JUSTICE

Notice of Extension of the Public Comment Period Regarding Stipulated Orders Under the Clean Water Act and the Safe Drinking Water Act

Notice is hereby given that on November 19, 2008, two Stipulated Orders for Preliminary Injunctive Relief (''Stipulated Orders'') in *United States* v. *Commonwealth Utilities Corporation and the Commonwealth of the Northern Mariana Islands*, Civil Action No. 08–0051, were lodged with the United States District Court for the Commonwealth of the Northern Mariana Islands. The Commonwealth Utilities Corporation (''CUC'') is a public corporation that owns and operates the Agingan and Sadog Tasi Sewage Treatment Plants and associated wastewater collection and conveyance systems, public water systems, and power plants located in the Commonwealth of the Northen Mariana Islands (''CNMI'').

The Complaint, which was filed concurrently with the lodging of the Stipulated Orders, alleges that CUC violated the Clean Water Act (''CWA''), 33 U.S.C. 1251–1387, as amended by the Oil Pollution Act, 33 U.S.C. 2701–2762; and the Safe Drinking Water Act (''SDWA''), 42 U.S.C. 300f–300j–26. In the Complaint, the United States seeks injunctive relief and civil penalties relating to CUC's wastewater, drinking water, and power operations. The Complaint joins CNMI as a statutory defendant under Section 309(e) of the CWA, 33 U.S.C. 1319(e). CNMI is also a signatory to the Stipulated Orders.

Stipulated Order One is intended to ensure that CUC's wastewater and drinking water systems achieve compliance with the CWA and SDWA. The major components of Stipulated Order One are: (1) The reformation of CUC's management, finances, and operations; (2) the development of a wastewater and drinking water Master Plan; and (3) the construction of wastewater infrastructure. CUC is also required to take steps to comply with National Pollution Discharge Elimination System permits and compliance orders, comply with drinking water standards, and to eliminate spills from the wastewater system.

Stipulated Order Two is intended to ensure that CUC's power plant facilities achieve compliance with the CWA. These requirements include requiring CUC to eliminate oil spills, implement appropriate spill prevention measures, implement effective inspection procedures for its oil storage facilities, provide containment for oil storage facilities, and prepare appropriate operating plans.

On December 2, 2008, a Notice of Lodging was published informing the public of the lodging of the Stipulated Orders and the 30 day public comment period. 73 FR at 73,348. The public comment period was to expire on January 1, 2009.

On December 23, 2008, the United States District Court for the Northern Marina Islands granted an Order extending the public comment period to January 31, 2009.

Therefore, the Department of Justice will continue to receive, until January 31, 2009, comments relating to the Stipulated Orders. Comments should be addressed to the Assistant Attorney General, Environment and Natural Resources Division, and either e-mailed to *pubcomment-ees.enrd@usdoj.gov* or mailed to P.O. Box 7611, U.S. Department of Justice, Washington, DC 20044–7611, and should refer to *United States* v. *Commonwealth Utilities Corporation and the Commonwealth of the Northern Mariana Islands*, D.J. Ref. 90–5–1–1–08471.

The Stipulated Orders may be examined at U.S. EPA Region IX at 75 Hawthorne Street, San Francisco, California 94105. During the public comment period, the Stipulated Orders may also be examined on the following Department of Justice Web site, *http://www.usdoj.gov/enrd/Consent_Decrees.html*. A copy of the Stipulated Orders may also be obtained by mail from the Consent Decree Library, P.O. Box 7611, U.S. Department of Justice, Washington, DC 20044–7611 or by faxing or e-mailing a request to Tonia Fleetwood (*tonia.fleetwood@usdoj.gov*), fax No. (202) 514–0097, phone confirmation number (202) 514–1547. In requesting a copy from the Consent Decree Library, please enclose a check in the amount of *$31.00* for Stipulated Order Number One and *$21.25* for Stipulated Order Number Two (25 cents per page reproduction cost) payable to the U.S. Treasury or, if by e-mail or fax, forward a check in that amount to the Consent Decree Library at the stated address.

Henry Friedman,

Assistant Section Chief, Environmental Enforcement Section, Environment and Natural Resources Division.

[FR Doc. E8–31064 Filed 12–30–08; 8:45 am]

BILLING CODE 4410–15–P

DEPARTMENT OF JUSTICE

Bureau of Alcohol, Tobacco, Firearms and Explosives

[Docket No. ATF 28N]

Commerce in Explosives; List of Explosive Materials (2008R–17T)

AGENCY: Bureau of Alcohol, Tobacco, Firearms and Explosives (ATF), Department of Justice.

ACTION: Notice of List of Explosive Materials.

SUMMARY: Pursuant to 18 U.S.C. 841(d) and 27 CFR 555.23, the Department must publish and revise at least annually in the **Federal Register** a list of explosives determined to be within the coverage of 18 U.S.C. 841 *et seq.* The list covers not only explosives, but also blasting agents and detonators, all of which are defined as explosive materials in 18 U.S.C. 841(c). This notice publishes the 2008 List of Explosive Materials.

DATES: The list becomes effective upon publication of this notice on December 31, 2008.

FOR FURTHER INFORMATION CONTACT: Debra S. Satkowiak, Chief; Explosives Industry Programs Branch; Arson and Explosives Programs Division; Bureau of Alcohol, Tobacco, Firearms and Explosives; United States Department of Justice; 99 New York Avenue, NE., Washington, DC 20226 (202–648–7100).

SUPPLEMENTARY INFORMATION: The list is intended to include any and all mixtures containing any of the materials on the list. Materials constituting blasting agents are marked by an asterisk. While the list is comprehensive, it is not all-inclusive. The fact that an explosive material is not on the list does not mean that it is not within the coverage of the law if it otherwise meets the statutory definitions in 18 U.S.C. 841. Explosive materials are listed alphabetically by their common names followed, where applicable, by chemical names and synonyms in brackets.

The Department has not added any new terms to the list of explosives or removed or revised any listing since its last publication.

This list supersedes the List of Explosive Materials dated December 7, 2007 (Docket No. ATF 25N, 72 FR 69228).

Notice of List of Explosive Materials

Pursuant to 18 U.S.C. 841(d) and 27 CFR 555.23, I hereby designate the following as explosive materials covered under 18 U.S.C. 841(c):

A

Acetylides of heavy metals.
Aluminum containing polymeric propellant.
Aluminum ophorite explosive.
Amatex.
Amatol.
Ammonal.
Ammonium nitrate explosive mixtures (cap sensitive).
*Ammonium nitrate explosive mixtures (non-cap sensitive).
Ammonium perchlorate having particle size less than 15 microns.
Ammonium perchlorate composite propellant.
Ammonium perchlorate explosive mixtures.
Ammonium picrate [picrate of ammonia, Explosive D].
Ammonium salt lattice with isomorphously substituted inorganic salts.
*ANFO [ammonium nitrate-fuel oil].
Aromatic nitro-compound explosive mixtures.
Azide explosives.

B

Baranol.
Baratol.
BEAF [1, 2–bis (2, 2–difluoro–2–nitroacetoxyethane)].
Black powder.
Black powder based explosive mixtures.
*Blasting agents, nitro-carbo-nitrates, including non-cap sensitive slurry and water gel explosives.
Blasting caps.
Blasting gelatin.
Blasting powder.
BTNEC [bis (trinitroethyl) carbonate].
BTNEN [bis (trinitroethyl) nitramine].
BTTN [1,2,4 butanetriol trinitrate].
Bulk salutes.
Butyl tetryl.

C

Calcium nitrate explosive mixture.
Cellulose hexanitrate explosive mixture.
Chlorate explosive mixtures.
Composition A and variations.
Composition B and variations.
Composition C and variations.
Copper acetylide.
Cyanuric triazide.
Cyclonite [RDX].
Cyclotetramethylenetetranitramine [HMX].
Cyclotol.
Cyclotrimethylenetrinitramine [RDX].

D

DATB [diaminotrinitrobenzene].
DDNP [diazodinitrophenol].
DEGDN [diethyleneglycol dinitrate].
Detonating cord.
Detonators.
Dimethylol dimethyl methane dinitrate composition.
Dinitroethyleneurea.
Dinitroglycerine [glycerol dinitrate].
Dinitrophenol.
Dinitrophenolates.
Dinitrophenyl hydrazine.
Dinitroresorcinol.
Dinitrotoluene-sodium nitrate explosive mixtures.
DIPAM [dipicramide; diaminohexanitrobiphenyl].
Dipicryl sulfone.
Dipicrylamine.
Display fireworks.
DNPA [2,2–dinitropropyl acrylate].
DNPD [dinitropentano nitrile].
Dynamite.

E

EDDN [ethylene diamine dinitrate].
EDNA [ethylenedinitramine].
Ednatol.
EDNP [ethyl 4,4–dinitropentanoate].
EGDN [ethylene glycol dinitrate].
Erythritol tetranitrate explosives.
Esters of nitro-substituted alcohols.
Ethyl-tetryl.
Explosive conitrates.
Explosive gelatins.
Explosive liquids.
Explosive mixtures containing oxygen-releasing inorganic salts and hydrocarbons.
Explosive mixtures containing oxygen-releasing inorganic salts and nitro bodies.
Explosive mixtures containing oxygen-releasing inorganic salts and water insoluble fuels.
Explosive mixtures containing oxygen-releasing inorganic salts and water soluble fuels.
Explosive mixtures containing sensitized nitromethane.
Explosive mixtures containing tetranitromethane (nitroform).
Explosive nitro compounds of aromatic hydrocarbons.
Explosive organic nitrate mixtures.
Explosive powders.

F

Flash powder.
Fulminate of mercury.
Fulminate of silver.
Fulminating gold.
Fulminating mercury.
Fulminating platinum.
Fulminating silver.

G

Gelatinized nitrocellulose.
Gem-dinitro aliphatic explosive mixtures.
Guanyl nitrosamino guanyl tetrazene.
Guanyl nitrosamino guanylidene hydrazine.

Guncotton.

H

Heavy metal azides.
Hexanite.
Hexanitrodiphenylamine.
Hexanitrostilbene.
Hexogen [RDX].
Hexogene or octogene and a nitrated N-methylaniline.
Hexolites.
HMTD [hexamethylenetriperoxidediamine].
HMX [cyclo-1,3,5,7-tetramethylene 2,4,6,8-tetranitramine; Octogen].
Hydrazinium nitrate/hydrazine/aluminum explosive system.
Hydrazoic acid.

I

Igniter cord.
Igniters.
Initiating tube systems.

K

KDNBF [potassium dinitrobenzo-furoxane].

L

Lead azide.
Lead mannite.
Lead mononitroresorcinate.
Lead picrate.
Lead salts, explosive.
Lead styphnate [styphnate of lead, lead trinitroresorcinate].
Liquid nitrated polyol and trimethylolethane.
Liquid oxygen explosives.

M

Magnesium ophorite explosives.
Mannitol hexanitrate.
MDNP [methyl 4,4-dinitropentanoate].
MEAN [monoethanolamine nitrate].
Mercuric fulminate.
Mercury oxalate.
Mercury tartrate.
Metriol trinitrate.
Minol-2 [40% TNT, 40% ammonium nitrate, 20% aluminum].
MMAN [monomethylamine nitrate]; methylamine nitrate.
Mononitrotoluene-nitroglycerin mixture.
Monopropellants.

N

NIBTN [nitroisobutametriol trinitrate].
Nitrate explosive mixtures.
Nitrate sensitized with gelled nitroparaffin.
Nitrated carbohydrate explosive.
Nitrated glucoside explosive.
Nitrated polyhydric alcohol explosives.
Nitric acid and a nitro aromatic compound explosive.
Nitric acid and carboxylic fuel explosive.
Nitric acid explosive mixtures.
Nitro aromatic explosive mixtures.
Nitro compounds of furane explosive mixtures.
Nitrocellulose explosive.
Nitroderivative of urea explosive mixture.
Nitrogelatin explosive.
Nitrogen trichloride.
Nitrogen tri-iodide.
Nitroglycerine [NG, RNG, nitro, glyceryl trinitrate, trinitroglycerine].
Nitroglycide.
Nitroglycol [ethylene glycol dinitrate, EGDN].
Nitroguanidine explosives.
Nitronium perchlorate propellant mixtures.
Nitroparaffins Explosive Grade and ammonium nitrate mixtures.
Nitrostarch.
Nitro-substituted carboxylic acids.
Nitrourea.

O

Octogen [HMX].
Octol [75 percent HMX, 25 percent TNT].
Organic amine nitrates.
Organic nitramines.

P

PBX [plastic bonded explosives].
Pellet powder.
Penthrinite composition.
Pentolite.
Perchlorate explosive mixtures.
Peroxide based explosive mixtures.
PETN [nitropentaerythrite, pentaerythrite tetranitrate, pentaerythritol tetranitrate].
Picramic acid and its salts.
Picramide.
Picrate explosives.
Picrate of potassium explosive mixtures.
Picratol.
Picric acid (manufactured as an explosive).
Picryl chloride.
Picryl fluoride.
PLX [95% nitromethane, 5% ethylenediamine].
Polynitro aliphatic compounds.
Polyolpolynitrate-nitrocellulose explosive gels.
Potassium chlorate and lead sulfocyanate explosive.
Potassium nitrate explosive mixtures.
Potassium nitroaminotetrazole.
Pyrotechnic compositions.
PYX [2,6-bis(picrylamino)] 3,5-dinitropyridine.

R

RDX [cyclonite, hexogen, T4, cyclo-1,3,5,-trimethylene-2,4,6,-trinitramine; hexahydro-1,3,5-trinitro-S-triazine].

S

Safety fuse.
Salts of organic amino sulfonic acid explosive mixture.
Salutes (bulk).
Silver acetylide.
Silver azide.
Silver fulminate.
Silver oxalate explosive mixtures.
Silver styphnate.
Silver tartrate explosive mixtures.
Silver tetrazene.
Slurried explosive mixtures of water, inorganic oxidizing salt, gelling agent, fuel, and sensitizer (cap sensitive).
Smokeless powder.
Sodatol.
Sodium amatol.
Sodium azide explosive mixture.
Sodium dinitro-ortho-cresolate.
Sodium nitrate explosive mixtures.
Sodium nitrate-potassium nitrate explosive mixture.
Sodium picramate.
Special fireworks.
Squibs.
Styphnic acid explosives.

T

Tacot [tetranitro-2,3,5,6-dibenzo-1,3a,4,6a tetrazapentalene].
TATB [triaminotrinitrobenzene].
TATP [triacetonetriperoxide].
TEGDN [triethylene glycol dinitrate].
Tetranitrocarbazole.
Tetrazene [tetracene, tetrazine, 1(5-tetrazolyl)-4-guanyl tetrazene hydrate].
Tetrazole explosives.
Tetryl [2,4,6 tetranitro-N-methylaniline].
Tetrytol.
Thickened inorganic oxidizer salt slurried explosive mixture.
TMETN [trimethylolethane trinitrate].
TNEF [trinitroethyl formal].
TNEOC [trinitroethylorthocarbonate].
TNEOF [trinitroethylorthoformate].
TNT [trinitrotoluene, trotyl, trilite, triton].
Torpex.
Tridite.
Trimethylol ethyl methane trinitrate composition.
Trimethylolthane trinitrate-nitrocellulose.
Trimonite.
Trinitroanisole.
Trinitrobenzene.
Trinitrobenzoic acid.
Trinitrocresol.
Trinitro-meta-cresol.
Trinitronaphthalene.
Trinitrophenetol.
Trinitrophloroglucinol.
Trinitroresorcinol.
Tritonal.

U

Urea nitrate.

W

Water-bearing explosives having salts of oxidizing acids and nitrogen bases, sulfates, or sulfamates (cap sensitive).

Water-in-oil emulsion explosive compositions.

X

Xanthamonas hydrophilic colloid explosive mixture.

Approved: December 22, 2008.

Michael Sullivan,

Acting Director.

[FR Doc. E8–31179 Filed 12–30–08; 8:45 am]

BILLING CODE 4410–FY–P

DEPARTMENT OF JUSTICE

Antitrust Division

Notice Pursuant to the National Cooperative Research and Production Act of 1993—Cooperative Research Group on the Development and Evaluation of a Gas Chromatograph Testing Protocol

Notice is hereby given that, on November 26, 2008, pursuant to section 6(a) of the National Cooperative Research and Production Act of 1993, 15 U.S.C. 4301 *et seq.* (''the Act'') Southwest Research Institute—Cooperative Research Group on Development and Evaluation of a Gas Chromatograph Testing Protocol (''GCTP'') has filed written notifications simultaneously with the Attorney General and the Federal Trade Commission disclosing changes in its nature and objective. The notifications were filed for the purpose of extending the Act's provisions limiting the recovery of antitrust plaintiffs to actual damages under specified circumstances. Specifically, the period of performance has been extended to December 15, 2008.

No other changes have been made in either the membership or planned activity of the group research project. Membership in this group research project remains open, and GCTP intends to file additional written notifications disclosing all changes in membership.

On March 6, 2008, GCTP filed its original notification pursuant to section 6(a) of the Act. The Department of Justice published a notice in the **Federal Register** pursuant to section 6(b) of the Act on April 7, 2008 (73 FR 18813).

The last notification was filed with the Department on August 26, 2008. A notice was published in the **Federal Register** pursuant to section 6(b) of the Act on September 29, 2008 (73 FR 56611).

Patricia A. Brink,

Deputy Director of Operations, Antitrust Division.

[FR Doc. E8–31037 Filed 12–30–08; 8:45 am]

BILLING CODE 4410–11–M

DEPARTMENT OF JUSTICE

Antitrust Division

Notice Pursuant to the National Cooperative Research and Production Act of 1993—Network Centric Operations Industry Consortium, Inc.

Notice is hereby given that, on November 26, 2008, pursuant to section 6(a) of the National Cooperative Research and Production Act of 1993, 15 U.S.C. 4301 *et seq.* (''the Act'') Network Centric Operations Industry Consortium, Inc. has filed written notifications simultaneously with the Attorney General and the Federal Trade Commission disclosing changes in its membership. The notifications were filed for the purpose of extending the Act's provisions limiting the recovery of antitrust plaintiffs to actual damages under specified circumstances. Specifically, Solera Networks, Lindon, UT has been added as a party to this venture. Also, Advanced Virtual Engine Test Cell, Inc., Springfield, OH; Chandler/May, Inc., Huntsville, AL; PrismTech Corporation, Burlington, MA; Intelligent Automation, Inc., Rockville, MD; and Hewlett-Packard Company, Palo Alto, CA have withdrawn as parties to this venture.

No other changes have been made in either the membership or planned activity of the group research project. Membership in this group research project remains open, and Network Centric Operations Industry Consortium, Inc. intends to file additional written notifications disclosing all changes in membership.

On November 19, 2004, Network Centric Operations Industry Consortium, Inc. filed its original notification pursuant to section 6(a) of the Act. The Department of Justice published a notice in the **Federal Register** pursuant to section 6(b) of the Act on February 2, 2005 (70 FR 5486).

The last notification was filed with the Department on September 5, 2008. A notice was published in the **Federal Register** pursuant to section 6(b) of the Act on October 21, 2008 (73 FR 62542).

Patricia A. Brink,

Deputy Director of Operations, Antitrust Division.

[FR Doc. E8–31041 Filed 12–30–08; 8:45 am]

BILLING CODE 4410–11–M

DEPARTMENT OF JUSTICE

Antitrust Division

Notice Pursuant to the National Cooperative Research and Production Act of 1993—Open Devicenet Vendor Association, Inc.

Notice is hereby given that, on December 3, 2008, pursuant to section 6(a) of the National Cooperative Research and Production Act of 1993, 15 U.S.C. 4301 *et seq.* (''the Act''), Open DeviceNet Vendor Association, Inc. (''ODVA'') has filed written notifications simultaneously with the Attorney General and the Federal Trade Commission disclosing changes in its membership. The notifications were filed for the purpose of extending the Act's provisions limiting the recovery of antitrust plaintiffs to actual damages under specified circumstances. Specifically, Racine Federated Inc., Racine, WI; Mon Seiki Co., Ltd. (U.S. subsidiary Digital Technology Laboratory, Corporation), West Sacramento, CA; and TR-Electronic GmbH, Trossingen, GERMANY have been added as parties to this venture. Also, Contemporary Controls Systems, Inc., Downers Grove, IL; and Bird Electronic Corporation, Solon, OH have withdrawn as parties to this venture.

No other changes have been made in either the membership or planned activity of the group research project. Membership in this group research project remains open, and ODVA intends to file additional written notifications disclosing all changes in membership.

On June 21, 1995, ODVA filed its original notification pursuant to section 6(a) of the Act. The Department of Justice published a notice in the **Federal Register** pursuant to section 6(b) of the Act on February 15, 1996 (61 FY 6039).

The last notification was filed with the Department on September 5, 2008. A notice was published in the **Federal Register** pursuant to section 6(b) of the Act on October 21, 2008 (73 FR 62543).

Patricia A. Brink,

Deputy Director of Operations, Antitrust Division.

[FR Doc. E8–31043 Filed 12–30–08; 8:45 am]

BILLING CODE 4410–11–M

DEPARTMENT OF JUSTICE

Antitrust Division

Notice Pursuant to the National Cooperative Research and Production Act of 1993—Open Systemc Initiative

Notice is hereby given that, on November 21, 2008, pursuant to Section 6(a) of the National Cooperative Research and Production Act of 1993, 15 U.S.C. 4301 *et seq.* (''the Act'') Open SystemC Initiative (''OSCI'') has filed written notifications simultaneously with the Attorney General and the Federal Trade Commission disclosing changes in its membership. The notifications were filed for the purpose of extending the Act's provisions limiting the recovery of antitrust plaintiffs to actual damages under specified circumstances. Specifically, Silistix, Manchester, UNITED KINGDOM has been added as a party to this venture. Also, BlueSpec Inc., Waltham, MA has withdrawn as a party to this venture.

No other changes have been made in either the membership or planned activity of the group research project. Membership in this group research project remains open, and OSCI intends to file additional written notifications disclosing all changes in membership.

On October 9, 2001, OSCI filed its original notification pursuant to Section 6(a) of the Act. The Department of Justice published a notice in the **Federal Register** pursuant to Section 6(b) of the Act on January 3, 2002 (67 FR 350).

The last notification was filed with the Department on March 25, 2008. A notice was published in the **Federal Register** pursuant to Section 6(b) of the Act on May 9, 2008 (73 FR 26415).

Patricia A. Brink,

Deputy Director of Operations, Antitrust Division.

[FR Doc. E8–31040 Filed 12–30–08; 8:45 am]

BILLING CODE 4410–11–M

DEPARTMENT OF JUSTICE

Antitrust Division

Notice Pursuant to the National Cooperative Research and Production Act of 1993—Petroleum Environmental Research Forum

Notice is hereby given that, on November 26, 2008, pursuant to Section 6(a) of the National Cooperative Research and Production Act of 1993, 15 U.S.C. 4301 *et seq.* (''the Act''), the Petroleum Environmental Research Forum (''PERF'') has filed written notifications simultaneously with the Attorney General and the Federal Trade Commission disclosing changes in its membership. The notifications were filed for the purpose of extending the Act's provisions limiting the recovery of antitrust plaintiffs to actual damages under specified circumstances. Specifically, Veolia Water North America Operating Services, Inc., Chicago, IL has been added as a party to this venture.

No other changes have been made in either the membership or planned activity of the group research project. Membership in this group research project remains open, and PERF intends to file additional written notifications disclosing all changes in membership.

On February 10, 1986, PERF filed its original notification pursuant to Section 6(a) of the Act. The Department of Justice published a notice in the **Federal Register** pursuant to Section 6(b) of the Act on March 14, 1986 (51 FR 8903).

The last notification was filed with the Department on July 9, 2008. A notice was published in the **Federal Register** pursuant to Section 6(b) of the Act on July 31, 2008 (73 FR 44773).

Patricia A. Brink,

Deputy Director of Operations, Antitrust Division.

[FR Doc. E8–31038 Filed 12–30–08; 8:45 am]

BILLING CODE 4410–11–M

DEPARTMENT OF JUSTICE

Drug Enforcement Administration

Manufacturer of Controlled Substances; Notice of Application

Pursuant to § 1301.33(a) of Title 21 of the Code of Federal Regulations (CFR), this is notice that on October 29, 2008, Norac Inc., 405 S. Motor Avenue, P.O. Box 577, Azusa, California 91702–3232, made application by renewal to the Drug Enforcement Administration (DEA) to be registered as a bulk manufacturer of Tetrahydrocannabinols (7370), a basic class of controlled substance listed in schedule I.

The company plans to manufacture the listed controlled substance in bulk for formulation into the pharmaceutical controlled substance Marinol® for sale to its customers.

Any other such applicant, and any person who is presently registered with DEA to manufacture such substances, may file comments or objections to the issuance of the proposed registration pursuant to 21 CFR 1301.33(a).

Any such written comments or objections should be addressed, in quintuplicate, to the Drug Enforcement Administration, Office of Diversion Control, Federal Register Representative (ODL), 8701 Morrissette Drive, Springfield, Virginia 22152; and must be filed no later than March 2, 2009.

Dated: December 22, 2008.

Joseph T. Rannazzisi,

Deputy Assistant Administrator, Office of Diversion Control, Drug Enforcement Administration.

[FR Doc. E8–31084 Filed 12–30–08; 8:45 am]

BILLING CODE 4410–09–P

DEPARTMENT OF JUSTICE

Drug Enforcement Administration

Importer of Controlled Substances; Notice of Application

Pursuant to 21 U.S.C. 958(i), the Attorney General shall, prior to issuing a registration under this section to a bulk manufacturer of a controlled substance in schedule I or II, and prior to issuing a registration under 21 U.S.C. 952(a)(2) authorizing the importation of such a substance, provide manufacturers holding registrations for the bulk manufacture of the substance an opportunity for a hearing.

Therefore, in accordance with Title 21 Code of Federal Regulations 1301.34(a), this is notice that on October 14, 2008, Johnson Matthey Inc., Pharmaceutical Materials, 2003 Nolte Drive, West Deptford, New Jersey 08066–1742, has made application by letter to the Drug Enforcement Administration (DEA) to be registered as an importer of the basic classes of controlled substances listed in schedule II:

Drug	Schedule
Thebaine (9333)	II
Noroxymorphone (9668)	II

The company plans to import analytical reference standards for distribution to its customers for research purposes.

Any bulk manufacturer who is presently, or is applying to be, registered with DEA to manufacture such basic class of controlled substance may file comments or objections to the issuance of the proposed registration and may, at the same time, file a written request for a hearing on such application pursuant to 21 CFR 1301.43, and in such form as prescribed by 21 CFR 1316.47.

Any such comments or objections being sent via regular mail should be addressed, in quintuplicate, to the Drug Enforcement Administration, Office of Diversion Control, Federal Register Representative (ODL), 8701 Morrissette Drive, Springfield, Virginia 22152; and

must be filed no later than January 30, 2009.

This procedure is to be conducted simultaneously with, and independent of, the procedures described in 21 CFR § 1301.34(b), (c), (d), (e), and (f). As noted in a previous notice published in the **Federal Register** on September 23, 1975, (40 FR 43745–46), all applicants for registration to import the basic class of any controlled substance in schedule I or II are, and will continue to be, required to demonstrate to the Deputy Assistant Administrator, Office of Diversion Control, Drug Enforcement Administration, that the requirements for such registration pursuant to 21 U.S.C. 958(a); 21 U.S.C. 823(a); and 21 CFR 1301.34(b), (c), (d), (e), and (f) are satisfied.

Dated: December 22, 2008.

Joseph T. Rannazzisi,

Deputy Assistant Administrator, Office of Diversion Control, Drug Enforcement Administration.

[FR Doc. E8–31079 Filed 12–30–08; 8:45 am]

BILLING CODE 4410–09–P

DEPARTMENT OF JUSTICE

Drug Enforcement Administration

Importer of Controlled Substances; Notice of Application

Pursuant to 21 U.S.C. 958(i), the Attorney General shall, prior to issuing a registration under this Section to a bulk manufacturer of a controlled substance in schedule I or II and prior to issuing a registration under 21 U.S.C. 952(a)(2) authorizing the importation of such a substance, provide manufacturers holding registrations for the bulk manufacture of the substance an opportunity for a hearing.

Therefore, in accordance with Title 21 Code of Federal Regulations (CFR), 1301.34(a), this is notice that on November 4, 2008, Johnson Matthey, Inc., Pharmaceutical Materials, 2003 Nolte Drive, West Deptford, New Jersey 08066–1742, made application by renewal to the Drug Enforcement Administration (DEA) to be registered as an importer of the basic classes of controlled substances listed in schedule II:

Drug	Schedule
Phenylacetone (8501)	II
Opium, raw (9600)	II
Poppy Straw Concentrate (9670)	II

The company plans to import the listed controlled substances as raw materials for use in the manufacture of bulk controlled substances for distribution to its customers.

Any bulk manufacturer who is presently, or is applying to be, registered with DEA to manufacture such basic classes of controlled substances may file comments or objections to the issuance of the proposed registration and may, at the same time, file a written request for a hearing on such application pursuant to 21 CFR 1301.43 and in such form as prescribed by 21 CFR 1316.47.

Any such comments or objections should be addressed, in quintuplicate, to the Drug Enforcement Administration, Office of Diversion Control, Federal Register Representative (ODL), 8701 Morrissette Drive, Springfield, Virginia 22152; and must be filed no later than January 30, 2009.

This procedure is to be conducted simultaneously with, and independent of, the procedures described in 21 CFR 1301.34(b), (c), (d), (e), and (f). As noted in a previous notice published in the **Federal Register** on September 23, 1975, (40 FR 43745), all applicants for registration to import a basic class of any controlled substance in schedule I or II are, and will continue to be, required to demonstrate to the Deputy Assistant Administrator, Office of Diversion Control, Drug Enforcement Administration, that the requirements for such registration pursuant to 21 U.S.C. 958(a); 21 U.S.C. 823(a); and 21 CFR 1301.34(b), (c), (d), (e), and (f) are satisfied.

Dated: December 22, 2008.

Joseph T. Rannazzisi,

Deputy Assistant Administrator, Office of Diversion Control, Drug Enforcement Administration.

[FR Doc. E8–31080 Filed 12–30–08; 8:45 am]

BILLING CODE 4410–09–P

DEPARTMENT OF JUSTICE

Drug Enforcement Administration

Importer of Controlled Substances; Notice of Registration

By Notice dated September 22, 2008, and published in the **Federal Register** on September 29, 2008, (73 FR 56611), GE Healthcare, 3350 North Ridge Avenue, Arlington Heights, Illinois 60004–1412, made application by renewal to the Drug Enforcement Administration (DEA) to be registered as an importer of Cocaine (9041), a basic class of controlled substance listed in schedule II.

The company plans to import small quantities of ioflupane, in the form of three separate analogues of Cocaine, to validate production and QC systems; for a reference standard; and for producing material for future investigational new drug (IND) submission.

No comments or objections have been received. DEA has considered the factors in 21 U.S.C. 823(a) and 952(a) and determined that the registration of GE Healthcare to import the basic class of controlled substance is consistent with the public interest, and with United States obligations under international treaties, conventions, or protocols in effect on May 1, 1971, at this time. DEA has investigated GE Healthcare to ensure that the company's registration is consistent with the public interest. The investigation has included inspection and testing of the company's physical security systems, verification of the company's compliance with state and local laws, and a review of the company's background and history. Therefore, pursuant to 21 U.S.C. 952(a) and 958(a), and in accordance with 21 CFR 1301.34, the above named company is granted registration as an importer of the basic class of controlled substance listed.

Dated: December 22, 2008.

Joseph T. Rannazzisi,

Deputy Assistant Administrator, Office of Diversion Control, Drug Enforcement Administration.

[FR Doc. E8–31081 Filed 12–30–08; 8:45 am]

BILLING CODE 4410–09–P

DEPARTMENT OF LABOR

Office of the Secretary

Submission for OMB Review: Comment Request

December 19, 2008.

The Department of Labor (DOL) hereby announces the submission of the following public information collection request (ICR) to the Office of Management and Budget (OMB) for review and approval in accordance with the Paperwork Reduction Act of 1995 (Pub. L. 104–13, 44 U.S.C. chapter 35). A copy of this ICR, with applicable supporting documentation; including among other things a description of the likely respondents, proposed frequency of response, and estimated total burden may be obtained from the RegInfo.gov Web site at *http://www.reginfo.gov/public/do/PRAMain* or by contacting Mary Beth Smith-Toomey on 202–693–4223 (this is not a toll-free number)/e-mail: *DOL_PRA_PUBLIC@dol.gov*.

Interested parties are encouraged to send comments to the Office of Information and Regulatory Affairs, Attn: OMB Desk Officer for the

Department of Labor—ETA, Office of Management and Budget, Room 10235, Washington, DC 20503, Telephone: 202–395–7316/Fax: 202–395–6974 (these are not toll-free numbers), e-mail: *OIRA_submission@omb.eop.gov* within 30 days from the date of this publication in the **Federal Register**. In order to ensure the appropriate consideration, comments should reference the OMB Control Number (see below).

The OMB is particularly interested in comments which:

- Evaluate whether the proposed collection of information is necessary for the proper performance of the functions of the agency, including whether the information will have practical utility;
- Evaluate the accuracy of the agency's estimate of the burden of the proposed collection of information, including the validity of the methodology and assumptions used;
- Enhance the quality, utility, and clarity of the information to be collected; and
- Minimize the burden of the collection of information on those who are to respond, including through the use of appropriate automated, electronic, mechanical, or other technological collection techniques or other forms of information technology, e.g., permitting electronic submission of responses.

Agency: Employment Training Administration.

Type of Review: Extension without change of a currently approved collection.

Title of Collection: O*Net Data Collection Program.

OMB Control Number: 1205–0421.

Affected Public: Individuals or Households; State, Local, or Tribal Governments; Federal Government; and Private Sector—Businesses or other for profits, Farms, and Not-for-Profit institutions.

Total Estimated Number of Respondents: 28,594.

Total Estimated Annual Burden Hours: 14,620.

Total Estimated Annual Costs Burden: $0.

Description: The O*Net Data Collection Program yields detailed characteristics of occupations and skills for over 800 occupations by obtaining information from job incumbents/occupational specialists on worker and job characteristics to populate the O*Net (Occupational Information Network) database. The O*Net database information is used for a wide range of purposes related to career counseling and development, curriculum design, human resources functions and workforce investment efforts. The data collection methodology includes contacting businesses/associations to gain their cooperation, and collecting information from employees of cooperating businesses/associations as well as occupational specialists. For additional information, see related notice published at Volume 73 FR 28509 on May 16, 2008.

Darrin A. King,

Departmental Clearance Officer.

[FR Doc. E8–31082 Filed 12–30–08; 8:45 am]

BILLING CODE 4510–30–P

DEPARTMENT OF LABOR

Office of the Secretary

Submission for OMB Review: Comment Request

December 19, 2008.

The Department of Labor (DOL) hereby announces the submission of the following public information collection request (ICR) to the Office of Management and Budget (OMB) for review and approval in accordance with the Paperwork Reduction Act of 1995 (Pub. L. 104–13, 44 U.S.C. chapter 35). A copy of this ICR, with applicable supporting documentation; including among other things a description of the likely respondents, proposed frequency of response, and estimated total burden may be obtained from the RegInfo.gov Web site at *http://www.reginfo.gov/public/do/PRAMain* or by contacting Darrin A. King on 202–693–4129 (this is not a toll-free number)/e-mail: *DOL_PRA_PUBLIC@dol.gov*.

Interested parties are encouraged to send comments to the Office of Information and Regulatory Affairs, Attn: OMB Desk Officer for the Department of Labor—Office of the Secretary, Office of Management and Budget, Room 10235, Washington, DC 20503, Telephone: 202–395–7316/Fax: 202–395–6974 (these are not toll-free numbers), E-mail: *OIRA_submission@omb.eop.gov* within 30 days from the date of this publication in the **Federal Register**. In order to ensure the appropriate consideration, comments should reference the OMB Control Number (see below).

The OMB is particularly interested in comments which:

- Evaluate whether the proposed collection of information is necessary for the proper performance of the functions of the agency, including whether the information will have practical utility;
- Evaluate the accuracy of the agency's estimate of the burden of the proposed collection of information, including the validity of the methodology and assumptions used;
- Enhance the quality, utility, and clarity of the information to be collected; and
- Minimize the burden of the collection of information on those who are to respond, including through the use of appropriate automated, electronic, mechanical, or other technological collection techniques or other forms of information technology, e.g., permitting electronic submission of responses.

Agency: Office of the Secretary.

Type of Review: Extension without change of an existing OMB Control Number.

Title of Collection: Information Collection Plan for GovBenefits Online.

OMB Control Number: 1290–0003.

Affected Public: Individuals or Households.

Total Estimated Number of Respondents: 6,345,715.

Total Estimated Annual Burden Hours: 571,114.

Total Estimated Annual Costs Burden: $0.

Description: Visitors to the GovBenefits Web site answer a series of questions to the extent necessary for locating relevant information on Federal benefits. Responses are used by the respondent to expedite the identification and retrieval of sought after information and resources pertaining to the benefits sponsored by the Federal government. For additional information, see related notice published at Volume 73 FR 62319 on October 20, 2008.

Darrin A. King,

Departmental Clearance Officer.

[FR Doc. E8–31083 Filed 12–30–08; 8:45 am]

BILLING CODE 4510–30–P

DEPARTMENT OF LABOR

Mine Safety and Health Administration

Petitions for Modification

AGENCY: Mine Safety and Health Administration, Labor.

ACTION: Notice of petitions for modification of existing mandatory safety standards.

SUMMARY: Section 101(c) of the Federal Mine Safety and Health Act of 1977 and 30 CFR Part 44 govern the application, processing, and disposition of petitions for modification. This notice is a summary of petitions for modification filed by the parties listed below to modify the application of existing

mandatory safety standards published in Title 30 of the Code of Federal Regulations.

DATES: All comments on the petitions must be received by the Office of Standards, Regulations, and Variances on or before January 30, 2009.

ADDRESSES: You may submit your comments, identified by ''docket number'' on the subject line, by any of the following methods:

1. *Electronic Mail: Standards-Petitions@dol.gov.*
2. *Facsimile:* 1–202–693–9441.
3. *Regular Mail:* MSHA, Office of Standards, Regulations, and Variances, 1100 Wilson Boulevard, Room 2350, Arlington, Virginia 22209, Attention: Patricia W. Silvey, Director, Office of Standards, Regulations, and Variances.
4. *Hand-Delivery or Courier:* MSHA, Office of Standards, Regulations, and Variances, 1100 Wilson Boulevard, Room 2350, Arlington, Virginia 22209, Attention: Patricia W. Silvey, Director, Office of Standards, Regulations, and Variances.

MSHA will consider only comments postmarked by the U.S. Postal Service or proof of delivery from another delivery service such as UPS or Federal Express on or before the deadline for comments. Individuals who submit comments by hand-delivery are required to check in at the receptionist desk on the 21st floor.

Individuals may inspect copies of the petitions and comments during normal business hours at the address listed above.

FOR FURTHER INFORMATION CONTACT: Barbara Barron, Office of Standards, Regulations, and Variances at 202–693–9447 (Voice), *barron.barbara@dol.gov* (E-mail), or 202–693–9441 (Telefax). [These are not toll-free numbers.]

SUPPLEMENTARY INFORMATION:

I. Background

Section 101(c) of the Federal Mine Safety and Health Act of 1977 (Mine Act) allows the mine operator or representative of miners to file a petition to modify the application of any mandatory safety standard to a coal or other mine if the Secretary determines that: (1) An alternative method of achieving the result of such standard exists which will at all times guarantee no less than the same measure of protection afforded the miners of such mine by such standard; or (2) that the application of such standard to such mine will result in a diminution of safety to the miners in such mine. In addition, the regulations at 30 CFR 44.10 and 44.11 establish the requirements and procedures for filing petitions for modifications.

II. Petitions for Modification

Docket Number: M–2008–049–C.
Petitioner: Knight Hawk Coal, LLC, 7290 County Line Road, Cutler, Illinois 62238.
Mine: Prairie Eagle SOUTH Underground Mine, MSHA I.D. No. 11–03205 located in Perry County, Illinois.
Regulation Affected: 30 CFR 75.503 (Permissible electric face equipment; maintenance) and 30 CFR 18.35(a)(5) (Portable trailing cables and cords).
Modification Request: The petitioner requests a modification of the existing standard to permit trailing cables supplying power to permissible equipment to be increased to the maximum length for use in continuous mining sections. The petitioner states that: (1) This petition will only apply to trailing cables supplying three-phase, 995-volt power to continuous mining machines and trailing cables supplying three-phase, 480-volt power to roof bolters; (2) the maximum length of the 995-volt continuous mining machine trailing cables will be 950 feet and the maximum length of the 480-volt trailing cables for roof bolters will be 900 feet; (3) the 995-volt continuous mining machine trailing cables will not be smaller than 2/0 and the 480-volt trailing cables for roof bolters will not be smaller than #2 American Wire Gauge (AWG); (4) all circuits breakers used to protect 2/0 trailing cables exceeding 850 feet in length will have instantaneous trip units calibrated to trip at 1,500 amperes; (5) the trip settings of the circuit breakers will be sealed or locked and will have permanent legible labels; and (6) each label will identify the circuit breaker as being suitable for protecting 2/0 cables and the label will be maintained legible. Persons may review a complete description of petitioner's alternative method and procedures at the MSHA address listed in this notice. The petitioner asserts that the proposed alternative method will at all times guarantee no less than the same measure of protection to all miners at the Prairie Eagle SOUTH Underground Mine as would be provided by the mandatory standard.

Docket Number: M–2008–050–C.
Petitioner: River View Coal, LLC, 835 St., Route 1179, Waverley, Kentucky 42462.
Mine: River View, MSHA I.D. No. 15–03178, located in Union County, Kentucky.
Regulation Affected: 30 CFR 75.1700 (Oil and gas wells).
Modification Request: The petitioner requests an alternative method of compliance for leaving barrier pillars around oil and gas wells. The petitioner proposes to mine through oil and gas wells in all mineable coalbeds. The petitioner states that: (1) A safety barrier of 300 feet in diameter (150 feet between any mined area and a well) will be maintained around all oil and gas wells until approval to proceed with mining has been obtained from the District Manager; (2) the minimum safety barrier approved by the District Manager between any mined area and a well will be 70 feet in diameter for an abandoned well, and 100 feet in diameter for an operational well based on the geological nature of the strata and the functionality of the well as found in the mine area; and (3) consummate to the well being located on the surface using high resolution Global Positioning System (GPS), and being tied to the underground traverse with accuracy no less than 1:30,000. Persons may review a complete description of petitioner's alternative method and procedures at the MSHA address listed in this notice. The petitioner asserts that the proposed alternative method will provide a measure of protection to all miners greater than that of the existing standard.

Docket Number: M–2008–051–C.
Petitioner: River View Coal, LLC, 835 St. Rt. 1179, Waverly, Kentucky 42462.
Mine: River View Mine, MSHA I.D. No. 15–03178 located in Union County, Kentucky.
Regulation Affected: 30 CFR 75.503 (Permissible electric face equipment; maintenance) and 30 CFR 18.35 (Portable trailing cables and cords).
Modification Request: The petitioner requests a modification of the existing standard which requires the operator of each coal mine to maintain in permissible condition all electric face equipment required by 30 CFR 75.500, 75.501, and 75.504 to be permissible when taken into or used inby the last open crosscut of any such mine. The petitioner proposes to increase the maximum length of trailing cables supplying power to permissible equipment used in continuous mining sections by using the following methods: (1) The petition will apply only to trailing cables supplying three-phase, 995-volt power to continuous mining machines and to trailing cables supplying three-phase 480-volt power to roof bolters; (2) the maximum length of the 995-volt continuous mining machine trailing cables will be 950 feet and the maximum length of the 480-volt trailing cables for roof bolters will be

900 feet; (3) the 995-volt continuous mining machine trailing cables will not be smaller than 2/0 and the 480-volt trailing cables for roof bolters will not be smaller than #2 American Wire Gauge (AWG); (4) all circuits breakers used to protect 2/0 trailing cables exceeding 850 feet in length will have an instantaneous trip unit calibrated to trip at 1,500 amperes; (5) the trip setting of the circuit breakers will be sealed or locked and will have permanent legible labels; and (6) each label will identify the circuit breaker as being suitable for protecting 2/0 cables and the label will be maintained legible. Persons may review a complete description of petitioner's alternative method and procedures at the MSHA address listed in this notice. The petitioner asserts that the proposed alternative method will at all times guarantee no less than the same measure of protection to all miners at the River View Mine as would be provided by the existing standard.

Docket Number: M–2008–052–C.

Petitioner: Consolidation Coal Company, 1000 CONSOL Energy Drive, Canonsburg, Pennsylvania 15317.

Mine: Blacksville No. 2 Mine, MSHA I.D. No. 46–01968, located in Monongalia County, West Virginia.

Regulation Affected: 30 CFR 75.1700 (Oil and gas wells).

Modification Request: The petitioner requests a modification of the existing standard that requires the operator to establish and maintain barriers around its oil and gas wells. The petitioner proposes to seal the Pittsburgh Coal Seam from the surrounding strata at the affected wells by using technology developed through a successful well-plugging program. The petitioner states that since the inception of the well-plugging program, more than 550 previously abandoned oil and gas wells have been effectively plugged and more than 475 gas and/or petroleum wells have been successfully mined through or around. Persons may review a complete description of petitioner's alternative method and procedures at the MSHA address listed in this notice. The petitioner asserts that the proposed alternative method will provide no less than the same measure of protection to all miners at the Blacksville No. 2 Mine as would be provided by the existing standard.

Docket Number: M–2008–053–C.

Petitioner: Heidtman Mining, LLC, P.O. Box 312, 6451 Happy Valley Road, Hartford, Arkansas 72938.

Mine: Sebastian County Coal Mine, MSHA I.D. No. 03–01736, located in Sebastian County, Arkansas.

Regulation Affected: 30 CFR 75.1700 (Oil and gas wells).

Modification Request: The petitioner requests a modification of the existing standard that requires the operator to establish and maintain barriers around its oil and gas wells that should not be less than 300 feet in diameter. The petitioner states that: (1) This petition is based on the premise that reducing methane in a coal seam prior to mining provides a better and safer environment for miners; (2) it sets forth procedures whereby the petitioner and the miners will have all the advantages of coal degasification procedures and be able to safely approach and decommission each pinnate (drill hole) drilled for degasification when such pinnate lies ahead of mining in progress; (3) the essence of the procedures is to put the entire well system under substantial negative pressure in advance of each intersection to increase the flow of gas from the well, continue the increased level of gas production under vacuum at essentially a constant level, and continually monitor on the surface; (4) the procedure maintains the negative pressure on the well system during the approach to, and intersection with, the pinnate to provide significant safety advantages; (5) the negative pressure will provide a further method of diluting and carrying gas away from the face at the point of intersection, and complements and enhances the gas removal effects of ventilation that sweeps the face; (6) the negative pressure can also serve to drain away a degree of gas concentrations that might otherwise be liberated through latent feeders or bleeders in the seam; (7) the monitoring will be conducted by trained CDX Gas, LLC observers who will specifically look for a significant increase in oxygen, and maintain open telephone communications with the mine to immediately notify the mine of a change in the gas concentrations; (8) when readings on surface monitoring equipment show that the well system under vacuum is producing oxygen, this signals the introduction of mine atmosphere entering the pinnate due to the vacuum effect at the point of intersection; and (9) as soon as the intersection is detected, the mine will be alerted by the surface observers via the open communications line, mining will be brought to a halt in the affected entry and procedures will be initiated to insert a plug to isolate and decommission the intersection pinnate. The petitioner further states that the procedures employed, including CDX Gas, LLC's role are set out in the existing approved ventilation plan. Persons may review a complete description of petitioner's alternative method and procedures at the MSHA address listed in this notice. The petitioner asserts that the alternative method set forth in this petition improves the overall safety of the miners and fully addresses all concerns of the existing standard.

Docket Number: M–2008–005–M.

Petitioner: Lafarge North America, Inc., 1801 California Street, Suite 4900, Denver, Colorado 80202.

Mine: Davenport Plant Mine, MSHA I.D. No. 13–00125, located in Scott County, Iowa.

Regulation Affected: 30 CFR 56.15005 (Safety belts and lines).

Modification Request: The petitioner requests an alternative method of compliance of the existing standard which requires safety belts and lines to be worn when persons work where there is a danger of falling insofar as it applies to the barge unloading area at its Davenport Cement Plant. The petitioner states that: (1) Because of the unique nature of the layout of the barge unloading area and the operations conducted there, construction of a structure necessary to allow for proper fall protection would create serious additional hazards during construction and would also create significant additional hazards during operations; (2) the hazards associated with operations conducted with proper protection against falls into water would result only in hazards associated with prolonged stays in potential cold water; and (3) the measures proposed would alleviate those hazards, resulting in a workplace with safeguards additional to those already in place while avoiding the creation of hazards associated with a fall protection structure. The proposed measures are as follows: (a) New wider tires will be substituted as bumpers to the dock, creating greater clearance such that there will be no danger of anyone hitting the barge on the way down or being crushed or injured by the movement of the barge should they fall; (b) rope or chain ladders as well as ladder attachment points will be installed and provided; (c) lifesaving rings will be provided in the event of a man overboard; (d) water rescue equipment will be maintained and ready for use in the dock area at all times; and (e) each employee working near the water will receive specialized hazard awareness training. The petitioner states that permitting life jackets or belts pursuant to 30 CFR 56.15020 in addition to the proposed measures will provide equal or greater protection than requiring the use of a

fall protection system. Persons may review a complete description of petitioner's alternative method and procedures at the MSHA address listed in this notice. The petitioner asserts that application of the existing standard will result in a diminution of safety to the miners and the proposed alternative method will at all times provide no less than the same measure of protection afforded the miners of such mine by such standard.

Dated: December 23, 2008.

Patricia W. Silvey,

Director, Office of Standards, Regulations, and Variances.

[FR Doc. E8–31121 Filed 12–30–08; 8:45 am]

BILLING CODE 4510–43–P

NATIONAL ARCHIVES AND RECORDS ADMINISTRATION

Records Schedules; Availability and Request for Comments

AGENCY: National Archives and Records Administration (NARA).

ACTION: Notice of availability of proposed records schedules; request for comments.

SUMMARY: The National Archives and Records Administration (NARA) publishes notice at least once monthly of certain Federal agency requests for records disposition authority (records schedules). Once approved by NARA, records schedules provide mandatory instructions on what happens to records when no longer needed for current Government business. They authorize the preservation of records of continuing value in the National Archives of the United States and the destruction, after a specified period, of records lacking administrative, legal, research, or other value. Notice is published for records schedules in which agencies propose to destroy records not previously authorized for disposal or reduce the retention period of records already authorized for disposal. NARA invites public comments on such records schedules, as required by 44 U.S.C. 3303a(a).

DATES: Requests for copies must be received in writing on or before January 30, 2009. Once the appraisal of the records is completed, NARA will send a copy of the schedule. NARA staff usually prepare appraisal memorandums that contain additional information concerning the records covered by a proposed schedule. These, too, may be requested and will be provided once the appraisal is completed. Requesters will be given 30 days to submit comments.

ADDRESSES: You may request a copy of any records schedule identified in this notice by contacting the Life Cycle Management Division (NWML) using one of the following means:

Mail: NARA (NWML), 8601 Adelphi Road, College Park, MD 20740–6001.

E-mail: request.schedule@nara.gov.

FAX: 301–837–3698.

Requesters must cite the control number, which appears in parentheses after the name of the agency which submitted the schedule, and must provide a mailing address. Those who desire appraisal reports should so indicate in their request.

FOR FURTHER INFORMATION CONTACT: Laurence Brewer, Director, Life Cycle Management Division (NWML), National Archives and Records Administration, 8601 Adelphi Road, College Park, MD 20740–6001. *Telephone:* 301–837–1539. *E-mail: records.mgt@nara.gov.*

SUPPLEMENTARY INFORMATION: Each year Federal agencies create billions of records on paper, film, magnetic tape, and other media. To control this accumulation, agency records managers prepare schedules proposing retention periods for records and submit these schedules for NARA's approval, using the Standard Form (SF) 115, Request for Records Disposition Authority. These schedules provide for the timely transfer into the National Archives of historically valuable records and authorize the disposal of all other records after the agency no longer needs them to conduct its business. Some schedules are comprehensive and cover all the records of an agency or one of its major subdivisions. Most schedules, however, cover records of only one office or program or a few series of records. Many of these update previously approved schedules, and some include records proposed as permanent.

The schedules listed in this notice are media neutral unless specified otherwise. An item in a schedule is media neutral when the disposition instructions may be applied to records regardless of the medium in which the records are created and maintained. Items included in schedules submitted to NARA on or after December 17, 2007, are media neutral unless the item is limited to a specific medium. (*See* 36 CFR 1228.24(b)(3).)

No Federal records are authorized for destruction without the approval of the Archivist of the United States. This approval is granted only after a thorough consideration of their administrative use by the agency of origin, the rights of the Government and of private persons directly affected by the Government's activities, and whether or not they have historical or other value.

Besides identifying the Federal agencies and any subdivisions requesting disposition authority, this public notice lists the organizational unit(s) accumulating the records or indicates agency-wide applicability in the case of schedules that cover records that may be accumulated throughout an agency. This notice provides the control number assigned to each schedule, the total number of schedule items, and the number of temporary items (the records proposed for destruction). It also includes a brief description of the temporary records. The records schedule itself contains a full description of the records at the file unit level as well as their disposition. If NARA staff has prepared an appraisal memorandum for the schedule, it too includes information about the records. Further information about the disposition process is available on request.

Schedules Pending

1. Department of Agriculture, Risk Management Agency (N1–258–08–6, 2 items, 2 temporary items). Reinsurance agreements, final reinsurance agreements, standard reinsurance agreement negotiations records and other files pertaining to crop insurance policies sold or reinsured to private insurance companies.

2. Department of Agriculture, Risk Management Agency (N1–258–08–11, 1 item, 1 temporary item). Statements of work, invoices, solicitations, proposals, task orders, deliverables, and other records relating to pilot programs used to test and evaluate new crop insurance products.

3. Department of Agriculture, Risk Management Agency (N1–258–08–15, 1 item, 1 temporary item). Records relating to agreements that pertain to providing or obtaining support services.

4. Department of Agriculture, Risk Management Agency (N1–258–08–16, 1 item, 1 temporary item). Records relating to delegations of authority.

5. Department of Agriculture, Risk Management Agency (N1–258–08–19, 1 item, 1 temporary item). Records relating to accounting systems. Records pertain to such subjects as systems approved by the Government Accountability Office, management advisory services for financial systems, monitoring system development processes, and accounting system regulations.

6. Department of Agriculture, Risk Management Agency (N1–258–08–20, 1 item, 1 temporary item). Internal control records pertaining to measures taken to safeguard assets, ensure the accuracy of accounting data, promote operational efficiency, and encourage adherence to prescribed managerial policies.

7. Department of Agriculture, Risk Management Agency (N1–258–08–21, 1 item, 1 temporary item). General correspondence relating to personal property management including records relating to nonexpendable equipment, acquisitions, maintenance and disposal of office equipment.

8. Department of Defense, Defense Logistics Agency (N1–361–08–3, 13 items, 12 temporary items). Records relating to criminal incidents, contract fraud and investigations. Included are such records as case files, logs, polygraph examinations, reports, assessments, and related information. Proposed for permanent retention are polygraph examinations relating to historically significant cases. Historically valuable case files are retained permanently by the Defense Criminal Investigative Service.

9. Department of Defense, Defense Logistics Agency (N1–361–08–5, 1 item, 1 temporary item). Records relating to labor hours, projects, workload, civilian time and attendance, contract management, and contractor performance.

10. Department of Health and Human Services, Food and Drug Administration (N1–88–08–2, 11 items, 8 temporary items). Records relating to drug marketing and pre-marketing applications. Included are such records as application files lacking in historical value, records relating to the electronic transport of applications, duplicate copies of applications, and associated tracking data. Proposed for permanent retention are historically significant drug marketing and pre-marketing applications.

11. Department of Homeland Security, National Protection and Programs Directorate (N1–563–08–27, 1 item, 1 temporary item). Master files of an electronic information system used to support the identification of potentially significant changes in the operational status of the nation's critical infrastructure and key resources.

12. Department of Homeland Security, Science and Technology Directorate (N1–563–08–37, 1 item, 1 temporary item). Master files containing information about sets of data on Internet traffic available from non-agency data hosts for cyber defense research and user requests to publish research based on the datasets.

13. Department of Justice, Federal Bureau of Prisons (N1–129–09–12, 2 items, 2 temporary items). Records of regional psychology services offices including drug abuse, mental health, and sex offender treatment files.

14. Department of Justice, Federal Bureau of Prisons (N1–129–09–13, 3 items, 3 temporary items). Master files of an electronic information system used to capture, transfer and store X-ray images and reports for inmates.

15. Department of Justice, Federal Bureau of Prisons (N1–129–09–14, 3 items, 3 temporary items). Master files of an electronic information system used to assess and track inmates' reentry skills and progress.

16. Department of Justice, National Drug Intelligence Center (N1–523–08–5, 1 item, 1 temporary item). Master files of an asset repository that contains intelligence data related to illegal drug manufacturing, trafficking, and related activities.

17. Department of Labor, Bureau of Labor Statistics (N1–257–09–2, 26 items, 23 temporary items). Records from the Office of Survey Methods Research, including researchers working files, study related e-mail, Office of Management and Budget study clearance packages, study announcement and recruitment materials, advance materials, participant database, study materials, interviewer notes, recordings of test sessions, eye tracking database, keystroke recordings, usability test environment files, Monthly Labor Review manuscripts, Web publications, and articles published in professional journals and conference proceedings. Proposed for permanent retention are final reports, presentations at conferences and professional meetings, and training session materials.

18. Department of the Treasury, Internal Revenue Service (N1–58–08–14, 1 item, 1 temporary item). Claims-related letters which are returned to the agency as undeliverable.

19. Federal Election Commission, Office of the Inspector General (N1–339–08–1, 14 items, 10 temporary items). Files of the agency Inspector General, including such records as files relating to non-significant investigations and audits, hotline files, peer review files, policy and procedures files, general correspondence, planning files, and related reports. Proposed for permanent retention are significant investigative and audit files and semi-annual reports.

20. Federal Energy Regulatory Commission, Agency-wide (N1–138–09–1, 28 items, 28 temporary items). Monthly, quarterly, annual, biennial, variable and non-periodic reports submitted by electric, gas, oil, steam-electric, hydropower, transmission, and other public and private utilities. Paper recordkeeping copies were all previously approved for disposal.

21. Millennium Challenge Corporation, Agency-wide (N1–561–08–2, 6 items, 6 temporary items). Master files of electronic information systems used to track correspondence and monitor the status of agency projects. Also included are the agency's public Web site and intranet.

Dated: December 23, 2008.

Michael J. Kurtz,

Assistant Archivist for Records Services—Washington, DC.

[FR Doc. E8–31112 Filed 12–30–08; 8:45 am]

BILLING CODE 7515–01–P

NUCLEAR REGULATORY COMMISSION

[Docket No. 50–499]

STP Nuclear Operating Company Notice of Consideration of Issuance of Amendment to Facility Operating License, Proposed No Significant Hazards Consideration Determination, and Opportunity for a Hearing

The U.S. Nuclear Regulatory Commission (the Commission) is considering issuance of an amendment to Facility Operating License No. NPF–80, issued to STP Nuclear Operating Company (the licensee), for operation of the South Texas Project (STP), Unit 2, located in Matagorda County, Texas.

The proposed amendment would extend the Allowed Outage Time (AOT) for Technical Specification (TS) 3.7.1.7, ''Main Feedwater System.'' This AOT extension is requested to facilitate repairs to the Unit 2 Train D Main Feedwater Isolation Valve (MFIV).

The Action Statement for TS 3.7.1.7 requires that, with one MFIV inoperable in MODES 1 and 2 but open, operation may continue provided the inoperable valve is restored to OPERABLE status within 4 hours; otherwise, the Unit must be placed in HOT STANDBY within the next 6 hours. There is no action required for an inoperable MFIV that is closed.

The Unit 2 Train D MFIV is currently operable, but degraded. The degraded condition is a nitrogen leak of the tubing to the valve accumulator. Temporary repairs have reduced the tube leak such that operator action is maintaining the nitrogen accumulator pressure, assuring the MFIV operability. The licensee states that, although these actions are sufficient at the present time, it is

unknown if the leak will degrade to a point where operator action would not be able to assure operability of the Unit 2 Train D MFIV. In that case, Unit 2 must be shut down in accordance with the Action Statement.

The licensee has proposed to repair the Unit 2 Train D MFIV nitrogen tubing. The licensee estimates that the repair of the tubing leak will render the MFIV inoperable for approximately 8 hours, which exceeds the 4-hour AOT. Therefore, the licensee requests a one-time extension of AOT to 24 hours to permit repair of the MFIV valve without shutting the Unit down. The licensee requests that the amendment be approved on an exigent basis to assure that further degradation of the Unit 2 Train D MFIV will not result in a Unit shutdown.

Before issuance of the proposed license amendment, the Commission will have made findings required by the Atomic Energy Act of 1954, as amended (the Act) and the Commission's regulations.

Pursuant to 10 CFR 50.91(a)(6) for amendments to be granted under exigent circumstances, the NRC staff must determine that the amendment request involves no significant hazards consideration. Under the Commission's regulations in 10 CFR 50.92, this means that operation of the facility in accordance with the proposed amendment would not (1) involve a significant increase in the probability or consequences of an accident previously evaluated; or (2) create the possibility of a new or different kind of accident from any accident previously evaluated; or (3) involve a significant reduction in a margin of safety. As required by 10 CFR 50.91(a), the licensee has provided its analysis of the issue of no significant hazards consideration, which is presented below:

1. Does the proposed change involve a significant increase in the probability or consequences of an accident previously evaluated?

Response:

No. The proposed change extends the action completion time for Unit 2 Train D MFIV from 4 hours to 24 hours. Extending the completion time is not an accident initiator and thus does not change the probability that an accident will occur. However, it could potentially affect the consequences of an accident if an accident occurred during the extended unavailability of the [MFIV, which is inoperable]. The increase in time, that the MFIV is unavailable, is small and the probability of an event occurring during this time period, which would require isolation of the main feedwater flow paths, is low.

Therefore, the proposed change does not involve a significant increase in the probability or consequences of an accident previously evaluated.

2. Does the proposed change create the possibility of a new or different kind of accident from any accident previously evaluated?

Response:

No. The proposed change does not involve any physical alteration of plant equipment and does not change the method by which any safety-related structure, system, or component performs its function or is tested. Closure of the MFIVs is required to mitigate the consequences of the Main Steam Line Break and Main Feedwater Line Break accidents.

Therefore, the proposed change will not create the possibility of a new or different kind of accident from any accident previously evaluated.

3. Does the proposed change involve a significant reduction in a margin of safety?

Response:

No. The proposed change [ ] does not adversely affect existing plant safety margins or the reliability of the equipment assumed to operate in the safety analysis. There are no changes being made to safety analysis assumptions, safety limits or safety system settings that would adversely affect plant safety [margins] as a result of the proposed change.

Therefore, the proposed change does not involve a significant reduction in a margin of safety.

The NRC staff has reviewed the licensee's analysis and, based on this review, it appears that the three standards of 10 CFR 50.92(c) are satisfied. Therefore, the NRC staff proposes to determine that the amendment request involves no significant hazards consideration.

The Commission is seeking public comments on this proposed determination. Any comments received within 14 days after the date of publication of this notice will be considered in making any final determination.

Normally, the Commission will not issue the amendment until the expiration of the 14-day notice period. However, should circumstances change during the notice period, such that failure to act in a timely way would result, for example, in derating or shutdown of the facility, the Commission may issue the license amendment before the expiration of the 14-day notice period, provided that its final determination is that the amendment involves no significant hazards consideration. The final determination will consider all public and State comments received. Should the Commission take this action, it will publish in the **Federal Register** a notice of issuance. The Commission expects that the need to take this action will occur very infrequently.

Written comments may be submitted by mail to the Chief, Rulemaking, Directives and Editing Branch, TWB–05–B01M, Division of Administrative Services, Office of Administration, U.S. Nuclear Regulatory Commission, Washington, DC 20555–0001, and should cite the publication date and page number of this **Federal Register** notice. Documents may be examined, and/or copied for a fee, at the NRC's Public Document Room, located at One White Flint North, Public File Area O1 F21, 11555 Rockville Pike (first floor), Rockville, Maryland.

The filing of requests for hearing and petitions for leave to intervene is discussed below.

Within 60 days after the date of publication of this notice, the person(s) may file a request for a hearing with respect to issuance of the amendment to the subject facility operating license and any person(s) whose interest may be affected by this proceeding and who wishes to participate as a party in the proceeding must file a written request via electronic submission through the NRC E-filing system for a hearing and a petition for leave to intervene. Requests for a hearing and a petition for leave to intervene shall be filed in accordance with the Commission's ''Rules of Practice for Domestic Licensing Proceedings'' in 10 CFR Part 2. Interested person(s) should consult a current copy of 10 CFR 2.309, which is available at the Commission's PDR, located at One White Flint North, Public File Area O1F21, 11555 Rockville Pike (first floor), Rockville, Maryland. Publicly available records will be accessible from the Agencywide Documents Access and Management System's (ADAMS) Public Electronic Reading Room on the Internet at the NRC Web site, *http://www.nrc.gov/reading-rm/doc-collections/cfr*. If a request for a hearing or petition for leave to intervene is filed by the above date, the Commission or a presiding officer designated by the Commission or by the Chief Administrative Judge of the Atomic Safety and Licensing Board Panel, will rule on the request and/or petition; and the Secretary or the Chief Administrative Judge of the Atomic Safety and Licensing Board will issue a notice of a hearing or an appropriate order.

Each contention must consist of a specific statement of the issue of law or fact to be raised or controverted. In addition, the petitioner/requestor shall provide a brief explanation of the bases for the contention and a concise statement of the alleged facts or expert opinion which support the contention and on which the petitioner intends to

rely in proving the contention at the hearing. The petitioner/requestor must also provide references to those specific sources and documents of which the petitioner/requestor is aware and on which the petitioner/requestor intends to rely to establish those facts or expert opinion. The petitioner/requestor must provide sufficient information to show that a genuine dispute exists with the applicant on a material issue of law or fact. Contentions shall be limited to matters within the scope of the amendment under consideration. The contention must be one which, if proven, would entitle the petitioner/requestor to relief. A petitioner/requestor who fails to satisfy these requirements with respect to at least one contention will not be permitted to participate as a party.

Those permitted to intervene become parties to the proceeding, subject to any limitations in the order granting leave to intervene, and have the opportunity to participate fully in the conduct of the hearing.

If a hearing is requested, the Commission will make a final determination on the issue of no significant hazards consideration. The final determination will serve to decide when the hearing is held. If the final determination is that the amendment request involves no significant hazards consideration, the Commission may issue the amendment and make it immediately effective, notwithstanding the request for a hearing. Any hearing held would take place after issuance of the amendment. If the final determination is that the amendment request involves a significant hazards consideration, any hearing held would take place before the issuance of any amendment.

All documents filed in NRC adjudicatory proceedings, including a request for hearing, a petition for leave to intervene, any motion or other document filed in the proceeding prior to the submission of a request for hearing or petition to intervene, and documents filed by interested governmental entities participating under 10 CFR 2.315(c), must be filed in accordance with the NRC E-Filing rule, which the NRC promulgated on August 28, 2007 (72 FR 49139). The E-Filing process requires participants to submit and serve all adjudicatory documents over the internet, or in some cases to mail copies on electronic storage media. Participants may not submit paper copies of their filings unless they seek a waiver in accordance with the procedures described below.

To comply with the procedural requirements of E-Filing, at least ten (10) days prior to the filing deadline, the petitioner/requestor must contact the Office of the Secretary by e-mail at *hearing.docket@nrc.gov*, or by calling (301) 415–1677, to request (1) a digital ID certificate, which allows the participant (or its counsel or representative) to digitally sign documents and access the E-Submittal server for any proceeding in which it is participating; and/or (2) creation of an electronic docket for the proceeding (even in instances in which the petitioner/requestor (or its counsel or representative) already holds an NRC-issued digital ID certificate). Each petitioner/requestor will need to download the Workplace Forms Viewer™ to access the Electronic Information Exchange (EIE), a component of the E-Filing system. The Workplace Forms Viewer™ is free and is available at *http://www.nrc.gov/site-help/e-submittals/install-viewer.html*. Information about applying for a digital ID certificate is available on NRC's public Web site at *http://www.nrc.gov/site-help/e-submittals/apply-certificates.html*.

Once a petitioner/requestor has obtained a digital ID certificate, had a docket created, and downloaded the EIE viewer, it can then submit a request for hearing or petition for leave to intervene. Submissions should be in Portable Document Format (PDF) in accordance with NRC guidance available on the NRC public Web site at *http://www.nrc.gov/site-help/e-submittals.html*. A filing is considered complete at the time the filer submits its documents through EIE. To be timely, an electronic filing must be submitted to the EIE system no later than 11:59 p.m. Eastern Time on the due date. Upon receipt of a transmission, the E-Filing system time-stamps the document and sends the submitter an e-mail notice confirming receipt of the document. The EIE system also distributes an e-mail notice that provides access to the document to the NRC Office of the General Counsel and any others who have advised the Office of the Secretary that they wish to participate in the proceeding, so that the filer need not serve the documents on those participants separately. Therefore, applicants and other participants (or their counsel or representative) must apply for and receive a digital ID certificate before a hearing request/petition to intervene is filed so that they can obtain access to the document via the E-Filing system.

A person filing electronically may seek assistance through the ''Contact Us'' link located on the NRC Web site at *http://www.nrc.gov/site-help/e-submittals.html* or by calling the NRC electronic filing Help Desk, which is available between 8 a.m. and 8 p.m., Eastern Time, Monday through Friday. The electronic filing Help Desk can be contacted by telephone at 1–866–672–7640 or by e-mail at *MSHD.Resource@nrc.gov*.

Participants who believe that they have a good cause for not submitting documents electronically must file a motion, in accordance with 10 CFR 2.302(g), with their initial paper filing requesting authorization to continue to submit documents in paper format. Such filings must be submitted by: (1) First class mail addressed to the Office of the Secretary of the Commission, U.S. Nuclear Regulatory Commission, Washington, DC 20555–0001, Attention: Rulemaking and Adjudications Staff; or (2) courier, express mail, or expedited delivery service to the Office of the Secretary, Sixteenth Floor, One White Flint North, 11555 Rockville Pike, Rockville, Maryland 20852, Attention: Rulemaking and Adjudications Staff. Participants filing a document in this manner are responsible for serving the document on all other participants. Filing is considered complete by first-class mail as of the time of deposit in the mail, or by courier, express mail, or expedited delivery service upon depositing the document with the provider of the service.

Documents submitted in adjudicatory proceedings will appear in NRC's electronic hearing docket which is available to the public at *http://ehd.nrc.gov/ehd_proceeding/home.asp*, unless excluded pursuant to an order of the Commission, an Atomic Safety and Licensing Board, or a Presiding Officer. Participants are requested not to include personal privacy information, such as social security numbers, home addresses, or home phone numbers in their filings. With respect to copyrighted works, except for limited excerpts that serve the purpose of the adjudicatory filings and would constitute a Fair Use application, Participants are requested not to include copyrighted materials in their submissions.

Non-timely requests and/or petitions and contentions will not be entertained absent a determination by the Commission, the presiding officer, or the Atomic Safety and Licensing Board that the petition and/or request should be granted and/or the contentions should be admitted, based on a balancing of the factors specified in 10 CFR 2.309(c)(1)(i)–(viii).

For further details with respect to this exigent license application, see the application for amendment dated December 19, 2008, which is available

for public inspection at the Commission's Public Document Room (PDR), located at One White Flint North, Public File Area O1 F21, 11555 Rockville Pike (first floor), Rockville, Maryland. Publicly available records will be accessible electronically from the Agencywide Documents Access and Management System's (ADAMS) Public Electronic Reading Room on the Internet at the NRC Web site *http://www.nrc.gov/reading-rm.html*. Persons who do not have access to ADAMS or who encounter problems in accessing the documents located in ADAMS should contact the NRC PDR Reference staff by telephone at 1–800–397–4209, or 301–415–4737, or by e-mail to *pdr.resource@nrc.gov*.

Dated at Rockville, Maryland, this 23rd day of December 2008.

For the Nuclear Regulatory Commission.

Mohan C. Thadani,

Senior Project Manager, Plant Licensing Branch LPL IV, Division of Operating Reactor Licensing, Office of Nuclear Reactor Regulation.

[FR Doc. E8–31163 Filed 12–30–08; 8:45 am]

BILLING CODE 7590–01–P

NUCLEAR REGULATORY COMMISSION

[Docket Nos. 50–247 and 50–286]

Indian Point Nuclear Generating Unit Nos. 2 and 3; Notice of Availability of the Draft Supplement 38 to the Generic Environmental Impact Statement for License Renewal of Nuclear Plants and Public Meeting for the License Renewal of Indian Point Nuclear Generating Unit Nos. 2 and 3

Notice is hereby given that the U.S. Nuclear Regulatory Commission (NRC, Commission) has published a draft plant-specific supplement to the Generic Environmental Impact Statement for License Renewal of Nuclear Plants (GEIS), NUREG–1437, regarding the renewal of operating licenses DPR–26 and DPR–64 for an additional 20 years of operation for the Indian Point Nuclear Generating Unit Nos. 2 and 3 (IP2 and IP3). IP2 and IP3 are located in Westchester County in the village of Buchanan, New York, approximately 24 miles north of New York City. Possible alternatives to the proposed action (license renewal) include no action and reasonable alternative energy sources. Draft Supplement 38 to the GEIS is publicly available at the NRC Public Document Room (PDR), located at One White Flint North, 11555 Rockville Pike, Rockville, Maryland 20852, or from the NRC's Agencywide Documents Access and Management System (ADAMS). The ADAMS Public Electronic Reading Room is accessible at *http://adamswebsearch.nrc.gov/dologin.htm*. The Accession Numbers for draft Supplement 38 to the GEIS are ML083540594 (Volume 1, main report) and ML083540614 (Volume 2, appendices). Persons who do not have access to ADAMS, or who encounter problems in accessing the documents located in ADAMS, should contact the NRC(s PDR reference staff by telephone at 1–800–397–4209 or 301–415–4737, or by e-mail at *PDR.Resource@nrc.gov*. In addition, the White Plains Public Library (White Plains, NY), Hendrick Hudson Free Library (Montrose, NY), and the Field Library (Peekskill, NY), have agreed to make the draft supplement to the GEIS available for public inspection.

Any interested party may submit comments on the draft supplement to the GEIS for consideration by the NRC staff. To be considered, comments on the draft supplement to the GEIS and the proposed action must be received by March 18, 2009; the NRC staff is able to ensure consideration only for comments received on or before this date. Comments received after the due date will be considered only if it is practical to do so. Written comments on the draft supplement to the GEIS should be sent to: Chief, Rulemaking, Directives and Editing Branch, Division of Administrative Services, Office of Administration, Mailstop T–6D59, U.S. Nuclear Regulatory Commission, Washington, DC 20555–0001.

Comments may be hand-delivered to the NRC at 11545 Rockville Pike, Room T–6D59, Rockville, Maryland 20852, between 7:30 a.m. and 4:15 p.m. on Federal workdays. Electronic comments may be submitted to the NRC by e-mail at *IndianPoint.EIS@nrc.gov*. All comments received by the Commission, including those made by Federal, State, local agencies, Native American Tribes, or other interested persons, will be made available electronically at the Commission's PDR in Rockville, Maryland, and through ADAMS.

The NRC staff will hold a public meeting to present an overview of the draft plant-specific supplement to the GEIS and to accept public comments on the document. The public meeting will be held on February 12, 2009, at the Colonial Terrace, 119 Oregon Road, Cortlandt Manor, New York 10567. There will be two sessions to accommodate interested parties. The first session will convene at 1:30 p.m. and will continue until 4:30 p.m., as necessary. The second session will convene at 7 p.m. with a repeat of the overview portions of the meeting and will continue until 10 p.m., as necessary. Both meetings will be transcribed and will include: (1) A presentation of the contents of the draft plant-specific supplement to the GEIS, and (2) the opportunity for interested government agencies, organizations, and individuals to provide comments on the draft report. Additionally, the NRC staff will host informal discussions one hour prior to the start of each session at the same location. No comments on the draft supplement to the GEIS will be accepted during the informal discussions. To be considered, comments must be provided either at the transcribed public meeting or in writing. Persons may pre-register to present oral comments at the meeting by contacting Mr. Andrew Stuyvenberg, the NRC Environmental Project Manager at 1–800–368–5642, extension 4006, or by e-mail at *IndianPoint.EIS@nrc.gov*, no later than January 29, 2009. Members of the public may also register to provide oral comments within 15 minutes of the start of each session. Individual, oral comments may be limited by the time available, depending on the number of persons who register. If special equipment or accommodations are needed to attend or present information at the public meeting, the need should be brought to Mr. Stuyvenberg's attention no later than January 26, 2009, to provide the NRC staff adequate notice to determine whether the request can be accommodated.

FOR FURTHER INFORMATION CONTACT: Mr. Stuyvenberg, Projects Branch 2, Division of License Renewal, Office of Nuclear Reactor Regulation, U.S. Nuclear Regulatory Commission, Mail Stop O–11F1, Washington, DC 20555–0001. Mr. Stuyvenberg may be contacted at the aforementioned telephone number or e-mail address.

Dated at Rockville, Maryland, this 22nd day of December, 2008.

For the Nuclear Regulatory Commission.

David J. Wrona,

Branch Chief, Projects Branch 2, Division of License Renewal, Office of Nuclear Reactor Regulation.

[FR Doc. E8–31161 Filed 12–30–08; 8:45 am]

BILLING CODE 7590–01–P

NUCLEAR REGULATORY COMMISSION

[Docket No. 50–285]

Omaha Public Power District; Fort Calhoun Station, Unit No. 1; Environmental Assessment and Finding of No Significant Impact

The U.S. Nuclear Regulatory Commission (NRC) is considering issuance of an exemption from the requirements of Section III.G.1.b of Appendix R to Title 10 of the *Code of Federal Regulations* (10 CFR) Part 50, for Facility Operating License No. DPR–40, issued to Omaha Public Power District (OPPD, the licensee), for operation of the Fort Calhoun Station, Unit No. 1, located in Washington County, Nebraska. Therefore, as required by 10 CFR 51.21, the NRC is issuing this environmental assessment and finding of no significant impact.

Environmental Assessment

Identification of the Proposed Action

The proposed action would provide an exemption from the provisions of 10 CFR Part 50, Appendix R, Section III.G.1.b, for the 72-hour requirement to provide repair procedures and materials for cold shutdown capability for redundant cold shutdown components.

The proposed action is in accordance with the licensee's application dated February 4, 2008 (Agencywide Documents Access and Management System (ADAMS) Accession No. ML080360106), as supplemented by letter dated October 13, 2008 (ADAMS No. ML082980018).

The Need for the Proposed Action

The proposed action is needed to provide notification and clarification of the exemption granted by the NRC by letter dated July 3, 1985 (ADAMS Legacy Library Accession No. 850724390), in which the NRC granted an exemption from the technical requirements of Section III.G.2 of Appendix R to 10 CFR Part 50, for Fire Area 31 (intake structure building) and for the pull box area of the auxiliary building. The NRC safety evaluation report (SER) dated July 3, 1985, incorrectly referenced Section III.G.2 and subsequently provided exemption from 10 CFR Part 50, Section III.G. Specifically, the original SER and exemption should have referenced 10 CFR 50, Appendix R, Section III.G.1.b. In addition, cables in the duct bank and manhole vaults numbers 5 and 31 that are routed between the pull boxes and intake structure were not discussed in the OPPD exemption request dated August 30, 1983 (ADAMS Legacy Library Accession No. 830909011). Therefore, OPPD needs exemption from 10 CFR Part 50, Appendix R, III.G.1.b, for the cables in the duct bank and manhole vaults numbers 5 and 31 that are routed between the pull boxes and the intake structure building.

Environmental Impacts of the Proposed Action

The NRC has completed its safety evaluation of the proposed action and concludes that the consequences of postulated accidents are not increased, because there is no credible fire hazard in the area of the cable duct bank or manhole, which would disable all the raw water pumps and prevent the cold shutdown capability. Furthermore, if all raw water pumps are lost, due to any condition, the abnormal operating procedure directs the operator to trip the reactor and enter emergency procedures based on observed plant conditions. Therefore, there is no undue risk, since neither the probability nor the consequences have been increased, to public health and safety.

On the basis of its review and evaluation of the information provided in the licensee's exemption request and response to NRC staff request for additional information questions, the NRC staff concludes that OPPD's request for exemption from the technical requirements of Section III.G.1.b of Appendix R to 10 CFR Part 50 has provided a thorough description of the proposed change and adequate safety assessment which address the issue.

The details of the NRC staff's safety evaluation will be provided in the exemption that will be issued as part of the letter to the licensee approving the exemption to the regulation.

The proposed action will not significantly increase the probability or consequences of accidents. No changes are being made in the types of effluents that may be released offsite. There is no significant increase in the amount of any effluent released offsite. There is no significant increase in occupational or public radiation exposure. Therefore, there are no significant radiological environmental impacts associated with the proposed action.

With regard to potential non-radiological impacts, the proposed action does not have a potential to affect any historic sites. It does not affect non-radiological plant effluents and has no other environmental impact. Therefore, there are no significant non-radiological environmental impacts associated with the proposed action.

Accordingly, the NRC concludes that there are no significant environmental impacts associated with the proposed action.

Environmental Impacts of the Alternatives to the Proposed Action

As an alternative to the proposed action, the NRC staff considered denial of the proposed action (i.e., the ''no-action'' alternative). Denial of the application would result in no change in current environmental impacts. The environmental impacts of the proposed action and the alternative action are similar.

Alternative Use of Resources

The action does not involve the use of any different resources than those previously considered in the Final Environmental Statement for the Fort Calhoun Station dated August 1972.

Agencies and Persons Consulted

In accordance with its stated policy, on November 26, 2008, the NRC staff consulted with the Nebraska State official, Julia Schmitt, of the Department of Health and Human Services Regulation and Licensure, regarding the environmental impact of the proposed action. The State official had no comments.

Finding of No Significant Impact

On the basis of the environmental assessment, the NRC concludes that the proposed action will not have a significant effect on the quality of the human environment. Accordingly, the NRC has determined not to prepare an environmental impact statement for the proposed action.

For further details with respect to the proposed action, see the licensee's letter dated February 4, 2008, as supplemented by letter dated October 13, 2008. Documents may be examined, and/or copied for a fee, at the NRC's Public Document Room (PDR), located at One White Flint North, Public File Area O1 F21, 11555 Rockville Pike (first floor), Rockville, Maryland. Publicly available records will be accessible electronically from the Agencywide Documents Access and Management System (ADAMS) Public Electronic Reading Room on the Internet at the NRC Web site, *http://www.nrc.gov/reading-rm/adams.html.* Persons who do not have access to ADAMS or who encounter problems in accessing the documents located in ADAMS should contact the NRC PDR Reference staff by telephone at 1–800–397–4209 or 301–415–4737, or send an e-mail to *pdr.resource@nrc.gov.*

Dated at Rockville, Maryland, this 23rd day of December 2008.

For the Nuclear Regulatory Commission.

Carl F. Lyon,

Project Manager, Plant Licensing Branch IV, Division of Operating Reactor Licensing, Office of Nuclear Reactor Regulation.

[FR Doc. E8–31162 Filed 12–30–08; 8:45 am]

BILLING CODE 7590–01–P

OFFICE OF THE UNITED STATES TRADE REPRESENTATIVE

[Docket No. WTO/DS382/1]

WTO Dispute Settlement Proceeding Regarding United States—Anti-Dumping Administrative Reviews and Other Measures Related to Imports of Certain Orange Juice From Brazil

AGENCY: Office of the United States Trade Representative.

ACTION: Notice; request for comments.

SUMMARY: The Office of the United States Trade Representative (''USTR'') is providing notice that on November 27, 2008, Brazil requested consultations with the United States under the *Marrakesh Agreement Establishing the World Trade Organization* (''WTO Agreement'') concerning the antidumping duty administrative review on certain orange juice from Brazil (Department of Commerce Case No. A–351–840) and various U.S. laws, regulations, administrative procedures, practices, and methodologies. That request may be found at *www.wto.org* contained in a document designated as WT/DS382/1. USTR invites written comments from the public concerning the issues raised in this dispute.

DATES: Although USTR will accept any comments received during the course of the dispute settlement proceedings, comments should be submitted on or before January 26 to be assured of timely consideration by USTR.

ADDRESSES: Public comments should be submitted electronically to *www.regulations.gov,* docket number USTR–2008–44. If you are unable to provide submissions by *www.regulations.gov,* please contact Sandy McKinzy at (202) 395–9483 to arrange for an alternative method of transmission. If (as explained below) the comment contains confidential information, then the comment should be submitted by fax only to Sandy McKinzy at (202) 395—3640.

FOR FURTHER INFORMATION CONTACT: Leigh Bacon, Associate General Counsel, Office of the United States Trade Representative, 600 17th Street, NW., Washington, DC 20508, (202) 395–5859.

SUPPLEMENTARY INFORMATION: USTR is providing notice that consultations have been requested pursuant to the WTO *Understanding on Rules and Procedures Governing the Settlement of Disputes* (''DSU''). If such consultations should fail to resolve the matter and a dispute settlement panel is established pursuant to the DSU, such panel, which would hold its meetings in Geneva, Switzerland, would be expected to issue a report on its findings and recommendations within nine months after it is established.

Major Issues Raised by Brazil

On November 27, 2008, Brazil requested consultations regarding the antidumping duty administrative review on certain orange juice from Brazil, referring in particular to the use of ''zeroing'' in that review. Brazil challenges (1) the determination by the Department of Commerce in *Certain Orange Juice from Brazil: Final Results and Partial Rescission of Antidumping Administrative Review* (A–351–840), 73 FR 46584 (Aug. 11, 2008), covering the period of August 24, 2005, through February 28, 2007, and assessment instructions and cash deposit requirements issued pursuant thereto; (2) the determinations of the Department of Commerce in any ongoing or future antidumping duty administrative reviews in that case, the final results thereof, and assessment instructions and cash deposit requirements issued pursuant thereto; and (3) any actions taken by Customs and Border Protection to collect definitive anti-dumping duties at assessment rates established in the administrative reviews in that case, including the issuance of liquidation instructions and notices. Brazil also challenges various U.S. laws, regulations, administrative procedures, practices, and methodologies: (1) The Tariff Act of 1930, as amended, in particular sections 736, 751, 771(35)(A) and (B), and 777A(c) and (d) (19 U.S.C. 1673e, 1675, 1677(35)(A) and (B), and 1677f(c) and (d)); (2) the Statement of Administrative Action accompanying the Uruguay Round Agreements Act, H.R. Doc. No. 103–316 (1994), *reprinted in* 1994 U.S.C.C.A.N. 4040; (3) Department of Commerce regulations set forth in part 351 of Title 19 of the Code of Federal Regulations, in particular sections 351.212(b) and 351.414(c) and (e); (4) the Import Administration Antidumping Manual (1997 ed.), including the computer programs referenced therein; and (5) the use of ''zeroing'' procedures and methodologies in antidumping administrative reviews.

Brazil alleges that these laws, regulations, administrative procedures, practices, and methodologies are, as such and as applied in the Department of Commerce determinations and actions by Customs and Border Protection in the orange juice administrative review, inconsistent with Articles II, VI:1, and VI:2 of the *General Agreement on Tariffs and Trade 1994,* Articles 1, 2.1, 2.4, 2.4.2, 9.1, 9.3, 11.2, and 18.4 of the *Agreement on Implementation of Article VI of the General Agreement on Tariffs and Trade 1994* (the Anti-Dumping Agreement); and Article XVI:4 of the WTO Agreement.

Public Comment: Requirements for Submissions

Interested persons are invited to submit written comments concerning the issues raised in this dispute. Persons may submit public comments electronically to *www.regulations.gov* docket number USTR–2008–44. If you are unable to provide submissions by *www.regulations.gov,* please contact Sandy McKinzy at (202) 395–9483 to arrange for an alternative method of transmission.

To submit comments via *www.regulations.gov,* enter docket number USTR–2008–44 on the home page and click ''go.'' The site will provide a search-results page listing all documents associated with this docket. Find a reference to this notice by selecting ''Notice'' under ''Document Type'' on the left side of the search-results page, and click on the link entitled ''Send a Comment or Submission.'' (For further information on using the *www.regulations.gov* Web site, please consult the resources provided on the Web site by clicking on ''How to Use This Site'' on the left side of the home page.)

The *www.regulations.gov* site provides the option of providing comments by filling in a ''General Comments'' field, or by attaching a document. It is expected that most comments will be provided in an attached document. If a document is attached, it is sufficient to type ''*See* attached'' in the ''General Comments'' field.

A person requesting that information contained in a comment submitted by that person be treated as confidential business information must certify that such information is business confidential and would not customarily be released to the public by the submitter. Confidential business information must be clearly designated as such and the submission must be marked ''BUSINESS CONFIDENTIAL''

at the top and bottom of the cover page and each succeeding page. Any comment containing business confidential information must be submitted by fax to Sandy McKinzy at (202) 395–3640. A non-confidential summary of the confidential information must be submitted to *www.regulations.gov.* The non-confidential summary will be placed in the docket and open to public inspection.

Information or advice contained in a comment submitted, other than business confidential information, may be determined by USTR to be confidential in accordance with section 135(g)(2) of the Trade Act of 1974 (19 U.S.C. 2155(g)(2)). If the submitter believes that information or advice may qualify as such, the submitter—

(1) Must clearly so designate the information or advice;

(2) Must clearly mark the material as ''SUBMITTED IN CONFIDENCE'' at the top and bottom of the cover page and each succeeding page; and

(3) Must provide a non-confidential summary of the information or advice.

Any comment containing confidential information must be submitted by fax. A non-confidential summary of the confidential information must be submitted to *www.regulations.gov.* The non-confidential summary will be placed in the docket and open to public inspection.

USTR will maintain a docket on this dispute settlement proceeding, accessible to the public. The public file will include non-confidential comments received by USTR from the public with respect to the dispute; if a dispute settlement panel is convened or in the event of an appeal from such a panel, the U.S. submissions, any non-confidential submissions, or non-confidential summaries of submissions, received from other participants in the dispute; the report of the panel; and, if applicable, the report of the Appellate Body.

Comments will be placed in the docket and open to public inspection pursuant to 15 CFR 2006.13, except confidential business information exempt from public inspection in accordance with 15 CFR 2006.15 or information determined by USTR to be confidential in accordance with 19 U.S.C. 2155(g)(2). Comments open to public inspection may be viewed on the *www.regulations.gov* Web site.

Daniel Brinza,

Assistant United States Trade Representative for Monitoring and Enforcement.

[FR Doc. E8–31171 Filed 12–30–08; 8:45 am]

BILLING CODE 3190–W9–P

OFFICE OF THE UNITED STATES TRADE REPRESENTATIVE

[Docket No. WTO/DS383]

WTO Dispute Settlement Proceeding Regarding United States—Antidumping Measures on Polyethylene Retail Carrier Bags From Thailand

AGENCY: Office of the United States Trade Representative.

ACTION: Notice; request for comments.

SUMMARY: The Office of the United States Trade Representative (''USTR'') is providing notice that on November 26, 2008, Thailand requested consultations with the United States under the *Marrakesh Agreement Establishing the World Trade Organization* (''WTO Agreement'') concerning certain issues relating to the imposition of antidumping measures on polyethylene retail carrier bags from Thailand. That request may be found at *http://www.wto.org* contained in a document designated as WT/DS383/1. USTR invites written comments from the public concerning the issues raised in this dispute.

DATES: Although USTR will accept any comments received during the course of the dispute, comments should be submitted on or before January 30, 2009 to be assured of timely consideration by USTR.

ADDRESSES: Comments should be submitted (i) electronically to *www.regulations.gov,* docket number USTR–2008–0043. If you are unable to provide submissions by *www.regulations.gov,* please contact Sandy McKinzy at (202) 395–9483 to arrange for an alternative method of transmission. If (as explained below) the comment contains confidential information, then the comment should be submitted by fax only to Sandy McKinzy at (202) 395–3640.

FOR FURTHER INFORMATION CONTACT: Elissa Alben, Assistant General Counsel, Office of the United States Trade Representative, 600 17th Street, NW., Washington, DC 20508, (202) 395–3150.

SUPPLEMENTARY INFORMATION: USTR is providing notice that consultations have been requested pursuant to the WTO *Understanding on Rules and Procedures Governing the Settlement of Disputes* (''DSU''). If such consultations should fail to resolve the matter and a dispute settlement panel is established pursuant to the DSU, such panel, which would hold its meetings in Geneva, Switzerland, would be expected to issue a report on its findings and recommendations within nine months after it is established.

Major Issues Raised by Thailand

On November 26, 2008, Thailand requested consultations regarding antidumping measures on polyethylene retail carrier bags from Thailand. Thailand challenges the use of what it describes as ''the practice of 'zeroing' negative anti-dumping margins in calculating overall weighted-average margins of dumping'' in the Department of Commerce's final and amended final determinations and antidumping duty order with respect to polyethylene retail carrier bags from Thailand.[1] Thailand states that it considers this action to be inconsistent with the obligations of the United States under Article VI of the *General Agreement on Tariffs and Trade 1994* (''GATT 1994''), and, in particular, under Article 2.4.2 of the *Agreement on Implementation of Article VI of the GATT 1994.*

Public Comment: Requirements for Submissions

Interested persons are invited to submit written comments concerning the issues raised in this dispute. Persons may submit public comments electronically to *www.regulations.gov* docket number USTR–2008–0043. If you are unable to provide submissions by *www.regulations.gov,* please contact Sandy McKinzy at (202) 395–9483 to arrange for an alternative method of transmission.

To submit comments via *www.regulations.gov,* enter docket number USTR–2008–0043 on the home page and click ''go''. The site will provide a search-results page listing all documents associated with this docket. Find a reference to this notice by selecting ''Notice'' under ''Document Type'' on the left side of the search-results page, and click on the link entitled ''Send a Comment or Submission.'' (For further information on using the *www.regulations.gov* Web site, please consult the resources provided on the Web site by clicking on ''How to Use This Site'' on the left side of the home page.) The *www.regulations.gov* site provides the option of providing comments by filling in a ''General Comments'' field, or by attaching a document. It is expected that most comments will be provided in an

[1] *See Notice of Final Determination of Sales at Less Than Fair Value: Polyethylene Retail Carrier Bags from Thailand,* 69 FR 34122 (June 18, 2004), *Notice of Amended Final Determination of Sales at Less Than Fair Value: Polyethylene Retail Carrier Bags from Thailand,* 69 FR 42419 (July 15, 2004), *Antidumping Duty Order: Polyethylene Retail Carrier Bags from Thailand,* 69 FR 48204, 9 August 2004.

attached document. If a document is attached, it is sufficient to type ''See attached'' in the ''General Comments'' field.

A person requesting that information contained in a comment submitted by that person be treated as confidential business information must certify that such information is business confidential and would not customarily be released to the public by the submitter. Confidential business information must be clearly designated as such and the submission must be marked ''BUSINESS CONFIDENTIAL'' at the top and bottom of the cover page and each succeeding page. Any comment containing business confidential information must be submitted to Sandy McKinzy at (202) 395–3640. A non-confidential summary of the confidential information must be submitted to *www.regulations.gov.* The non-confidential summary will be placed in the docket and open to public inspection.

Information or advice contained in a comment submitted, other than business confidential information, may be determined by USTR to be confidential in accordance with section 135(g)(2) of the Trade Act of 1974 (19 U.S.C. 2155(g)(2)). If the submitter believes that information or advice may qualify as such, the submitter—

(1) Must clearly so designate the information or advice;

(2) Must clearly mark the material as ''SUBMITTED IN CONFIDENCE'' at the top and bottom of the cover page and each succeeding page; and

(3) Must provide a non-confidential summary of the information or advice.

Any comment containing confidential information must be submitted by fax. A non-confidential summary of the confidential information must be submitted to *www.regulations.gov.* The non-confidential summary will be placed in the docket and open to public inspection.

USTR will maintain a docket on this dispute settlement proceeding, accessible to the public. The public file will include non-confidential comments received by USTR from the public with respect to the dispute; if a dispute settlement panel is convened or in the event of an appeal from such a panel, the U.S. submissions, any non-confidential submissions, or non-confidential summaries of submissions, received from other participants in the dispute; the report of the panel; and, if applicable, the report of the Appellate Body.

Comments will be placed in the docket and open to public inspection pursuant to 15 CFR 2006.13, except confidential business information exempt from public inspection in accordance with 15 CFR 2006.15 or information determined by USTR to be confidential in accordance with 19 U.S.C. 2155(g)(2). Comments open to public inspection may be viewed on the *www.regulations.gov* Web site by entering docket number USTR–2008–0043 in the search field on the home page.

Daniel Brinza,

Assistant United States Trade Representative for Monitoring and Enforcement.

[FR Doc. E8–31172 Filed 12–30–08; 8:45 am]

BILLING CODE 3190–W9–P

OFFICE OF THE UNITED STATES TRADE REPRESENTATIVE

[Docket No. WTO/DS379]

WTO Dispute Settlement Proceeding Regarding United States—Definitive Anti-Dumping and Countervailing Duties on Certain Products From China

AGENCY: Office of the United States Trade Representative.

ACTION: Notice; request for comments.

SUMMARY: The Office of the United States Trade Representative (''USTR'') is providing notice that on December 9, 2008, the People's Republic of China (''China'') requested the establishment of a dispute settlement panel under the *Marrakesh Agreement Establishing the World Trade Organization* (''WTO Agreement'') concerning final anti-dumping and countervailing duty determinations and orders by the Department of Commerce on imports of the following products from China: Circular Welded Carbon Quality Steel Pipe (Investigations A–570–910 and C–570–911); Certain New Pneumatic Off-the-Road Tires (Investigations A–570–912 and C–570–913); Light-Walled Rectangular Pipe and Tube (Investigations A–570–914 and C–570–915); and Laminated Woven Sacks (Investigations A–570–916 and C–570–917). That request may be found at www.wto.org contained in a document designated as WT/DS379/2. USTR invites written comments from the public concerning the issues raised in this dispute.

DATES: Although USTR will accept any comments received during the course of the dispute settlement proceedings, comments should be submitted on or before February 20, 2009 to be assured of timely consideration by USTR.

ADDRESSES: Public comments should be submitted electronically to *www.regulations.gov,* docket number USTR–2008–0035. If you are unable to provide submissions by *www.regulations.gov,* please contact Sandy McKinzy at (202) 395–9483 to arrange for an alternative method of transmission. If (as explained below) the comment contains confidential information, then the comment should be submitted by fax only to Sandy McKinzy at (202) 395–3640.

FOR FURTHER INFORMATION CONTACT: Arun Venkataraman, Associate General Counsel, Office of the United States Trade Representative, 600 17th Street, NW., Washington, DC 20508, (202) 395–5694.

SUPPLEMENTARY INFORMATION: Section 127(b) of the Uruguay Round Agreements Act (URAA) (19 U.S.C. 3537(b)(1)) requires that notice and opportunity for comment be provided after the United States submits or receives a request for the establishment of a WTO dispute settlement panel. Consistent with this obligation, USTR is providing notice that the establishment of a dispute settlement panel has been requested pursuant to the WTO *Understanding on Rules and Procedures Governing the Settlement of Disputes* (''DSU'') in this dispute. If such a panel is established pursuant to the DSU, such panel, which would hold its meetings in Geneva, Switzerland, would be expected to issue a report on its findings and recommendations within nine months after it is established.

Major Issues Raised by China

In its December 9, 2008 panel request, China makes a number of allegations concerning the Department of Commerce's final antidumping and countervailing duty determinations and orders regarding the following products from China: Circular Welded Carbon Quality Steel Pipe (Investigations A–570–910 and C–570–911); Certain New Pneumatic Off-the-Road Tires (Investigations A–570–912 and C–570–913); Light-Walled Rectangular Pipe and Tube (Investigations A–570–914 and C–570–915); and Laminated Woven Sacks (Investigations A–570–916 and C–570–917). These final determinations and orders are available at the following Web pages of the Department of Commerce: *http://ia.ita.doc.gov/frn/0806frn/index.html#CHINA, http://ia.ita.doc.gov/frn/0807frn/index.html#CHINA, http://ia.ita.doc.gov/frn/0808frn/index.html#CHINA, http://ia.ita.doc.gov/frn/0809frn/index.html#CHINA.*

With respect to certain of the aforementioned determinations, China

alleges that the Department of Commerce acted inconsistently with particular provisions of the *General Agreement on Tariffs and Trade 1994,* WTO Agreement on Anti-Dumping (''Anti-Dumping Agreement''), and *Agreement on Subsidies and Countervailing Measures* (''SCM Agreement'') when allegedly it (I) erroneously concluded that certain State-owned enterprises are ''public bodies,'' (ii) failed to determine whether such enterprises had been ''entrusted or directed'' to provide a ''financial contribution,'' (iii) erroneously concluded that a ''benefit'' had been conferred, and (iv) failed to demonstrate ''specificity.''

China also alleges that the United States acted inconsistently with particular provisions of the Anti-Dumping Agreement and SCM Agreement in connection with the Department of Commerce's use of a non-market economy (NME) methodology for the purpose of determining the existence and amount of alleged dumping under Article VI of the GATT 1994 and the AD Agreement, simultaneously with the determination of subsidization and imposition of countervailing duties on the same subject merchandise.

Finally, China alleges actions inconsistent with the Anti-Dumping Agreement and the SCM Agreement in connection with the Department of Commerce's conduct of the underlying anti-dumping and countervailing duty investigations, including its failure to inform interested parties of certain issues and the use of adverse inferences and facts available.

Public Comment: Requirements for Submissions

Interested persons are invited to submit written comments concerning the issues raised in this dispute. Persons may submit public comments electronically to *www.regulations.gov,* docket number USTR–2008–0035. If you are unable to provide submissions by *www.regulations.gov,* please contact Sandy McKinzy at (202) 395–9483 to arrange for an alternative method of transmission.

To submit comments via *www.regulations.gov,* enter docket number USTR–2008–0035 on the home page and click ''go''. The site will provide a search-results page listing all documents associated with this docket. Find a reference to this notice by selecting ''Notice'' under ''Document Type'' on the left side of the search-results page, and click on the link entitled ''Send a Comment or Submission.'' (For further information on using the *www.regulations.gov* Web site, please consult the resources provided on the Web site by clicking on ''How to Use This Site'' on the left side of the home page.)

The *www.regulations.gov* site provides the option of providing comments by filling in a ''General Comments'' field, or by attaching a document. It is expected that most comments will be provided in an attached document. If a document is attached, it is sufficient to type ''*See* attached'' in the ''General Comments'' field.

A person requesting that information contained in a comment submitted by that person be treated as confidential business information must certify that such information is business confidential and would not customarily be released to the public by the submitter. Confidential business information must be clearly designated as such and the submission must be marked ''BUSINESS CONFIDENTIAL'' at the top and bottom of the cover page and each succeeding page. Any comment containing business confidential information must be submitted by fax to Sandy McKinzy at (202) 395–3640. A non-confidential summary of the confidential information must be submitted to *www.regulations.gov.* The non-confidential summary will be placed in the docket and open to public inspection.

Information or advice contained in a comment submitted, other than business confidential information, may be determined by USTR to be confidential in accordance with section 135(g)(2) of the Trade Act of 1974 (19 U.S.C. 2155(g)(2)). If the submitter believes that information or advice may qualify as such, the submitter—

(1) Must clearly so designate the information or advice;

(2) Must clearly mark the material as ''SUBMITTED IN CONFIDENCE'' at the top and bottom of the cover page and each succeeding page; and

(3) Must provide a non-confidential summary of the information or advice.

Any comment containing confidential information must be submitted by fax. A non-confidential summary of the confidential information must be submitted to *www.regulations.gov.* The non-confidential summary will be placed in the docket and open to public inspection.

USTR will maintain a docket on this dispute settlement proceeding, accessible to the public. The public file will include non-confidential comments received by USTR from the public with respect to the dispute; if a dispute settlement panel is convened or in the event of an appeal from such a panel, the U.S. submissions, any non-confidential submissions, or non-confidential summaries of submissions, received from other participants in the dispute; the report of the panel; and, if applicable, the report of the Appellate Body. Comments will be placed in the docket and open to public inspection pursuant to 15 CFR 2006.13, except confidential business information exempt from public inspection in accordance with 15 CFR 2006.15 or information determined by USTR to be confidential in accordance with 19 U.S.C. 2155(g)(2). Comments open to public inspection may be viewed on the *www.regulations.gov* Web site by entering docket number USTR–2008–0035 in the search field on the home page.

Daniel Brinza,

Assistant United States Trade Representative for Monitoring and Enforcement.

[FR Doc. E8–31170 Filed 12–30–08; 8:45 am]

BILLING CODE 3190–W9–P

OFFICE OF PERSONNEL MANAGEMENT

[OMB Control No. 3206–0005]

Submission for OMB Review; Comment Request for Revised Information Collection; Questionnaire for Non-Sensitive Positions, Standard Form 85 (SF 85); Questionnaire for Public Trust Positions, Standard Form 85P (SF 85P); Supplemental Questionnaire for Selected Positions, Standard Form 85PS (SF 85PS); Questionnaire for National Security Positions, Standard Form 86 (Sf 86); Continuation Sheet for Questionnaires SF 85, 85P, and 86, Standard Form 86a (Sf 86a); and Certification Statement for SF 86 (SF 86C)

AGENCY: Office of Personnel Management.

ACTION: Notice.

SUMMARY: In accordance with the Paperwork Reduction Act of 1995 (Pub. L. 104–13), this notice announces that the Office of Personnel Management (OPM) submitted to the Office of Management and Budget a request for review and clearance of the revised collection of information, Questionnaires for National Security, Public Trust, and Non-Sensitive Positions (OMB Control No. 3206–0005), which includes the following electronic, on-line collection instruments:

• Questionnaire for Non-Sensitive Positions, Standard Form 85 (SF 85);
• Questionnaire for Public Trust Positions, Standard Form 85P (SF 85P); and
• Questionnaire for National Security Positions, Standard Form 86 (SF 86).

This notice also announces that the Office of Personnel Management (OPM) submitted to the Office of Management and Budget a request to discontinue clearance of the Continuation Sheet for Questionnaires SF 85, 85P, and 86, Standard Form 86A (SF 86A), the Certification Statement for SF 86, Standard Form SF 86C (SF 86C); and the Supplemental Questionnaire for Selected Positions, Standard Form 85PS (SF 85PS), which were formerly included in the collection (OMB Control No. 3206–0005).

These information collections are completed by respondents for, or incumbents of, Government positions or positions for the Government under contract, or by military personnel. The collections are used as the basis for background investigations to establish that such persons are:
• Suitable for employment or retention in the position;
• Suitable for employment or retention in a public trust position;
• Suitable for employment or retention in a national security position; and
• Eligible for access to classified national security information.

We are discontinuing request for clearance of the SF 86A, SF 86C, and SF 85PS, and propose that these collections be eliminated. The SF 86A is currently used as a continuation of the form with which its use is associated and not for any unique purpose exclusive from the associated form. It is proposed that the SF 86A be eliminated as it is not necessary when e-QIP is used. Additionally, GSA has requested that the Standard Forms be available to customers in electronic format only. They will no longer be stocking the paper forms. The SF 86C is currently used in lieu of completing a new SF 86 to allow the individual to indicate that there have been no changes in the data provided on the most recently filed SF 86 or to allow the individual to easily provide new or changed information. The electronic format of the proposed SF 86 eliminates the need for a separate SF 86C. It is proposed that the SF 85PS be eliminated because the questions formerly on the SF 85PS now reside on the SF 85P.

The SF 85, SF 85P, and SF 86 are completed by both employees of the Federal Government and individuals not employed with the Federal Government, to include Federal and military contractors. Federal employees are defined as those individuals who are employed as civilian or military personnel with the Federal Government. Non-Federal employees include members of the general public and all individuals employed as Federal and military contractors or individuals otherwise not directly employed by the Federal Government.

It is estimated that 47,700 non-Federal individuals will complete the SF 85 annually. Each form takes approximately 100 minutes to complete. The estimated annual public burden is 79,500 hours.

It is estimated that 98,700 non-Federal individuals will complete the SF 85P annually. Each form takes approximately 150 minutes to complete. The estimated annual burden is 246,750 hours.

It is estimated that 21,800 non-Federal individuals will complete the SF 86 annually. Each form takes approximately 150 minutes to complete. The estimated annual burden is 54,500 hours.

e-QIP (Electronic Questionnaires for Investigations Processing) is a web-based system application that currently houses electronic versions of the SF 85, SF 85P, and SF 86. This internet data collection tool provides faster processing time and immediate data validation to ensure accuracy of the respondent's personal information. The e-Government initiative mandates that agencies utilize e-QIP for all investigations and reinvestigations.

A variable in assessing burden hours is the nature of the electronic application. The electronic application includes branching questions and instructions which provide for a tailored collection from the respondent based on varying factors in the respondent's personal history. The burden on the respondent is reduced when the respondent's personal history is not relevant to a particular question, since the question branches, or expands for additional details, only for those persons who have pertinent information to provide regarding that line of questioning. As such, the burden on the respondent will vary depending on whether the information collection relates to the respondent's personal history.

Additionally, once entered, a respondent's complete and certified investigative data remains secured in the e-QIP system until the next time the respondent is sponsored by an agency to complete a new investigative form. Upon initiation, the respondent's previously entered data (except 'yes/no' questions) will populate a new investigative request and the respondent will be allowed to update their information and certify the data. In this instance, time to complete the form is reduced significantly.

The 60-day **Federal Register** Notice was published June 23, 2008 (Volume 73, Number 121, pages 35421–35422). The following Federal agencies or agency organizations made comments during the public comment period: Social Security Administration, Joint Security and Suitability Reform Team, Department of Housing and Urban Development, Department of Health and Human Services, U.S. Agency for International Development, Department of Homeland Security, Central Intelligence Agency, Department of Transportation, Office of the Director of National Intelligence, Department of State, Department of State Mental Health Services, Federal Bureau of Investigation, Defense Personnel Security Research Center, Department of Energy, and internal commentators from the U.S. Office of Personnel Management (OPM). The vast majority of comments were from OPM internal commentators and focused on administrative issues related to the formatting of the instructions and questions on the former paper collection. Most comments from other agencies focused on changes to the collection of mental health treatment information relative to treatment resulting from service in a military combat environment.

Comments which most substantially affected the proposed revisions of the SF 85P and SF 86 were considered in light of the intent of Executive Order 13467 to align using consistent standards to the extent possible policies and procedures relating to suitability, contractor employee fitness, eligibility to hold a sensitive position, access to federally controlled facilities and information systems, and eligibility for access to classified information. As a result of reforms to investigative processes, the SF 85, SF 85P, and SF 86 were expanded to collect from the respondent more accurate and relevant information that is of investigative and adjudicative significance earlier in the investigative process, thus increasing the length of the collections. As a result of public comment, significant and substantial changes were made to the SF 85, SF 85P, and SF 86. Such changes to the SF 85 include revision to questions 9, 10, 17, 18, 21, and the addition of new questions 19, 20, and 22. These question numbers reflect renumbering to accommodate the addition of new areas of questioning. Changes to the SF

85P include revisions to questions 9, 10, 15, 17b, 18, 20c, 22, 23, 24, 25, 26 and the addition of questions 19, 20a, 20b, 21, 27, 28, and 29. Changes to the SF 86 include revisions to questions 19, 20a, 20b, 20c, 21, 22, 23, 24, and 29. Due to the extensive nature of the comments, they have been consolidated in a matrix and are available upon request.

For copies of this proposal, contact Mary-Kay Brewer on 703–305–1002, Fax 703–603–0576, or e-mail at *marykay.brewer@opm.gov.* Please be sure to include a mailing address with your request.

DATES: Comments on this proposal should be received within 30 calendar days from the date of this publication.

ADDRESSES: Send or deliver comments to: Kathy Dillaman, Associate Director, Federal Investigative Services Division, U.S. Office of Personnel Management, 1900 E Street, NW., Room 5416, Washington, DC 20415, *SFRevisionComments@opm.gov*; and John W. Barkhamer, Desk Officer, Office of Information and Regulatory Affairs, Office of Management and Budget, New Executive Office Building, 725 17th Street, NW., Room 10235, Washington, DC 20503.

FOR INFORMATION REGARDING ADMINISTRATIVE COORDINATION CONTACT: Mary-Kay Brewer, Program Analyst, Operational Policy Group, Federal Investigative Services Division, U.S. Office of Personnel Management, 703–305–1002.

Michael W. Hager,

Acting Director.

[FR Doc. E8–31144 Filed 12–30–08; 8:45 am]

BILLING CODE 6325–53–P

SECURITIES AND EXCHANGE COMMISSION

Submission for OMB Review; Comment Request

Upon written request, copies available from: Securities and Exchange Commission, Office of Investor Education and Advocacy, Washington, DC 20549–0213.

Extension: Rule 3a–8; SEC File No. 270–516; OMB Control No. 3235–0574.

Notice is hereby given that pursuant to the Paperwork Reduction Act of 1995 (44 U.S.C. 3501 *et seq.*), the Securities and Exchange Commission (''Commission'') has submitted to the Office of Management and Budget a request for extension of the previously approved collection of information discussed below.

Rule 3a–8 (17 CFR 270.3a–8) of the Investment Company Act of 1940 (15 U.S.C. 80a) (the ''Act''), serves as a nonexclusive safe harbor from investment company status for certain research and development companies (''R&D companies'').

The rule requires that the board of directors of an R&D company seeking to rely on the safe harbor adopt an appropriate resolution evidencing that the company is primarily engaged in a non-investment business and record that resolution contemporaneously in its minute books or comparable documents.[1] An R&D company seeking to rely on the safe harbor must retain these records only as long as such records must be maintained in accordance with state law.

Rule 3a–8 contains an additional requirement that is also a collection of information within the meaning of the PRA. The board of directors of a company that relies on the safe harbor under rule 3a–8 must adopt a written policy with respect to the company's capital preservation investments. We expect that the board of directors will base its decision to adopt the resolution discussed above, in part, on investment guidelines that the company will follow to ensure its investment portfolio is in compliance with the rule's requirements.

The collection of information imposed by rule 3a–8 is voluntary because the rule is an exemptive safe harbor, and therefore, R&D companies may choose whether or not to rely on it. The purposes of the information collection requirements in rule 3a–8 are to ensure that: (i) the board of directors of an R&D company is involved in determining whether the company should be considered an investment company and subject to regulation under the Act, and (ii) adequate records are available for Commission review, if necessary. Rule 3a–8 would not require the reporting of any information or the filing of any documents with the Commission.

Commission staff estimates that there is no annual recordkeeping burden associated with the rule's requirements. Nevertheless, the Commission requests authorization to maintain an inventory of one burden hour for administrative purposes.

Commission staff estimates that approximately 500 R&D companies may rely on rule 3a–8. Given that the board resolutions and investment guidelines will generally need to be adopted only once (unless relevant circumstances change),[2] the Commission believes that all the companies that rely on rule 3a–8 adopted their board resolutions and established written investment guidelines in 2003 when the rule was adopted. We expect that newly formed R&D companies would adopt the board resolution and investment guidelines simultaneously with their formation documents in the ordinary course of business.[3] Therefore, we estimate that rule 3a–8 will not create additional time burdens.

An agency may not conduct or sponsor, and a person is not required to respond to a collection of information unless it displays a currently valid control number.

Please direct general comments regarding the above information to the following persons: (i) Desk Officer for the Securities and Exchange Commission, Office of Management and Budget, Room 10102, New Executive Office Building, Washington, DC 20503 or send an email to: *Shagufta_Ahmed@omb.eop.gov* ; and (ii) Charles Boucher Director/CIO, Securities and Exchange Commission, C/O Shirley Martinson, 6432 General Green Way, Alexandria, VA 22312; or send an e-mail to: *PRA_Mailbox@sec.gov*. Comments must be submitted to OMB within 30 days of this notice.

Dated: December 22, 2008.

Florence E. Harmon,

Acting Secretary.

[FR Doc. E8–31085 Filed 12–30–08; 8:45 am]

BILLING CODE 8011–01–P

SECURITIES AND EXCHANGE COMMISSION

Submission for OMB Review; Comment Request

Upon written request, copies available from: U.S. Securities and Exchange Commission, Office of Investor Education and Advocacy, Washington, DC 20549–0213.

Extension: Rule 12d2–1; OMB Control No. 3235–0081; SEC File No. 270–98.

Notice is hereby given that pursuant to the Paperwork Reduction Act of 1995

[1] Rule 3a–8(a)(6) (17 CFR 270.3a–8(6)).

[2] In the event of changed circumstances, the Commission believes that the board resolution and investment guidelines will be amended and recorded in the ordinary course of business and would not create additional time burdens.

[3] In order for these companies to raise sufficient capital to fund their product development stage, we believe they will need to present potential investors with investment guidelines. Investors would want to be assured that the company's funds are invested consistent with the goals of capital preservation and liquidity.

(44 U.S.C. 3501 *et seq.*), the Securities and Exchange Commission (''Commission'') has submitted to the Office of Management and Budget a request for extension of the previously approved collections of information for the following rule: Rule 12d2–1 (17 CFR 240.12d2–1).

On February 12, 1935, the Commission adopted Rule 12d2–1,[1] under the Securities Exchange Act of 1934 (15 U.S.C. 78a *et seq.*) (''Act''), which sets forth the conditions and procedures under which a security may be suspended from trading under Section 12(d) of the Act.[2] Rule 12d2–1 provides the procedures by which a national securities exchange may suspend from trading a security that is listed and registered on the exchange. Under Rule 12d2–1, an exchange is permitted to suspend from trading a listed security in accordance with its rules, and must promptly notify the Commission of any such suspension, along with the effective date and the reasons for the suspension.

Any such suspension may be continued until such time as the Commission may determine that the suspension is designed to evade the provisions of Section 12(d) of the Act and Rule 12d2–2 thereunder.[3] During the continuance of such suspension under Rule 12d2–1, the exchange is required to notify the Commission promptly of any change in the reasons for the suspension. Upon the restoration to trading of any security suspended under Rule 12d2–1, the exchange must notify the Commission promptly of the effective date of such restoration.

The trading suspension notices serve a number of purposes. First, they inform the Commission that an exchange has suspended from trading a listed security or reintroduced trading in a previously suspended security. They also provide the Commission with information necessary for it to determine that the suspension has been accomplished in accordance with the rules of the exchange, and to verify that the exchange has not evaded the requirements of Section 12(d) of the Act and Rule 12d2–2 thereunder by improperly employing a trading suspension. Without Rule 12d2–1, the Commission would be unable to fully implement these statutory responsibilities.

There are ten national securities exchanges that are subject to Rule 12d2–1. The burden of complying with Rule 12d2–1 is not evenly distributed among the exchanges, however, since there are many more securities listed on the New York Stock Exchange, Inc., the NASDAQ Stock Exchange, and the American Stock Exchange LLC than on the other exchanges.[4] However, for purposes of this filing, the Commission staff has assumed that the number of responses is evenly divided among the exchanges. There are approximately 1,500 responses under Rule 12d2–1 for the purpose of suspension of trading from the national securities exchanges each year, the resultant aggregate annual reporting hour burden would be, assuming on average one-half reporting hour per response, 750 annual burden hours for all exchanges. The related costs associated with these burden hours are $41,625.00.

The collection of information obligations imposed by Rule 12d2–1 are mandatory. The response will be available to the public and will not be kept confidential.

An agency may not conduct or sponsor, and a person is not required to respond to, a collection of information unless it displays a currently valid control number.

Comments should be directed to (i) Desk Officer for the Securities and Exchange Commission, Office of Information and Regulatory Affairs, Office of Management and Budget, Room 10102, New Executive Office Building, Washington, DC 20503 or by sending an e-mail to: *Shagufta_Ahmed@omb.eop.gov*); and (ii) Charles Boucher Director/Chief Information Officer, Securities and Exchange Commission, c/o Shirley Martinson, 6432 General Green Way, Alexandria, VA 22312 or send an e-mail to: *PRA_Mailbox@sec.gov*. Comments must be submitted within 30 days of this notice.

Dated: December 22, 2008.

Florence E. Harmon,

Acting Secretary.

[FR Doc. E8–31092 Filed 12–30–08; 8:45 am]

BILLING CODE 8011–01–P

[1] *See* Securities Exchange Act Release No. 98 (February 12, 1935).

[2] *See* Securities Exchange Act Release No. 7011 (February 5, 1963), 28 FR 1506 (February 16, 1963).

[3] Rule 12d2–2 prescribes the circumstances under which a security may be delisted from an exchange and withdrawn from registration under Section 12(b) of the Act, and provides the procedures for taking such action.

[4] In fact, some exchanges do not file any trading suspension reports in a given year.

SECURITIES AND EXCHANGE COMMISSION

Submission for OMB Review; Comment Request

Upon written request, copies available from: Securities and Exchange Commission, Office of Investor Education and Advocacy, Washington, DC 20549–0213.

Extension: Rule 17a–7; SEC File No. 270–238; OMB Control No. 3235–0214.

Notice is hereby given that, pursuant to the Paperwork Reduction Act of 1995 (44 U.S.C. 3501–3520), the Securities and Exchange Commission (''Commission'') has submitted to the Office of Management and Budget a request for extension of the previously approved collection of information described below.

Rule 17a–7 (17 CFR 270.17a–7) (the ''rule'') under the Investment Company Act of 1940 (15 U.S.C. 80a–1 *et seq.*) (the ''Act'') is entitled ''Exemption of certain purchase or sale transactions between an investment company and certain affiliated persons thereof.'' It provides an exemption from section 17(a) of the Act for purchases and sales of securities between registered investment companies (''funds''), that are affiliated persons (''first-tier affiliates'') or affiliated persons of affiliated persons (''second-tier affiliates''), or between a fund and a first-or second-tier affiliate other than another fund, when the affiliation arises solely because of a common investment adviser, director, or officer. Rule 17a–7 requires funds to keep various records in connection with purchase or sale transactions effected in reliance on the rule. The rule requires the fund's board of directors to establish procedures reasonably designed to ensure that the rule's conditions have been satisfied. The board is also required to determine, at least on a quarterly basis, that all affiliated transactions effected during the preceding quarter in reliance on the rule were made in compliance with these established procedures. If a fund enters into a purchase or sale transaction with an affiliated person, the rule requires the fund to compile and maintain written records of the transaction.[1] The Commission's examination staff uses these records to evaluate for compliance with the rule.

[1] The written records are required to set forth a description of the security purchased or sold, the identity of the person on the other side of the transaction, and the information or materials upon which the board of directors' determination that the transaction was in compliance with the procedures was made.

While most funds do not commonly engage in transactions covered by rule 17a–7, the Commission staff estimates that nearly all funds have adopted procedures for complying with the rule.[2] Of the approximately 3891 currently active funds, the staff estimates that virtually all have already adopted procedures for compliance with rule 17a–7. This is a one-time burden, and the staff therefore does not estimate an ongoing burden related to the policies and procedures requirement of the rule for funds.[3] The staff estimates that there are approximately 150 new funds that register each year, and that each of these funds adopts the relevant polices and procedures. The staff estimates that it takes approximately 4 hours to develop and adopt these policies and procedures, as follows; 3 hours spent by a compliance attorney, and 1 hour collectively spent by the board of directors. Therefore, the total annual burden related to developing and adopting these policies and procedures would be approximately 600 hours.[4]

Of the 3891 existing funds, the staff assumes that approximately 25%, (or 973) enter into transactions affected by rule 17a–7 each year (either by the fund directly or through one of the fund's series), and that the same percentage (25%, or 38 funds) of the estimated 150 funds that newly register each year will also enter into these transactions, for a total of 1011[5] companies that are affected by the recordkeeping requirements of rule 17a–7. These funds must keep records of each of these transactions, and the board of directors must quarterly determine that all relevant transactions were made in compliance with the company's policies and procedures. The rule generally imposes a minimal burden of collecting and storing records already generated for other purposes.[6] The staff estimates that the burden related to making these records and for the board to review all transactions would be 3 hours annually for each respondent, (2 hours spent by compliance attorneys and 1 hour spent by the board of directors)[7] or 3033 total hours each year.[8]

Based on these estimates, the staff estimates the combined total annual burden hours associated with rule 17a–7 is 3633 hours.[9] The staff also estimates that there are approximately 1161 respondents and 8238 total responses.[10]

The estimates of burden hours are made solely for the purposes of the Paperwork Reduction Act, and are not derived from a comprehensive or even a representative survey or study of the costs of Commission rules. The collection of information required by rule 17a–7 is necessary to obtain the benefits of the rule. Responses will not be kept confidential. An agency may not conduct or sponsor, and a person is not required to respond to, a collection of information unless it displays a currently valid control number.

Please direct general comments regarding the above information to the following persons: (i) Desk Officer for the Securities and Exchange Commission, Office of Management and Budget, Room 10102, New Executive Office Building, Washington, DC 20503 or e-mail to: *Shagufta_Ahmed@omb.eop.gov*); and (ii) Charles Boucher Director/CIO, Securities and Exchange Commission, C/O Shirley Martinson, 6432 General Green Way, Alexandria, VA 22312; or send an e-mail to: *PRA_Mailbox@sec.gov*. Comments must be submitted to OMB within 30 days of this notice.

Dated: December 22, 2008.

Florence E. Harmon,

Acting Secretary.

[FR Doc. E8–31093 Filed 12–30–08; 8:45 am]

BILLING CODE 8011–01–P

[2] Unless stated otherwise, these estimates are based on conversations with the examination and inspections staff of the Commission and fund representatives.

[3] Based on our reviews and conversations with fund representatives, we understand that funds rarely, if ever, need to make changes to these policies and procedures once adopted, and therefore we do not estimate a paperwork burden for such updates.

[4] This estimate is based on the following calculations: (4 hours × 150 = 600 hours).

[5] This estimate is based on the following calculation: (973 + 38 = 1011).

[6] Commission staff believes that rule 17a–7 does not impose any costs associated with record preservation in addition to the costs that funds already incur to comply with the record preservation requirements of rule 31a–2 under the Act. Rule 31a–2 requires companies to preserve certain records for specified periods of time.

[7] The staff estimates that funds that rely on rule 17a–7 annually enter into an average of 8 rule 17a–7 transactions each year. The staff estimates that the compliance attorneys of the companies spend approximately 15 minutes per transaction on this recordkeeping, and the board of directors spends a total of 1 hour annually in determining that all transactions made that year were done in compliance with the company's policies and procedures.

[8] This estimate is based on the following calculation: (3 hours × 1011 companies = 3033 hours).

[9] This estimate is based on the following calculations: (600 hours + 3033 hours = 3633 total hours).

[10] This estimate is based on the following calculations: (150 newly registered funds + 1011 funds that engage in rule 17a–7 transactions = 1161); (1011 funds that engage in rule 17a–7 transactions × 8 times per year = 8088); (8088 + 150 = 8238 responses).

SECURITIES AND EXCHANGE COMMISSION

Submission for OMB Review; Comment Request

Upon written request, copies available from: Securities and Exchange Commission, Office of Investor Education and Advocacy, Washington, DC 20549–0213.

Extension: Rule 0–1; SEC File No. 270–472; OMB Control No. 3235–0531.

Notice is hereby given that, pursuant to the Paperwork Reduction Act of 1995 (44 U.S.C. 350l *et seq.*), the Securities and Exchange Commission (''Commission'') has submitted to the Office of Management and Budget request for extension of the previous approved collection of information discussed below.

The Investment Company Act of 1940 (the ''Act'')[1] establishes a comprehensive framework for regulating the organization and operation of investment companies (''funds''). A principal objective of the Act is to protect fund investors by addressing the conflicts of interest that exist between funds and their investment advisers and other affiliated persons. The Act places significant responsibility on the fund board of directors in overseeing the operations of the fund and policing the relevant conflicts of interest.[2]

In one of its first releases, the Commission exercised its rulemaking authority pursuant to sections 38(a) and 40(b) of the Act by adopting rule 0–1 (17 CFR 270.0–1).[3] Rule 0–1, as subsequently amended on numerous occasions, provides definitions for the terms used by the Commission in the rules and regulations it has adopted pursuant to the Act. The rule also contains a number of rules of construction for terms that are defined either in the Act itself or elsewhere in the Commission's rules and regulations. Finally, rule 0–1 defines terms that serve as conditions to the availability of certain of the Commission's exemptive rules. More specifically, the term ''independent legal counsel,'' as defined in rule 0–1, sets out conditions that funds must meet in order to rely on any of ten exemptive rules (''exemptive rules'') under the Act.[4]

[1] 15 U.S.C. 80a.

[2] For example, fund directors must approve investment advisory and distribution contracts. *See* 15 U.S.C. 80a–15(a), (b), and (c).

[3] Investment Company Act Release No. 4 (Oct. 29, 1940) (5 FR 4316 (Oct. 31, 1940)). Note that rule 0–1 was originally adopted as rule N–1.

[4] The relevant exemptive rules are: rule 10f–3 (17 CFR 270.10f–3), rule 12b–1 (17 CFR 270.12b–1),

Continued

The Commission amended rule 0–1 to include the definition of the term ''independent legal counsel'' in 2001.[5] This amendment was designed to enhance the effectiveness of fund boards of directors and to better enable investors to assess the independence of those directors. The Commission also amended the exemptive rules to require that any person who serves as legal counsel to the independent directors of any fund that relies on any of the exemptive rules must be an ''independent legal counsel.'' This requirement was added because independent directors can better perform the responsibilities assigned to them under the Act and the rules if they have the assistance of truly independent legal counsel.

If the board's counsel has represented the fund's investment adviser, principal underwriter, administrator (collectively, ''management organizations'') or their ''control persons'' [6] during the past two years, rule 0–1 requires that the board's independent directors make a determination about the adequacy of the counsel's independence. A majority of the board's independent directors are required to reasonably determine, in the exercise of their judgment, that the counsel's prior or current representation of the management organizations or their control persons was sufficiently limited to conclude that it is unlikely to adversely affect the counsel's professional judgment and legal representation. Rule 0–1 also requires that a record for the basis of this determination is made in the minutes of the directors' meeting. In addition, the independent directors must have obtained an undertaking from the counsel to provide them with the information necessary to make their determination and to update promptly that information when the person begins to represent a management organization or control person, or when he or she materially increases his or her representation. Generally, the independent directors must re-evaluate their determination no less frequently than annually.

Any fund that relies on one of the exemptive rules must comply with the requirements in the definition of ''independent legal counsel'' under rule 0–1. We assume that approximately 4128 funds rely on at least one of the exemptive rules annually.[7] We further assume that the independent directors of approximately one-third (1376) of those funds would need to make the required determination in order for their counsel to meet the definition of independent legal counsel.[8] We estimate that each of these 1376 funds would be required to spend, on average, 0.75 hours annually to comply with the recordkeeping requirement associated with this determination, for a total annual burden of approximately 1032 hours. Based on this estimate, the total annual cost for all funds' compliance with this rule is approximately $145,168. To calculate this total annual cost, the Commission staff assumed that approximately two-thirds of the total annual hour burden (688 hours) would be incurred by compliance staff with an average hourly wage rate of $180 per hour,[9] and one-third of the annual hour burden (344 hours) would be incurred by clerical staff with an average hourly wage rate of $62 per hour.[10]

These burden hour estimates are based upon the Commission staff's experience and discussions with the fund industry. The estimates of average burden hours are made solely for the purposes of the Paperwork Reduction Act. These estimates are not derived from a comprehensive or even a representative survey or study of the costs of Commission rules.

Compliance with the collection of information requirements of the rule is mandatory and is necessary to comply with the requirements of the rule in general. An agency may not conduct or sponsor, and a person is not required to respond to, a collection of information unless it displays a currently valid control number.

Please direct general comments regarding the above information to the following persons: (i) Desk Officer for the Securities and Exchange Commission, Office of Management and Budget, Room 10102, New Executive Office Building, Washington, DC 20503 or send an e-mail to: *Shagufta_Ahmed@omb.eop.gov*); and (ii) Charles BoucherDirector/CIO, Securities and Exchange Commission, C/O Shirley Martinson, 6432 General Green Way, Alexandria, VA 22312; or send an e-mail to: *PRA_Mailbox@sec.gov*. Comments must be submitted to OMB within 30 days of this notice.

Dated: December 22, 2008.

Florence E. Harmon,

Acting Secretary.

[FR Doc. E8–31091 Filed 12–30–08; 8:45 am]

BILLING CODE 8011–01–P

rule 15a–4(b)(2) (17 CFR 270.15a–4(b)(2)), rule 17a–7 (17 CFR 270.17a–7), rule 17a–8 (17 CFR 270.17a–8), rule 17d–1(d)(7) (17 CFR 270.17d–1(d)(7)), rule 17e–1(c) (17 CFR 270.17e–1(c)), rule 17g–1 (17 CFR 270.17g–1), rule 18f–3 (17 CFR 270.18f–3), and rule 23c–3 (17 CFR 270.23c–3).

[5] See Role of Independent Directors of Investment Companies, Investment Company Act Release No. 24816 (Jan. 2, 2001) (66 FR 3735 (Jan. 16, 2001)).

[6] A ''control person'' is any person—other than a fund—directly or indirectly controlling, controlled by, or under common control, with any of the fund's management organizations. See 17 CFR 270.01(a)(6)(iv)(B).

[7] Based on statistics compiled by Commission staff, we estimate that there are approximately 4586 funds that could rely on one or more of the exemptive rules. Of those funds, we assume that approximately 90 percent (4128) actually rely on at least one exemptive rules annually.

[8] We assume that the independent directors of the remaining two-thirds of those funds will choose not to have counsel, or will rely on counsel who has not recently represented the fund's management organizations or control persons. In both circumstances, it would not be necessary for the fund's independent directors to make a determination about their counsel's independence.

[9] The estimated hourly wages used in this PRA analysis were derived from reports prepared by the Securities Industry and Financial Markets Association. See Securities Industry and Financial Markets Association, Report on Management and Professional Earnings in the Securities Industry—2007 (2007), modified to account for an 1800-hour work year and multiplied by 5.35 to account for bonuses, firm size, employee benefits and overhead; and Securities Industry and Financial Markets Association, Office Salaries in the Securities Industry—2007 (2007), modified to account for an 1800-hour work year and multiplied by 2.93 to account for bonuses, firm size, employee benefits and overhead.

[10] (688 × $180/hour) + (344 × $62/hour) = $145,168).

SECURITIES AND EXCHANGE COMMISSION

[Release No. IC–28572; 812–13615]

Citigroup Global Markets Inc., et al.; Notice of Application and Temporary Order

December 23, 2008.

AGENCY: Securities and Exchange Commission (''Commission'').

ACTION: Temporary order and notice of application for a permanent order under section 9(c) of the Investment Company Act of 1940 (''Act'').

SUMMARY OF APPLICATION: Applicants have received a temporary order exempting them from section 9(a) of the Act, with respect to an injunction entered against Citigroup Global Markets Inc. (''CGMI'') on December 23, 2008 by the United States District Court for the Southern District of New York (the ''Injunction''), until the Commission takes final action on an application for a permanent order. Applicants also have applied for a permanent order.

APPLICANTS: CGMI, CEFOF GP I Corp. (''CEFOF''), CELFOF GP Corp. (''CELFOF''), Citibank, N.A. (''Citibank''), Citigroup Alternative Investments LLC (''Citigroup Alternative''), Citigroup Investment

Advisory Services Inc. (''Citigroup Advisory''), Citigroup Capital Partners I GP I Corp. (''CCP I'') and Citigroup Capital Partners I GP II Corp. (''CCP II'') (collectively, ''Applicants'').[1]

FILING DATE: The application was filed on December 23, 2008.

HEARING OR NOTIFICATION OF HEARING: An order granting the application will be issued unless the Commission orders a hearing. Interested persons may request a hearing by writing to the Commission's Secretary and serving Applicants with a copy of the request, personally or by mail. Hearing requests should be received by the Commission by 5:30 p.m. on January 15, 2009, and should be accompanied by proof of service on Applicants, in the form of an affidavit, or for lawyers, a certificate of service. Hearing requests should state the nature of the writer's interest, the reason for the request, and the issues contested. Persons who wish to be notified of a hearing may request notification by writing to the Commission's Secretary.

ADDRESSES: Secretary, U.S. Securities and Exchange Commission, 100 F Street, NE, Washington, DC 20549–1090. Applicants: CGMI and Citigroup Advisory, 787 Seventh Avenue, New York, NY 10019; CEFOF, CELFOF, CCP I and CCP II, 388 Greenwich Street, New York, NY 10013; Citibank, 399 Park Avenue, New York, NY 10043; and Citigroup Alternative, 731 Lexington Avenue, 28th Floor, New York, NY 10022.

FOR FURTHER INFORMATION CONTACT: John Yoder, Senior Counsel, at (202) 551–6878, or Julia Kim Gilmer, Branch Chief, at (202) 551–6821, (Division of Investment Management, Office of Investment Company Regulation).

SUPPLEMENTARY INFORMATION: The following is a temporary order and a summary of the application. The complete application may be obtained for a fee at the Commission's Public Reference Room, 100 F Street NE., Washington, DC 20549–1520 (tel. 202–551–5850).

Applicants' Representations:

1. Each of the Applicants is an indirect wholly owned subsidiary of Citigroup Inc., a financial holding company whose businesses provide a broad range of financial services. CGMI is registered as a broker-dealer under the Securities Exchange Act of 1934 (''Exchange Act'') and serves as principal underwriter for one or more registered investment companies and unit investment trusts (''UITs'', together with registered investment companies, ''Funds''). Citigroup Alternative and Citigroup Advisory are registered as investment advisers under the Investment Advisers Act of 1940 and serve as investment advisers for one or more Funds. CEFOF, CELOF, Citibank, CCP I and CCP II (''ESC Advisers'') serve as investment advisers to certain employees' securities companies within the meaning of section 2(a)(13) of the Act, which provide investment opportunities for certain eligible employees, officers, directors and persons on retainer of Citigroup and its affiliates (''ESCs'' and included in the term ''Funds'').[2]

2. On December 23, 2008, the United States District Court for the Southern District of New York entered a judgment against CGMI (''Judgment'') in a matter brought by the Commission.[3] The Commission alleged in the complaint (''Complaint'') that CGMI violated section 15(c) of the Exchange Act in connection with the marketing and sale of auction rate securities (''ARS''). The Complaint alleged that CGMI misled its customers regarding the fundamental nature and increasing risks associated with ARS that CGMI underwrote, marketed and sold. The Complaint further alleged that CGMI misrepresented to its customers that ARS were safe, highly liquid investments that were equivalent to money market instruments. Without admitting or denying the allegations in the Complaint, except as to jurisdiction, CGMI consented to the entry of the Judgment that included, among other things, the entry of the Injunction and other equitable relief including undertakings to take various remedial actions for the benefit of purchasers of certain ARS.

Applicants' Legal Analysis:

1. Section 9(a)(2) of the Act, in relevant part, prohibits a person who has been enjoined from engaging in or continuing any conduct or practice in connection with the purchase or sale of a security or in connection with activities as an underwriter, broker or dealer, from acting, among other things, as an investment adviser or depositor of any registered investment company or a principal underwriter for any registered open-end investment company, registered UIT or registered face-amount certificate company. Section 9(a)(3) of the Act makes the prohibition in section 9(a)(2) applicable to a company, any affiliated person of which has been disqualified under the provisions of section 9(a)(2). Section 2(a)(3) of the Act defines ''affiliated person'' to include any person directly or indirectly controlling, controlled by, or under common control with, the other person. Applicants state that CGMI is an affiliated person of each of the other Applicants within the meaning of section 2(a)(3) of the Act. Applicants state that the entry of the Injunction results in Applicants being subject to the disqualification provisions of section 9(a) of the Act.

2. Section 9(c) of the Act provides that the Commission shall grant an application for exemption from the disqualification provisions of section 9(a) if it is established that these provisions, as applied to the Applicants, are unduly or disproportionately severe or that the Applicants' conduct has been such as not to make it against the public interest or the protection of investors to grant the exemption. Applicants have filed an application pursuant to section 9(c) seeking a temporary and permanent order exempting them and Covered Persons from the disqualification provisions of section 9(a) of the Act.

3. Applicants believe they meet the standard for exemption specified in section 9(c). Applicants state that the prohibitions of section 9(a) as applied to the Applicants would be unduly and disproportionately severe and that the conduct of Applicants has been such as not to make it against the public interest or the protection of investors to grant the exemption from section 9(a).

4. Applicants state that the alleged conduct giving rise to the Injunction did not involve any of the Applicants acting in the capacity of investment adviser, subadviser or depositor to a Fund, or principal underwriter for any open-end Fund or UIT. Applicants also state that none of the current or former directors, officers, or employees of the Applicants (other than CGMI) had any participation in the violative conduct alleged in the Complaint. Applicants further state that the personnel at CGMI who were involved in the violations alleged in the Complaint have had no and will not have any future involvement in providing advisory, subadvisory or depository services to Funds, or principal underwriting services to open-end Funds or UITs.

5. Applicants state that the inability of the Applicants to continue to serve as investment adviser, depositor or

[1] Applicants request that any relief granted pursuant to the application also apply to any other company of which CGMI is or hereafter may become an affiliated person (together with the Applicants, the ''Covered Persons'').

[2] Greenwich Street Employees Fund, L.P., et al., Investment Company Act Release Nos. 25324 (Dec. 21, 2001) (notice) and 25367 (Jan. 16, 2002) (order).

[3] United States Securities and *Exchange Commission* v. *Citigroup Global Markets Inc.,* 08–CV–10753, Judgment as to Defendant Citigroup Global Markets Inc. (S.D.N.Y.) (entered Dec. 23, 2008).

principal underwriter to the Funds would result in potentially severe financial hardships for the Funds and their shareholders. The Applicants have distributed, or will distribute as soon as reasonably practical, written materials, including an offer to meet in person to discuss the materials, to the board of directors of each Fund, including the directors who are not ''interested persons,'' as defined in section 2(a)(19) of the Act, of such Fund, and their independent legal counsel as defined in rule 0–1(a)(6) under the Act, if any, regarding the Judgment, any impact on the Funds, and the application. The Applicants state they will provide the Funds with all information concerning the Judgment and the application that is necessary for the Funds to fulfill their disclosure and other obligations under the federal securities laws.

6. Applicants also state that, if they were barred from serving as investment adviser, depositor or principal underwriter to the Funds, the effect on their businesses and employees would be severe. Applicants state that they have committed substantial resources to establish an expertise in providing services covered by section 9(a) of the Act to Funds. Applicants further state that prohibiting them from providing advisory and distribution services would not only adversely affect their businesses, but would also adversely affect approximately 50 employees that are involved in those activities. Applicants also state that disqualifying the ESC Advisers from continuing to provide investment advisory services to ESCs is not in the public interest or in furtherance of the protection of investors. Because the ESCs have been formed for certain eligible officers, directors and persons on retainer of Citigroup and its affiliates, it would not be consistent with the purposes of the ESC provisions of the Act or the ESC Order to require another entity not affiliated with the ESC Advisers to manage the ESCs. In addition, participating employees of Citigroup and its affiliates subscribed for interests with the expectation that the ESCs would be managed by an affiliate of Citigroup.

7. Applicants previously have received exemptions under section 9(c) as the result of conduct that triggered section 9(a) as described in greater detail in the application.

Applicants' Condition:

Applicants agree that any order granting the requested relief will be subject to the following condition:

Any temporary exemption granted pursuant to the application shall be without prejudice to, and shall not limit the Commission's rights in any manner with respect to, any Commission investigation of, or administrative proceedings involving or against, Covered Persons, including without limitation, the consideration by the Commission of a permanent exemption from section 9(a) of the Act requested pursuant to the application or the revocation or removal of any temporary exemptions granted under the Act in connection with the application.

Temporary Order:

The Commission has considered the matter and finds that Applicants have made the necessary showing to justify granting a temporary exemption.

Accordingly,

It is hereby ordered, pursuant to section 9(c) of the Act, that the Applicants and any other Covered Persons are granted a temporary exemption from the provisions of section 9(a), solely with respect to the Injunction, subject to the condition in the application, from December 23, 2008, until the Commission takes final action on their application for a permanent order.

By the Commission.

Florence E. Harmon,

Acting Secretary.

[FR Doc. E8–31090 Filed 12–30–08; 8:45 am]

BILLING CODE 8011–01–P

SECURITIES AND EXCHANGE COMMISSION

[Release No. IC—28569; 812–13609]

UBS Securities LLC, et al.; Notice of Application and Temporary Order

December 23, 2008.

AGENCY: Securities and Exchange Commission (''Commission'').

ACTION: Temporary order and notice of application for a permanent order under section 9(c) of the Investment Company Act of 1940 (''Act'').

Summary of Application: Applicants have received a temporary order exempting them from section 9(a) of the Act, with respect to an injunction entered against UBS Securities LLC (''UBS Securities'') and UBS Financial Services Inc. (''UBSFS,'' and together with UBS Securities, the ''Settling Firms'') on December 23, 2008 by the United States District Court for the Southern District of New York (''Injunction'') until the Commission takes final action on an application for a permanent order. Applicants also have applied for a permanent order.

Applicants: UBS Securities; UBSFS; UBS Fund Advisor, L.L.C. (''UBSFA''); UBS Willow Management, L.L.C. (''UBS Willow''), UBS Eucalyptus Management, L.L.C., UBS Tamarack Management, L.L.C., UBS Juniper Management, L.L.C., and UBS Enso Management L.L.C. (collectively, ''UBSFA Advisers''); UBS Global Asset Management (Americas) Inc. (''UBS Global AM Americas''); UBS Global Asset Management (US) Inc. (''UBS Global AM US''); and UBS AG and UBS IB Co-Investment 2001 GP Limited (''ESC GP'') (together, other than UBS Securities, ''Fund Servicing Applicants'' and together with UBS Securities, the ''Applicants'').[1]

Filing Dates: The application was filed on December 16, 2008. Applicants have agreed to file an amendment during the notice period, the substance of which is reflected in this notice.

Hearing or Notification of Hearing: An order granting the application will be issued unless the Commission orders a hearing. Interested persons may request a hearing by writing to the Commission's Secretary and serving applicants with a copy of the request, personally or by mail. Hearing requests should be received by the Commission by 5:30 p.m. on January 15, 2009, and should be accompanied by proof of service on applicants, in the form of an affidavit or, for lawyers, a certificate of service. Hearing requests should state the nature of the writer's interest, the reason for the request, and the issues contested. Persons who wish to be notified of a hearing may request notification by writing to the Commission's Secretary.

ADDRESSES: Secretary, U.S. Securities and Exchange Commission, 100 F Street, NE., Washington, DC 20549–1090; Applicants: UBS Securities, 299 Park Avenue, New York, NY 10171; UBSFS, 1200 Harbor Boulevard, Weehawken, NJ 07086; UBSFA, UBSFA Advisers, and UBS Global AM US, 51 West 52nd Street, New York, NY 10019; UBS Global AM Americas, One North Wacker Drive, Chicago, IL 60606; and UBS AG and ESC–GP, 677 Washington Boulevard, Stamford, CT 06901.

FOR FURTHER INFORMATION CONTACT: John Yoder, Senior Counsel, at 202–551–6878 or Julia Kim Gilmer, Branch Chief, at 202–551–6821 (Division of Investment Management, Office of Investment Company Regulation).

SUPPLEMENTARY INFORMATION: The following is a temporary order and summary of the application. The

[1] Applicants request that any relief granted pursuant to the application also apply to any other company of which either of the Settling Firms is or may become affiliated persons (together with the Applicants, the ''Covered Persons'').

complete application may be obtained for a fee at the Commission's Public Reference Room, 100 F Street, NE., Washington, DC 20549–1520 (tel. 202–551–5850).

Applicants' Representations

1. UBS AG is a bank established under the laws of Switzerland that directly or through its subsidiaries provides global wealth management, securities and retail and commercial banking services. Each of the Applicants are either directly or indirectly controlled by UBS AG. UBS Securities is a full service investment banking firm engaged in securities underwriting, sales and trading, investment banking, financial advisory services and investment research services. UBSFS, UBSFA, UBSFA Advisers and UBS Global AM Americas are registered as investment advisers under the Investment Advisers Act of 1940 and currently serve as investment advisers to registered management investment companies (''Funds''). UBSFS and UBS Global AM U.S. are registered as broker-dealers under the Securities Exchange Act of 1934 (''Exchange Act'') and act as principal underwriter to various open-end Funds and unit investment trusts (''UITs''). UBSFS also serves as a depositor to UITs. UBS AG and ESC GP provide investment advisory services to employees' securities companies (''ESCs''), as defined in section 2(a)(13) of the Act, which provide investment opportunities for highly compensated key employees, officers, directors and current consultants of UBS AG and its affiliates.

2. On December 23, 2008, the United States District Court for the Southern District of New York entered a judgment, which included the Injunction, against the Settling Firms (''Judgment'') in a matter brought by the Commission.[2] The Commission alleged in the complaint (''Complaint'') that the Settling Firms violated section 15(c) of the Exchange Act in connection with the marketing and sale of auction rate securities (''ARS''). The Complaint alleged that the Settling Firms misled their customers regarding the fundamental nature and increasing risks associated with ARS that the Settling Firms underwrote, marketed and sold. The Complaint further alleged that the Settling Firms misrepresented to their customers that ARS were safe, highly liquid investments that were equivalent to cash or money-market funds. Without admitting or denying any of the allegations in the Complaint, except as to jurisdiction, the Settling Firms consented to the entry of the Injunction and other equitable relief, including undertakings to take various remedial actions for the benefit of purchasers of certain ARS.

Applicants' Legal Analysis

1. Section 9(a)(2) of the Act, in relevant part, prohibits a person who has been enjoined from engaging in or continuing any conduct or practice in connection with the purchase or sale of a security, or in connection with activities as an underwriter, broker or dealer, from acting, among other things, as an investment adviser or depositor of any registered investment company or a principal underwriter for any registered open-end investment company, registered unit investment trust, or registered face-amount certificate company. Section 9(a)(3) of the Act makes the prohibition in section 9(a)(2) applicable to a company, any affiliated person of which has been disqualified under the provisions of section 9(a)(2). Section 2(a)(3) of the Act defines ''affiliated person'' to include, among others, any person directly or indirectly controlling, controlled by, or under common control, with the other person. Applicants state that the Settling Firms are affiliated persons of each of the other Applicants within the meaning of section 2(a)(3). Applicants state that, as a result of the Injunction, they would be subject to the prohibitions of section 9(a).

2. Section 9(c) of the Act provides that the Commission shall grant an application for exemption from the disqualification provisions of section 9(a) of the Act if it is established that these provisions, as applied to Applicants, are unduly or disproportionately severe or that the conduct of the Applicants has been such as not to make it against the public interest or the protection of investors to grant the exemption. Applicants have filed an application pursuant to section 9(c) seeking a temporary and permanent order exempting the Applicants and the other Covered Persons from the disqualification provisions of section 9(a).

3. Applicants believe that they meet the standards for exemption specified in section 9(c). Applicants state that the prohibitions of section 9(a) as applied to them would be unduly and disproportionately severe and that the conduct of Applicants has been such as not to make it against the public interest or the protection of investors to grant the requested exemption from section 9(a).

4. Applicants state that the alleged conduct giving rise to the Injunction did not involve any of the Applicants acting in the capacity of investment adviser, sub-adviser or depositor to any registered investment company or in the capacity of principal underwriter for any open-end Fund or UIT (''Fund Service Activities''). Applicants note that none of the current or former directors, officers, or employees of the Applicants (other than the Settling Firms) had any involvement in the conduct alleged in the Complaint, except as noted in footnote 3.[3] Applicants further state that the personnel at the Settling Firms who were involved in the violations alleged in the Complaint have had no and will not have any future involvement in Fund Service Activities.

5. Applicants state that the inability of the Applicants to engage in Fund Service Activities would result in potentially severe financial hardships for the registered investment companies they serve and the registered investment companies' shareholders or unitholders. Applicants state that they will distribute written materials, including an offer to meet in person to discuss the materials, to the boards of directors of the Funds (the ''Boards''), including the directors who are not ''interested persons,'' as defined in section 2(a)(19) of the Act, of such Funds, and their independent legal counsel as defined in rule 0–1(a)(6) under the Act, if any, regarding the Injunction, any impact on the Funds, and the application. Applicants state that they will provide the Boards with all information concerning the Injunction and the application that is necessary for the Funds to fulfill their disclosure and other obligations under the federal securities laws.

6. Applicants also state that, if they were barred from providing Fund Service Activities to registered investment companies and ESCs, the effect on their businesses and employees would be severe. Applicants state that they have committed substantial resources to establish an

[2] *Securities and Exchange Commission* v. *UBS Securities LLC and UBS Financial Services Inc.,* Judgment as to UBS Securities LLC and UBS Financial Services Inc., 1:08–CV–10754 (S.D.N.Y.) (entered Dec. 23, 2008).

[3] The Complaint alleges that several senior executives of the Settling Firms sold all or some of their personal auction rate securities holdings after becoming aware of undisclosed risk factors associated with the auction rate securities program, including concerns about the Settling Firms' ability and willingness to support the auctions. Certain of these officers or employees may also have been officers or employees of UBS AG. These officers or employees have had no involvement in Applicants' Fund Service Activities and are either no longer employed by the Settling Firms or UBS AG or are not and will not have any involvement in Applicants' Fund Service Activities.

expertise in providing Fund Service Activities. Applicants further state that prohibiting them from providing advisory and distribution services would not only adversely affect their businesses, but would also adversely affect over 450 employees that are involved in those activities. Applicants also state that disqualifying UBS AG and ESC GP from continuing to provide investment advisory services to ESCs is not in the public interest or in furtherance of the protection of investors. Because the ESCs have been formed for the benefit of key employees, officers, directors and current consultants of UBS AG and its affiliates, it would not be consistent with the purposes of the ESC provisions of the Act to require another entity not affiliated with UBS AG to manage the ESCs. In addition, participants in the ESCs have subscribed for interests in the ESCs with the expectation that the ESCs would be managed by an affiliate of UBS AG.

7. Applicants state that UBS Securities and certain other Applicants have previously received an order under section 9(c) of the Act.[4] Applicants also state that affiliated persons of UBS Securities previously have received exemptions under section 9(c) as the result of conduct that triggered section 9(a), as described in greater detail in the application.

Applicants' Condition

Applicants agree that any order granting the requested relief will be subject to the following condition:

Any temporary exemption granted pursuant to the application shall be without prejudice to, and shall not limit the Commission's rights in any manner with respect to, any Commission investigation of, or administrative proceedings involving or against, Covered Persons, including without limitation, the consideration by the Commission of a permanent exemption from section 9(a) of the Act requested pursuant to the application or the revocation or removal of any temporary exemptions granted under the Act in connection with the application.

Temporary Order

The Commission has considered the matter and finds that the Applicants have made the necessary showing to justify granting a temporary exemption.

Accordingly,

It is hereby ordered, pursuant to section 9(c) of the Act, that Applicants and any other Covered Persons are granted a temporary exemption from the provisions of section 9(a), solely with respect to the Injunction, subject to the condition in the application, from December 23, 2008, until the Commission takes final action on their application for a permanent order.

By the Commission.

Florence E. Harmon,

Acting Secretary.

[FR Doc. E8–31087 Filed 12–30–08; 8:45 am]

BILLING CODE 8011–01–P

[4] UBS Securities L.L.C., *et al.*, Investment Company Act Rel. Nos. 26245 (Oct. 31, 2003) (notice) and 27047 (Apr. 25, 2005) (order).

SECURITIES AND EXCHANGE COMMISSION

[Investment Company Act Release No. 28568; 812–13488]

AdvisorShares Investments, LLC and AdvisorShares Trust; Notice of Application

December 23, 2008.

AGENCY: Securities and Exchange Commission (''Commission'').

ACTION: Notice of an application for an order under section 6(c) of the Investment Company Act of 1940 (''Act'') for an exemption from sections 2(a)(32), 5(a)(1) and 22(d) of the Act and rule 22c–1 under the Act, and under sections 6(c) and 17(b) of the Act for an exemption from sections 17(a)(1) and (a)(2) of the Act.

Applicants: AdvisorShares Investments, LLC (the ''Advisor'') and AdvisorShares Trust (the ''Trust'').

Summary of Application: Applicants request an order that permits: (a) Series of certain open-end management investment companies to issue shares (''Shares'') redeemable in large aggregations only (''Creation Units''); (b) secondary market transactions in Shares to occur at negotiated market prices; and (c) certain affiliated persons of the series to deposit securities into, and receive securities from, the series in connection with the purchase and redemption of Creation Units.

Filing Dates: The application was filed on January 31, 2008, and amended on October 17, 2008. Applicants have agreed to file an amendment during the notice period, the substance of which is reflected in this notice.

Hearing or Notification of Hearing: An order granting the requested relief will be issued unless the Commission orders a hearing. Interested persons may request a hearing by writing to the Commission's Secretary and serving applicants with a copy of the request, personally or by mail. Hearing requests should be received by the Commission by 5:30 p.m. on January 15, 2009, and should be accompanied by proof of service on applicants, in the form of an affidavit or, for lawyers, a certificate of service. Hearing requests should state the nature of the writer's interest, the reason for the request, and the issues contested. Persons who wish to be notified of a hearing may request notification by writing to the Commission's Secretary.

ADDRESSES: Secretary, U.S. Securities and Exchange Commission, 100 F Street, NE., Washington, DC 20549–1090. *Applicants:* Noah Hamman, c/o Morgan, Lewis & Bockius LLP, 1111 Pennsylvania Avenue, NW., Washington, DC 20004.

FOR FURTHER INFORMATION CONTACT: Courtney S. Thornton, Senior Counsel, or Michael W. Mundt, Assistant Director, at (202) 551–6821 (Division of Investment Management, Office of Investment Company Regulation).

SUPPLEMENTARY INFORMATION: The following is a summary of the application. The complete application may be obtained for a fee at the Commission's Public Reference Desk, 100 F Street, NE., Washington, DC 20549–1520 (tel. 202–551–5850).

Applicants' Representations

1. The Trust, a statutory trust established under the laws of Delaware, is registered with the Commission as an open-end management investment company. The Trust is organized as a series investment company with one initial series (the ''Initial Fund''). The investment objective of the Initial Fund will be to provide long term growth of capital. The Initial Fund and all future series of the Trust (''Future Funds,'' collectively with the Initial Fund, ''Funds'') will attempt to achieve their investment objectives by utilizing active management strategies based on various formulas for asset allocation, security selection, and portfolio construction. Each Fund will primarily hold shares of underlying exchange traded funds (''ETFs''), as well as shares of certain exchange traded products that are not registered as investment companies under the Act.[1] Applicants will only

[1] The Funds may invest in exchange traded products that invest primarily in commodities or currency, but otherwise operate in a manner similar to exchange traded products registered under the Act. In addition, the Funds may also invest in equity securities or fixed income securities traded in a U.S. or non-U.S. markets, as well as futures contracts, options on such futures contracts, swaps, forward contracts or other derivatives, and shares of money market mutual funds or other investment companies, all in accordance with their investment objectives. The Funds may also invest in equity securities or fixed income securities traded in international markets or in a combination of equity,

invest in unaffiliated ETFs that have received certain exemptive relief from the Commission to permit such investments in excess of the limits of section 12(d)(1)(A) and (B) of the Act. Any Future Fund (a) will be advised by the Advisor or an entity controlled by or under common control with the Advisor, and (b) will comply with the terms and conditions of the order.

2. The Advisor, a Delaware limited liability company, or a subsidiary of such company, will serve as the investment adviser to each Fund. The Advisor will be registered as an investment adviser of the Investment Advisers Act of 1940 (''Advisers Act'') prior to a Fund beginning operations. Applicants anticipate that Funds also may engage subadvisors (''Subadvisors'').

3. Applicants anticipate that shares (''Shares'') of the Funds will be sold at a price of between $25 and $200 per Share in Creation Units of 25,000 or more Shares. All orders to purchase Creation Units must be placed with the principal underwriter and distributor of the Creation Units (''Distributor'') by or through a party that has entered into a participant agreement with the Distributor (''Authorized Participant''). Authorized Participants will include broker-dealers, banks, trust companies, and clearing companies that are participants in the Depository Trust Company (''DTC,'' and such participants, ''DTC Participants''). Purchases of Creation Units of the Funds will be made generally by means of an in-kind tender of shares of specific ETFs (the ''Deposit Securities''), with any cash portion of the purchase price (the ''Cash Amount'') to be kept to a minimum. The Cash Amount is an amount equal to the difference between the NAV of a Creation Unit and the market value of the Deposit Securities. The Trust reserves the right to permit, under certain circumstances, a purchaser of Creation Units to substitute cash in lieu of depositing some or all of the requisite Deposit Securities. The Trust may in the future determine that Shares of one or more Funds may be purchased in Creation Units on a cash-only basis if the Trust and the Advisor believe such method would substantially minimize the Trust's transactional costs or enhance its operational efficiencies.

4. Each Fund will charge a fee (''Transaction Fee'') in connection with the sale or redemption of Creation Units to protect existing shareholders from the dilutive costs associated with the purchase and redemption of Creation Units. Each purchaser of a Creation Unit will receive a prospectus (''Prospectus'') that contains complete disclosure about the Transaction Fee. All orders to purchase Creation Units must be placed with the Distributor no later than the closing time of the regular trading session on the NYSE (ordinarily 4 p.m. ET) in order for the purchaser to receive the NAV determined on that date. The Distributor will transmit all purchase orders to the relevant Fund and will also maintain a record of Creation Unit purchases, send out confirmations of such purchases, and furnish a Prospectus to purchasers of Creation Units.

5. The Trust intends to list the Shares of each Fund on a national securities exchange (''Listing Market'') such as the NYSE. It is expected that one or more member firms will be designated to act as a specialist and maintain a market for the Shares trading on the Listing Market (''Exchange Specialist''). The price of Shares trading on the Listing Market will be based on a current bid/offer market. No secondary sales will be made to brokers or dealers at a concession by the Distributor or by a Fund. Purchases and sales of Shares in the secondary market, which will not involve a Fund, will be subject to customary brokerage commissions and charges.

6. Purchasers of Shares in Creation Units may hold such Shares or may sell them into the secondary market. Applicants expect that purchasers of Creation Units will include institutional investors and arbitrageurs, who will purchase or redeem Creation Units of a Fund in pursuit of arbitrage profit and thereby enhance the liquidity of the secondary market and keep the market price of shares close to their NAV. Applicants expect that secondary market purchasers of Shares will include both institutional investors and retail investors for whom Shares will provide a useful, retail-priced, exchange-traded mechanism for investing in a professionally managed, diversified selection of ETFs.[2]

7. Shares will not be individually redeemable, and owners of Shares may acquire those Shares from a Fund, or tender such Shares for redemption to the Fund, in Creation Units only. To redeem, an investor will have to accumulate enough Shares to constitute a Creation Unit. Redemption orders must be placed by or through an Authorized Participant. A redeeming investor will receive a basket of securities designated to be delivered for Creation Unit redemptions on the date that the request for redemption is submitted (''Redemption Securities''), which in most cases will be the same as the Deposit Securities required to purchase Creation Units on that date, and will either receive from or pay to the Fund a balancing amount in cash. A Fund may make redemptions partly in cash in lieu of transferring one or more Redemption Securities to a redeeming investor if the Fund determines that such alternative is warranted, such as if the redeeming investor is unable, by law or policy, to own a particular Redemption Security. A redeeming investor also must pay a Transaction Fee to cover custodial costs.

8. The Trust will not be advertised or marketed or otherwise ''held out'' as a traditional open-end investment company or a mutual fund. The designation of the Trust and the Funds in all marketing materials will be limited to the terms ''exchange-traded fund,'' ''investment company,'' ''fund'' and ''trust'' without reference to an ''open-end fund'' or a ''mutual fund,'' except to compare and contrast the Trust and the Funds with traditional mutual funds. Each Fund's Prospectus will also prominently disclose that the Fund is an actively managed exchange traded fund. All marketing materials that describe the method of obtaining, buying or selling Creation Units, or Shares traded on the Listing Market, or refer to redeemability, will prominently disclose that Shares are not individually redeemable and that the owners of Shares may acquire or redeem Shares from a Fund in Creation Units only. The same approach will be followed in the statement of additional information (''SAI''), shareholder reports and investor educational materials issued or circulated in connection with the Shares. The Trust will provide copies of its annual and semi-annual shareholder reports to DTC Participants for distribution to beneficial owners of Shares.

9. The Trust (or the Listing Market) intends to maintain a Web site that will be publicly available at no charge, which will include the Prospectus and other information about the Funds that is updated on a daily basis. On each Business Day, before the commencement of trading in Shares on the Listing Market, each Fund will disclose the identities and quantities of the securities (''Portfolio Securities'') and other assets held in the Fund portfolio that will form the basis for the

fixed income and U.S. money market securities and/or non-U.S. money market securities.

[2] Shares will be registered in book-entry form only. DTC or its nominee will be the registered owner of all outstanding Shares. DTC or DTC Participants will maintain records reflecting beneficial owners of Shares.

Fund's calculation of NAV at the end of the Business Day.[3]

Applicants' Legal Analysis

1. Applicants request an order under section 6(c) of the Act granting an exemption from sections 2(a)(32), 5(a)(1) and 22(d) of the Act and rule 22c–1 under the Act, and under sections 6(c) and 17(b) of the Act granting an exemption from sections 17(a)(1) and (a)(2) of the Act.

2. Section 6(c) of the Act provides that the Commission may exempt any person, security or transaction, or any class of persons, securities or transactions, from any provision of the Act, if and to the extent that such exemption is necessary or appropriate in the public interest and consistent with the protection of investors and the purposes fairly intended by the policy and provisions of the Act. Section 17(b) of the Act authorizes the Commission to exempt a proposed transaction from section 17(a) of the Act if evidence establishes that the terms of the transaction, including the consideration to be paid or received, are reasonable and fair and do not involve overreaching on the part of any person concerned, and the proposed transaction is consistent with the policies of the registered investment company and the general provisions of the Act.

Sections 5(a)(1) and 2(a)(32) of the Act

3. Section 5(a)(1) of the Act defines an ''open-end company'' as a management investment company that is offering for sale or has outstanding any redeemable security of which it is the issuer. Section 2(a)(32) of the Act defines a redeemable security as any security, other than short-term paper, under the terms of which the holder, upon its presentation to the issuer, is entitled to receive approximately his proportionate share of the issuer's current net assets, or the cash equivalent. Because Shares will not be individually redeemable, applicants request an order that would permit each Fund, as a series of an open-end management investment company, to issue Shares that are redeemable in Creation Units only. Applicants state that Creation Units will always be redeemable. Applicants further state that because Creation Units may always be purchased and redeemed at NAV (less certain transactional expenses), the price of Creation Units on the secondary market and the price of the individual Shares of a Creation Unit, taken together, should not vary substantially from the NAV of Creation Units.

Section 22(d) of the Act and Rule 22c–1 under the Act

4. Section 22(d) of the Act, among other things, prohibits a dealer from selling a redeemable security, which is currently being offered to the public by or through a principal underwriter, except at a current public offering price described in the prospectus. Rule 22c–1 under the Act generally requires that a dealer selling, redeeming, or repurchasing a redeemable security do so only at a price based on its NAV. Applicants state that trading in Shares will take place on and away from the Listing Market at all times on the basis of current bid/offer prices, not at a current offering price described in the prospectus, and not at a price based on NAV. Thus, purchases and sales of Shares in the secondary market will not comply with section 22(d) of the Act and rule 22c–1 under the Act. Applicants request an exemption under section 6(c) from these provisions.

5. Applicants assert that the concerns sought to be addressed by section 22(d) of the Act and rule 22c–1 under the Act with respect to pricing are equally satisfied by the proposed method of pricing Shares. Applicants maintain that while there is little legislative history regarding section 22(d), its provisions, as well as those of rule 22c–1, appear to have been designed to (a) prevent dilution caused by certain riskless-trading schemes by principal underwriters and contract dealers, (b) prevent unjust discrimination or preferential treatment among buyers, and (c) assure an orderly distribution of investment company shares by contract dealers by eliminating price competition from non-contract dealers who could offer investors shares at less than the published sales price and who could pay investors a little more than the published redemption price.

6. Applicants believe that none of these purposes will be relevant issues for secondary trading by dealers in Shares of a Fund. Applicants state that (a) secondary market trading in Shares will not cause dilution for owners of such Shares because such transactions do not directly involve Fund assets, and (b) to the extent different prices exist during a given trading day, or from day to day, such variances occur as a result of third-party market forces, such as supply and demand, but do not occur as a result of unjust or discriminatory manipulation. Finally, applicants contend that the proposed distribution system will be orderly because arbitrage activity will ensure that the difference between the market price of Shares and their NAV remains narrow.

Sections 17(a)(1) and 17(a)(2) of the Act

7. Section 17(a)(1) and (2) of the Act generally prohibit an affiliated person of a registered investment company, or an affiliated person of such a person (''second tier affiliate''), from selling any security to or purchasing any security from the company. Section 2(a)(3) of the Act defines ''affiliated person'' to include any person directly or indirectly owning, controlling, or holding with power to vote 5 percent or more of the outstanding voting securities of the other person and any person directly or indirectly controlling, controlled by, or under common control with, the other person. Section 2(a)(9) of the Act provides that a control relationship will be presumed where one person owns more than 25 percent of another person's voting securities. The Funds may be deemed to be controlled by the Advisor or an entity controlling, controlled by or under common control with the Adviser and hence affiliated persons of each other. In addition, the Funds may be deemed to be under common control with any other registered investment company (or series thereof) advised by the Advisor or an entity controlling, controlled by or under common control with the Advisor (an ''Affiliated Fund''). Applicants state that an investor could own 5 percent or more of a Fund or the Trust, or in excess of 25 percent of the outstanding Shares of a Fund or the Trust, making that investor an affiliated person of the Fund or the Trust under section 2(a)(3)(A) or 2(a)(3)(C) of the Act. For so long as such an investor was deemed to be an affiliated person, section 17(a)(1) could be read to prohibit that investor from depositing the Deposit Securities with a Fund in return for a Creation Unit. Similarly, section 17(a)(2) could be read to prohibit such an investor from entering into an in-kind redemption with a Fund.

8. Applicants request an exemption from section 17(a) under sections 6(c) and 17(b), to permit in-kind purchases and redemptions by persons that are affiliated persons or second tier affiliates of the Funds solely by virtue of one or more of the following: (1) Holding 5 percent or more, or more than 25 percent, of the outstanding Shares of the Trust or one or more Funds; (2) an affiliation with a person with an ownership interest described in (1); or

[3] Applicants note that under accounting procedures followed by the Fund, trades made on the prior Business Day (''T'') will be booked and reflected in NAV on the current Business Day (''T + 1''). Accordingly, the Fund will be able to disclose at the beginning of the Business Day the portfolio that will form the basis for the NAV calculation at the end of the Business Day.

(3) holding 5 percent or more, or more than 25 percent, of the shares of one or more Affiliated Funds.

9. Applicants contend that no useful purpose would be served by prohibiting the affiliated persons or second tier affiliates of a Fund as described above from purchasing or redeeming Creation Units through ''in-kind'' transactions. The purchase and redemption of Creation Units of each Fund is on the same terms for all investors, whether or not such investor is an affiliate. In each case, Creation Units are sold and redeemed by the Trust at their NAV. The Deposit Securities and Redemption Securities will be valued in the same manner as the securities in the Fund portfolio. Accordingly, applicants believe the proposed transactions described above meet the section 17(b) standards for relief because the terms of such proposed transactions are reasonable and fair and do not involve overreaching on the part of any person concerned, and the proposed transactions will be consistent with the policies of each Fund and with the general purposes of the Act.

Applicants' Conditions

The applicants agree that any order of the Commission granting the requested relief will be subject to the following conditions:

1. Neither the Trust nor any Fund will be advertised or marketed as an open-end investment company or mutual fund. Each Fund's Prospectus will prominently disclose that the Fund is an actively managed exchange-traded fund. Each Prospectus will prominently disclose that the Shares are not individually redeemable shares and will disclose that the owners of the Shares may acquire those Shares from the Fund and tender those Shares for redemption to the Fund in Creation Units only. Any advertising material that describes the purchase or sale of Creation Units or refers to redeemability will prominently disclose that the Shares are not individually redeemable and that owners of the Shares may acquire those Shares from the Fund and tender those Shares for redemption to the Fund in Creation Units only.

2. Each Fund's Prospectus will clearly disclose that, for purposes of the Act, Shares are issued by a registered investment company and that the acquisition of Shares by investment companies and companies relying on sections 3(c)(1) or 3(c)(7) of the Act is subject to the restrictions of section 12(d)(1) of the Act.

3. The Web site for the Funds, which will be publicly accessible at no charge, will contain the following information, on a per Share basis, for each Fund: (a) The prior Business Day's NAV and the reported closing price, and a calculation of the premium or discount of the closing price against such NAV; and (b) data in chart format displaying the frequency distribution of discounts and premiums of the daily closing price against the NAV, within appropriate ranges, for each of the four previous calendar quarters (or for the life of the Fund, if shorter).

4. The Prospectus and annual report for each Fund will also include: (a) The information listed in condition 3(b), (i) in the case of the Prospectus, for the most recently completed year (and the most recently completed quarter or quarters, as applicable) and (ii) in the case of the annual report, for the immediately preceding five years (or for the life of the Fund, if shorter), and (b) the cumulative total return and the average annual total return based on NAV and closing price, calculated on a per Share basis for one-, five- and ten-year periods (or life of the Fund, if shorter).

5. As long as the Funds operate in reliance on the requested order, the Shares of the Funds will be listed on a Listing Market.

6. On each Business Day, before commencement of trading in Shares on a Fund's Listing Market, the Fund will disclose on its Web site the identities and weightings of the component securities and other assets held by the Fund that will form the basis for the Fund's calculation of NAV at the end of the Business Day.

7. The Advisor or any Subadvisor, directly or indirectly, will not cause any Authorized Participant (or any investor on whose behalf an Authorized Participant may transact with the Fund) to acquire any Deposit Security for the Fund through a transaction in which the Fund could not engage directly.

8. The requested order will expire on the effective date of any Commission rule under the Act that provides relief permitting the operation of actively managed exchange-traded funds.

For the Commission, by the Division of Investment Management, under delegated authority.

Florence E. Harmon,

Acting Secretary.

[FR Doc. E8–31086 Filed 12–30–08; 8:45 am]

BILLING CODE 8011–01–P

SECURITIES AND EXCHANGE COMMISSION

[Investment Company Act Release No. 28571; 812–13440]

Grail Advisors, LLC and Grail Advisors' Alpha ETF Trust; Notice of Application

December 23, 2008.

AGENCY: Securities and Exchange Commission (''Commission'').

ACTION: Notice of an application for an order under section 6(c) of the Investment Company Act of 1940 (''Act'') for an exemption from sections 2(a)(32), 5(a)(1), 22(d) and 22(e) of the Act and rule 22c–1 under the Act, and under sections 6(c) and 17(b) of the Act for an exemption from sections 17(a)(1) and (a)(2) of the Act, and under section 12(d)(1)(J) for an exemption from sections 12(d)(1)(A) and (B) of the Act.

APPLICANTS: Grail Advisors, LLC (''Adviser'') and Grail Advisors' Alpha ETF Trust (''Trust'').

SUMMARY OF APPLICATION: Applicants request an order that permits: (a) Series of certain open-end management investment companies to issue shares (''Shares'') redeemable in large aggregations only (''Creation Units''); (b) secondary market transactions in Shares to occur at negotiated market prices; (c) certain series to pay redemption proceeds, under certain circumstances, more than seven days from the tender of Shares for redemption; (d) certain affiliated persons of the series to deposit securities into, and receive securities from, the series in connection with the purchase and redemption of Creation Units; and (e) certain registered management investment companies and unit investment trusts outside of the same group of investment companies as the series to acquire Shares.

FILING DATES: The application was filed on October 17, 2007 and amended on August 1, 2008. Applicants have agreed to file an amendment during the notice period, the substance of which is reflected in this notice.

HEARING OR NOTIFICATION OF HEARING: An order granting the requested relief will be issued unless the Commission orders a hearing. Interested persons may request a hearing by writing to the Commission's Secretary and serving applicants with a copy of the request, personally or by mail. Hearing requests should be received by the Commission by 5:30 p.m. on January 15, 2009, and should be accompanied by proof of service on applicants, in the form of an affidavit or, for lawyers, a certificate of service. Hearing requests should state

the nature of the writer's interest, the reason for the request, and the issues contested. Persons who wish to be notified of a hearing may request notification by writing to the Commission's Secretary.

ADDRESSES: Secretary, U.S. Securities and Exchange Commission, 100 F Street, NE., Washington, DC 20549–1090. Applicants: William M. Thomas, Grail Advisors, LLC, One Ferry Building, Suite 255, San Francisco, CA 94111.

FOR FURTHER INFORMATION CONTACT: Jaea F. Hahn, Senior Counsel, at (202) 551–6870 or Marilyn Mann, Branch Chief, at (202) 551–6821 (Division of Investment Management, Office of Investment Company Regulation).

SUPPLEMENTARY INFORMATION: The following is a summary of the application. The complete application may be obtained for a fee at the Commission's Public Reference Desk, 100 F Street, NE., Washington, DC 20549–0102 (tel. 202–551–5850).

Applicants' Representations

1. The Trust is organized as a Delaware statutory trust and will be registered as an open-end management investment company under the Act. The Trust will offer one initial series, Grail U.S. Value Fund (''Initial Fund''). The Initial Fund's investment objective will be to provide long-term capital growth by investing primarily in U.S. equity securities.

2. Applicants request that the order apply to the Initial Fund and any additional series of the Trust and other open-end investment management companies or series thereof, that may be created in the future (''Future Funds'').[1] Any Future Fund will be (a) advised by the Adviser or an entity controlling, controlled by, or under common control with the Adviser, and (b) comply with the terms and conditions of the application. Future Funds may invest in U.S. equity or fixed income securities, foreign equity or fixed income securities (''Foreign Funds''), or a combination of U.S. and foreign equity or fixed income securities. The Initial Fund and Future Funds, including the Foreign Funds, together are the ''Funds.'' Each Fund will operate as an actively managed exchange-traded fund (''ETF'').

3. The Adviser, a Delaware limited liability company, is registered as an investment adviser under the Investment Advisers Act of 1940 (''Advisers Act'') and will serve as investment adviser to each Fund. The Adviser expects to enter into a sub-advisory agreement with one or more investment advisers each of which will serve as an adviser to a Fund (each, a ''Sub-Adviser''). Each Sub-Adviser will be registered under the Advisers Act. Each Fund will have a distributor (''Distributor'') that will be registered as a broker-dealer under the Securities Exchange Act of 1934 (''Exchange Act'') and will serve as the principal underwriter for the Fund.

4. Shares of the Funds will be sold at a price of between $20 and $100 per Share in Creation Units of 50,000 Shares. All orders to purchase Creation Units must be placed with the Distributor by or through a party that has entered into an agreement with the Trust and the Distributor (''Authorized Participant''). An Authorized Participant must be either: (a) A broker-dealer or other participant in the continuous net settlement system of the National Securities Clearing Corporation (''NSCC''), a clearing agency registered with the Commission, or (b) a participant in the Depository Trust Company (''DTC,'' and such participant, ''DTC Participant''). Shares of each Fund generally will be sold in Creation Units in exchange for an in-kind deposit by the purchaser of a portfolio of securities designated by the Adviser (the ''Deposit Securities''), together with the deposit of a relatively small specified cash payment (''Balancing Amount''). The Balancing Amount is an amount equal to the difference between (a) the net asset value (''NAV'') per Creation Unit of the Fund and (b) the total aggregate market value per Creation Unit of the Deposit Securities.[2] Applicants state that in some circumstances it may not be practicable or convenient for a Fund to operate exclusively on an ''in-kind'' basis. The Trust reserves the right to permit, under certain circumstances, a purchaser of Creation Units to substitute cash in lieu of depositing some or all of the requisite Deposit Securities.

5. An investor purchasing a Creation Unit from a Fund will be charged a fee (''Transaction Fee'') to prevent the dilution of the interests of the remaining shareholders resulting from costs in connection with the purchase of Creation Units.[3] The maximum Transaction Fees relevant to each Fund will be fully disclosed in the prospectus (''Prospectus'') or statement of additional information (''SAI'') of such Fund. All orders to purchase Creation Units will be placed with the Distributor by or through an Authorized Participant and it will be the Distributor's responsibility to transmit such orders to the Trust. The Distributor also will be responsible for delivering the Prospectus to those persons purchasing Creation Units, and for maintaining records of both the orders placed with it and the confirmations of acceptance furnished by it. In addition, the Distributor will maintain a record of the instructions given to the Trust to implement the delivery of Shares.

6. Purchasers of Shares in Creation Units may hold such Shares or may sell such Shares into the secondary market. Shares will be listed and traded on a national securities exchange as defined in section 2(a)(26) of the Act (''Exchange''). It is expected that one or more member firms of a listing Exchange will be designated to act as a specialist and maintain a market for Shares on the Exchange (the ''Specialist''), or if Nasdaq or a similar electronic Exchange is the listing Exchange, one or more member firms will act as a market maker (''Market Maker'') and maintain a market for Shares.[4] Prices of Shares trading on an Exchange will be based on the current bid/offer market. Shares sold in the secondary market will be subject to customary brokerage commissions and charges.

7. Applicants expect that purchasers of Creation Units will include institutional investors and arbitrageurs (which could include institutional

[1] All entities that currently intend to rely on the order are named as applicants. Any other entity that relies on the order in the future will comply with the terms and conditions of the application. A Fund of Funds (as defined below) may rely on the order only to invest in Funds and not in any other registered investment company.

[2] In addition to the list of names and amount of each security constituting the current Deposit Securities, it is intended that, on each day that a Fund is open, including as required by section 22(e) of the Act (''Business Day''), the Balancing Amount effective as of the previous Business Day, per outstanding Share of each Fund, will be made available. The Exchange intends to disseminate, every 15 seconds, during regular trading hours, through the facilities of the Consolidated Tape Association, an approximate amount per Share representing the sum of the estimated Balancing Amount effective through and including the previous Business Day, plus the current value of the Deposit Securities, on a per Share basis.

[3] Where a Fund permits a purchaser to substitute cash in lieu of depositing a portion of the requisite Deposit Securities, the purchaser may be assessed a higher Transaction Fee to cover the cost of purchasing such Deposit Securities, including brokerage costs, and part or all of the spread between the expected bid and the offer side of the market relating to such Deposit Securities.

[4] If Shares are listed on the Nasdaq, no particular Market Maker will be contractually obligated to make a market in Shares, although Nasdaq's listing requirements stipulate that at least two Market Makers must be registered as Market Makers in Shares to maintain the listing. Registered Market Makers are required to make a continuous, two-sided market at all times or be subject to regulatory sanctions.

investors). The Specialist, or Market Maker, in providing a fair and orderly secondary market for the Shares, also may purchase Creation Units for use in its market-making activities. Applicants expect that secondary market purchasers of Shares will include both institutional investors and retail investors.[5] Applicants expect that the price at which the Shares trade will be disciplined by arbitrage opportunities created by the ability to continually purchase or redeem Creation Units at their NAV, which should ensure that the Shares will not trade at a material discount or premium in relation to their NAV.

8. Shares will not be individually redeemable, and owners of Shares may acquire those Shares from a Fund, or tender such Shares for redemption to the Fund, in Creation Units only. To redeem, an investor will have to accumulate enough Shares to constitute a Creation Unit. Redemption orders must be placed by or through an Authorized Participant. An investor redeeming a Creation Unit generally will receive (a) a portfolio of securities designated to be delivered for Creation Unit redemptions on the date that the request for redemption is submitted (''Redemption Securities'') and (b) a ''Cash Redemption Payment,'' consisting of an amount calculated in the same manner as the Balancing Amount, although the actual amount of the Cash Redemption Payment may differ from the Balancing Amount if the Redemption Securities are not identical to the Deposit Securities on that day. An investor may receive the cash equivalent of a Redemption Security in certain circumstances, such as if the investor is constrained from effecting transactions in the security by regulation or policy.[6] A redeeming investor may pay a Transaction Fee, calculated in the same manner as a Transaction Fee payable in connection with purchases of Creation Units.

9. Applicants state that in accepting Deposit Securities and satisfying redemptions with Redemption Securities, the relevant Funds will comply with the federal securities laws, including that the Deposit Securities and Redemption Securities are sold in transactions that would be exempt from registration under the Securities Act.[7] As a general matter, the Deposit Securities and Redemption Securities will correspond pro rata to the securities held by each Fund, although Redemption Securities received on redemption may not always be identical to Deposit Securities deposited in connection with the purchase of Creation Units for the same day.

10. Neither the Trust nor any individual Fund will be marketed or otherwise held out as an ''open-end investment company'' or a ''mutual fund.'' Instead, each Fund will be marketed as an ''actively-managed exchange-traded fund.'' All marketing materials that describe the method of obtaining, buying or selling Shares, or refer to redeemability, will prominently disclose that Shares are not individually redeemable and that the owners of Shares may purchase or redeem Shares from a Fund in Creation Units only. The same approach will be followed in the SAI, shareholder reports and investor educational materials issued or circulated in connection with the Shares. The Funds will provide copies of their annual and semi-annual shareholder reports to DTC Participants for distribution to beneficial owners of Shares.

11. The Funds' Web site, which will be publicly available prior to the public offering of Shares, will include the Prospectus and other information about the Funds that is updated on a daily basis, including the mid-point of the bid-ask spread at the time of the calculation of NAV (''Bid/Ask Price''). On each Business Day, before the commencement of trading in Shares on the Exchange, each Fund will disclose the identities and quantities of the securities (''Portfolio Securities'') and other assets held in the Fund portfolio that will form the basis for the Fund's calculation of NAV at the end of the Business Day.[8]

Applicants' Legal Analysis

1. Applicants request an order under section 6(c) of the Act granting an exemption from sections 2(a)(32), 5(a)(1), 22(d) and 22(e) of the Act and rule 22c–1 under the Act; and under sections 6(c) and 17(b) of the Act granting an exemption from sections 17(a)(1) and (a)(2) of the Act; and under section 12(d)(1)(J) for an exemption from sections 12(d)(1)(A) and (B) of the Act.

2. Section 6(c) of the Act provides that the Commission may exempt any person, security or transaction, or any class of persons, securities or transactions, from any provision of the Act, if and to the extent that such exemption is necessary or appropriate in the public interest and consistent with the protection of investors and the purposes fairly intended by the policy and provisions of the Act. Section 17(b) of the Act authorizes the Commission to exempt a proposed transaction from section 17(a) of the Act if evidence establishes that the terms of the transaction, including the consideration to be paid or received, are reasonable and fair and do not involve overreaching on the part of any person concerned, and the proposed transaction is consistent with the policies of the registered investment company and the general provisions of the Act. Section 12(d)(1)(J) of the Act provides that the Commission may exempt any person, security, or transaction, or any class or classes of persons, securities or transactions, from any provision of section 12(d)(1) if the exemption is consistent with the public interest and the protection of investors.

Sections 5(a)(1) and 2(a)(32) of the Act

3. Section 5(a)(1) of the Act defines an ''open-end company'' as a management investment company that is offering for sale or has outstanding any redeemable security of which it is the issuer. Section 2(a)(32) of the Act defines a redeemable security as any security, other than short-term paper, under the terms of which the holder, upon its presentation to the issuer, is entitled to receive approximately a proportionate share of the issuer's current net assets, or the cash equivalent. Because Shares will not be individually redeemable, applicants request an order that would permit each Fund, as a series of an open-end management investment

[5] Shares will be registered in book-entry form only. DTC or its nominee will be the registered owner of all outstanding Shares. DTC or DTC Participants will maintain records reflecting beneficial owners of Shares.

[6] Applicants state that a cash-in-lieu amount will replace any ''to-be-announced'' (''TBA'') transaction that is listed as a Deposit Security or Redemption Security of any Fund. A TBA transaction is a method of trading mortgage-backed securities where the buyer and seller agree upon general trade parameters such as agency, settlement date, par amount and price. The actual pools delivered generally are determined two days prior to the settlement date. The amount of substituted cash in the case of TBA transactions will be equivalent to the value of the TBA transaction listed as a Deposit Security or Redemption Security.

[7] In accepting Deposit Securities and satisfying redemptions with Redemption Securities that are restricted securities eligible for resale pursuant to rule 144A under the Securities Act, the relevant Funds will comply with the conditions of rule 144A, including in satisfying redemptions with such rule 144A eligible restricted Redemption Securities. The Prospectus will also state that an Authorized Participant that is not a ''Qualified Institutional Buyer'' as defined in rule 144A under the Securities Act will not be able to receive, as part of a redemption, restricted securities eligible for resale under rule 144A.

[8] Applicants note that under accounting procedures followed by the Funds, trades made on the prior Business Day (''T'') will be booked and reflected in NAV on the current Business Day (''T + 1''). Accordingly, the Funds will be able to disclose at the beginning of the Business Day the portfolio that will form the basis for the NAV calculation at the end of the Business Day.

company, to issue Shares that are redeemable in Creation Units only. Applicants state that investors may purchase Shares in Creation Units from each Fund and redeem Creation Units from each Fund. Applicants further state that because the market price of Shares will be disciplined by arbitrage opportunities, investors should be able to sell Shares in the secondary market at prices that do not vary substantially from their NAV.

Section 22(d) of the Act and Rule 22c–1 Under the Act

4. Section 22(d) of the Act, among other things, prohibits a dealer from selling a redeemable security, which is currently being offered to the public by or through a principal underwriter, except at a current public offering price described in the prospectus. Rule 22c–1 under the Act generally requires that a dealer selling, redeeming, or repurchasing a redeemable security do so only at a price based on its NAV. Applicants state that secondary market trading in Shares will take place at negotiated prices, not at a current offering price described in the prospectus, and not at a price based on NAV. Thus, purchases and sales of Shares in the secondary market will not comply with section 22(d) of the Act and rule 22c–1 under the Act. Applicants request an exemption under section 6(c) from these provisions.

5. Applicants assert that the concerns sought to be addressed by section 22(d) of the Act and rule 22c–1 under the Act with respect to pricing are equally satisfied by the proposed method of pricing Shares. Applicants maintain that while there is little legislative history regarding section 22(d), its provisions, as well as those of rule 22c–1, appear to have been designed to (a) prevent dilution caused by certain riskless-trading schemes by principal underwriters and contract dealers, (b) prevent unjust discrimination or preferential treatment among buyers resulting from sales at different prices, and (c) assure an orderly distribution of investment company shares by eliminating price competition from dealers offering shares at less than the published sales price and repurchasing shares at more than the published redemption price.

6. Applicants believe that none of these purposes will be thwarted by permitting Shares to trade in the secondary market at negotiated prices. Applicants state that (a) secondary market trading in Shares does not involve the Funds as parties and cannot result in dilution of an investment in Shares, and (b) to the extent different prices exist during a given trading day, or from day to day, such variances occur as a result of third-party market forces, such as supply and demand. Therefore, applicants assert that secondary market transactions in Shares will not lead to discrimination or preferential treatment among purchasers. Finally, applicants contend that the proposed distribution system will be orderly because arbitrage activity will ensure that the difference between the market price of Shares and their NAV remains narrow.

Section 22(e)

7. Section 22(e) of the Act generally prohibits a registered investment company from suspending the right of redemption or postponing the date of payment of redemption proceeds for more than seven days after the tender of a security for redemption. Applicants state that settlement of redemptions for the Foreign Funds is contingent not only on the settlement cycle of the United States market, but also on currently practicable delivery cycles in local markets for underlying foreign securities held by the Foreign Funds. Applicants state that local market delivery cycles for transferring Shares to redeeming investors, coupled with local market holiday schedules, will, under certain circumstances, require a delivery process longer than seven calendar days for Foreign Funds. Applicants request relief under section 6(c) of the Act from section 22(e) to allow the Foreign Funds to pay redemption proceeds up to 14 calendar days after the tender of any Creation Units for redemption. Except as disclosed in the relevant Foreign Fund's Prospectus and/or SAI, applicants expect that each Foreign Fund will be able to deliver redemption proceeds within seven days.[9] With respect to future Foreign Funds, applicants seek the same relief from section 22(e) only to the extent that circumstances similar to those described in the application exist.

8. Applicants state that section 22(e) was designed to prevent unreasonable and unforeseen delays in the payment of redemption proceeds. Applicants assert that the requested relief will not lead to the problems that section 22(e) was designed to prevent. Applicants state that the SAI will disclose those local holidays (over the period of at least one year following the date of the SAI), if any, that are expected to prevent the delivery of redemption proceeds in seven calendar days, and the maximum number of days needed to deliver the proceeds for the relevant Foreign Fund. Applicants are not seeking relief from section 22(e) with respect to Foreign Funds that do not effect creations and redemptions of Creation Units in-kind.

Section 12(d)(1)

9. Section 12(d)(1)(A) of the Act prohibits a registered investment company from acquiring shares of an investment company if the securities represent more than 3% of the total outstanding voting stock of the acquired company, more than 5% of the total assets of the acquiring company, or, together with the securities of any other investment companies, more than 10% of the total assets of the acquiring company. Section 12(d)(1)(B) of the Act prohibits a registered open-end investment company, its principal underwriter, or any other broker or dealer from selling its shares to another investment company if the sale will cause the acquiring company to own more than 3% of the acquired company's voting stock, or if the sale will cause more than 10% of the acquired company's voting stock to be owned by investment companies generally.

10. Applicants request that the order permit certain investment companies registered under the Act to acquire Shares beyond the limitations in section 12(d)(1)(A) and permit the Funds, any principal underwriter for the Funds, and any broker or dealer registered under the Exchange Act (''Brokers''), to sell Shares beyond the limitations in section 12(d)(1)(B). Applicants request that these exemptions apply to: (1) any Fund that is currently or subsequently part of the same ''group of investment companies'' as the Initial Fund within the meaning of section 12(d)(1)(G)(ii) of the Act as well as any principal underwriter for the Funds and any Brokers selling Shares of a Fund to a Fund of Funds (as defined below); and (2) each management investment company or unit investment trust registered under the Act that is not part of the same ''group of investment companies'' as the Funds within the meaning of section 12(d)(1)(G)(ii) of the Act and that enters into a FOF Participation Agreement (as defined below) with a Fund (such management investment companies are referred to herein as ''Investing Management Companies,'' such unit investment trusts are referred to herein as ''Investing Trusts,'' and Investing Management Companies and Investing Trusts are ''Funds of Funds''). Funds of Funds do not include the Funds. Each

[9] Rule 15c6–1 under the Exchange Act requires that most securities be settled within three business days of the trade. Applicants acknowledge that no relief obtained from the requirements of section 22(e) will affect any obligations applicants may have under rule 15c6–1.

Investing Trust will have a sponsor (''Sponsor'') and each Investing Management Company will have an investment adviser within the meaning of Section 2(a)(20)(A) of the Act (''Fund of Funds Adviser'') that does not control, is not controlled by or under common control with the Adviser. Each Investing Management Company may also have one or more investment advisers within the meaning of Section 2(a)(20)(B) of the Act (each, a ''Fund of Funds Sub-Adviser'').

11. Applicants assert that the proposed transactions will not lead to any of the abuses that section 12(d)(1) was designed to prevent. Applicants submit that the proposed conditions to the requested relief address the concerns underlying the limits in section 12(d)(1), which include concerns about undue influence, excessive layering of fees and overly complex structures.

12. Applicants believe that neither the Fund of Funds nor a Fund of Funds Affiliate would be able to exert undue influence over the Funds.[10] To limit the control that a Fund of Funds may have over a Fund, applicants propose a condition prohibiting the Fund of Funds Adviser or Sponsor; any person controlling, controlled by, or under common with the Fund of Funds Adviser or Sponsor; and any investment company or issuer that would be an investment company but for sections 3(c)(1) or 3(c)(7) of the Act that is advised or sponsored by the Fund of Funds Adviser or advised or sponsored by the Sponsor, or any person controlling, controlled by, or under common control with the Fund of Funds Adviser or Sponsor (''Fund of Funds'' Advisory Group'') from controlling (individually or in the aggregate) a Fund within the meaning of section 2(a)(9) of the Act. The same prohibition would apply to any Fund of Funds Sub-Adviser; any person controlling, controlled by, or under common control with the Fund of Funds Sub-Adviser; and any investment company or issuer that would be an investment company but for section 3(c)(1) or 3(c)(7) of the Act (or portion of such investment company or issuer) advised or sponsored by the Fund of Funds Sub-Adviser or any person controlling, controlled by, or under common control with the Fund of Funds Sub-Adviser (''Fund of Funds'' Sub-Advisory Group'').

13. Applicants propose other conditions to limit the potential for undue influence over the Funds, including that no Fund of Funds or Fund of Funds Affiliate (except to the extent it is acting in its capacity as an investment adviser to a Fund) will cause a Fund to purchase a security in any offering of securities during the existence of any underwriting or selling syndicate of which a principal underwriter is an Underwriting Affiliate (''Affiliated Underwriting''). An ''Underwriting Affiliate'' is a principal underwriter in any underwriting or selling syndicate that is an officer, director, member of an advisory board, Fund of Funds Adviser, Fund of Funds Sub-Adviser, employee or Sponsor of a Fund of Funds, or a person of which any such officer, director, member of an advisory board, Fund of Funds Adviser, Fund of Funds Sub-Adviser, employee, or Sponsor is an affiliated person (except any person whose relationship to the Fund is covered by section 10(f) of the Act is not an Underwriting Affiliate).

14. Applicants do not believe that the proposed arrangement will involve excessive layering of fees. The board of directors or trustees of each Investing Management Company, including a majority of the disinterested directors or trustees, before approving any advisory contract under section 15 of the Act, will be required to determine that the advisory fees charged to the Investing Management Company are based on services provided that will be in addition to, rather than duplicative of, the services provided under the advisory contract(s) of any Fund in which the Investing Management Company may invest. In addition, the Fund of Funds Adviser, trustee of an Investing Trust (''Trustee'') or Sponsor, as applicable, will waive fees otherwise payable to it by the Fund of Funds in an amount at least equal to any compensation received from a Fund by the Fund of Funds Adviser, Trustee or Sponsor, or an affiliated person of the Fund of Funds Adviser, Trustee or Sponsor (other than any advisory fees), in connection with the investment by the Fund of Funds in the Funds. Applicants also state that any sales charges and/or service fees charged with respect to shares of a Fund of Funds will not exceed the limits applicable to a fund of funds set forth in Conduct Rule 2830 of the NASD (''Rule 2830'').

15. Applicants submit that the proposed arrangement will not create an overly complex fund structure. Applicants note that a Fund will be prohibited from acquiring securities of any investment company, or of any company relying on section 3(c)(1) or 3(c)(7) of the Act, in excess of the limits contained in section 12(d)(1)(A) of the Act.

16. To ensure that a Fund of Funds is aware of the terms and conditions of the requested order, the Fund of Funds must enter into an agreement with the respective Funds (''FOF Participation Agreement''). The FOF Participation Agreement will include an acknowledgement from the Fund of Funds that it may rely on the order only to invest in the Funds and not in any other investment company. The FOF Participation Agreement will further require any Fund of Funds that exceeds the 5% or 10% limitations in section 12(d)(1)(A)(ii) and (iii) to disclose in its prospectus that it may invest in ETFs and disclose, in ''plain English,'' in its prospectus the unique characteristics of the Fund of Funds investing in investment companies, including but not limited to the expense structure and any additional expenses of investing in investment companies.

Sections 17(a)(1) and (2) of the Act

17. Section 17(a)(1) and (2) of the Act generally prohibit an affiliated person of a registered investment company, or an affiliated person of such a person (''second tier affiliate''), from selling any security to or purchasing any security from the company. Section 2(a)(3) of the Act defines ''affiliated person'' to include any person directly or indirectly owning, controlling, or holding with power to vote 5% or more of the outstanding voting securities of the other person and any person directly or indirectly controlling, controlled by, or under common control with, the other person. Section 2(a)(9) of the Act provides that a control relationship will be presumed where one person owns more than 25% of another person's voting securities. The Funds may be deemed to be controlled by the Adviser or an entity controlling, controlled by or under common control with the Adviser and hence affiliated persons of each other. In addition, the Funds may be deemed to be under common control with any other registered investment company (or series thereof) advised by the Adviser or an entity controlling, controlled by or under common control with the Adviser (an ''Affiliated Fund''). Applicants state that because the definition of ''affiliated person'' includes any person owning 5% or more of an issuer's outstanding voting securities, every purchaser of a Creation Unit will be affiliated with the Fund so

[10] A ''Fund of Funds Affiliate'' is a Fund of Funds Adviser, Fund of Funds Sub-Adviser, Sponsor, promoter, and principal underwriter of a Fund of Funds, and any person controlling, controlled by, or under common control with any of those entities. A ''Fund Affiliate'' is the Adviser, any Sub-Adviser, promoter or principal underwriter of a Fund, or any person controlling, controlled by, or under common control with any of these entities.

long as fewer than twenty Creation Units are in existence, and any purchaser that owns more than 25% of a Fund's outstanding Shares will be affiliated with a Fund.

18. Applicants request an exemption from section 17(a) under sections 6(c) and 17(b), to permit in-kind purchases and redemptions by persons that are affiliated persons or second tier affiliates of the Funds solely by virtue of one or more of the following: (1) Holding 5% or more, or more than 25%, of the outstanding Shares of the Trust or one or more Funds; (2) an affiliation with a person with an ownership interest described in (1); or (3) holding 5% or more, or more than 25%, of the shares of one or more Affiliated Funds. Applicants also request an exemption in order to permit each Fund to sell Shares to and redeem Shares from, and engage in the in-kind transactions that would accompany such sales and redemptions with, any Fund of Funds of which it is an affiliated person or second tier affiliate.[11]

19. Applicants contend that no useful purpose would be served by prohibiting affiliated persons or second tier affiliates of a Fund from purchasing or redeeming Creation Units through ''in-kind'' transactions. The deposit procedure for in-kind purchases and the redemption procedure for in-kind redemptions will be the same for all purchases and redemptions. Deposit Securities and Redemption Securities will be valued under the same objective standards applied to valuing Portfolio Securities. Therefore, applicants state that in-kind purchases and redemptions will afford no opportunity for the affiliated persons and second tier affiliates described above to effect a transaction detrimental to the other holders of Shares. Applicants also believe that in-kind purchases and redemptions will not result in abusive self-dealing or overreaching by these persons of the Fund.

20. Applicants also submit that the sale of Shares to and redemption of Shares from a Fund of Funds satisfies the standards for relief under sections 17(b) and 6(c) of the Act. Applicants note that the consideration paid for the purchase or received for the redemption of Shares directly from a Fund by a Fund of Funds (or any other investor) will be based on the NAV of the Shares. In addition, the securities received or transferred by the Fund in connection with the purchase or redemption of Shares will be valued in the same manner as the Fund's Portfolio Securities and thus the transactions will not be detrimental to the Fund of Funds. Applicants also state that the proposed transactions will be consistent with the policies of each Fund of Funds and Fund and with the general purposes of the Act.

[11] Although applicants believe that most Fund of Funds will purchase and sell Shares in the secondary market, a Fund of Funds might seek to transact in Shares directly with a Fund.

Applicants' Conditions

The applicants agree that any order of the Commission granting the requested relief will be subject to the following conditions:

A. Actively Managed Exchange-Traded Fund Relief

1. The requested order will expire on the effective date of any Commission rule under the Act that provides relief permitting the operation of actively managed exchange-traded funds.

2. Each Fund's Prospectus will clearly disclose that, for purposes of the Act, Shares are issued by a registered investment company and that the acquisition of Shares by investment companies and companies relying on sections 3(c)(1) or 3(c)(7) of the Act is subject to the restrictions of section 12(d)(1) of the Act, except as permitted by an exemptive order that permits registered investment companies to invest in a Fund beyond the limits in section 12(d)(1), subject to certain terms and conditions, including that the registered investment company enter into a FOF Participation Agreement with the Fund regarding the terms of the investment.

3. As long as a Fund operates in reliance on the requested order, the Shares of the Fund will be listed on an Exchange.

4. Neither the Trust nor any Fund will be advertised or marketed as an open-end investment company or a mutual fund. Each Fund's Prospectus and advertising materials will prominently disclose that the Fund is an actively managed exchange-traded fund. Each Prospectus will prominently disclose that the Shares are not individually redeemable shares and will disclose that the owners of the Shares may acquire those Shares from the Fund and tender those Shares for redemption to the Fund in Creation Units only. Any advertising material that describes the purchase or sale of Creation Units or refers to redeemability will prominently disclose that the Shares are not individually redeemable and that owners of the Shares may acquire those Shares from the Fund and tender those Shares for redemption to the Fund in Creation Units only.

5. The Web site for the Trust, which is and will be publicly accessible at no charge, will contain the following information, on a per Share basis, for each Fund: (a) The prior Business Day's NAV and the Bid/Ask Price, and a calculation of the premium or discount of the Bid/Ask Price against such NAV; and (b) data in chart format displaying the frequency distribution of discounts and premiums of the daily Bid/Ask Price against the NAV, within appropriate ranges, for each of the four previous calendar quarters (or for the life of the Fund, if shorter).

6. The Prospectus and annual report for each Fund will also include: (a) The information listed in condition A.5(b), (i) in the case of the Prospectus, for the most recently completed year (and the most recently completed quarter or quarters, as applicable) and (ii) in the case of the annual report, for the immediately preceding five years (or for the life of the Fund, if shorter), and (b) the cumulative total return and the average annual total return based on NAV and Bid/Ask Price calculated on a per Share basis for one-, five- and ten-year periods (or for the life of the Fund, if shorter).

7. No Adviser or Sub-Adviser, directly or indirectly, will cause any Authorized Participant (or any investor on whose behalf an Authorized Participant may transact with the Fund) to acquire any Deposit Security for the Fund through a transaction in which the Fund could not engage directly.

8. On each Business Day, before commencement of trading in Shares on the Fund's listing Exchange, the Fund will disclose on its Web site the identities and quantities of the Portfolio Securities and other assets held by the Fund that will form the basis for the Fund's calculation of NAV at the end of the Business Day.

B. Section 12(d)(1) Relief

1. The members of the Fund of Funds' Advisory Group will not control (individually or in the aggregate) a Fund within the meaning of section 2(a)(9) of the Act. The members of the Fund of Funds' Sub-Advisory Group will not control (individually or in the aggregate) a Fund within the meaning of section 2(a)(9) of the Act. If, as a result of a decrease in the outstanding voting securities of a Fund, the Fund of Funds' Advisory Group or the Fund of Funds' Sub-Advisory Group, each in the aggregate, becomes a holder of more than 25 percent of the outstanding voting securities of a Fund, it will vote its Shares of the Fund in the same proportion as the vote of all other holders of the Fund's Shares. This

condition does not apply to the Fund of Funds' Sub-Advisory Group with respect to a Fund for which the Fund of Funds Sub-Adviser or a person controlling, controlled by or under common control with the Fund of Funds Sub-Adviser acts as the investment adviser within the meaning of section 2(a)(20)(A) of the Act.

2. No Fund of Funds or Fund of Funds Affiliate will cause any existing or potential investment by the Fund of Funds in a Fund to influence the terms of any services or transactions between the Fund of Funds or a Fund of Funds Affiliate and the Fund or a Fund Affiliate.

3. The board of directors or trustees of an Investing Management Company, including a majority of the disinterested directors or trustees, will adopt procedures reasonably designed to assure that the Fund of Funds Adviser and any Fund of Funds Sub-Adviser are conducting the investment program of the Investing Management Company without taking into account any consideration received by the Investing Management Company or a Fund of Funds Affiliate from a Fund or a Fund Affiliate in connection with any services or transactions.

4. Once an investment by a Fund of Funds in the securities of a Fund exceeds the limit in section l2(d)(1)(A)(i) of the Act, the board of trustees (''Board'') of a Fund, including a majority of the disinterested Board members, will determine that any consideration paid by the Fund to the Fund of Funds or a Fund of Funds Affiliate in connection with any services or transactions: (i) Is fair and reasonable in relation to the nature and quality of the services and benefits received by the Fund; (ii) is within the range of consideration that the Fund would be required to pay to another unaffiliated entity in connection with the same services or transactions; and (iii) does not involve overreaching on the part of any person concerned. This condition does not apply with respect to any services or transactions between a Fund and its investment adviser(s), or any person controlling, controlled by or under common control with such investment adviser(s).

5. The Fund of Funds Adviser, or Trustee or Sponsor, as applicable, will waive fees otherwise payable to it by the Fund of Funds in an amount at least equal to any compensation (including fees received pursuant to any plan adopted by a Fund under rule 12b–l under the Act) received from a Fund by the Fund of Funds Adviser, or Trustee or Sponsor of the Investing Trust, or an affiliated person of the Fund of Funds Adviser, or Trustee or Sponsor of the Investing Trust, other than any advisory fees paid to the Fund of Funds Adviser, or Trustee or Sponsor of the Investing Trust, or its affiliated person by the Fund, in connection with the investment by the Fund of Funds in the Fund. Any Fund of Funds Sub-Adviser will waive fees otherwise payable to the Fund of Funds Sub-Adviser, directly or indirectly, by the Investing Management Company in an amount at least equal to any compensation received from a Fund by the Fund of Funds Sub-Adviser, or an affiliated person of the Fund of Funds Sub-Adviser, other than any advisory fees paid to the Fund of Funds Sub-Adviser or its affiliated person by the Fund, in connection with the investment by the Investing Management Company in the Fund made at the direction of the Fund of Funds Sub-Adviser. In the event that the Fund of Funds Sub-Adviser waives fees, the benefit of the waiver will be passed through to the Investing Management Company.

6. No Fund of Funds or Fund of Funds Affiliate (except to the extent it is acting in its capacity as an investment adviser to a Fund) will cause a Fund to purchase a security in an Affiliated Underwriting.

7. The Board of the Fund, including a majority of the disinterested Board members, will adopt procedures reasonably designed to monitor any purchases of securities by the Fund in an Affiliated Underwriting, once an investment by a Fund of Funds in the securities of the Fund exceeds the limit of section 12(d)(1)(A)(i) of the Act, including any purchases made directly from an Underwriting Affiliate. The Board will review these purchases periodically, but no less frequently than annually, to determine whether the purchases were influenced by the investment by the Fund of Funds in the Fund. The Board will consider, among other things: (i) Whether the purchases were consistent with the investment objectives and policies of the Fund; (ii) how the performance of securities purchased in an Affiliated Underwriting compares to the performance of comparable securities purchased during a comparable period of time in underwritings other than Affiliated Underwritings or to a benchmark such as a comparable market index; and (iii) whether the amount of securities purchased by the Fund in Affiliated Underwritings and the amount purchased directly from an Underwriting Affiliate have changed significantly from prior years. The Board will take any appropriate actions based on its review, including, if appropriate, the institution of procedures designed to assure that purchases of securities in Affiliated Underwritings are in the best interest of shareholders.

8. Each Fund will maintain and preserve permanently in an easily accessible place a written copy of the procedures described in the preceding condition, and any modifications to such procedures, and will maintain and preserve for a period of not less than six years from the end of the fiscal year in which any purchase in an Affiliated Underwriting occurred, the first two years in an easily accessible place, a written record of each purchase of securities in Affiliated Underwritings once an investment by a Fund of Funds in the securities of the Fund exceeds the limit of section 12(d)(1)(A)(i) of the Act, setting forth from whom the securities were acquired, the identity of the underwriting syndicate's members, the terms of the purchase, and the information or materials upon which the Board's determinations were made.

9. Before investing in a Fund in excess of the limit in section 12(d)(1)(A), a Fund of Funds will execute a FOF Participation Agreement with the Fund stating that their respective boards of directors or trustees and their investment Advisers, or Trustee and Sponsor, as applicable, understand the terms and conditions of the order, and agree to fulfill their responsibilities under the order. At the time of its investment in Shares of a Fund in excess of the limit in section 12(d)(1)(A)(i), a Fund of Funds will notify the Fund of the investment. At such time, the Fund of Funds will also transmit to the Fund a list of the names of each Fund of Funds Affiliate and Underwriting Affiliate. The Fund of Funds will notify the Fund of any changes to the list as soon as reasonably practicable after a change occurs. The Fund and the Fund of Funds will maintain and preserve a copy of the order, the FOF Participation Agreement, and the list with any updated information for the duration of the investment and for a period of not less than six years thereafter, the first two years in an easily accessible place.

10. Before approving any advisory contract under section 15 of the Act, the board of directors or trustees of each Investing Management Company, including a majority of the disinterested directors or trustees, will find that the advisory fees charged under such contract are based on services provided that will be in addition to, rather than duplicative of, the services provided under the advisory contract(s) of any Fund in which the Investing

Management Company may invest. These findings and their basis will be recorded fully in the minute books of the appropriate Investing Management Company.

11. Any sales charges and/or service fees charged with respect to shares of a Fund of Funds will not exceed the limits applicable to a Fund of Funds as set forth in Rule 2830.

12. No Fund will acquire securities of an investment company or company relying on section 3(c)(1) or 3(c)(7) of the Act in excess of the limits contained in section 12(d)(1)(A) of the Act.

For the Commission, by the Division of Investment Management, under delegated authority.

Florence E. Harmon,

Acting Secretary.

[FR Doc. E8–31089 Filed 12–30–08; 8:45 am]

BILLING CODE 8011–01–P

SECURITIES AND EXCHANGE COMMISSION

[Release No. IC–28570; File No. 812–13402]

Sun Life Assurance Company of Canada (U.S.), et al., Notice of Application

December 23, 2008.

AGENCY: Securities and Exchange Commission (the ''Commission'').

ACTION: Notice of application for an order of approval pursuant to Section 26(c) of the Investment Company Act of 1940, as amended (the ''Act''), and an order of exemption pursuant to Section 17(b) of the Act from Section 17(a) of the Act.

Applicants: Sun Life Assurance Company of Canada (U.S.) (''Sun Life U.S.''), Sun Life Insurance and Annuity Company of New York (''Sun Life N.Y.'') (together with Sun Life U.S., the ''Companies''), Sun Life of Canada (U.S.) Variable Account F (''Account F''), Sun Life of Canada (U.S.) Variable Account G (''Account G''), Sun Life of Canada (U.S.) Variable Account I (''Account I''), Sun Life (N.Y.) Variable Account C (''Account C''), Sun Life (N.Y.) Variable Account D (''Account D''), and Sun Life (N.Y.) Variable Account J (''Account J'') (collectively, the ''Applicants''). Applicants, together with Sun Capital Advisers Trust (''Sun Capital Trust'') are ''Section 17(b) Applicants.''

Summary of Application: Applicants seek an order approving the proposed substitutions (the ''Substitutions'') under certain variable life insurance policies and variable annuity contracts (''Contracts'') of Class VC shares of the Lord Abbett Growth and Income Portfolio and the Lord Abbett Mid-Cap Value Portfolio of Lord Abbett Series Fund, Inc. (''LA Series''), and Administrative Class shares of the PIMCO High Yield Portfolio and the PIMCO Low Duration Portfolio of the PIMCO Variable Insurance Trust with Initial Class shares of the following portfolios of Sun Capital Trust, respectively: The SC Lord Abbett Growth & Income Fund, the SC Goldman Sachs Mid Cap Value Fund, the SC PIMCO High Yield Fund, and the SC Goldman Sachs Short Duration Fund. Section 17(b) Applicants also seek an order pursuant to Section 17(b) of the Act to permit certain in-kind transactions in connection with the Substitutions.

Filing Date: The application was originally filed on July 9, 2007, and an amended and restated application was filed on December 18, 2008.

Hearing or Notification of Hearing: An order granting the application will be issued unless the Commission orders a hearing. Interested persons may request a hearing by writing to the Secretary of the Commission and serving Applicants with a copy of the request, personally or by mail. Hearing requests must be received by the Commission by 5:30 p.m. on January 21, 2009, and should be accompanied by proof of service on Applicants in the form of an affidavit or, for lawyers, a certificate of service. Hearing requests should state the nature of the requester's interest, the reason for the request, and the issues contested. Persons who wish to be notified of a hearing may request notification by writing to the Secretary of the Commission.

ADDRESSES: The Commission: Secretary, Securities and Exchange Commission, 100 F Street, NE., Washington, DC 20549–1090; *Applicants:* c/o Maura A. Murphy, Esq., Sun Life Assurance Company of Canada (U.S.), One Sun Life Executive Park, Wellesley Hills, Massachusetts 02481.

FOR FURTHER INFORMATION CONTACT: Rebecca A. Marquigny, Senior Counsel, or Joyce M. Pickholz, Branch Chief, Office of Insurance Products, Division of Investment Management, at (202) 551–6795.

SUPPLEMENTARY INFORMATION: The following is a summary of the application. The complete application is available for a fee from the Public Reference Branch of the Commission, 100 F Street, NE., Washington, DC 20549 (202–551–8090).

Applicants' and Section 17 Applicants' Representations and Conditions:

1. Sun Life U.S. is a stock life insurance company ultimately controlled by Sun Life Financial Inc. (''Sun Life Financial''), a Canadian reporting company under the Securities Exchange Act of 1934 (the ''1934 Act''). Sun Life U.S. is the depositor and sponsor of Account F, Account G, and Account I.

2. Account F is registered as a unit investment trust (File No. 811–05846); its interests are offered through Contracts (the ''Account F Contracts'') registered under the Securities Act of 1933 (''1933 Act'') on Form N–4 (File Nos. 033–41628, 333–37907, 333–05227, 333–30844, 333–31248, 333–41438, 333–74844, 333–82957, 333–83362, 333–83364, 333–83516, 333–115536, and 333–115525). Similarly, Account G, registered as a unit investment trust (File No. 811–07837) offers its interests through Contracts (the ''Account G Contracts'') registered under the 1933 Act on Form N–6 (File Nos. 333–65048, 333–13087, and 333–111688). Account I, registered as a unit investment trust (File No. 811–09137) also offers its interests through Contracts (the ''Account I Contracts'') registered under the 1933 Act on Form N–6 (File Nos. 333–68601, 333–100831, 333–59662, 333–100829, 333–94359, 333–143353, 333–143354, and 333–144628).

3. Sun Life N.Y., a wholly owned subsidiary of Sun Life U.S., is a stock life insurance company and is the depositor and sponsor of Account C, Account D, and Account J.

4. Account C, a registered unit investment trust (File No. 811–04440), also offers its interests through certain Contracts (the ''Account C Contracts'') registered under the 1933 Act on Form N–4 (File Nos. 333–05037, 333–67864, 333–119151, 333–119154, 333–100474, 333–107983, 333–99907, and 333–100475). Similarly, Account D, registered as a unit investment trust (File No. 811–04633) offers its interests through Contracts (the ''Account D Contracts'') registered under the 2933 Act on Form N–6 (File Nos. 333–105437, 333–105438, and 333–105441). Account J, registered as a unit investment trust (File No. 811–21937) also offers its interests through Contracts (the ''Account J Contracts'') registered under the 1933 Act on Form N–6 (File Nos. 333–136433 and 333–136435).

5. All of the Contracts involved in the Substitutions (a) reserve the right to substitute shares of one portfolio for shares of another; (b) permit transfers of contract value among the subaccounts pursuant to the limitations of the particular Contract, (c) impose or

reserve the right to impose a transfer charge (except Accounts G and J); and (d) are subject to market timing policies and procedures that may operate to limit transfers.

6. Applicants represent that all of the portfolios involved in the Substitutions are currently available to new and existing Contract owners (and will continue to be available until the time the substitutions occur) for the allocation of purchase payments and transfer of contract value.

7. Lord Abbett Growth and Income Portfolio (''Old Growth & Income'') and Lord Abbett Mid-Cap Value Portfolio (''Old Mid-Cap Value'') (each, individually, an ''Old Portfolio'' and collectively, ''Old LA Portfolios'') are portfolios of LA Series, a registered, diversified, open-end management investment company (File No. 811–05876). Class VC shares of Old LA Portfolios are registered under the 1933 Act on Form N–1A (File No. 33–31072). The investment adviser to Old LA Portfolios is Lord Abbett & Co., LLC (''Lord Abbett'').

8. PIMCO High Yield Portfolio (''Old High Yield'') and PIMCO Low Duration Portfolio (''Old Low Duration'') (each, individually, an ''Old Portfolio'' and collectively, ''Old PIMCO Portfolios'') are portfolios of PIMCO Variable Insurance Trust, a registered, diversified, open-end management investment company (File No. 811–08399). Administrative Class shares of Old PIMCO Portfolios are registered under the 1933 Act on Form N–1A (File No. 333–37115). The investment adviser to Old PIMCO Portfolios is Pacific Investment Management Company LLC (''PIMCO'').

9. The following ''New Portfolios'' (each, individually, a ''New Portfolio'') are portfolios of Sun Capital Trust, a registered, diversified, open-end management investment company (File No. 811–08879): SC Lord Abbett Growth & Income Fund (''New Growth & Income''), SC Goldman Sachs Mid Cap Value Fund (''New Mid Cap Value''), SC PIMCO High Yield Fund (''New High Yield''), and SC Goldman Sachs Short Duration Fund (''New Short Duration''). Initial Class shares of New Portfolios are registered under the 1933 Act on Form N–1A (File No. 333–59093) and are not subject to a distribution fee.

10. Sun Capital Advisers LLC (''Sun Capital''), an indirect, wholly owned subsidiary of Sun Life Financial, is investment adviser to all the Sun Capital Trust portfolios. Through an order from the Commission pursuant to Section 6(c) of the Act, Sun Capital is exempt from Section 15(a) of the Act and Rule 18f-2 thereunder with respect to subadvisory agreements (the ''Manager of Managers Order'').[1]

11. Applicants represent that the relief granted in the Manager of Managers Order extends to New Portfolios permitting Sun Capital to enter into and materially amend investment subadvisory agreements without obtaining shareholder approval. Applicants also indicate that the prospectus for the New Portfolios will disclose and explain the existence, substance and effect of the Manager of Managers Order.

12. Applicants propose to substitute Initial Class shares of (a) New Growth & Income for Class VC shares of Old Growth & Income; (b) New Mid Cap Value for Class VC shares of Old Mid Cap Value; (c) New High Yield for Administrative Class shares of Old High Yield; and (d) New Short Duration for Administrative Class shares of Old Low Duration. Applicants state that the proposed Substitutions are not intended to effect an overall reorganization or merger of any of the underlying investment options offered in the Contracts. Applicants assert their belief that:

(a) Reducing the number of nonproprietary funds will provide the Companies with more control over fund changes that affect the Contracts;

(b) The New Portfolios better promote their goals of increasing administrative efficiency of, and control over, their Contracts as the New Portfolios are part of their proprietary fund family;

(c) This streamlining will allow the Companies to enhance their communication efforts to Contract owners and sales representatives regarding the available portfolios, and may provide for more enhanced and timely reporting from the Companies to Contract owners with respect to changes in the underlying funds.

13. Applicants represent that because the New Portfolios operate pursuant to the Manager of Managers Order (and assuming that the Applicants first obtain shareholder approval of a change in a New Portfolio's subadviser or of a New Portfolio's continued ability to rely on the Manager of Manager's Order), the Substitutions would provide protection to Contract owners by giving Sun Capital the agility and flexibility to change the subadviser of the New Portfolios should such a change become warranted or advisable. In support of the Substitutions, Applicants assert that the investment objectives and policies of the New Portfolios are sufficiently similar to those of the corresponding Old Portfolios that Contract owners will have reasonable continuity in investment expectations. The following summarizes the more complete comparison of New and Old Portfolios provided in the Application.

14. *Growth & Income Portfolio Substitution*

Applicants state that both Old Growth & Income and New Growth & Income share the identical investment objective to ''seek long-term growth of capital and income without excessive fluctuations in market value.'' Applicants state that the principal investment strategies of the two portfolios are virtually identical noting that both invest at least 80% of net assets in equity securities of large companies defined as those having capitalization within the range of the companies in the Russell 1000 Index at the time of purchase. Both portfolios primarily purchase equity securities of large, seasoned, U.S. and multinational companies that are believed to be undervalued, and both attempt to invest in securities selling at reasonable prices in relation to their potential value. Applicants also represent that both portfolios share substantially similar risk profiles.

Charges for Class VC of Old Growth & Income include Management Fees of 0.47% and Other Expenses of 0.41%.[2] Total Operating Expenses for Initial Class shares of New Growth & Income are 0.88% which represents 0.01% in Other Expenses and a 0.87% unified management fee (subject to a 0.87% contractual limitation on Total Operating Expenses). Neither portfolio charges a 12b–1 Fee. Old Growth & Income's total gross and net operating expenses are both 0.88%. Respectively, New Growth & Income's total gross and net operating expenses are 0.88% and 0.87% (reflecting the contractual expense limitation agreement).

15. *Mid Cap Value Portfolio Substitution*

Applicants state that both Old Mid Cap Value and New Mid Cap Value share a similar investment objective because Old Mid Cap Value ''seeks capital appreciation through investments, primarily in equity securities, which are believed to be undervalued in the marketplace'' and New Mid Cap Value ''seeks long-term return of capital.'' Applicants state that

[1] *Sun Capital Advisers Trust and Sun Capital Advisers, Inc.,* 1940 Act Rel. No. 24401 (April 24, 2000) (Order), File No. 812–11790; *see also Sun Capital Advisers Trust and Sun Capital Advisers, Inc.,* 1940 Act Rel. No. 23793 (Apr. 20, 1999) (Order), File No. 812–11464.

[2] For the descriptions of charges involved in the Substitution, all percentages for the Management Fees, 12b–1 Fees, Other Expenses, Fee Reductions, Total Gross and Net Annual Operating Expenses, and Separate Account Fees represent a percentage of average annual assets.

the principal investment strategies of the two portfolios are similar noting that both employ a value approach to investing and normally invest at least 80% of net assets, plus the amount of any borrowings for investment purposes, in securities of mid-sized companies. Applicants represent that both Old Mid Cap Value and New Mid Cap Value have substantially similar risk characteristics which are presented in greater detail in the Application.

Charges for Class VC of Old Mid Cap Value include Management Fees of 0.74% and Other Expenses of 0.38%. Total Operating Expenses for Initial Class shares of New Mid Cap Value are 1.06% which represents 0.01% in Other Expenses and a 1.05% unified management fee (subject to a 1.07% contractual limitation on Total Operating Expenses). Neither portfolio charges a 12b–1 Fee. Old Mid Cap Value's total gross and net operating expenses are both 1.12% while New Mid Cap Value's total gross and net operating expenses are both 1.06%.

16. *High Yield Portfolio Substitutions*

Applicants represent that Old High Yield and New High Yield share a virtually identical investment objective because New High Yield seeks ''maximum total return, consistent with capital preservation'' and Old High Yield seeks the same ''and prudent investment management.'' Applicants represent that under normal circumstances both invest at least 80% of assets in a diversified portfolio of high yield junk bonds rated at least Caa by Moody's or equivalently rated by S&P or Fitch, or, if unrated, determined by the adviser or subadviser to be of comparable quality. Applicants state that neither portfolio may invest more than 5% of total assets in securities of equal or lower rating. Applicants represent that both portfolios employ an average portfolio duration within a two-to-six year time frame and may invest up to the same percentages of total assets in issuers located in countries with developing economies. Applicants assert that the limits for investment in foreign currency denominated securities and U.S. dollar-denominated securities of foreign issuers are the same for both portfolios. Applicants also identify other similar strategies including that both portfolios may invest all of their assets in derivative instruments. In addition, Applicants represent that both Old High Yield and New High Yield have substantially similar risk characteristics discussed at length in the Application.

Charges for Administrative Class shares of Old High Yield include Management Fees of 0.25%, Service Fees of 0.15%, and Other Expenses of 0.35%. Charges for Initial Class shares of New High Yield include a 0.74% unified management fee and 0.01% in Other Expenses. New High Yield does not charge a service fee, and neither portfolio charges a 12b–1 Fee. The total gross and net operating expenses for both Old High Yield and New High Yield are 0.75%. In addition, New High Yield's fees are also subject to a 0.75% contractual expense limitation on total operating expenses for at least 24 months following the date of the Substitutions.

17. *Low/Short Duration Portfolio Substitutions*

Applicants represent that Old Low Duration and New Short Duration share a similar investment objective in that Old Low Duration ''seeks maximum total return, consistent with preservation of capital and prudent investment management,'' while New Short Duration ''primarily seeks a high level of current income, with capital appreciation as a secondary goal.'' Applicants also represent that the principal investment strategies of the two portfolios are similar. Both invest primarily in fixed income securities at levels of total assets equal to at least 65% for Old Low Duration and 80% for New Short Duration. In addition, Applicants represent that both Old Low Duration and New Short Duration have similar risk characteristics discussed at length in the Application.

Charges for Administrative Class shares of Old Low Duration include Management Fees of 0.25%, Service Fees of 0.15%, and Other Expenses of 0.25%. Charges for Initial Class shares of New Short Duration include a 0.64% unified management fee and 0.01% in Other Expenses. New Short Duration does not charge a service fee, and neither portfolio charges a 12b–1 Fee. The total gross and net operating expenses for both Old Low Duration and New Short Duration are 0.65%. In addition, New Short Duration's fees are also subject to a 0.65% contractual expense limitation on total operating expenses for at least 24 months following the date of the Substitutions.

18. Applicants assert that as of the effective date of the Substitutions (''Effective Date'' or ''Substitution Date''), each Separate Account will redeem shares of the applicable Old Portfolio in-kind. Applicants state that if Sun Capital declines to accept particular portfolio securities of any of the Old Portfolios for purchase in-kind of shares of the New Portfolios, the applicable Old Portfolio will liquidate portfolio securities as necessary, and shares of the New Portfolio will be purchased with cash. Applicants represent that in either event, the proceeds of such redemptions will then be used to purchase shares of the New Portfolios, with each subaccount of the applicable Separate Account investing the proceeds of its redemption from the Old Portfolios in the applicable New Portfolio.

19. Applicants further state that redemption requests and purchase orders will be placed simultaneously so that contract values will remain fully invested at all times. Applicants represent that all redemptions of shares of the Old Portfolios and purchases of shares of the New Portfolios will be effected in accordance with Section 22(c) of the Act and Rule 22c–1 thereunder. Applicants state that the Substitutions will take place at relative net asset value as of the Effective Date with no change in the amount of any Contract owner's contract value or death benefit or in the dollar value of his or her investments in any of the subaccounts. Applicants represent that Contract values attributable to investments in the Old Portfolios will be transferred to the New Portfolios without charge and without counting toward the number of transfers that may be permitted without charge.

20. Applicants further represent that all expenses incurred in connection with the Substitutions, including legal, accounting, transactional, and other fees and expenses, including brokerage commissions, will be paid by Sun Life U.S. or Sun Life N.Y. Applicants also state that, as a result of the Substitutions, Contract owners will not incur any additional fees or charges, nor will their rights or insurance benefits or the Companies' obligations under the Contracts be altered. Applicants assert that the Substitutions: (a) Will not impose any tax liability on Contract owners; and (b) will not cause the Contract fees and charges currently being paid by existing Contract owners to be greater after the Substitutions than before the Substitutions. Applicants represent that neither Sun Life U.S. nor Sun Life N.Y. will exercise any right either may have under the Contracts to impose restrictions on transfers under the Contracts for the period from the date the Application was filed with the Commission through at least thirty days following the Effective Date.

21. The Companies represent that during the twenty-four months following the Effective Date, the total net operating expenses of each New Portfolio (taking into account any expense waiver or reimbursement) will not exceed the net expense level of the corresponding Old Portfolio for the fiscal year ended December 31, 2007.

Applicants also state that for at least twenty-four months following the date of the Substitutions, Sun Capital has contractually agreed to waive its management fee and, if necessary, to limit other ordinary operating expenses so that total operating expenses, as a percentage of average net assets, do not exceed 0.87%, 1.07%, 0.75%, or 0.65%, as applicable. In addition, Applicants represent that for twenty-four months following the date of the Substitutions, the Companies will not increase asset-based fees or charges for Contracts outstanding on the Effective Date.

22. Applicants represent that a prospectus for the New Portfolio containing disclosure describing the existence, substance and effect of the Manager of Managers Order will be provided to each Contract owner prior to or at the time of the Substitutions. Notwithstanding the Manager of Managers Order, the Applicants agree not to change any New Portfolio's subadviser, add a new subadviser, or otherwise rely on the Manager of Managers Order without first obtaining shareholder approval, following the Effective Date of the Substitutions, of either: (1) The subadviser change; or (2) the New Portfolio's continued ability to rely on the Manager of Managers Order.

23. Applicants state that Contract owners were or will be notified of the proposed Substitutions by means of a prospectus or prospectus supplement for each of the Contracts stating that the Applicants filed the Application and seek approval for the Substitutions (''Pre-Substitution Notice''). The Pre-Substitution Notice sets forth the anticipated Effective Date and explains that contract values attributable to investments in the Old Portfolios will be transferred to the New Portfolios on the Effective Date without charge (including sales charges or surrender charges) and without counting toward the number of transfers that may be permitted without charge. Applicants indicate that the Pre-Substitution Notice states that, from the date the initial application was filed with the Commission through the date thirty days after the Substitutions, Contract owners may make one transfer of contract value from each subaccount investing in the Old Portfolios (before the Substitutions) or a New Portfolio (after the Substitutions) to one or more other subaccount(s) without a transfer charge and without that transfer counting against their contractual transfer limitations.

24. Applicants represent that all Contract owners will have received a copy of the most recent prospectus for the New Portfolios prior to the Substitutions. Applicants also agree that, within five days following the Substitutions, Contract owners affected by the Substitutions will be notified in writing that the Substitutions were carried out and that this notice will restate the information set forth in the Pre-Substitution Notice.

Applicants' Legal Analysis

1. Section 26(c) of the Act makes it unlawful for any depositor or trustee of a registered unit investment trust holding the security of a single issuer to substitute another security for such security unless the Commission approves the substitution. The Commission shall approve such a substitution if the evidence establishes that it is consistent with the protection of investors and the purposes fairly intended by the policy and provisions of the Act.

2. Applicants submit that the Substitutions meet the standards set forth in Section 26(c) and assert that replacement of the Old Portfolios with the New Portfolio is consistent with the protection of Contract owners and the purposes fairly intended by the policy and provisions of the Act. Applicants have reserved the right to make such a substitution under the Contracts and represent that this reserved right is disclosed in the prospectus for the Contracts.

3. Section 17(a)(1) of the Act, in relevant part, prohibits any affiliated person of a registered investment company, or any affiliated person of such person, acting as principal, from knowingly selling any security or other property to that company. Section 17(a)(2) of the Act generally prohibits the persons described above, acting as principal, from knowingly purchasing any security or other property from the registered company. Pursuant to Section 17(a)(1) of the Act, the Section 17(b) Applicants may be considered affiliates of one or more of the portfolios involved in the Substitutions. Because the Substitutions may be effected, in whole or in part, by means of in-kind redemptions and subsequent purchases of shares and by means of in-kind transactions, the Substitutions may be deemed to involve one or more purchases or sales of securities or property between affiliates.

4. Section 17(b) of the Act provides that the Commission may, upon application, grant an order exempting any transaction from the prohibitions of Section 17(a) if the evidence establishes that: the terms of the proposed transaction, including the consideration to be paid or received, are reasonable and fair and do not involve overreaching on the part of any person concerned; the proposed transaction is consistent with the policy of each registered investment company concerned, as recited in its registration statement and records filed under the Act; and the proposed transaction is consistent with the general purposes of the Act.

5. The Section 17(b) Applicants state that the terms under which the in-kind redemptions and purchases will be effected are reasonable and fair and do not involve overreaching on the part of any person principally because the Substitutions will conform with all but one of the conditions enumerated in Rule 17a–7. Applicants assert that the use of in-kind transactions will not cause Contract owner interests to be diluted. In support, Applicants represent that: (a) The proposed transactions will take place at relative net asset value as of the Effective Date in conformity with the requirements of Section 22(c) of the 1940 Act and Rule 22c–1 thereunder with no change in the amount of any Contract owner's contract value or death benefit or in the dollar value of his or her investment in any of the Separate Accounts; (b) Contract owners will not suffer any adverse tax consequences as a result of the Substitutions; and (c) fees and charges under the Contracts will not increase because of the Substitutions.

6. Further, though the Section 17(b) Applicants may not rely on Rule 17a–7 because they cannot meet all of its conditions, the Section 17(b) Applicants agree to carry out the proposed in-kind purchases in conformity with all of the conditions of Rule 17a–7 and the procedures adopted thereunder, except that the consideration paid for the securities being purchased or sold may not be entirely cash. However, Applicants assert that the circumstances surrounding the Substitutions will offer the same degree of protection to the New Portfolios from overreaching that Rule 17a–7 provides to it generally in connection with its purchase and sale of securities under that Rule in the ordinary course of its business.

7. Applicants assert that the Board of Sun Capital Trust has adopted procedures, as required by paragraph (e)(1) of Rule 17a–7, pursuant to which its portfolios may purchase and sell securities to and from their affiliates. Applicants also note that the Companies (or any of their affiliates) cannot effect the proposed Substitutions at a price disadvantageous to the New Portfolio. Although the Substitutions may not be entirely for cash, Applicants represent that each will be effected based upon (1) the independent market price of the portfolio securities valued as specified

in paragraph (b) of Rule 17a–7, and (2) the net asset value per share of each portfolio involved valued according to the procedures disclosed in its registration statement and as required by Rule 22c–1 under the Act. The Section 17(b) Applicants state that if Sun Capital declines to accept particular portfolio securities of either of the Old Portfolios for purchase in-kind of shares of a New Portfolio, the applicable Old Portfolio will liquidate portfolio securities as necessary and shares of the New Portfolios will be purchased with cash. Consistent with Rule 17a–7(d), Applicants also agree that no brokerage commissions, fees, or other remuneration will be paid in connection with the in-kind transactions.

Conclusions

1. Applicants submit that for the reasons and upon the facts set forth in their application, the requested order pursuant to Section 26(c) of the Act is consistent with the protection of investors and the purposes fairly intended by the policy of the Contracts and provisions of the Act and should, therefore, be granted.

2. Section 17 Applicants represent that the proposed in-kind transactions are consistent with the general purposes of the Act, do not present any of the conditions or abuses the Act was designed to prevent, and that an exemption should be granted, to the extent necessary, from the provisions of Section 17(a).

For the Commission, by the Division of Investment Management, pursuant to delegated authority.

Florence E. Harmon,

Acting Secretary.

[FR Doc. E8–31088 Filed 12–30–08; 8:45 am]

BILLING CODE 8011–01–P

SECURITIES AND EXCHANGE COMMISSION

[Release No. 34–59154; File No. SR–BSE–2008–48]

Self-Regulatory Organizations; Boston Stock Exchange, Incorporated; Order Approving a Proposed Rule Change, as Modified by Amendment Nos. 1 and 2, To Establish New Rules for Membership, Member Conduct, and the Listing and Trading of Cash Equity Securities; Order Granting an Exemption for the Boston Stock Exchange, Incorporated From Section 11A(b) of the Securities Exchange Act of 1934

December 23, 2008.

I. Introduction

On November 3, 2008, the Boston Stock Exchange (''BSE'' or ''Exchange''), filed with the Securities and Exchange Commission (''Commission''), pursuant to Section 19(b)(1) of the Securities Exchange Act of 1934 (''Act''),[1] and Rule 19b–4 thereunder,[2] a proposed rule change to: (i) Adopt new rules governing membership, the regulatory obligations of members, listing, and equity trading (''Equity Rules''); (ii) amend its certificate of incorporation (''Certificate'') and by-laws (''By-laws'') to reflect the proposed change in the name of the Exchange to NASDAQ OMX BX, Inc; (iii) amend and restate the Operating Agreement of BSX Group LLC (''Operating Agreement''), which will operate the Exchange's cash equities trading business, and which will be renamed NASDAQ OMX BX Equities LLC (''BX Equities LLC''); and (iv) to adopt a Delegation Agreement (''Delegation Agreement'') between the Exchange and BX Equities LLC (formerly, BSX Group LLC). The proposed rule change was published for comment in the **Federal Register** on November 19, 2008.[3] On November 12, 2008, the Exchange filed Amendment No. 1 to the proposed rule change.[4] On December 23, 2008, the Exchange filed Amendment No. 2 to the proposed rule change.[5] Because Amendment Nos. 1 and 2 make technical modifications to the original rule proposal, the Commission is not publishing them for comment. The Commission received no comment letters regarding the proposed rule change. This order approves the proposed rule change, as modified by Amendment Nos. 1 and 2.

On December 23, 2008, the Exchange requested that the Commission grant BX Equities LLC a permanent exemption from the requirement under Section 11A(b) of the Act, and Rule 609 thereunder, that a securities information processor (''SIP'') acting as an exclusive processor register with the Commission.[6] This order grants the requested exemption.

II. Background

On August 7, 2008, the Commission approved, along with related proposals, a BSE proposed rule change relating to governing documents and certain rules of the Exchange to accommodate the acquisition of the Exchange by The NASDAQ OMX Group, Inc. (''NASDAQ OMX''), the parent corporation of Nasdaq.[7] Among other things, the BSE Approval Order: (i) Amended and restated BSE's Certificate to reflect the Exchange's status as a wholly owned subsidiary of NASDAQ OMX; (ii) established new By-laws that are similar to the by-laws of Nasdaq; (iii) amended the Operating Agreement of BSX Group LLC, the entity that operated the Exchange's cash equities trading business prior to the Exchange's acquisition by NASDAQ OMX;[8] (iv) prohibited an Exchange member or its associated persons from beneficially owning more than 20% of the outstanding voting securities of NASDAQ OMX; and (v) limited the circumstances under which the Exchange may be affiliated with a member, and approved the affiliation

[1] 15 U.S.C. 78s(b)(1).

[2] 17 CFR 240.19b–4.

[3] *See* Securities Exchange Act Release No. 58927 (November 10, 2008), 73 FR 69685 (''Notice'').

[4] Amendment No. 1 states that the Board of Directors of the Exchange and the Board of Directors of BSX Group LLC have completed all action required to be taken in connection with the proposed rule change.

[5] Amendment No. 2 clarifies that: (1) Confidential information pertaining to the self-regulatory function of the Exchange or any market responsibility delegated by the Exchange to BX Equities LLC that comes into the possession of BX Equities LLC shall not be used for any non-regulatory purposes; and (2) the proposal to accept orders routed by Nasdaq Execution Services, LLC (''NES'') to the Exchange on a one-year pilot basis is made by the Exchange, rather than by The NASDAQ Stock Market, LLC (''Nasdaq'').

[6] *See* letter from John Zecca, Chief Regulatory Officer, Exchange, to Dr. Erik Sirri, Director, Division of Trading and Markets, Commission, dated December 23, 2008 (''SIP Exemption Request Letter''). *See also* 15 U.S.C. 78k–1(b). Rule 609 under the Act, 17 CFR 242.609, requires that the registration of a securities information processor be on Form SIP, 17 CFR 249.1001.

[7] *See* Securities Exchange Act Release No. 58324, 73 FR 46936 (August 12, 2008) (SR–BSE–2008–02; SR–BSE–2008–23; SR–BSE–2008–25; SR–BSECC–2008–01) (''BSE Approval Order'').

[8] BSX Group LLC was formed in 2004 as a joint venture between BSE and several investors to operate an electronic trading facility, the Boston Equities Exchange (''BeX''), for the trading of cash equity securities. BeX ceased its operations in September 2007. *See* Securities Exchange Act Release No. 57757 (May 1, 2008), 73 FR 26159.

between the Exchange and certain broker-dealer subsidiaries of NASDAQ OMX that would become members of the Exchange.

On August 29, 2008, the Exchange was acquired by NASDAQ OMX. At the time of this acquisition, the Exchange was not operating a venue for trading cash equities. The Exchange is now proposing to adopt a new rulebook with rules governing membership, the regulatory obligations of members, listing, and equity trading. The proposed new Equity Rules are based to a substantial extent on the rules of Nasdaq. As is the case with Nasdaq, administration and enforcement of many of the rules will be supported by the Financial Industry Regulatory Authority, Inc. (''FINRA'') through a regulatory services agreement (''Regulatory Contract''). Other rules, such as listing rules, will be administered by personnel who will be dually employed by the Exchange and Nasdaq, or solely by the Exchange.

The Exchange's existing rules are divided between the rules currently denominated as the ''Rules of the Board of Governors'' and the ''Rules of the Boston Options Exchange Group LLC'' (''BOX Rules''). Certain of the Rules of the Board of Governors that are cross-referenced in the BOX Rules (''Grandfathered Rules'') will continue to apply to trading on the Exchange's Boston Options Exchange facility (''BOX''). The Grandfathered Rules and the BOX Rules collectively constitute the ''Options Rules.'' The Options Rules, together with the new Equity Rules will constitute the ''Rules of the Exchange.'' Unless an Exchange member is also an ''Options Participant,'' however, it will be subject only to the Equity Rules.[9]

III. Discussion and Commission Findings

After careful review of the rule proposal, the Commission finds that the rule proposal is consistent with the requirements of the Act and the rules and regulations thereunder applicable to a national securities exchange.[10] Specifically, the Commission finds that the proposed rule change is consistent with Section 6(b)(1) of the Act,[11] which requires, among other things, that a national securities exchange be so organized and have the capacity to carry out the purposes of the Act, and to comply and enforce compliance by its members and persons associated with its members, with the provisions of the Act, the rules and regulations thereunder, and Section 6(b)(2) of the Act,[12] which requires that a national securities exchange have rules that provide that any registered broker or dealer or natural person associated with a registered broker or dealer may become a member, and any person may become associated with a member thereof. Further, the Commission finds that the rule proposal is consistent with Section 6(b)(5) of the Act,[13] which requires, among other things, that the rules of a national securities exchange be designed to prevent fraudulent and manipulative acts and practices; to promote just and equitable principles of trade; to foster cooperation and coordination with persons engaged in regulating, clearing, settling, and processing information with respect to, and facilitating transactions in securities; to remove impediments to and perfect the mechanism of a free and open market and a national market system; and, in general, to protect investors and the public interest. Section 6(b)(5) also requires that the rules of an exchange not be designed to permit unfair discrimination among customers, issuers, brokers, or dealers. In addition, the Commission finds that the proposed rule change is consistent with Section 6(b)(6) [14] and Section 6(b)(7) of the Act,[15] which require, in part, that the rules of an exchange provide a fair procedure for disciplining members and persons associated with members.

Overall, the Commission believes that approving the Exchange's proposed rule change could confer important benefits on the public and market participants. Approval of the proposal would establish the Equity Rules for the operation of an electronic facility for the trading of cash equity securities.[16] In particular, the entry into the marketplace of a new trading facility would provide market participants with an additional venue for executing orders in cash equity securities, which could enhance innovation and increase competition between and among the equities exchanges, resulting in better prices and executions for investors.

The discussion below does not review every detail of the proposed rule change, but rather focuses on the most significant rules and policy issues considered in review of the proposals.

A. Corporate Structure

In the BSE Approval Order, the Commission approved a change in control of BSX Group LLC, the entity that operated BeX as a facility of BSE prior to the Exchange's acquisition by NASDAQ OMX. The Exchange now proposes to change the name of BSX Group LLC to BX Equities LLC and amend the Operating Agreement. The amended Operating Agreement would establish that BX Equities LLC will operate the NASDAQ OMX BX Equities Market (''BX Equities Market'') as a cash equities trading facility, as that term is defined in Section 3(a)(2) of the Act,[17] of the Exchange. In addition, the Exchange and BX Equities LLC will enter into a Delegation Agreement, pursuant to which the Exchange will delegate to BX Equities LLC certain limited responsibilities and obligations with respect to the operation of the BX Equities Market as a facility of the Exchange.[18]

1. Ownership and Management of BX Equities LLC

The Operating Agreement will reflect that BX Equities LLC is a closely held subsidiary of the Exchange, whose only owners and members are the Exchange and the Exchange's parent corporation, NASDAQ OMX.[19] Although NASDAQ OMX will maintain a 46.79% ownership interest in BX Equities LLC and the Exchange will maintain a 53.21% ownership interest, the Operating Agreement provides that management of BX Equities LLC will be vested solely in Exchange.[20] The Exchange will be

[9] At present, a broker-dealer that is authorized for trading on BOX (an ''Options Participant'') is not required to become a member of the Exchange, but is nevertheless subject to the Options Rules as if it were a member. Under the revised Rules of the Exchange, this principle will continue to apply. Thus, the Equity Rules will apply to members, which will be authorized to engage in equity trading on the Exchange, and the Options Rules will apply to Options Participants, which will be authorized to engage in options trading. If a member opts to become an Options Participant (or vice versa), it will be subject to both sets of rules. Members must comply with the application requirements of the Option Rules in order to become Options Participants, and conversely, Options Participants must comply with the membership application procedures of the Equity Rules in order to become members and engage in equity trading. *See* Equity Rules 1013 and 1014; Chapter II of the BOX Rules.

[10] In approving this proposed rule change, the Commission has considered the proposed rule's impact on efficiency, competition and capital formation. 15 U.S.C. 78c(f).

[11] 15 U.S.C. 78f(b)(1).

[12] 15 U.S.C. 78f(b)(2).

[13] 15 U.S.C. 78f(b)(5).

[14] 15 U.S.C. 78f(b)(6).

[15] 15 U.S.C. 78f(b)(7).

[16] The Exchange previously operated an electronic trading facility, BeX, for the trading of cash equity securities. BeX ceased its operations in September 2007. *See supra* note 8.

[17] 15 U.S.C. 78(c)(2).

[18] The form of the Delegation Agreement is available at the Commission's Web site *http://www.sec.gov*.

[19] *See* Section 1.1, Operating Agreement.

[20] In the Notice, the Exchange represented that NASDAQ OMX would remain a member of BX Equities LLC to avoid certain adverse tax

Continued

designated as the sole manager of BX Equities LLC and will have the power to do any and all acts necessary, convenient or incidental to or for the furtherance of the purposes described in the Operating Agreement.[21] As a result, the Exchange will have control over substantially all of the activities of BX Equities LLC.[22]

The Commission believes that the proposal to have the managerial powers vested solely in the Exchange is designed to preserve the Exchange's regulatory authority over BX Equities LLC, and any facility for the trading of cash equity securities that BX Equities LLC operates, and is consistent with the Act because these provisions will grant the Exchange the ability to direct BX Equities LLC to perform any required, necessary, or appropriate act. In particular, the Commission believes that the ownership and management provisions of the Operating Agreement are consistent with Section 6(b)(1) of the Act,[23] which requires, among other things, that a national securities exchange be so organized and have the capacity to carry out the purposes of the Act, and to comply and enforce compliance by its members and persons associated with its members, with the provisions of the Act, the rules and regulations thereunder, and the rules of the exchange.

a. Transfers

The Commission notes that the amended Operating Agreement contains restrictions on the transfer of interests in BX Equities LLC that are designed to prevent any person from exercising undue control over the operation of the Exchange and to ensure that the Exchange and the Commission are able to carry out their regulatory obligations under the Act. Specifically, the amended Operating Agreement prohibits any person from transferring or assigning its interest in BX Equities LLC, unless such transfer is filed with and approved by the Commission.[24] In addition, the Operating Agreement currently contains a provision that requires any amendment to be submitted to the Exchange's Board of Directors (''Board'') for review, and, if such amendment is required to be filed, or filed with and approved by, the Commission before such amendment may be effective, then the amendment will not be effective until filed with, or filed with and approved by, the Commission.[25]

The Operating Agreement no longer will require the Exchange to provide the Commission with written notice ten days prior to the closing date of any acquisition that results in a BX Equities LLC member's percentage ownership interest in BX Equities LLC, alone or with any affiliate, meeting or exceeding the 5%, 10%, or 15% thresholds. Nor will it provide that any transfer of BX Equities LLC interests that result in the acquisition and holding by any person, alone or together with an affiliate, of an interest that meets or crosses the 20% threshold or any successive 5% threshold (*i.e.*, 25%, 30%, *etc.*) triggers the requirement to file an amendment with the Commission under Section 19(b) of the Act.[26] Further, the Operating Agreement no longer will require that any person that acquires a controlling interest (*i.e.*, an interest of 25% or greater) in a BX Equities LLC member that holds 20% or more of BX Equities LLC interests to become a party to the Operating Agreement.

Although proposed changes to provisions in the Operating Agreement on transfer eliminate some of the protections previously contained in the Operating Agreement, the Commission finds that because any transfer of BX Equities LLC interests must be filed with and approved by the Commission,[27] the elimination of the current notice and ownership restrictions in the Operating Agreement would not adversely affect the ability of the Exchange to carry out its self-regulatory responsibilities or the ability of the Commission to fulfill its responsibilities under the Act. The Commission finds that the proposed revisions to the Operating Agreement discussed above are consistent with the Act.

b. Confidentiality Provisions

The Operating Agreement provides that all confidential information pertaining to the self-regulatory function of the Exchange or the business of the Exchange related to the trading of U.S. equities (including disciplinary matters, trading data, trading practices and audit information) in the books and records of BX Equities LLC may not be made available to any persons.[28] The rule proposal will allow such information to be made available to officers, employees and agents of BX Equities LLC who have a reasonable need to know the contents thereof. However, such confidential information shall be required to be retained in confidence by BX Equities LLC and its officers, employees and agents and shall not be used for any non-regulatory purposes.[29] The Commission believes that the revised confidentiality provisions would not impair the Exchange's self-regulatory obligations with respect to BX Equities LLC and finds that this provision is consistent with the Act.

2. Status of the BX Equities Market as a Facility of BX and Delegation of Authority to BX Equities LLC

As a facility of the Exchange, the BX Equities Market will be subject to the Commission's oversight and examination. Consequently, the Commission will have the same authority to oversee the premises, personnel, and records of BX Equities LLC as it currently has with respect to the Exchange. In addition, the Exchange will be fully responsible for all activity that takes place through the BX Equities Market, and BX Equities Market participants will be subject to the Exchange's rules applicable to the BX Equities Market and to Exchange oversight.

As described in detail in the Notice, the Delegation Agreement provides that the Exchange will delegate to BX Equities LLC performance of certain limited responsibilities and obligations of the Exchange with respect to the operation of the BX Equities Market as a cash equities trading facility.[30] The Exchange, however, expressly retains ultimate responsibility for the fulfillment of its statutory and self-regulatory obligations under the Act. Accordingly, as described more fully below, the Exchange will retain ultimate responsibility for such delegated responsibilities and functions, and any actions taken pursuant to delegated authority will remain subject to review, approval or rejections by the Exchange's Board in accordance with procedures established by the Board. The Delegation Agreement will be a part of the Exchange's rules.

consequences that would be associated with contributing its ownership interest to the Exchange. *See* Notice, *supra* note 3, 73 FR at 69691.

[21] *See* Section 4.1, Operating Agreement.

[22] NASDAQ OMX approval would be required for: (i) Converting loans made by a Member to BX Equities LLC into an increase in such Member's Capital Contribution; (ii) an election to dissolve BX Equities LLC; and (iii) any amendment to the Operating Agreement. *See* Sections 7.4, 11.1 and 18, respectively, Operating Agreement.

[23] 15 U.S.C. 78f(b)(1).

[24] *See* Section 8.1, Operating Agreement.

[25] *See* Section 18.1, Operating Agreement.

[26] 15 U.S.C. 78f(b).

[27] *See id.*

[28] *See* Article 16, Operating Agreement. The Exchange also proposes that the provision would not be interpreted to limit or impede the ability of any officers, directors, employees or agents of BX Equities LLC to disclose confidential information to the Commission or the Exchange.

[29] *See id.*

[30] *See* Notice, *supra* note 3, 73 FR at 69691.

Pursuant to the Delegation Agreement, the Exchange expressly will retain the authority to: (1) Delegate authority to BX Equities LLC to take actions on behalf of the Exchange; and (2) direct BX Equities LLC to take action necessary to effectuate the purposes and functions of the Exchange, consistent with the independence of the Exchange's regulatory functions, exchange rules, policies and procedures, and the federal securities laws.[31] BX Equities LLC will have delegated authority to, among other things, operate the BX Equities Market, and establish and assess access fees, transaction fees, market data fees and other fees for the products and services offered by BX Equities LLC.[32] In addition, BX Equities LLC will have the authority to act as a SIP for quotations and transaction information related to securities traded on the BX Equities Market and any trading facilities operated by BX Equities LLC.[33]

BX Equities LLC will also have authority to develop, adopt, and administer rules governing participation in the BX Equities Market,[34] but the Exchange represents that it will have ultimate responsibility for the operations, rules and regulations developed by BX Equities LLC, as well as their enforcement.[35] Further, the Exchange represents that actions taken by BX Equities LLC pursuant to its delegated authority will remain subject to review, approval or rejection by the Exchange's Board.[36] In addition, BX Equities LLC will be responsible for referring to the Exchange any complaints of a regulatory nature involving potential rule violations by member organizations or employees,[37] and the Exchange will retain overall responsibility for ensuring that the statutory and self-regulatory functions of the Exchange are fulfilled.[38]

The Commission finds that it is consistent with the Act for the Exchange to delegate the operation of the BX Equities Market to BX Equities LLC, while retaining ultimate responsibility for statutory and self-regulatory obligations and ensuring that BX Equities Market business is conducted in a manner consistent with the requirements of the Act.

B. Proposed Equity Rules

The proposed new Equity Rules are based to a substantial extent on the rules of Nasdaq.[39] In the Notice, the Exchange highlighted the differences between the proposed new Equity Rules and Nasdaq rules.

1. Membership, Registration and Qualifications

The Exchange proposes that the criteria for membership in the Exchange be substantially the same as the criteria currently applicable to firms applying for membership in Nasdaq. As indicated in the Notice, the Equity Rules 1000 series governs membership, registration and qualification and is substantively identical to the corresponding rules for Nasdaq, with a few exceptions to account for the BX Equities Market's structure.[40]

Like Nasdaq rules, the Equity Rules will require a broker-dealer to be a member at all times of at least one other self-regulatory organization (''SRO'') before applying for membership in the Exchange.[41] The Equity Rules provide that a registered broker-dealer that was a member organization in good standing of the Exchange on the date immediately prior to the acquisition of the Exchange by NASDAQ OMX is eligible for continued membership if it continues to satisfy the membership requirements of the Equity Rule 1000 Series.[42] Continuing members are required to sign a revised membership agreement and maintain registrations of their associated persons, as required under the Equity Rules.[43] Associated persons already registered with the Exchange likewise will be eligible for continued registration if they satisfy the requirements under the Equity Rules.[44] Unlike members in the Exchange prior to the Exchange's acquisition by NASDAQ OMX, members under the Equity Rules do not possess an ownership interest in the Exchange.

Several registration requirements and categories set forth in Nasdaq rules are not carried over to the BX Equities Market. Equity Rules 1022 and 1032 provide only for principal registration and representative registration categories, as these are the only types of pre-existing BSE membership categories that will be relevant to the future operation and market structure of the Exchange.[45] In addition, because the Equity Rules are modeled on Nasdaq and FINRA rules, approved Nasdaq and FINRA members and their associated persons may apply for membership and registration in a category of registration recognized by the Exchange through an expedited process by submitting a Short Form Membership Application and Agreement.[46]

The Commission finds that the membership rules contained in the Equity Rules are consistent with Section 6 of the Act,[47] specifically Section 6(b)(2) of the Act,[48] which requires that a national securities exchange have rules that provide that any registered broker or dealer or natural person associated with a registered broker or dealer may become a member and any person may become associated with a member thereof. The Commission notes that pursuant to Section 6(c) of the Act,[49] an exchange must deny membership to non-registered broker-dealers and registered broker-dealers that do not satisfy certain standards, such as financial responsibility or operational capacity. In addition, the Commission notes that the membership, registration and qualifications, and access requirements are substantially similar to rules of Nasdaq previously approved by the Commission.[50] The Commission further notes that, as a registered exchange, the Exchange must continue to determine independently if an applicant satisfies the standards set forth in the Act, regardless of whether an applicant is a member of another SRO.

2. Participation and Access

The rules governing access to and participation on the BX Equities Market

[31] *See* Notice, *supra* note 3, 73 FR at 69694 and Delegation Agreement, Section I.

[32] *See* Notice, *supra* note 3, 73 FR at 69694 and Delegation Agreement, Section II.A.

[33] *See* Delegation Agreement, Section II.A.3.

[34] *See* Delegation Agreement, Section II.A.7.

[35] *See* Notice, *supra* note 3, 73 FR at 69694.

[36] *See id.*

[37] *See* Delegation Agreement, Section II.A.8.

[38] *See* Delegation Agreement, Section I.1.

[39] *See* Notice, *supra* note 3, 73 FR at 69686. The Equity Rules also have the same rule numbers as the corresponding Nasdaq rules.

[40] *See* Notice, *supra* note 3, 73 FR at 69686.

[41] *See* Equity Rules 1002 and 1014(a)(3).

[42] *See* Equity Rule 1002(f).

[43] *Id.*

[44] *Id.*

[45] *See* Equity Rules 1022 and 1032.

[46] *See* Equity Rule 1013(a)(5)(C). The Exchange represents that the requirements for maintaining membership in the Exchange, including compliance with Exchange and Commission rules and submission to examinations, are the same for all members, regardless of the means by which they became members. Moreover, both waive-in members and continuing members are subject to review by FINRA to determine if any information available to FINRA about the member would present concerns regarding the member's standing under FINRA rules. If any such information were presented by FINRA, the Exchange would evaluate it in determining appropriate steps to take with regard to the member. *See* e-mail from John Yetter, Vice President and Deputy General Counsel, NASDAQ OMX, to Heidi Pilpel, Attorney-Advisor, Division of Trading and Markets, Commission, on December 23, 2008.

[47] 15 U.S.C. 78f(b).

[48] 15 U.S.C. 78f(b)(2).

[49] 15 U.S.C. 78f(c).

[50] *See* Securities Exchange Act Release No. 53128 (January 13, 2006), 71 FR 3550 (January 23, 2006) (order approving Nasdaq's application to register as a national securities exchange) (''Nasdaq Registration Approval Order'').

also are substantively identical to the corresponding rules of Nasdaq.[51] BX Equities Market participants may include Equities Market Makers, Equities ECNs and Order Entry Firms.[52] The Exchange also will provide authorized access for Sponsored Participants.[53] However, only Equities Market Makers, or participants acting in a market making capacity, will be permitted to submit quotes.[54] In addition, like Nasdaq market makers, Equities Market Makers will be obligated to submit firm, continuous, two-sided quotations, with a minimum quotation increment of $0.01.[55]

The Commission notes that the access and participation requirements in the Equity Rules are substantially similar to Nasdaq's access and participation requirements, and, accordingly, finds that they are consistent with the Act. In particular, the BX Equities Market system (''System'') is designed to match buying and selling interest of all Exchange participants. In addition, the Commission believes that the access and participation rules should help to ensure that Equities Market Makers perform their obligations in a manner that promotes just and equitable principles of trade.

3. BX Trading System and Regulation NMS Compliance

a. BX Trading System

The Exchange's System for trading cash equity securities will operate using technology and rules similar to Nasdaq. Accordingly, the BX Equities Market will feature an electronic central limit order book, with executions occurring in price/time priority (but with displayed orders receiving priority over non-displayed orders).[56] While the BX Equities Market and Nasdaq will operate similarly in most aspects, there will be certain differences between the two markets. In particular:

- The BX Equities Market will operate from 8 a.m. to 7 p.m. Eastern Time (rather than from 7 a.m. to 8 p.m.). Like Nasdaq, regular market hours will be from 9:30 a.m. to 4 p.m. (or 4:15 p.m. for any exchange-traded funds that may be so designated by the Exchange).[57]
- The BX Equities Market will not operate an opening cross, a closing cross, or a halt cross. It will begin to process all eligible quotes/orders at 8 a.m., adding in time priority all eligible orders in accordance with each order's defined characteristics. All trades executed prior to 9:30 a.m. will be automatically appended with the ''.T'' modifier. The official opening price for a security listed on the Exchange will be the price of the first trade executed at or after 9:30 a.m. and the official closing price will be the price of the last trade executed at or prior to 4 p.m.[58]
- Quoting market participants may instruct the Exchange to open their quotes at 9:25 a.m. at a price of $0.01 (bid) and $999,999 (offer) and a size of one round lot in order to provide a two-sided quotation. In all other cases, the quote of a participant will be at the price and size entered by the participant.[59]
- If trading of a security is halted under Equity Rule 4120, the security will be released for trading at a time announced to market participants by the Exchange.[60]
- The Exchange's quotation and trade reporting information is disseminated under the Consolidated Quotation Plan (''CQ Plan'') and Consolidated Tape Association Plan (''CTA Plan''), rather than the Nasdaq UTP Plan.[61]
- Nasdaq rules relating to passive market making under Rule 103 of Regulation M under the Act[62] are not included because that rule does not apply to any other exchange, even if it adopts a similar market structure.[63]
- Equity Rule 4620 provides that an Exchange market maker that terminates its registration in a security listed on the Exchange may not re-register as a market maker in that security for a period of twenty business days, with a one-day exclusion period for all other securities.[64]
- The Exchange will not support discretionary orders, orders with a ''market hours'' time-in-force designation (with the exception of ''market hours day'' orders), or orders with a ''system hours good till cancelled'' time-in-force designation.[65]
- The Exchange will not support an automatic quotation refresh functionality.[66] Thus, market makers will be required to maintain continuous two-sided quotations without the assistance of the functionality. In addition, the Exchange will not allow market participants to maintain quotes or orders on the book overnight; rather, all quotes and orders will be cancelled at the end of the trading day and must be re-entered, if market participants so desire, the following day.[67]

The Commission finds that the Exchange's execution priority rules and trading rules are consistent with Section 6(b)(5) of the Act, which requires, among other things, that the rules of a national securities exchange be designed to prevent fraudulent and manipulative acts and practices; to promote just and equitable principles of trade; to foster cooperation and coordination with persons engaged in regulating, clearing, settling, and processing information with respect to, and facilitating transactions in securities; to remove impediments to and perfect the mechanism of a free and open market and a national market system; and, in general, to protect investors and the public interest.[68] Section 6(b)(5) also requires that the rules of an exchange not be designed to permit unfair discrimination among customers, issuers, brokers, or dealers. The Exchange market model for the trading of cash equity securities is similar to Nasdaq's equity market model and does not raise novel issues.

b. Regulation NMS

The Exchange has designed its rules relating to orders, modifiers, and order execution to comply with requirements of Regulation NMS. Unlike Nasdaq, the Exchange will not route orders in equity securities to other market centers. The Equity Rules are consistent with Regulation NMS[69] by requiring that all orders be processed in a manner that avoids trading through protected quotations and avoids locked and crossed markets.[70] Specifically, Equity Rule 4755 provides that in addition to such other designations as may be chosen by a market participant,[71] all orders that are not entered with a time in force of ''System Hours Immediate or Cancel''[72] must be designated as an

[51] *See, e.g.*, Equity Rules 4610 *et seq.*

[52] *See* Equity Rule 4611.

[53] *See* Securities Exchange Act Release Nos. 55061 (January 8, 2007), 72 FR 2052 (January 17, 2007) (notice of filing and immediate effectiveness of File No. SR–Nasdaq–2006–061) (adopting Nasdaq Rule 4611(d)); and 55550 (March 28, 2007), 72 FR 12 16389 (April 4, 2007) (notice of filing and immediate effectiveness of File No. SR–Nasdaq–2007–010) (revising Nasdaq Rule 4211(d)).

[54] *See* Equity Rule 4612.

[55] *See* Equity Rule 4613.

[56] *See* Notice, *supra* note 3, 73 FR at 69688.

[57] *See* Equity Rule 4617.

[58] *See* Notice, *supra* note 3, 73 FR at 69688.

[59] *See* Equity Rule 5752.

[60] *See* Equity Rule 4120.

[61] *See* Notice, *supra* note 3, 73 FR at 69688.

[62] 17 CFR 242.103.

[63] *See id.*

[64] *See* Equity Rule 4620.

[65] *See* Notice, *supra* note 3, 73 FR at 69688.

[66] *See id.*

[67] *See id.*

[68] 15 U.S.C. 78f(b)(5).

[69] 17 CFR 242.611.

[70] *See* Equity Rule 4755(b).

[71] As is the case with Nasdaq, different order designations can be combined. Thus, for example, a Price to Comply Order could be entered with reserve size or as a non-displayed order.

[72] A ''System Hours Immediate or Cancel'' order is an immediate or cancel order that may be entered between 8 a.m. and 7 p.m. Eastern Time, the hours of operation of the BX Equities Market. If a System Hours Immediate or Cancel order (or a portion thereof) is not marketable, the order (or unexecuted

Intermarket Sweep Order, a Pegged Order, a Price to Comply Order, or a Price to Comply Post Order.[73]

As described in the Notice, a System Hours Immediate or Cancel Order is compliant with Regulation NMS because by its terms it would not execute or post at a price that would result in a trade-through of a protected quotation or lock or cross another market.[74] A Pegged Order similarly is compliant with Regulation NMS because it continually re-prices to avoid locking or crossing.[75]

The Equity Rules also permit BX Equities Market participants to submit Intermarket Sweep Orders to comply with Regulation NMS, which will allow orders so designated to be automatically matched and executed within the System.[76] As described in the Notice, when a market participant enters an Intermarket Sweep Order it is representing that it is also simultaneously routing one or more additional limit orders (also marked as Intermarket Sweep Orders), as necessary, to execute against the full displayed size of any protected bid or offer (as defined in Rule 600(b) of Regulation NMS) in the case of a limit order to sell or buy with a price that is superior to the limit price of the order identified as an Intermarket Sweep Order.[77]

Both a Price to Comply and a Price Comply Post Order are designed to comply with the Regulation NMS.[78] Specifically, if at the time of entry, a Price to Comply Order will lock or cross the quotation of an external market, the order will be priced to the current low offer (for bids) or to the current best bid (for offers) but displayed at a price one minimum price increment lower than the offer (for bids) or higher than the bid (for offers).[79] Thus, an incoming order priced to execute against the displayed price will receive the superior undisplayed price.[80] If, at the time of entry, a Price to Comply Post Order will lock or cross the protected quote of an external market or will cause a violation of Rule 611 of Regulation NMS, the order will be re-priced and displayed to one minimum price increment (*i.e.*, $0.01 or $0.0001) below the current low offer (for bids) or to one penny above the current best bid (for offers).[81]

The Commission believes that by requiring all orders to be entered with one of the designations described above, all Exchange orders should either be priced or cancelled in a manner consistent with the avoidance of trade-throughs and locked and crossed markets. The Commission also notes that, because the Exchange will not route orders to other market centers, the Exchange's Regulation NMS policies and procedures under Rule 611(a) will rely on information provided by Nasdaq for purposes of determining whether another trading center is experiencing a failure, material delay, or malfunction of its systems or equipment within the meaning of Rule 611(b)(1).

The Commission finds that the rules relating to orders, modifiers, and order execution that are designed to comply with Regulation NMS are consistent with Section 6(b)(5) of the Act, which requires among other things, that the rules of a national securities exchange be designed to prevent fraudulent and manipulative acts and practices; to promote just and equitable principles of trade; to foster cooperation and coordination with persons engaged in regulating, clearing, settling, and processing information with respect to, and facilitating transactions in securities; to remove impediments to and perfect the mechanism of a free and open market and a national market system; and, in general, to protect investors and the public interest.

4. Section 11 of the Act

Section 11(a)(1) of the Act[82] prohibits a member of a national securities exchange from effecting transactions on that exchange for its own account, the account of an associated person, or an account over which it or its associated person exercises discretion (collectively, ''covered accounts''), unless an exception applies. Rule 11a2–2(T) under the Act,[83] known as the ''effect versus execute'' rule, provides exchange members with an exemption from the Section 11(a)(1) prohibition. Rule 11a2–2(T) permits an exchange member, subject to certain conditions, to effect transactions for covered accounts by arranging for an unaffiliated member to execute the transactions on the exchange. To comply with Rule 11a2–2(T)'s conditions, a member: (i) Must transmit the order from off the exchange floor; (ii) may not participate in the execution of the transaction once it has been transmitted to the member performing the execution;[84] (iii) may not be affiliated with the executing member; and (iv) with respect to an account over which the member has investment discretion, neither the member nor its associated person may retain any compensation in connection with effecting the transaction except as provided in the Rule.

In a letter to the Commission,[85] the Exchange requested that the Commission concur with its conclusion that Exchange members that enter orders into the System satisfy the requirements of Rule 11a2–2(T). For the reasons set forth below, the Commission believes that Exchange members entering orders into the System would satisfy the conditions of the Rule.

The Rule's first condition is that orders for covered accounts be transmitted from off the exchange floor. The System receives orders electronically through remote terminals or computer-to-computer interfaces. In the context of other automated trading systems, the Commission has found that the off-floor transmission requirement is met if a covered account order is transmitted from a remote location directly to an exchange's floor by electronic means.[86] Since the System

portion thereof) is canceled and returned to the entering participant. *See* Equity Rule 4751(h)(1).

[73] *See* Equity Rule 4755(a)(2).

[74] *See* Notice, *supra* note 3, 73 FR at 69688; Equity Rule 4751(h)(1).

[75] *See* Equity Rule 4751(f).

[76] *See* Equity Rules 4751(f)(6) and 4757.

[77] The Exchange represented that members will be responsible for ensuring that their use of Intermarket Sweep Orders complies with Regulation NMS, and the Exchange's T+1 surveillance program will monitor members' use of Intermarket Sweep Orders. *See* Notice, *supra* note 3, 73 FR at 69688.

[78] *See* Notice, *supra* note 3, 73 FR at 69688–69689.

[79] *See* Rule 4751(f)(7).

[80] For example, if the national best bid and best offer is $9.97 × $10.00, and a participant enters a Price to Comply Order to buy 10,000 shares at $10.01, the order will display at $9.99, but will reside on the System book at $10.00. If a seller then enters an order at $9.99, it will execute at $10.00, up to the full 10,000 shares of the order. The displayed and undisplayed prices of a Price to Comply Order may be adjusted once or multiple times depending upon the method of order entry and changes to the prevailing national best bid/best offer.

[81] *See* Equity Rule 4751(f)(8). For example, if the national best bid and best offer is $9.97 × $10.00, and a participant enters a Price to Comply Post Order to buy at $10.01, the order will be repriced and displayed at $9.99. If a seller enters an order at $9.99, it will execute at that price.

[82] 15 U.S.C. 78k(a)(1).

[83] 17 CFR 240.11a2–2(T).

[84] The member may, however, participate in clearing and settling the transaction.

[85] *See* letter from John Zecca, Chief Regulatory Officer, Exchange, to Florence Harmon, Acting Secretary, Commission, dated December 23, 2008 (''BSE 11(a) Request Letter'').

[86] *See, e.g.*, Nasdaq Registration Approval Order, *supra* note 50 Securities Exchange Act Release Nos. 49068 (January 13, 2004), 69 FR 2775 (January 20, 2004) (order approving the Boston Options Exchange as an options trading facility of the Boston Stock Exchange); 44983 (October 25, 2001), 66 FR 55225 (November 1, 2001) (order approving Archipelago Exchange as electronic trading facility of the Pacific Exchange (''PCX'')); 29237 (May 24, 1991), 56 FR 24853 (May 31, 1991) (regarding NYSE's Off-Hours Trading Facility); 15533 (January 29, 1979), 44 FR 6084 (January 31, 1979) (regarding the American Stock Exchange (''Amex'') Post

Continued

receives orders electronically through remote terminals or computer-to-computer interfaces, the Commission believes that the System satisfies the off-floor transmission requirement.

Second, the rule requires that the member not participate in the execution of its order. The Exchange represented that at no time following the submission of an order is a member able to acquire control or influence over the result or timing of an order's execution.[87] According to the Exchange, the execution of a member's order is determined solely by what orders, bids, or offers are present in the System at the time the member submits the order and on the priority of those orders, bids and offers. Accordingly, the Commission believes that an Exchange member does not participate in the execution of an order submitted into the System.

Third, Rule 11a2–2(T) requires that the order be executed by an exchange member who is unaffiliated with the member initiating the order. The Commission has stated that the requirement is satisfied when automated exchange facilities, such as the System, are used, as long as the design of these systems ensures that members do not possess any special or unique trading advantages in handling their orders after transmitting them to the Exchange.[88] The Exchange has represented that the design of the System ensures that no member has any special or unique trading advantage in the handling of its orders after transmitting its orders to the Exchange.[89] Based on the Exchange's representation, the Commission believes that the System satisfies this requirement.

Fourth, in the case of a transaction effected for an account with respect to which the initiating member or an associated person thereof exercises investment discretion, neither the initiating member nor any associated person thereof may retain any compensation in connection with effecting the transaction, unless the person authorized to transact business for the account has expressly provided otherwise by written contract referring to Section 11(a) of the Act and Rule 11a2–2(T).[90] The Exchange represented that Exchange members trading for covered accounts over which they exercise investment discretion must comply with this condition in order to rely on the rule's exemption.[91]

C. Exception to Limitation on Affiliation Between BX and its Members

Although the Exchange will not route orders to other market centers, it proposes to receive orders routed to it by other market centers, including orders routed from Nasdaq.[92] BSE Rule Chapter XXXIX, Section 2 prohibits BSE members from being affiliated with BSE.[93] Proposed Equity Rule 2140(a) is identical to BSE Rule Chapter XXXIX, Section 2, and prohibits the Exchange or any entity with which it is affiliated, from acquiring or maintaining an ownership interest in a member without prior Commission approval.

NES is a broker-dealer that is a member of the Exchange, and currently provides to Nasdaq members optional routing services to other market centers. NES is owned by NASDAQ OMX, which also owns three registered securities exchanges—Nasdaq, the Exchange, and Phlx.[94] Thus, NES is an affiliate of each of these exchanges. Absent Commission approval, Equity Rule 2140(a) would prohibit NES from being a member of the Exchange.

In connection with NASDAQ OMX's acquisition of the Exchange, the Commission approved the current affiliation between the Exchange and NES for the limited purpose of permitting NES to provide routing services for Nasdaq for orders that first attempt to access liquidity on Nasdaq's system before routing to the Exchange, subject to certain other limitations and conditions.[95] At the time of NASDAQ OMX's acquisition of the Exchange, the Exchange was not trading equity securities.[96] Now, in connection with the Exchange's resumption of equity trading pursuant to the instant proposed rule change, the Exchange proposes to modify the conditions for the affiliation between NES and the Exchange, previously approved by the Commission, to permit the Exchange to receive orders routed by NES in its capacity as a facility of Nasdaq (including ''Directed Orders''),[97] on a one-year pilot basis.[98]

NES operates as a facility of Nasdaq that provides outbound routing from Nasdaq to other market centers, subject to certain conditions.[99] NES's operation as a facility providing outbound routing services for Nasdaq is subject to the conditions that: (1) NES is operated and regulated as a facility of Nasdaq; (2) NES only provides outbound routing services unless otherwise approved by the

Execution Reporting System, the Amex Switching System, the Intermarket Trading System, the Multiple Dealer Trading Facility of the Cincinnati Stock Exchange, the PCX Communications and Execution System, and the Philadelphia Stock Exchange (''Phlx'') Automated Communications and Execution System (''1979 Release'')); and 14563 (March 14, 1978), 43 FR 11542 (March 17, 1978) (regarding the NYSE's Designated Order Turnaround System (''1978 Release'')).

[87] *See* BSE 11(a) Request Letter, *supra* note 85. The member may only cancel or modify the order, or modify the instructions for executing the order, but only from off the Exchange floor. The Commission has stated that the non-participation requirement is satisfied under such circumstances so long as such modifications or cancellations are also transmitted from off the floor. *See* Securities Exchange Act Release No. 14563 (March 14, 1978), 43 FR 11542 (March 17, 1978) (stating that the ''non-participation requirement does not prevent initiating members from canceling or modifying orders (or the instructions pursuant to which the initiating member wishes orders to be executed) after the orders have been transmitted to the executing member, provided that any such instructions are also transmitted from off the floor'').

[88] In considering the operation of automated execution systems operated by an exchange, the Commission noted that while there is no independent executing exchange member, the execution of an order is automatic once it has been transmitted into the systems. Because the design of these systems ensures that members do not possess any special or unique trading advantages in handling their orders after transmitting them to the exchange, the Commission has stated that executions obtained through these systems satisfy the independent execution requirement of Rule 11a2–2(T). *See* 1979 Release, *supra* note 86.

[89] *See* BSE 11(a) Request Letter, *supra* note 85.

[90] 17 CFR 240.11a2–2(T)(a)(2)(iv). In addition, Rule 11a2–2(T)(d) requires a member or associated person authorized by written contract to retain compensation, in connection with effecting transactions for covered accounts over which such member or associated person thereof exercises investment discretion, to furnish at least annually to the person authorized to transact business for the account a statement setting forth the total amount of compensation retained by the member in connection with effecting transactions for the account during the period covered by the statement. *See* 17 CFR 240.11a2–2(T)(d). *See also* 1978 Release, *supra* note 86 (stating ''[t]he contractual and disclosure requirements are designed to assure that accounts electing to permit transaction-related compensation do so only after deciding that such arrangements are suitable to their interests'').

[91] *See* BSE 11(a) Request Letter, *supra* note 85.

[92] *See* Notice, *supra* note 3, 73 FR at 69689.

[93] *See* BSE Approval Order, *supra* note 7, 73 FR at 46943–49644. The Exchange proposed, and the Commission approved, that the affiliation also be subject to the following conditions and limitations: (1) NES is operated as a facility of Nasdaq; (2) for purposes of Commission Rule 17d–1 under the Act, 17 CFR 240.17d–1, the designated examining authority of NES is a self-regulatory organization unaffiliated with Nasdaq; and (3) use of NES to route orders to other market centers is optional. *Id.*

[94] *See* BSE Approval Order, *supra* note 7, 73 FR at 46943. *See* also Securities Exchange Act Release No. 58179 (July 17, 2008), 73 FR 42874 (July 23, 2008) (order approving NASDAQ OMX's acquisition of Phlx.)

[95] BSE Rule Chapter XXXIX, Section 2 was adopted in the BSE Approval Order (*see supra* note 7, 73 FR at 46944), and is proposed to be replaced by Equity Rule 2140(a).

[96] *See* BSE Approval Order, *supra* note 7, 73 FR at 49644, n.117.

[97] Nasdaq Rule 4751(f)(9) defines Directed Orders as immediate-or-cancel orders that are directed to an exchange other than Nasdaq without checking the Nasdaq book. Pursuant to Nasdaq Rule 4751(f)(9), Nasdaq currently may not route Directed Orders to a facility of an exchange that is an affiliate of Nasdaq.

[98] *See* Notice, *supra* note 3, 73 FR at 69689.

[99] *See* Nasdaq Rules 4751 and 4758. *See also* Notice, *supra* note 3, 73 FR at 69689.

Commission; (3) the designated examining authority of NES is a self-regulatory organization unaffiliated with Nasdaq; and (4) the use of NES for outbound routing is available only to Nasdaq members and the use of NES remains optional. Currently, NES may not route Directed Orders to a facility of an exchange that is an affiliate of Nasdaq.[100] Nasdaq has proposed, and the Commission approved today, a rule change to permit NES to route all forms of orders, including Directed Orders, to the BX Equities Market.[101]

The operation of NES as a facility of Nasdaq providing outbound routing services from that exchange will be subject to Nasdaq oversight, as well as Commission oversight. Nasdaq will be responsible for ensuring that NES's outbound routing function is operated consistent with Section 6 of the Act and Nasdaq rules. In addition, Nasdaq must file with the Commission rule changes and fees relating to NES's outbound routing function.

Recognizing that the Commission has previously expressed concern regarding the potential for conflicts of interest in instances where a member firm is affiliated with an exchange of which it is a member, the Exchange previously proposed, and the Commission approved, limitations and conditions on NES's affiliation with the Exchange[102] Also recognizing that the Commission has expressed concern regarding the potential for conflicts of interest in instances where a member firm is affiliated with an exchange to which it is routing orders, the Exchange now proposes to revise the conditions to NES's affiliation with the Exchange to permit the Exchange to accept inbound orders that NES routes in its capacity as a facility of Nasdaq, subject to the following limitations and conditions:

- First, the Exchange states that the Exchange and FINRA will enter into a Regulatory Contract, as well as an agreement pursuant to Rule 17d–2 under the Act (''17d–2 Agreement'').[103] Pursuant to the Regulatory Contract and the 17d–2 Agreement, FINRA will be allocated regulatory responsibilities to review NES's compliance with certain Exchange rules.[104] Pursuant to the Regulatory Contract, however, BX retains ultimate responsibility for enforcing its rules with respect to NES.
- Second, FINRA will monitor NES for compliance with the Exchange's trading rules, and will collect and maintain certain related information.[105]
- Third, the Exchange states that FINRA has agreed with the Exchange that it will provide a report to the Exchange's chief regulatory officer (''CRO''), on a quarterly basis, that: (i) Quantifies all alerts (of which FINRA is aware) that identify NES as a participant that has potentially violated Commission or Exchange rules, and (ii) lists all investigations that identify NES as a participant that has potentially violated Commission or Exchange rules.[106]
- Fourth, the Exchange proposes Rule 2140(c), which will require NASDAQ OMX, as the holding company owning both the Exchange and NES, to establish and maintain procedures and internal controls reasonably designed to ensure that NES does not develop or implement changes to its system, based on non-public information obtained regarding planned changes to the Exchange's systems as a result of its affiliation with the Exchange, until such information is available generally to similarly situated Exchange members, in connection with the provision of inbound order routing to the Exchange.[107]
- Fifth, the Exchange proposes that routing of orders from NES to the Exchange, in NES's capacity as a facility of Nasdaq, be authorized for a pilot period of twelve months.[108]

In the past, the Commission has expressed concern that the affiliation of an exchange with one of its members raises potential conflicts of interest, and the potential for unfair competitive advantage.[109] Although the Commission continues to be concerned about potential unfair competition and conflicts of interest between an exchange's self-regulatory obligations and its commercial interest when the exchange is affiliated with one of its members, for the reasons discussed below, the Commission believes that it is consistent with the Act to permit NES to provide inbound routing to the Exchange on a pilot basis, subject to the conditions described above.

The Exchange has proposed five conditions applicable to NES's routing activities, which are enumerated above. The Commission believes that these conditions mitigate its concerns about potential conflicts of interest and unfair competitive advantage. In particular, the Commission believes that FINRA's oversight of NES,[110] combined with FINRA's monitoring of NES's compliance with the equity trading rules and quarterly reporting to the Exchange's CRO, will help to protect the independence of the Exchange's regulatory responsibilities with respect to NES. The Commission also believes that the proposed addition of Equity Rule 2140(c) is designed to ensure that NES cannot use any information advantage it may have because of its affiliation with the Exchange. Furthermore, the Commission believes that the Exchange's proposal to allow NES to route orders inbound to the Exchange from Nasdaq, on a pilot basis, will provide the Exchange and the Commission an opportunity to assess the impact of any conflicts of interest of allowing an affiliated member of the Exchange to route orders inbound to the Exchange and whether such affiliation provides an unfair competitive advantage.

D. Securities Traded on the Exchange

The Equity Rule 4000 series includes the rules governing listing and trading of cash equity securities on the Exchange. The Exchange proposes to adopt initial and continued listing standards for primary and secondary classes of common stock, preferred stock, convertible debt, rights and warrants, shares or certificates of beneficial interest of trusts, foreign securities, American Depositary

[100] *Id. See also supra* note 7.

[101] *See* Securities Exchange Act Release No. 59154 (December 23, 2008) (SR–Nasdaq–2008–091).

[102] *See* BSE Approval Order, *supra* note 7, 73 FR at 49644.

[103] 17 CFR 240.17d–2.

[104] The Exchange also states that NES is subject to independent oversight by FINRA, its Designated Examining Authority, for compliance with financial responsibility requirements. *See* Notice, *supra* note 3, 73 FR at 69689.

[105] Pursuant to the Regulatory Contract, both FINRA and the Exchange will collect and maintain all alerts, complaints, investigations and enforcement actions in which NES (in its capacity as a facility of Nasdaq routing orders to the Exchange) is identified as a participant that has potentially violated applicable Commission or Exchange rules. The Exchange and FINRA will retain these records in an easily accessible manner in order to facilitate any potential review conducted by the Commission's Office of Compliance Inspections and Examinations. *See* Notice, *supra* note 3, 73 FR at 69689.

[106] *See id.*

[107] *See* Equity Rule 2140(c). *See also* Notice, *supra* note 3, 73 FR at 69689–69690.

[108] *See* Amendment No. 2, *supra* note 5. In Amendment No. 2, the Exchange clarified that its proposal, as opposed to Nasdaq's corresponding proposal, be approved on a twelve-month pilot basis. *See also* Notice, *supra* note 3, 73 FR at 69689, n.15 and accompanying text.

[109] *See, e.g.*, Securities Exchange Act Release Nos. 54170 (July 18, 2006), 71 FR 42149 (July 25, 2006) (SR–NASDAQ–2006–006) (order approving Nasdaq's proposal to adopt Nasdaq Rule 2140, restricting affiliations between Nasdaq and its members); 53382 (February 27, 2006), 71 FR 11251 (March 6, 2006) (SR–NYSE–2005–77) (order approving the combination of the New York Stock Exchange, Inc. and Archipelago Holdings, Inc.); and 58673 (September 29, 2008), 73 FR 57707 (October 8, 2008) (SR–Amex–2008–62) (order approving the combination of NYSE Euronext and the American Stock Exchange LLC).

[110] This oversight will be accomplished through the 17d–2 Agreement between FINRA and the Exchange and the Regulatory Contract.

Receipts (''ADRs''), and limited partnership interests that are identical to Nasdaq's listing standards for the Nasdaq Capital Market, Nasdaq's most permissive listing standards.[111] The standards for initial and continued listing of these securities are set forth in the proposed Equity Rule 4300 Series.[112]

In addition, the Exchange proposes to adopt, in Equity Rules 4420 and 4450, initial and continued listing standards for Selected Equity-linked Debt Securities (''SEEDS''), units, index warrants, portfolio depository receipts, index fund shares, trust issued receipts, linked securities, managed fund shares, and ''other securities'' that would be substantively identical to those of the Nasdaq Global Market.[113] The listing standards for SEEDS and ''other securities'' would differ slightly from the comparable Nasdaq standards, in that they require issuers of securities listed thereunder to be eligible for listing on the Nasdaq or the New York Stock Exchange (''NYSE'') or to be affiliates of companies that are so eligible, rather than being required to be actually so listed. This difference recognizes the fact that an issuer seeking to list a SEED or ''other security'' on the Exchange would not necessarily also have a security listed on Nasdaq or the NYSE, but it would nevertheless be required to demonstrate ability to meet such other listing standards before listing the SEED or ''other security.'' The proposed equity rules do not include the provisions of Nasdaq Rules 4426 and 4427, which establish standards for Nasdaq's Global Select Market tier.[114] The Commission finds the Exchange's proposed initial and continued listing standards are consistent with the Act, including Section 6(b)(5), in that they are designed to protect investors and the public interest and to promote just and equitable principles of trade.[115]

E. Regulation of the Exchange and Its Members

As a facility of the Exchange, the BX Equities Market will be subject to the Exchange's SRO functions and the Exchange will have regulatory responsibility for the activities of the BX Equities Market. The Exchange represents that it has the ability to discharge all regulatory functions related to the facility that it has undertaken to perform by virtue of operating the BX Equities Market as a facility of the Exchange.[116] In addition, the amended Operating Agreement contains provisions relating to the governance of the BX Equities LLC that will ensure that the Exchange has authority over BX Equities LLC to fulfill the Exchange's responsibility for all regulatory functions related to the BX Equities Market. The Exchange represented that its proposed corporate and self-regulatory structure, along with the proposed structure of BX Equities LLC as a controlled subsidiary of the Exchange, are sufficient to ensure that BX Equities LLC and the BX Equities Market will be operated and regulated in a manner that is consistent with the Act.[117]

In connection with the proposed rule change, the Exchange noted that its Regulatory Oversight Committee and its CRO will assume responsibility for regulating quoting and trading on the BX Equities Market and conduct by its members.[118] The Exchange's CRO has general supervision of the regulatory operations of the Exchange, including overseeing surveillance, examination, and enforcement functions, and will administer the Regulatory Contract between the Exchange and FINRA.[119]

The Regulatory Contract between the Exchange and FINRA governs the Exchange and its facilities and therefore will automatically govern the BX Equities Market and Exchange members trading on it.[120] Notwithstanding the Regulatory Contract, the Exchange retains ultimate legal responsibility for the regulation of its members and its market. The Exchange's By-Laws and rules provide that it has disciplinary jurisdiction over its members so that it can enforce its members' compliance with its rules and the federal securities laws.[121] The Exchange's rules also permit it to sanction members for violations of its rules and violations of the federal securities laws by, among other things, expelling or suspending members, limiting members' activities, functions, or operations, fining or censuring members, or suspending or barring a person from being associated with a member.[122] The Exchange's rules also provide for the imposition of fines for minor rule violations in lieu of commencing disciplinary proceedings.[123]

The Exchange's Regulation Department will carry out many of the Exchange's regulatory functions, including administering its membership and disciplinary rules, and is functionally separate from the Exchange's business lines. The Exchange represents that the Regulation Department includes MarketWatch, which will perform real-time intraday surveillance over the Exchange's listed companies and participants in the BX Equities Market. More specifically, MarketWatch will oversee the complete and timely disclosure of issuers' material information to determine if a trading halt is necessary to maintain an

[111] Nasdaq has three progressively higher listing tiers—the Nasdaq Capital Market, the Nasdaq Global Market, and the Nasdaq Global Select Market. Securities listed on the Nasdaq Capital Market are ''covered securities'' for purposes of Section 18 of the Securities Act of 1933, 15 U.S.C. 77r (''Securities Act''), and are therefore exempt from state law registration requirements. *See* Securities Act Release No. 8791 (April 18, 2007), 72 FR 20410 (April 24, 2008) (File No. S7–18–06). In the Notice, the Exchange stated that it anticipates petitioning the Commission to amend Rule 146 under the Securities Act to recognize securities listed on the Exchange as covered securities. *See* Notice, *supra* note 3, 73 FR at 69688.

[112] *See* Equity Rules 4310 and 4320.

[113] *See* Equity Rules 4420 and 4450. The Exchange's proposed listing standards for units combine elements of the standards of the Nasdaq Capital Market and the Nasdaq Global Market, in that they require the equity component of a unit to satisfy standards equivalent to Nasdaq Capital Market standards but allow the inclusion of a debt component that is not itself eligible for listing but that meets the requirements of Equity Rule 4420(h)(1)(B).

[114] The Equity Rule 4600 series is being reserved for the Exchange's listing fees, which will be included in a separate filing.

[115] 15 U.S.C. 78f(b)(5). The Commission notes that the Exchange's initial and continued listing standards for primary and secondary classes of common stock, preferred stock, convertible debt, rights and warrants, shares or certificates of beneficial interest of trusts, foreign securities, ADRs and limited partnership interests are identical to the existing standards for the Nasdaq Capital Market, which the Commission previously approved. Likewise, the Exchange's initial and continued listing standards for units, index warrants, portfolio depository receipts, index fund shares, trust issued receipts, linked securities, managed fund shares and other securities are identical to those approved for the Nasdaq Global Market, which the Commission also previously approved. *See* Nasdaq Registration Approval Order, *supra* note 50.

[116] *See* Notice, *supra* note 3, 73 FR at 69691, and BSE Approval Order, *supra* note 7, 73 FR at 46944 for a description of the protections, limitations, and requirements the Commission previously approved in connection with the governing structure of NASDAQ OMX and of the Exchange, which are designed to protect the self-regulatory function of the Exchange and preserve its independence.

[117] *See* Notice, *supra* note 3, 73 FR at 69691.

[118] Each broker-dealer that participates in trading on the BX Equities Market must be a member of the Exchange. *See* Notice, *supra* note 3, 73 FR at 69693.

[119] Pursuant to the Regulatory Contract, FINRA will perform certain regulatory functions on behalf of the Exchange. In addition to performing certain membership functions for the Exchange, FINRA will perform certain disciplinary and enforcement functions for the Exchange. Generally, FINRA will investigate members, issue complaints, and conduct hearings pursuant to the Exchange's rules. Appeals of disciplinary hearings, however, will be handled by the Nasdaq Review Council. *See* Notice, *supra* note 3, 73 FR at 69690.

[120] *See id.* at 69692.

[121] *See, e.g.*, Exchange By-Laws, Article IX, Section 2.

[122] *See, e.g.*, Equity Rule 8310.

[123] *See, e.g.*, Equity Rule 9216(b).

orderly market for the release of material news. In addition, MarketWatch, through its automated detection system, will monitor the trading activity of each security and will generate a price and volume alert to aid in the assessment of unusual market activity. MarketWatch will also coordinate and execute the release of initial public offerings; administer market participants' excused withdrawal requests; and handle the clearly erroneous trade adjudication process. If MarketWatch observes any activity that may involve a violation of Commission or Exchange rules, MarketWatch will immediately refer the activity to FINRA's Market Regulation Department for further investigation and potential disciplinary action. The Equity Rules governing unusual market conditions, extraordinary market volatility, and audit trail are modeled on the rules of Nasdaq.[124] With regard to trading halts, if trading of a security is halted under Equity Rule 4120, the security will be released for trading at a time announced to market participants by the Exchange. Because the Exchange will not have a halt cross, provisions of Nasdaq 4120 relating to a ''display only'' period prior to the execution of the halt cross are not included.

The Commission finds that the Exchange's proposed rules relating to the regulation of the BX Equities Market and its members are consistent with the requirements of the Act, and in particular with Section 6(b)(1) of the Act, which requires an exchange to be so organized and have the capacity to be able to carry out the purposes of the Act and to comply, and to enforce compliance by its members and persons associated with its members, with the Act and the rules and regulations thereunder, and the rules of the Exchange,[125] and with Sections 6(b)(6) and 6(b)(7) of the Act,[126] which require an Exchange to provide fair procedures for the disciplining of members and persons associated with members.

1. Regulatory Contract

The Exchange represents that the Regulatory Contract between the Exchange and FINRA governs the Exchange and its facilities.[127] Therefore, because the BX Equities Market will be a facility of the Exchange, the Regulatory Contract will govern the BX Equities Market.[128] The Exchange and FINRA also are parties to an agreement pursuant to Section 17(d) of the Act and Rule 17d–2 thereunder. A regulatory matter involving an Exchange member that is also a FINRA member, and that is governed by both the Regulatory Contract and the 17d–2 Agreement will be administered by FINRA pursuant to the 17d–2 Agreement.

The Commission notes that the Exchange will continue to bear ultimate regulatory responsibility for functions performed on its behalf under the Regulatory Contract. Further, the Exchange retains ultimate legal responsibility for the regulation of its members and its market (including its facility, the BX Equities Market).

The Commission believes that it is consistent with the Act and the public interest to allow the Exchange to contract with FINRA to perform membership, disciplinary, and enforcement functions.[129] Membership, discipline, and enforcement are fundamental elements to a regulatory program, and constitute core self-regulatory functions. It is essential to the public interest and the protection of investors that these functions are carried out in an exemplary manner. With respect to certain regulatory functions contracted to FINRA by the Exchange, including membership, disciplinary and enforcement functions, the Commission previously noted its belief that FINRA has the expertise and experience to perform such functions on behalf of an exchange, and that the contracting of such functions to FINRA is consistent with the Act and the public interest.[130] The Commission continues to believe that this is true with respect to the inclusion in the Regulatory Contract of regulation of the Exchange and the conduct of its members.

The Exchange, unless relieved by the Commission of its responsibility,[131] shall bear the responsibility for self-regulatory conduct and primary liability for self-regulatory failures, not the SRO retained to perform regulatory functions on the Exchange's behalf.[132] In performing these functions, however, FINRA may nonetheless bear liability for causing or aiding and abetting the failure of the Exchange to perform its regulatory functions.[133] Accordingly, although FINRA will not act on its own behalf under its SRO responsibilities in carrying out these regulatory services for the Exchange relating to the operation of the BX Equities Market, FINRA also may have secondary liability if, for example, the Commission finds that the contracted functions are being performed so inadequately as to cause a violation of the federal securities laws by the Exchange.[134]

2. 17d–2 Agreement

Rule 17d–2 allows SROs to file with the Commission plans under which the SROs allocate among themselves the responsibility to receive regulatory reports from, and examine and enforce compliance with, specified provisions of the Act and rules thereunder and SRO rules by firms that are members of more than one SRO (''common members''). An SRO that is a party to an effective 17d–2 plan is relieved of regulatory responsibility as to any common member for whom responsibility is allocated under the plan to another SRO.[135] The Commission notes that the Exchange has entered into a 17d–2 Agreement with FINRA, covering common members of the Exchange and FINRA, and that the Exchange has filed this agreement with the Commission.[136] The

[124] *See, e.g.*, Equity Rules 4121, 4631, 6955.

[125] 15 U.S.C. 78f(b)(1).

[126] 15 U.S.C. 78f(b)(6) and (b)(7).

[127] *See* Notice, *supra* note 3, 73 FR at 69692.

[128] The Commission notes that the Equity Rules provide that: ''[The] Rules that refer to the Exchange's Regulation Department, Regulation Department staff, Exchange staff, and Exchange departments should be understood as also referring to FINRA staff and FINRA departments acting on behalf of the Exchange pursuant to the FINRA Regulatory Contract. *See* Equity Rule 0130.

[129] *See, e.g.*, Securities Exchange Act Release No. 40760 (December 8, 1998), 63 FR 70844 (December 22, 1998). *See also* Securities Exchange Act Release Nos. 57478 (March 12, 2008) 73 FR 14521, (March 18, 2008) (order approving rules governing the trading of options on the NASDAQ Options Market) (''NOM Approval Order''); 50122 (July 29, 2004), 69 FR 47962 (August 6, 2004) (order approving File No. SR–Amex–2004–32) (''Amex Approval Order''); 42455 (February 24, 2000), 65 FR 11388 (March 2, 2000) (File No. 10–127) (approving ISE's registration as a national securities exchange) (''ISE Exchange Registration Order'') at III(D)(2); Nasdaq Registration Approval Order, *supra* note 50.

[130] *See* Nasdaq Registration Approval Order, *supra* note 50, at notes 10 and 11 and accompanying text.

[131] *See* Section 17(d)(1) of the Act and Rule 17d–2 thereunder. 15 U.S.C. 78q(d)(1); and 17 CFR 240.17d–2. The Commission notes that it is not approving the Regulatory Contract.

[132] *See* NOM Approval Order, *supra* note 129; Nasdaq Registration Approval Order, supra note 50, at notes 112 and 113 and accompanying text; Amex Approval Order, *supra* note 129; and ISE Registration Approval Order, *supra* note 129, at Section III(D)(2).

[133] *Id.*

[134] *Id.*

[135] Rule 17d–2 provides that any two or more SROs may file with the Commission a plan for allocating among such SROs the responsibility to receive regulatory reports from persons who are members or participants of more than one of such SROs to examine such persons for compliance, or to enforce compliance by such persons, with specified provisions of the Act, the rules and regulations thereunder, and the rules of such SROs, or to carry out other specified regulatory functions with respect to such persons. 17 CFR 240.17d–2.

[136] *See* Securities Exchange Act Release No. 59101 (December 15, 2008) (File No. 4–575.)

proposed 17d–2 agreement allocates to FINRA regulatory responsibility, with respect to common members, as follows:

- FINRA will process and act upon all applications submitted on behalf of allied persons, partners, officers, registered personnel and any other person required to be approved by the rules of both the Exchange and FINRA or associated with common members thereof. Upon request, FINRA will advise the Exchange of any changes of allied members, partners, officers, registered personnel and other persons required to be approved by the rules of both the Exchange and FINRA.
- FINRA will investigate common members of the Exchange and FINRA for violations compliance with federal securities laws, rules and regulations, and rules of the Exchange that have been certified by BX as identical or substantially similar to a FINRA rule.
- FINRA will enforce compliance by common members with federal securities laws, rules and regulations, and rules of the Exchange that have been certified by the Exchange as identical or substantially similar to FINRA rules.

3. Minor Rule Violation Plan

The Commission approved the Exchange's Minor Rule Violation Plan (''MRVP'') in 1989.[137] The MRVP specifies those uncontested minor rule violations with sanctions not exceeding $2,500 that would not be subject to the provisions of Rule 19d–1(c)(1) under the Act[138] requiring that an SRO promptly file notice with the Commission of any final disciplinary action taken with respect to any person or organization.[139] The Exchange's MRVP includes the policies and procedures included in Equity Rule 9216(b), ''Procedure for Violations under Plan Pursuant to SEC Rule 19d–1(c)(2),'' and the rule violations included in Equity Rule IM–9216, ''Violations Appropriate for Disposition Under Plan Pursuant to SEC Rule 19d–1(c)(2).'' The Commission notes that the Exchange proposes to add to its MRVP the list of rules set forth in Equity Rule IM–9216, which rules are the same as those listed in Nasdaq's IM–9216.[140]

The Commission finds that the Exchange's MRVP is consistent with Sections 6(b)(1), 6(b)(5) and 6(b)(6) of the Act, which require, in part, that an exchange have the capacity to enforce compliance with, and provide appropriate discipline for, violations of the rules of the Commission and of the exchange.[141] In addition, because Equity Rule 9216(b) will offer procedural rights to a person sanctioned for a violation listed in Equity Rule IM–9216, the Commission believes that the Exchange's rules provide a fair procedure for the disciplining of members and associated persons, consistent with Section 6(b)(7) of the Act.[142]

The Commission also finds that the proposal to include the rules listed in Equity Rule IM–9216 in the MRVP is consistent with the public interest, the protection of investors, or otherwise in furtherance of the purposes of the Act, as required by Rule 19d–1(c)(2) under the Act,[143] because it should strengthen the Exchange's ability to carry out its oversight and enforcement responsibilities as an SRO in cases where full disciplinary proceedings are unsuitable in view of the minor nature of the particular violation.

In approving the proposed change to the Exchange's MRVP, the Commission in no way minimizes the importance of compliance with Exchange rules and all other rules subject to the imposition of fines under the MRVP. The Commission believes that the violation of any SRO rules, as well as Commission rules, is a serious matter. However, the Exchange's MRVP provides a reasonable means of addressing rule violations that do not rise to the level of requiring formal disciplinary proceedings, while providing greater flexibility in handling certain violations. The Commission expects that the Exchange will conduct surveillance with due diligence and make a determination based on its findings, on a case-by-case basis, whether a fine of more or less than the recommended amount is appropriate for a violation under the MRVP or whether a violation requires a formal disciplinary action under the Exchange's Equity Rule 9200 Series.

IV. Exemption From the Requirement To Register as a SIP

As described above, BX Equities LLC will be delegated the authority to act as a SIP for quotations and transaction information related to securities traded on the BX Equities Market and any trading facilities operated by BX Equities LLC. In the SIP Exemption Request Letter,[144] the Exchange, on behalf of BX Equities LLC, requested that the Commission grant BX Equities LLC a permanent exemption from the requirement under Section 11A(b) of the Act and Rule 609 thereunder that a securities information processor acting as an exclusive processor register with the Commission.[145] For the reasons discussed below, the Commission grants the requested exemption, subject to the conditions specified in this Order.

A. Overview

BX Equities LLC is jointly owned by the Exchange and its parent corporation, NASDAQ OMX. BX Equities LLC has been established for the purpose of operating an Exchange facility for the trading of cash equity securities. Pursuant to the proposed rule change approved in this Order, the Operating Agreement has been amended to provide that management of BX Equities LLC is vested solely in the Exchange. In addition, the Exchange will delegate the performance of certain of its market functions to BX Equities LLC with respect to the quoting and trading of cash equity securities, including the authority to act as a securities information processor for quoting and trading information related to cash equity securities traded on the BX Equities Market and any trading facilities operated by BX Equities LLC. Because BX Equities LLC will be engaging, on an exclusive basis on behalf of the Exchange, in collecting, processing, or preparing for distribution or publication information with respect to transactions or quotations on, or effected or made by means of, a facility of the Exchange, it will be an exclusive processor required to register pursuant to Section 11A(b) of the Act. Nevertheless, as further described in the SIP Exemption Request Letter, the Exchange and BX Equities LLC believe that the purposes of Section 11A(b) of

[137] *See* Securities Exchange Act Release No. 26737 (April 17, 1989), 1989 WL 550708 (File No. SR–BSE–88–2) (''MRVP Order'').

[138] 17 CFR 240.19d–1(c)(1).

[139] The Commission adopted amendments to paragraph (c) of Rule 19d–1 to allow SROs to submit for Commission approval plans for the abbreviated reporting of minor disciplinary infractions. *See* Securities Exchange Act Release No. 21013 (June 1, 1984), 49 FR 23829 (June 8, 1984). Any disciplinary action taken by an SRO against any person for violation of a rule of the SRO which has been designated as a minor rule violation pursuant to such a plan filed with the Commission will not be considered ''final'' for purposes of Section 19(d)(1) of the Act, 78 U.S.C. 78s(d), if the sanction imposed consists of a fine not exceeding $2,500 and the sanctioned person has not sought an adjudication, including a hearing, or otherwise exhausted his administrative remedies.

[140] *See* Equity Rule IM–9216. The Exchange represented that these rules are in addition to existing provisions of the MRVP that remain in effect with respect to the Exchange's Boston Options Exchange facility. *See* Notice, *supra* note 3, 73 FR at 69690.

[141] 15 U.S.C. 78f(b)(1), 78f(b)(5) and 78f(b)(6).

[142] 15 U.S.C. 78f(b)(7).

[143] 17 CFR 240.19d–1(c)(2).

[144] *See* SIP Exemption Request Letter, *supra* note 6.

[145] 15 U.S.C. 78k–1(b). Rule 609 under the Act, 17 CFR 242.609, requires that the registration of a securities information processor be on Form SIP, 17 CFR 249.1001.

the Act are not served by requiring BX Equities LLC to register as an exclusive processor under Section 11A(b) of the Act, because Section 11A(b) subjects a registered securities information processor to a regulatory regime to which the BX Equities Market will be subject in all material respects as a facility of a registered national securities exchange.

B. Discussion

Sections 11A(b)(1) and (2) of the Act and Rule 609 thereunder (formerly Rule 11Ab2–1) provide that a securities information processor[146] that is acting as an exclusive processor[147] register with the Commission by filing an application for registration on Form SIP. Section 11A(b)(1) of the Act and Rule 609(c) thereunder allow the Commission, by rule or order, to conditionally or unconditionally exempt any securities information processor from any provision of Section 11A(b) of the Act or the rules or regulations thereunder, if the Commission finds that such exemption is consistent with the public interest, the protection of investors, and the purposes of Section 11A(b).[148]

In its release adopting Rule 609, the Commission provides a framework for the consideration of exemption requests pursuant to Section 11A(b)(1) of the Act.[149] Specifically, the Commission indicates that the need for registration of an exclusive processor should be considered in respect of Sections 11A(b)(1), (b)(3) and (b)(5) and Sections 17(a) and (b) of the Act, insofar as they provide a framework for the surveillance and regulation of registered securities information processors. The Commission stated that any application for an exemption from registration should show not only how such exemption would be consistent with the statutory purposes discussed in the release, but also should demonstrate why, by virtue of the applicant's organization, operation or other characteristics, the applicant should be exempted from registration, the requirements of Section 11A(b) and the Commission's authority under Sections 17(a) and 17(b) of the Act.[150]

The Commission believes that BX Equities LLC will be acting as an exclusive processor as defined in Section 3(a)(22)(B) of the Act because it will engage on an exclusive basis on behalf of the Exchange, in collecting, processing, or preparing for distribution or publication information with respect to transactions or quotations on, or effected or made by means of, a facility of the Exchange. Further, BX Equities LLC, in carrying out market functions of the Exchange, will operate (and will be regulated) as a facility of the Exchange, which is a national securities exchange registered under Section 6 of the Act and the rules and regulations thereunder.[151] In the SIP Exemption Request Letter, the Exchange represents that BX Equities LLC will not perform any exclusive processor functions other than in its capacity as a facility for the Exchange.[152]

As discussed below, with respect to its operation as a facility of a registered national securities exchange, BX Equities LLC already will be subject to regulation and Commission oversight under the Act as a facility of a registered exchange.[153] Oversight and regulation of registered exchanges encompass and exceed the oversight and regulation to which BX Equities LLC will be subject pursuant to registration under Section 11A(b)(1) of the Act and the rules and regulations thereunder. Accordingly, the Commission believes that registration of BX Equities LLC as an exclusive processor under Section 11A(b)(1) of the Act with respect to those functions that it will carry out as a facility of the Exchange would not further the purposes of the Act.

1. Denial of Access to Services Provided by a Securities Information Processor or a National Securities Exchange

Section 11A(b)(5)(A) of the Act (1) requires a registered securities information processor to promptly file notice with the Commission if the processor prohibits or limits any person in respect of access to services offered, directly or indirectly, by the processor, and (2) provides that any such prohibition or limitation will be subject to Commission review, on its own motion or upon application by any person aggrieved.[154] If the prohibition or limitation is reviewed, the Commission shall dismiss the proceeding if it finds (after notice and opportunity for a hearing) that such prohibition or limitation is consistent with the provisions of the Act and the rules and regulations thereunder and that such person has not been discriminated against unfairly. If the Commission does not make such a finding, or if it finds that such prohibition or limitation imposes any burden on competition not necessary or appropriate in furtherance of the purposes of the Act, the Commission shall set aside the prohibition or limitation and require the securities information processor to permit such person access to services offered by the processor.[155]

BX Equities LLC, however, will be subject to similar Commission regulation and oversight pursuant to Sections 6(b)(7), 6(d), 19(d), and 19(f) of the Act with respect to its activities as a facility of the Exchange.[156] Section 19(d)(1) requires, in part, that an exchange promptly file notice with the Commission if the exchange prohibits or limits any person in respect to access to services offered by such exchange or member thereof.[157] Any such action for which the exchange must file notice is subject to Commission review.[158]

[146] Section 3(a)(22) of the Act, 15 U.S.C. 78c(a)(22)(A), defines the term securities information processor to mean any person engaged in the business of (i) collecting, processing, or preparing for distribution or publication, or assisting, participating in, or coordinating the distribution or publication of, information with respect to transactions in or quotations for any security (other than an exempted security) or (ii) distributing or publishing (whether by means of a ticker tape, a communications network, a terminal display device, or otherwise) on a current and continuing basis, information with respect to such transactions or quotations.

[147] Under Section 3(a)(22)(B) of the Act, 15 U.S.C. 78c(a)(22)(B), an exclusive processor is defined as any securities information processor or self-regulatory organization which, directly or indirectly, engages on an exclusive basis on behalf of any national securities exchange or registered securities association, or any national securities exchange or registered securities association which engages on an exclusive basis on its own behalf, in collecting, processing, or preparing for distribution or publication any information with respect to (i) transactions or quotations on or effected or made by means of any facility of such exchange or (ii) quotations distributed or published by means of any electronic system operated or controlled by such association.

[148] *See* 15 U.S.C. 78k–1(b)(1) and 17 CFR 242.609(c).

[149] *See* Securities Exchange Act Release No. 11673 (September 23, 1975), 40 FR 45422 (October 2, 1975) (adopting Commission Rule 11Ab2–1, which has been redesignated as Rule 609).

[150] *Id.* at 45423.

[151] Section 3(a)(2) of the Act, 15 U.S.C. 78c(a)(2), defines the term facility, with respect to an exchange, to include its premises, tangible or intangible property whether on the premises or not, any right to use such premises or property or any service thereof for the purpose of effecting or reporting a transaction on an exchange (including, among other things, any system of communication to or from the exchange, by ticker or otherwise, maintained by or with the consent of the exchange), and any right of the exchange to the use of any property or service.

[152] SIP Exemption Request Letter, *supra* note 6.

[153] The definition of an exchange under the Act includes ''the market facilities maintained by such exchange.'' *See* Section 3(a)(1) of the Act, 15 U.S.C. 78c(a)(1). The functions and operation of a national securities exchange encompass the collection, processing, and dissemination of information related to securities trading.

[154] *See* 15 U.S.C. 78k–1(b)(5)(A).

[155] *See* Section 11A(b)(5)(B) under the Act, 15 U.S.C. 78k–1(b)(5)(B).

[156] 15 U.S.C. 78f(b)(7) and (d) and 78s(d) and (f).

[157] 15 U.S.C. 78s(d)(1).

[158] 15 U.S.C. 78s(d)(2). *See also* Section 19(f) of the Act, 15 U.S.C. 78s(f).

Section 19(f) of the Act,[159] among other things, allows the Commission to set aside an SRO's prohibition or limitation with respect to access to services offered by the SRO if the Commission finds that the prohibition or limitation imposes any burden on competition not necessary or appropriate in furtherance of the purposes of the Act.

Section 6(b)(7) of the Act provides that the rules of an exchange, among other things, must provide a fair procedure for the prohibition or limitation by the exchange of any person with respect to access to services offered by the exchange or a member thereof.[160]

Section 6(d) of the Act [161] requires, among other things, that a national securities exchange that initiates a proceeding to determine whether to prohibit or limit a person's access to services offered by the exchange notify the person of the specific grounds for the prohibition or limitation and provide an opportunity to be heard. In addition, Section 6(d) provides that an exchange's determination to prohibit or limit a person's access to the exchange's services must be supported by a statement setting forth the specific grounds on which the prohibition or limitation is based.

The Commission therefore believes that regulation of the Exchange as a national securities exchange provides for equivalent regulation and Commission oversight of actions that BX Equities LLC may take in its capacity as a facility to deny access to services as would be the case were it to register as an exclusive processor under Section 11A(b) of the Act.

2. Limitation on Activities of a Securities Information Processor or a National Securities Exchange

Section 11A(b)(6) of the Act grants the Commission authority to censure or place limitations on the activities, functions, or operations of any registered securities information processor or suspend for a period not exceeding twelve months or revoke the registration of any such processor.[162] Likewise, Section 19(h)(1) of the Act grants the Commission authority to suspend for a period not exceeding twelve months or revoke the registration of an exchange, or to censure or impose limitations upon the activities, functions, and operations of an exchange.[163] The Commission therefore has the authority to place limitations on the activities of BX Equities LLC as a facility of a registered national securities exchange.

3. Access to Books and Records of a Securities Information Processor or a National Securities Exchange

Section 17(a)(1) of the Act requires that national securities exchanges and registered securities information processors make and keep for prescribed periods such records, furnish such copies thereof, and make and disseminate such reports as the Commission, by rule, prescribes as necessary or appropriate in the public interest, for the protection of investors, or otherwise in furtherance of the purposes of the Act.[164] Section 17(b) of the Act requires that such records be subject at any time, or from time to time, to such reasonable periodic, special, or other examinations by representatives of the Commission and the appropriate regulatory agency for such persons.[165]

The record retention and production requirements set out in Sections 17(a) and (b) of the Act therefore will be applicable to BX Equities LLC with respect to its activities as a facility of BX. Thus, requiring BX Equities LLC to register as an exclusive processor with respect to its activities as a facility of a registered exchange would serve no additional regulatory purpose in this instance.

C. Conclusion

On the basis of the foregoing, the Commission finds that, with respect to its activities as a facility of the Exchange, granting an exemption to BX Equities LLC from the requirement to register as a securities information processor pursuant to Section 11A(b) of the Act is consistent with the public interest, the protection of investors, and the purposes of Section 11A(b) of the Act, including maintenance of fair and orderly markets in securities and the removal of impediments to, and perfection of the mechanism of, a national market system.[166] This exemption is limited only to the exclusive processor activities that BX Equities LLC performs as a facility of the Exchange.

V. Conclusion

It is therefore ordered, pursuant to Section 19(b)(2) of the Act,[167] that the proposed rule change (SR–BSE–2008–48), as modified by Amendment Nos. 1 and 2, be, and hereby is, approved, except for inbound routing of orders from NES to the BX Equities Market, which is approved on a pilot basis through December 23, 2009.

Although the Commission's approval of the rule proposal, as amended, is final and the proposed rules are therefore effective,[168] it is further ordered that the operation of the BX Equities Market is conditioned on the satisfaction of the requirements below:

A. *Examination by the Commission.* The Exchange must have, and represent in a letter to the staff in the Commission's Office of Compliance Inspections and Examinations that it has, adequate surveillance procedures and programs in place to effectively regulate the BX Equities Market.

B. *17d–2 Agreement.* An agreement pursuant to Rule 17d–2 between FINRA and the Exchange that allocates to FINRA regulatory responsibility for those matters specified above [169] must be approved by the Commission, or the Exchange must demonstrate that it independently has the ability to fulfill all of its regulatory obligations.

C. *Delegation Agreement.* The Exchange and BX Equities LLC must enter into the Delegation Agreement as described above.[170]

It is further ordered, pursuant to Section 11A(b) of the Act,[171] that BX Equities LLC shall be exempt from registering as a securities information

[159] 15 U.S.C. 78s(f).

[160] 15 U.S.C. 78f(b)(7). Section 6(d)(2), 15 U.S.C. 78f(d)(2), provides procedural requirements for any such proceeding by an exchange.

[161] 15 U.S.C. 78f(d).

[162] 15 U.S.C. 78k–1(b)(6).

[163] 15 U.S.C. 78s(h)(1). *See also* Sections 19(h)(2), (h)(3), and (h)(4) of the Act, 15 U.S.C. 78s(h)(2), (h)(3), and (h)(4).

[164] 15 U.S.C. 78q(a). The Commission has promulgated rules pursuant to Section 17(a) of the Act that apply to national securities exchanges, but not registered securities information processors. *See, e.g.*, Rule 17a–1 under the Act, 17 CFR 240.17a–1 (requiring in part a national securities exchange to preserve, for a period of not less than five years, the first two in an easily accessible place, at least one copy of all documents that are made or received by it in the course of its business as such and in the conduct of its self-regulatory activity, and to furnish copies of such records to any representative of the Commission upon request). Form SIP, the application for registration of a securities information processor, does require that a securities information processor provide the Commission with certain information relating to its business organization, financial information, operational capability, and access to services. 17 CFR 249.1001.

[165] 15 U.S.C. 78q(b).

[166] The Commission may grant this exemption pursuant to delegated authority. 17 CFR 200.30–3(49).

[167] 15 U.S.C. 78s(b)(2).

[168] As noted above, inbound routing of orders from NES to the BX Equities Market, which is part of the Rule Proposal, is approved on a pilot basis through December 23, 2009.

[169] *See supra* notes 104 through 110 and accompanying text, notes 135 to 136 and accompanying text.

[170] *See supra* notes 30 to 38 and accompanying text.

[171] 15 U.S.C. 78k–1(b).

processor, subject to the conditions specified in this order.

For the Commission, by the Division of Trading and Markets, pursuant to delegated authority.[172]

Florence E. Harmon,

Acting Secretary.

[FR Doc. E8–31094 Filed 12–30–08; 8:45 am]

BILLING CODE 8011–01–P

SECURITIES AND EXCHANGE COMMISSION

[Release No. 34–59148; File No. SR–DTC–2008–12]

Self-Regulatory Organizations; The Depository Trust Company; Order Approving Proposed Rule Change As Amended To Increase Liquidity Resources

December 23, 2008.

I. Introduction

On August 26, 2008, The Depository Trust Company (''DTC'') filed with the Securities and Exchange Commission (''Commission'') and on September 9, 2008, and on September 30, 2008, amended proposed rule change SR–DTC–2008–12 pursuant to Section 19(b)(1) of the Securities Exchange Act of 1934 (''Act'').[1] Notice of the proposal was published in the **Federal Register** on October 21, 2008.[2] The Commission received no comment letters. For the reasons discussed below, the Commission is approving the proposed rule change, as amended.

II. Description

The proposed rule change seeks to increase the liquidity resources of DTC to ensure it has sufficient liquidity to cover the failure of a financial family of affiliated DTC Participants (''Affiliated Family'').[3] An Affiliated Family means a Participant that controls another Participant or other Participants and each Participant that is under the control of the controlling Participant. For purposes of this definition, ''control'' means the direct or indirect ownership of more than 50% of the voting securities or other voting interests of an entity.[4]

To ensure that DTC is able to complete its settlement obligations each day in the event of a Participant's inability to settle with DTC, DTC currently maintains liquidity resources of $2.5 billion composed of a $600 million all-cash Participants Fund and a committed line of credit in the amount of $1.9 billion with a consortium of banks. DTC's committed line of credit was recently increased from $1.4 billion. Given that financial firms have become increasingly interdependent, DTC recognizes that there is a possibility of ''contagion'' among several related Participants. Financial problems at one Participant may impact the stability of another related Participant, potentially causing both to fail simultaneously. Because of concerns about this potential, DTC and its regulators have agreed that DTC should increase its available liquidity resources so that DTC would be able to withstand the failure of a financial family of affiliated DTC Participants.[5] To do so, DTC will (i) increase by $700 million the total cash deposits to DTC's all-cash Participants Fund so that the aggregate amount of the required cash deposits to DTC's Participant Fund plus the required preferred stock investments of Participants will be increased to $1.3 billion from $600 million and (ii) limit the aggregate maximum net debit cap[6] for any Affiliated Family to $3 billion.

The following variables are currently used in the determination of each Participant's required Participant's Fund deposit:

(1) The six largest intraday net debit peaks for a Participant over a rolling 60-business day period.

(2) Minimum Fund Deposit: $10,000.

(3) Fund Size: $600 Million.

DTC will continue to employ these variables to calculate the first $600 million of the required $1.3 billion Fund. The remaining $700 million will be allocated proportionately among the Affiliated Families whose aggregate net debit caps per family exceed $2.3 billion.[7] An Affiliated Family whose net debit cap exceeds $2.3 billion would be required to contribute a portion of the remaining $700 million calculated by dividing the amount by which the Affiliated Family's net debit cap exceeds $2.3 billion by the sum of the amounts by which each Affiliated Family's net debit cap exceeds $2.3 billion.[8] Once an Affiliated Family's additional Participant's Fund requirement has been established, DTC will allocate this sum among the Participants comprising the Affiliated Family in proportion to each Participant's adjusted net debit cap.[9] This algorithm will be systematically used to calculate the allocations for the Participants of each Affiliated Family, unless each of the Participants that comprise an Affiliated Family provides DTC with written instructions to allocate the aggregate net debit cap differently. While the Participants of an Affiliated Family may give instructions to reapportion their net debit caps among themselves, they cannot reallocate to any one Participant a debit cap that is greater than the DTC system calculated net debit cap for that Participant.

III. Discussion

Section 19(b) of the Act directs the Commission to approve a proposed rule change of a self-regulatory organization if it finds that such proposed rule change is consistent with the requirements of the Act and the rules and regulations thereunder applicable to such organization. Section 17A(b)(3)(F) of the Act requires that the rules of a clearing agency be designed to assure the safeguarding of securities and funds in DTC's custody or control or for which it is responsible.[10] The Commission believes that DTC's rule change is consistent with this Section because it should help assure the safeguarding of securities and funds in DTC's custody or

[172] 17 CFR 200.30–3(a)(12).

[1] 15 U.S.C. 78s(b)(1).

[2] Securities Exchange Act Release No. 58757A (October 14, 2008), 73 FR 62578.

[3] DTC currently has 332 Participants, most of which are broker-dealers or banks with one Participant account. Large integrated organizations, however, typically have several ''legal entities'' with each being DTC Participants (*e.g.*, a bank custodian entity and a separate securities firm entity).

[4] Under this definition, DTC currently has 47 Affiliated Families.

[5] The Commission is the primary federal regulator of DTC as a clearing agency. DTC is also a limited purpose trust company established under New York Banking Law and a state member bank of the Federal Reserve System. As such, the The Federal Reserve Bank of New York (FRBNY) and the New York State Department of Banking also have regulatory authority over DTC.

[6] In order to ensure that timely settlement can be completed in the event of a failure to settle by the Participant with the largest settlement obligation, DTC by sets debit limits (called net debit caps) for each Participant. A Participant's net debit is limited throughout the processing day to a net debit cap that is the lesser of four amounts: (1) An amount based on the average of the three largest net debits that the Participant incurred over a rolling 70 business day period, (2) an amount, if any, determined by the Participant's settling bank, (3) an amount, if any, determined by DTC, or (4) $1.8 billion.

[7] This amount is based on DTC's practice of maintaining a liquidity cushion of $200 million between its largest net debit cap and its liquidity resources (*i.e.*, DTC's current liquidity of $2.5 billion minus the $200 liquidity cushion it maintains).

[8] DTC will adjust the net debit caps of the Participants that comprise an Affiliated Family so that the aggregate affiliated net debit cap does not exceed $3 billion. Currently 18 Affiliate Families consisting of 57 DTC Participants will be subject to these Affiliated Family provisions. Thirteen Affiliated Families will be required to reduce their overall Net debit caps.

[9] The proposed DTC Affiliated Family Algorithm can be viewed on the Commission's Web site at *http://www.sec.gov/rules/sro/dtc/2008/34-58757.pdf* and at DTC's Web site at *http://www.dtcc.com/downloads/legal/rule_filings/2008/dtc/2008-12.pdf.*

[10] 15 U.S.C. 78q–1(b)(3)(F).

control or for which it is responsible by increasing DTC's liquidity resources to enable it to complete settlement in the event of a failure of a financial family of affiliated Participants.

IV. Conclusion

On the basis of the foregoing, the Commission finds that the proposed rule change, as amended, is consistent with the requirements of the Act and in particular Section 17A of the Act and the rules and regulations thereunder. In approving the proposed rule change, the Commission considered the proposal's impact on efficiency, competition, and capital formation.

It is therefore ordered, pursuant to Section 19(b)(2) of the Act, that the proposed rule change (File No. SR–DTC–2008–12), as amended, be and hereby is approved.

For the Commission by the Division of Trading and Markets, pursuant to delegated authority.[11]

Florence E. Harmon,

Acting Secretary.

[FR Doc. E8–31048 Filed 12–30–08; 8:45 am]

BILLING CODE 8011–01–P

[11] 17 CFR 200.30–3(a)(12).

SECURITIES AND EXCHANGE COMMISSION

[Release No. 34–59138; File No. SR–FINRA–2008–064]

Self-Regulatory Organizations; Financial Industry Regulatory Authority, Inc.; Notice of Proposed Rule Change To Amend NASD Interpretive Material (IM) 2110–2 (Trading Ahead of Customer Limit Order)

December 22, 2008.

Pursuant to Section 19(b)(1) of the Securities Exchange Act of 1934 (''Act'')[1] and Rule 19b–4 thereunder,[2] notice is hereby given that on December 17, 2008, Financial Industry Regulatory Authority, Inc. (''FINRA'') (f/k/a National Association of Securities Dealers, Inc. (''NASD'')) filed with the Securities and Exchange Commission (''SEC'' or ''Commission'') the proposed rule change as described in Items I, II, and III below, which Items have been prepared by FINRA. The Commission is publishing this notice to solicit comments on the proposed rule change from interested persons.

[1] 15 U.S.C. 78s(b)(1).

[2] 17 CFR 240.19b–4.

I. Self-Regulatory Organization's Statement of the Terms of Substance of the Proposed Rule Change

FINRA is proposing to amend NASD Interpretive Material (IM) 2110–2 (Trading Ahead of Customer Limit Order) to provide that, for the purpose of determining the minimum price improvement obligation where there is no published current inside spread, members may calculate a current inside spread by contacting and obtaining priced quotations from at least two unaffiliated dealers.

The text of the proposed rule change is attached as Exhibit 5.[3]

II. Self-Regulatory Organization's Statement of the Purpose of, and Statutory Basis for, the Proposed Rule Change

In its filing with the Commission, FINRA included statements concerning the purpose of and basis for the proposed rule change and discussed any comments it received on the proposed rule change. The text of these statements may be examined at the places specified in Item IV below. FINRA has prepared summaries, set forth in sections A, B, and C below, of the most significant aspects of such statements.

A. Self-Regulatory Organization's Statement of the Purpose of, and Statutory Basis for, the Proposed Rule Change

1. Purpose

NASD IM–2110–2 (commonly referred to as the ''Manning Rule'') generally prohibits a member from trading for its own account at prices that would satisfy a customer's limit order unless the member immediately thereafter executes the customer limit order at the price at which it traded for its own account or at a better price. The legal underpinnings for IM–2110–2 are a firm's basic fiduciary obligations under agency law and the requirement that it must, in the conduct of its business, ''observe high standards of commercial honor and just and equitable principles of trade.''

On September 12, 2008, the SEC approved amendments to the minimum price-improvement standards in IM–2110–2 to provide tiered standards that vary according to the price of the customer limit order.[4] The amendments became effective on November 11, 2008.[5] Revised NASD IM–2110–2 prescribes detailed minimum levels of price improvement that a member must provide in order to trade ahead of an unexecuted customer limit order without triggering the protections provided by the rule. In other words, the price-improvement standards in IM–2110–2 set forth the minimum amount by which a member must trade, in addition to the price of the customer buy limit order (or less than the price of a customer sell order), to avoid triggering the protections provided by IM–2110–2.

The minimum price improvement tiers are as follows:

(1) For customer limit orders priced greater than or equal to $1.00, the minimum amount of price improvement required is $0.01 for NMS stocks and the lesser of $0.01 or one-half (½) of the current inside spread for OTC equity securities;

(2) For customer limit orders priced greater than or equal to $.01 and less than $1.00, the minimum amount of price improvement required is the lesser of $0.01 or one-half (½) of the current inside spread;

(3) For customer limit orders priced less than $.01 but greater than or equal to $0.001, the minimum amount of price improvement required is the lesser of $0.001 or one-half (½) of the current inside spread;

(4) For customer limit orders priced less than $.001 but greater than or equal to $0.0001, the minimum amount of price improvement required is the lesser of $0.0001 or one-half (½) of the current inside spread;

(5) For customer limit orders priced less than $.0001 but greater than or equal to $0.00001, the minimum amount of price improvement required is the lesser of $0.00001 or one-half (½) of the current inside spread;

(6) For customer limit orders priced less than $.00001, the minimum amount of price improvement required is the lesser of $0.000001 or one-half (½) of the current inside spread; and

(7) For customer limit orders priced outside the best inside market, the minimum amount of price improvement required must either meet the requirements set forth above or the member must trade at a price at or inside the best inside market for the security.

Therefore, if a firm is holding a customer limit order to buy priced at $.75 and the applicable minimum price improvement standard is $.01, the firm would be permitted to buy at $.76 or

[3] The Commission notes that Exhibit 5 is attached to the rule filing filed with the Commission but not to this release. The text of the proposed rule change is available at FINRA, on its Web site (*http://www.finra.org*), and at the Commission's Public Reference Room.

[4] *See* Securities Exchange Act Release No. 58532 (September 12, 2008), 73 FR 54649 (September 22, 2008) (order approving SR–NASD–2007–041).

[5] *See Regulatory Notice* 08–49 (September 2008).

higher without triggering the requirements of IM–2110–2.

The proposed rule change is being filed to provide members with an alternative method of calculating the minimum price improvement in cases where a member receives a limit order priced to sell an OTC equity security below $1.00 and there is no quoted market. The minimum price-improvement standards are either a fixed amount or one-half (½) of the current inside spread. However, where there is no current inside spread, the minimum price-improvement standard defaults to the fixed amount which, in certain circumstances, can equal the price of the customer limit order. For example, where a member receives a customer limit order priced at $.01 and there is no current published inside spread, the minimum price-improvement standard would still be equal to $.01, which would require the member to sell at 0 ($.01 minus $.01) to avoid triggering the customer limit order. Thus, under the current rule, the member is effectively prohibited from selling while the customer limit order is pending. FINRA believes that this result is overly restrictive.

Thus FINRA is proposing to amend IM–2110–2 to provide that, for the purpose of determining the minimum price improvement obligation where there is no published current inside spread, member firms may calculate a current inside spread by contacting and obtaining priced quotations from at least two unaffiliated dealers. FINRA believes that obtaining priced quotations from a minimum of two unaffiliated dealers provides an adequate proxy for an inside spread typically displayed for an OTC equity security, but members are free to contact more than two unaffiliated dealers. Once the member has obtained bid and ask prices from at least two unaffiliated dealers, the highest bid and lowest offer obtained must be used as the basis for calculating the current inside spread for purposes of determining the member's minimum price improvement obligation.

Additionally, where there is a one-sided quote, the proposed rule change would permit a member to determine the current inside spread by using the best price obtained from at least two unaffiliated dealers on the other side of the quote. Members must document (1) the name of each dealer contacted and (2) the quotations received that were used as the basis for determining the current inside spread. The proposed rule change would apply solely to minimum price-improvement calculations under IM–2110–2 and would not implicate other rules or requirements (*e.g.*, Three Quote Rule).

The proposed rule change would address the unintended effective prohibition on selling while certain customer limit orders are pending by providing members with an alternative means of determining the inside spread for use as the basis for calculating its minimum price-improvement obligation.

2. Statutory Basis

FINRA believes that the proposed rule change is consistent with the provisions of Section 15A(b)(6) of the Act,[6] which requires, among other things, that FINRA rules must be designed to prevent fraudulent and manipulative acts and practices, to promote just and equitable principles of trade, and, in general, to protect investors and the public interest. FINRA believes that the proposed rule change will address an unintended consequence of the minimum price-improvement standards set forth in IM–2110–2 while continuing to promote investor protection and improving the treatment of customer limit orders.

B. Self-Regulatory Organization's Statement on Burden on Competition

FINRA does not believe that the proposed rule change will result in any burden on competition that is not necessary or appropriate in furtherance of the purposes of the Act.

C. Self-Regulatory Organization's Statement on Comments on the Proposed Rule Change Received From Members, Participants or Others

Written comments were neither solicited nor received.

III. Date of Effectiveness of the Proposed Rule Change and Timing for Commission Action

Within 35 days of the date of publication of this notice in the **Federal Register** or within such longer period (i) as the Commission may designate up to 90 days of such date if it finds such longer period to be appropriate and publishes its reasons for so finding or (ii) as to which the self-regulatory organization consents, the Commission will:

(A) by order approve such proposed rule change, or

(B) institute proceedings to determine whether the proposed rule change should be disapproved.

IV. Solicitation of Comments

Interested persons are invited to submit written data, views, and arguments concerning the foregoing, including whether the proposed rule change is consistent with the Act. Comments may be submitted by any of the following methods:

Electronic Comments

- Use the Commission's Internet comment form (*http://www.sec.gov/rules/sro.shtml*); or
- Send an e-mail to *rule-comments@sec.gov.* Please include File Number SR–FINRA–2008–064 on the subject line.

Paper Comments

- Send paper comments in triplicate to Secretary, Securities and Exchange Commission, 100 F Street, NE., Washington, DC 20549–1090.

All submissions should refer to File Number SR–FINRA–2008–064. This file number should be included on the subject line if e-mail is used. To help the Commission process and review your comments more efficiently, please use only one method. The Commission will post all comments on the Commission's Internet Web site (*http://www.sec.gov/rules/sro.shtml*). Copies of the submission, all subsequent amendments, all written statements with respect to the proposed rule change that are filed with the Commission, and all written communications relating to the proposed rule change between the Commission and any person, other than those that may be withheld from the public in accordance with the provisions of 5 U.S.C. 552, will be available for inspection and copying in the Commission's Public Reference Room, 100 F Street, NE., Washington, DC 20549, on official business days between the hours of 10 a.m. and 3 p.m. Copies of the filing also will be available for inspection and copying at the principal office of FINRA. All comments received will be posted without change; the Commission does not edit personal identifying information from submissions. You should submit only information that you wish to make available publicly. All submissions should refer to File Number SR–FINRA–2008–064 and should be submitted on or before January 21, 2009.

For the Commission, by the Division of Trading and Markets, pursuant to delegated authority.[7]

Florence E. Harmon,

Acting Secretary.

[FR Doc. E8–31051 Filed 12–30–08; 8:45 am]

BILLING CODE 8011–01–P

[6] 15 U.S.C. 78*o*–3(b)(6).

[7] 17 CFR 200.30–3(a)(12).

SECURITIES AND EXCHANGE COMMISSION

[Release No. 34–59136; File No. SR–ISE–2008–95]

Self-Regulatory Organizations; International Securities Exchange, LLC; Notice of Filing and Immediate Effectiveness of Proposed Rule Change To Extend the Close of Trading on the ISE Stock Exchange

December 22, 2008.

Pursuant to Section 19(b)(1) of the Securities Exchange Act of 1934 (the ''Act''),[1] and Rule 19b–4 thereunder,[2] notice is hereby given that on December 17, 2008, the International Securities Exchange, LLC (the ''Exchange'' or the ''ISE'') filed with the Securities and Exchange Commission (''Commission'') the proposed rule change as described in Items I and II below, which items have been prepared by the Exchange. The Exchange has filed the proposal pursuant to Section 19(b)(3)(A) of the Act[3] and Rule 19b–4(f)(6) thereunder,[4] which renders the proposal effective upon filing with the Commission. The Commission is publishing this notice to solicit comments on the proposed rule change from interested persons.

I. Self-Regulatory Organization's Statement of the Terms of Substance of the Proposed Rule Change

The Exchange submits this rule filing to extend the close of trading for equity securities from 5 p.m. Eastern Time (''ET'') to 8 p.m. ET. The text of the proposed rule change is available on the Exchange's Web site *http://www.ise.com*, at the principal office of the Exchange, and at the Commission's Public Reference Room.

II. Self-Regulatory Organization's Statement of the Purpose of, and Statutory Basis for, the Proposed Rule Change

In its filing with the Commission, the Exchange included statements concerning the purpose of, and basis for, the proposed rule change and discussed any comments it received on the proposed rule change. The text of these statements may be examined at the places specified in Item IV below. The self-regulatory organization has prepared summaries, set forth in Sections A, B and C below, of the most significant aspects of such statements.

A. Self-Regulatory Organization's Statement of the Purpose of, and Statutory Basis for, the Proposed Rule Change

1. Purpose

The Exchange proposes to extend the close of trading for equity securities from 5 p.m. ET to 8 p.m. ET. Currently, the Exchange has a Post-Market Session, which begins at the conclusion of the Regular-Market Session and closes at 5 p.m. ET. The Exchange is now proposing to amend Rule 2102 to conclude the Post-Market Session at 8 p.m. ET.

Trading during expanded hours involves potential risks, including the possibility of lower liquidity, higher volatility, changing prices, unlinked markets with the possibility of trade-throughs, and wider spreads. Moreover, trades executed during these sessions may receive executions at inferior prices when compared to the high/low of the day. The Supplementary Material to Rule 2102 presently requires Equity EAMs that submit orders during the Post-Market Session on behalf of non-members to disclose the risks of participating in such session to their customers. This customer disclosure requirement, along with all other equity rules and trading surveillance that currently apply during the Post-Market Session will continue to apply to the extended time-period of 5 p.m. ET to 8 p.m. ET.

2. Statutory Basis

The Exchange believes the proposed rule change is consistent with the Act and the rules and regulations under the Act applicable to a national securities exchange and, in particular, the requirements of Section 6(b) of the Act.[5] Specifically, the Exchange believes the proposed rule change is consistent with Section 6(b)(5) of the Act's[6] requirements that the rules of a national securities exchange be designed to promote just and equitable principles of trade, to prevent fraudulent and manipulative acts and, in general, to protect investors and the public interest. In particular, the proposed rule change will allow the Exchange to provide a competitive marketplace for Equity EAMs to trade securities until 8 p.m. ET.

B. Self-Regulatory Organization's Statement on Burden on Competition

The proposed rule change does not impose any burden on competition that is not necessary or appropriate in furtherance of the purposes of the Act.

C. Self-Regulatory Organization's Statement on Comments on the Proposed Rule Change Received From Members, Participants or Others

The Exchange has not solicited, and does not intend to solicit, comments on this proposed rule change. The Exchange has not received any unsolicited written comments from members or other interested parties.

III. Date of Effectiveness of the Proposed Rule Change and Timing for Commission Action

Because the foregoing proposed rule change does not:

(i) Significantly affect the protection of investors or the public interest;

(ii) Impose any significant burden on competition; and

(iii) Become operative for 30 days from the date on which it was filed, or such shorter time as the Commission may designate if consistent with the protection of investors and the public interest, it has become effective pursuant to Section 19(b)(3)(A) of the Act[7] and Rule 19b–4(f)(6) thereunder.[8]

ISE has asked the Commission to waive the 30-day operative delay. The Commission believes that such waiver is consistent with the protection of investors and the public interest because such waiver should benefit investors by allowing ISE, without undue delay, to expand its hours of trading, which should add competition in the trading of equity securities and new derivative securities products. In addition, proposed ISE Rule 2102 is closely modeled after similar rules of other national securities exchanges[9] and does not raise any novel or significant issues. Therefore, the Commission designates the proposed rule change as operative upon filing.[10]

At any time within 60 days of the filing of the proposed rule change the Commission may summarily abrogate such rule change if it appears to the Commission that such action is necessary or appropriate in the public interest, for the protection of investors,

[1] 15 U.S.C. 78s(b)(1).

[2] 17 CFR 240.19b–4.

[3] 15 U.S.C. 78s(b)(3)(A).

[4] 17 CFR 240.19b–4(f)(6).

[5] 15 U.S.C. 78f(b).

[6] 15 U.S.C. 78f(b)(5).

[7] 15 U.S.C. 78s(b)(3)(A).

[8] 17 CFR 240.19b–4(f)(6). The Commission notes that ISE has satisfied the five-day pre-filing notice requirement.

[9] *See* NYSE Arca Equities Rule 7.34 (NYSE Arca's extended hours for the trading of equities last until 8 p.m. ET) and Nasdaq Rule 4120(b)(4) (Nasdaq's post-market session for equities lasts until 8 p.m. ET).

[10] For purposes only of waiving the operative date of this proposal, the Commission has considered the rule's impact on efficiency, competition, and capital formation. *See* 15 U.S.C. 78c(f).

or otherwise in furtherance of the purposes of the Act.

IV. Solicitation of Comments

Interested persons are invited to submit written data, views, and arguments concerning the foregoing, including whether the proposed rule change is consistent with the Act. Comments may be submitted by any of the following methods:

Electronic Comments

- Use the Commission's Internet comment form *http://www.sec.gov/rules/sro.shtml;* or
- Send an e-mail to *rule-comments@sec.gov.* Please include File No. SR–ISE–2008–95 on the subject line.

Paper Comments

- Send paper comments in triplicate to Secretary, Securities and Exchange Commission, 100 F Street, NE., Washington, DC 20549–1090.

All submissions should refer to File Number SR–ISE–2008–95. This file number should be included on the subject line if e-mail is used. To help the Commission process and review your comments more efficiently, please use only one method. The Commission will post all comments on the Commissions Internet Web site (*http://www.sec.gov/rules/sro.shtml*). Copies of the submission, all subsequent amendments, all written statements with respect to the proposed rule change that are filed with the Commission, and all written communications relating to the proposed rule change between the Commission and any person, other than those that may be withheld from the public in accordance with the provisions of 5 U.S.C. 552, will be available for inspection and copying in the Commission's Public Reference Room on official business days between the hours of 10 a.m. and 3 p.m. Copies of such filing also will be available for inspection and copying at the principal office of the ISE. All comments received will be posted without change; the Commission does not edit personal identifying information from submissions. You should submit only information that you wish to make available publicly. All submissions should refer to File Number SR–ISE–2008–95 and should be submitted by January 21, 2009.

For the Commission, by the Division of Trading and Markets, pursuant to delegated authority.[11]

Florence E. Harmon,

Acting Secretary.

[FR Doc. E8–31050 Filed 12–30–08; 8:45 am]

BILLING CODE 8011–01–P

SECURITIES AND EXCHANGE COMMISSION

[Release No. 34–59153; File No. SR–Nasdaq–2008–098]

Self-Regulatory Organizations; The NASDAQ Stock Market LLC; Notice of Filing and Order Granting Accelerated Approval of Proposed Rule Change Regarding Routing to an Affiliated Exchange

December 23, 2008.

Pursuant to Section 19(b)(1) of the Securities Exchange Act of 1934 (''Act''),[1] and Rule 19b–4 thereunder,[2] notice is hereby given that on December 15, 2008, The NASDAQ Stock Market LLC (''Nasdaq'' or ''Exchange'') filed with the Securities and Exchange Commission (''Commission'') the proposed rule change as described in Items I and II below, which Items have been prepared substantially by Nasdaq. The Commission is publishing this notice and order to solicit comments on the proposed rule change from interested persons, and is approving the proposal on an accelerated basis.

I. Self-Regulatory Organization's Statement of the Terms of Substance of the Proposed Rule Change

Nasdaq is proposing a rule change to amend: (i) Nasdaq Rule 4751 to modify the restriction on routing of Directed Orders to a facility of an exchange that is an affiliate of Nasdaq and (ii) Nasdaq Rule 4758 to provide for the establishment of procedures designed to manage the flow of confidential information between Nasdaq and its facilities (including its routing facility Nasdaq Execution Services, LLC) and other entities.

The text of the proposed rule change is available from Nasdaq's Web site at *http://nasdaq.cchwallstreet.com*, at Nasdaq's principal office, and at the Commission's Public Reference Room.

Proposed new language is in italics.[3]

* * * * *

Nasdaq Rules

Equity Rules

4751. Definitions

(a)–(e) No change.

(f) The term ''Order Type'' shall mean the unique processing prescribed for designated orders that are eligible for entry into the System, and shall include:

(1)–(8) No change.

(9) ''Directed Orders'' are orders that are directed to an exchange other than Nasdaq as directed by the entering party without checking the Nasdaq book. If unexecuted, the order (or unexecuted portion thereof) shall be returned to the entering party. This option may only be used for orders with time-in-force parameters of IOC. Directed Orders may be designated as inter-market sweep orders by the entering party to execute against the full displayed size of any protected bid or offer (as defined in Rule 600(b) of Regulation NMS under the Act). A broker-dealer that designates an order as an intermarket sweep order has the responsibility of complying with Rules 610 and 611 of Regulation NMS.

Directed Orders may not be directed to a facility of an exchange that is an affiliate of Nasdaq *except for Directed Orders directed to the NASDAQ OMX BX Equities Market.*

(g)–(i) No change.

4758. Order Routing

(a) No change.

(b) Routing Broker

(1)–(7) No change.

(8) Nasdaq Execution Services LLC shall establish and maintain procedures and internal controls reasonably designed to adequately restrict the flow of confidential and proprietary information between the NASDAQ Stock Market LLC and its facilities (including Nasdaq Execution Services LLC as its routing facility) and any other entity.

* * * * *

II. Self-Regulatory Organization's Statement of the Purpose of, and Statutory Basis for, the Proposed Rule Change

In its filing with the Commission, Nasdaq included statements concerning the purpose of, and basis for, the proposed rule change. The text of these statements may be examined at the places specified in Item III below, and is set forth in Sections A, B, and C below.

---

[11] 17 CFR 200.30–3(a)(12).

[1] 15 U.S.C. 78s(b)(1).

[2] 17 CFR 240.19b–4.

[3] Changes are marked to the rule text that appears in the electronic manual of Nasdaq found at *http://nasdaq.cchwallstreet.com.*

A. Self-Regulatory Organization's Statement of the Purpose of, and Statutory Basis for, the Proposed Rule Change

1. Purpose

a. Affiliation and Order Routing

The NASDAQ OMX Group, Inc. (''NASDAQ OMX''), a Delaware corporation, owns three U.S. registered securities exchanges—Nasdaq, NASDAQ OMX PHLX, Inc. (''PHLX'') and The Boston Stock Exchange, Incorporated, to be renamed NASDAQ OMX BX, Inc. (''BX'').[4] In addition, NASDAQ OMX currently indirectly owns Nasdaq Execution Services, LLC (''NES''), a registered broker-dealer and a member of BX. Thus, NES is an affiliate of each of Nasdaq, PHLX and BX.

Although BX does not currently have any equity trading operations, BX has proposed a new rulebook for BX to support the resumption of these operations.[5] Although BX will not route to other market centers, BX will receive orders routed to it by other market centers, including Nasdaq.[6]

NES is the approved outbound routing facility of Nasdaq for cash equities, providing outbound routing from Nasdaq to other market centers. NES does not provide inbound routing to Nasdaq. The acquisition of NES by NASDAQ OMX was approved by the Commission in 2004 and 2005[7] and the rules under which NES currently routes orders from Nasdaq to other market centers were approved initially by the Commission in 2006 and have been amended on several occasions.[8] Nasdaq Rules 4751 and 4758 establish the conditions under which Nasdaq is permitted to own and operate NES in its capacity as a facility of Nasdaq that routes orders from Nasdaq to other market centers. The conditions include requirements that: (1) NES is operated as a facility of Nasdaq; (2) NES will not engage in any business other than: (i) As an outbound router for Nasdaq and (ii) any other activities it may engage in as approved by the Commission; (3) for purposes of Commission Rule 17d–1 under the Act,[9] the designated examining authority of NES is a self-regulatory organization unaffiliated with Nasdaq; (4) use of NES to route orders to other market centers is optional;[10] and (5) Nasdaq will not route orders to an affiliated exchange, such as BX, unless they check the Nasdaq book prior to routing.

The Commission has approved NES's affiliation with BX subject to the conditions that: (1) NES remains a facility of Nasdaq; (2) use of NES's routing function by Nasdaq members continues to be optional and (3) NES does not provide routing of Directed Orders to BX or any trading facilities thereof, unless such orders first attempt to access any liquidity on the Nasdaq book.[11]

Nasdaq proposes that, upon the resumption of cash equity trading by BX, NES, in its operation as a facility of Nasdaq, be permitted to route all orders, including Directed Orders, to BX's equity market without checking the Nasdaq book prior to routing. Directed Orders are orders that route directly to other exchanges on an immediate-or-cancel basis without first checking the Nasdaq book for liquidity.[12] In order to modify the conditions regarding the operation of NES and allow NES to route Directed Orders to BX, Nasdaq proposes to modify the restriction in Nasdaq Rule 4751(f)(9) that prohibits the routing of Directed Orders to a facility of an exchange that is an affiliate of Nasdaq. Under the proposed rule change, inbound routing of Directed Orders to the NASDAQ OMX BX Equities Market would be permitted.

On September 29, 2008, the Commission approved rule changes to permit the NYSE, NYSE Arca and NYSE Alternext US to accept inbound orders that their affiliate Arca Securities routes in its capacity as a facility of NYSE or NYSE Arca, subject to certain limitations and conditions intended to address the Commission's concerns regarding affiliation.[13] In the orders approving these rule changes, the Commission noted its concerns about potential informational advantages and conflicts of interest between an exchange's self-regulatory obligations and its commercial interest when the exchange is affiliated with one of its members, but determined that the proposed limitations and conditions were sufficient to mitigate its concerns.[14]

Nasdaq proposes to amend Nasdaq Rule 4758 to provide that NES will establish and maintain procedures and internal controls reasonably designed to adequately restrict the flow of confidential and proprietary information between Nasdaq and its facilities (including NES) and any other entity.[15]

In addition, in the BX Rulebook Proposal, BX is proposing a rule change and certain undertakings intended to manage the flow of confidential and proprietary information between NES and BX and to minimize potential conflicts of interest.[16]

2. Statutory Basis

Nasdaq believes that the proposed rule change is consistent with the provisions of Section 6 of the Act,[17] in

[4] *See* Securities Exchange Act Release No. 58927 (November 10, 2008), 73 FR 69685 (November 19, 2008) (SR–BSE–2008–48). This filing also proposes a new rule book for cash equities trading (''BX Rulebook Proposal'') on a facility of BX, to be named the NASDAQ OMX BX Equities Market.

[5] *Id.*

[6] PHLX does not currently trade cash equities, and therefore this filing does not apply to it. Nasdaq is not at this time proposing to modify limits on routing options to affiliated exchanges.

[7] *See* Securities Exchange Act Release Nos. 50311 (September 3, 2004), 69 FR 54818 (September 10, 2004) (Order Granting Application for a Temporary Conditional Exemption Pursuant To Section 36(a) of the Exchange Act by the National Association of Securities Dealers, Inc. Relating to the Acquisition of an ECN by The Nasdaq Stock Market, Inc.) and 52902 (December 7, 2005), 70 FR 73810 (December 13, 2005) (SR–NASD–2005–128) (Order Approving a Proposed Rule Change To Establish Rules Governing the Operation of the INET System).

[8] *See* Securities Exchange Act Release Nos. 58752 (October 8, 2008), 73 FR 61181 (October 15, 2008) (SR–NASDAQ–2008–079); 58135 (July 10, 2008), 73 FR 40898 (July 16, 2008) (SR–NASDAQ–2008–061); 58069 (June 30, 2008), 73 FR 39360 (July 9, 2008) (SR–NASDAQ–2008–054); 56708 (October 26, 2007), 72 FR 61925 (November 1, 2007) (SR–NASDAQ–2007–078); 56867 (November 29, 2007), 72 FR 69263 (December 7, 2007) (SR–NASDAQ–2007–065); 55335 (February 23, 2007), 72 FR 9369 (March 1, 2007) (SR–NASDAQ–2007–005); 54613 (October 17, 2006), 71 FR 62325 (October 24, 2006) (SR–NASDAQ 2006–043); 54271 (August 3, 2006), 71 FR 45876 (August 10, 2006) (SR–NASDAQ–2006–027); and 54155 (July 14, 2006), 71 FR 41291 (July 20, 2006) (SR–NASDAQ–2006–001).

[9] 17 CFR 240.17d–1.

[10] Because only Nasdaq members may enter orders into Nasdaq, it also follows that routing by NES is available only to Nasdaq members.

[11] *See* Securities Exchange Act Release No. 58324 (August 7, 2008), 73 FR 46936 (August 12, 2008) (SR–BSE–2008–23).

[12] Rules 4751 and 4755 provide for routing of ''directed orders'' to automated market centers other than Nasdaq on an ''immediate-or-cancel'' basis. Such directed orders may be designated as intermarket sweep orders (''ISOs''), which may be executed by the receiving venue based on the representation of the market participant that it has routed to all superior protected quotations, or not so designated, in which case the orders will execute only if their execution would not result in a trade-through.

[13] *See* Securities Exchange Act Release Nos. 58681 (September 29, 2008), 73 FR 58285 (October 6, 2008) (SR–NYSEArca–2008–90) (''NYSE Arca Order''); 58680 (September 29, 2008), 73 FR 58283 (October 6, 2008) (SR–NYSE–2008–76) (''NYSE Order''); 58673 (September 29, 2008), 73 FR 57707 (October 3, 2008) (SR–Amex–2008–62) (''NYSE Alternext US Order'').

[14] The Commission also set forth these concerns in its order abrogating NYSE Arca Rule 7.31(x). *See* Securities Exchange Act Release No. 57648 (April 11, 2008), 73 FR 20981 (April 17, 2008).

[15] This sentence was modified at the request of the Exchange from the text contained in the proposed rule change. Telephone conversation between John Yetter, Vice President and Deputy General Counsel, NASDAQ OMX, and Nancy Burke-Sanow, Assistant Director, Division of Trading and Markets, Commission on December 22, 2008.

[16] *See* BX Rulebook Proposal, *supra* note 4.

[17] 15 U.S.C. 78f.

general, and with Section 6(b)(5) of the Act,[18] in particular, in that the proposal is designed to prevent fraudulent and manipulative acts and practices, to promote just and equitable principles of trade, to foster cooperation and coordination with persons engaged in regulating, clearing, settling, processing information with respect to, and facilitating transactions in securities, to remove impediments to and perfect the mechanism of a free and open market and a national market system, and, in general, to protect investors and the public interest. The proposed rule change would permit inbound routing of Directed Orders and other orders to BX from its affiliate NES while minimizing the potential for conflicts of interest and informational advantages involved where a member firm is affiliated with an exchange to which it is routing orders.

B. Self-Regulatory Organization's Statement on Burden on Competition

Nasdaq does not believe that the proposed rule change will impose any burden on competition that is not necessary or appropriate in furtherance of the purposes of the Act.

C. Self-Regulatory Organization's Statement on Comments on the Proposed Rule Change Received From Members, Participants or Others

Written comments were neither solicited nor received.

III. Solicitation of Comments

Interested persons are invited to submit written data, views, and arguments concerning the foregoing, including whether the proposed rule change is consistent with the Act. Comments may be submitted by any of the following methods:

Electronic Comments

- Use the Commission's Internet comment form (*http://www.sec.gov/rules/sro.shtml*); or
- Send an e-mail to *rule-comments@sec.gov.* Please include File No. SR–Nasdaq–2008–098 on the subject line.

Paper Comments

- Send paper comments in triplicate to Secretary, Securities and Exchange Commission, 100 F Street, NE., Washington, DC 20549–1090.

All submissions should refer to File Number SR–Nasdaq–2008–098. This file number should be included on the subject line if e-mail is used. To help the Commission process and review your comments more efficiently, please use only one method. The Commission will post all comments on the Commission's Internet Web site (*http://www.sec.gov/rules/sro.shtml*). Copies of the submission, all subsequent amendments, all written statements with respect to the proposed rule change that are filed with the Commission, and all written communications relating to the proposed rule change between the Commission and any person, other than those that may be withheld from the public in accordance with the provisions of 5 U.S.C. 552, will be available for inspection and copying in the Commission's Public Reference Room on official business days between the hours of 10 a.m. and 3 p.m. Copies of such filing also will be available for inspection and copying at the principal office of the Exchange. All comments received will be posted without change; the Commission does not edit personal identifying information from submissions. You should submit only information that you wish to make available publicly. All submissions should refer to File Number SR–Nasdaq–2008–098 and should be submitted on or before January 21, 2009.

IV. Commission's Findings and Order Granting Accelerated Approval of a Proposed Rule Change

The Commission finds that the proposed rule change is consistent with the requirements of the Act and the rules and regulations thereunder applicable to a national securities exchange.[19] In particular, the proposed rule change is consistent with Section 6(b)(5) of the Act,[20] which requires, among other things, that the rules of a national securities exchange be designed to prevent fraudulent and manipulative acts and practices; to promote just and equitable principles of trade; to foster cooperation and coordination with persons engaged in regulating, clearing, settling, processing information with respect to, and facilitating transactions in securities; to remove impediments to and perfect the mechanism of a free and open market and a national market system; and, in general, to protect investors and the public interest; and are not designed to permit unfair discrimination between customers, issuers, brokers, or dealers.

On August 7, 2008, the Commission approved the acquisition of BX (formerly The Boston Stock Exchange, Incorporated) by NASDAQ OMX.[21] In conjunction with that transaction, the Exchange amended its rules to prohibit the routing of Directed Orders [22] to any facility of an exchange that is an affiliate of Nasdaq.[23] This limitation corresponds to one of the conditions proposed by BX at the time it was acquired by NASDAQ OMX to permit its affiliation with NES.[24] NES, a broker-dealer that will become a member of BX, currently provides to Nasdaq members optional routing services to other market centers. NES is owned by NASDAQ OMX, which also owns three registered securities exchanges—Nasdaq, BX, and the PHLX.[25] Thus, NES is an affiliate of each of these exchanges.

BX previously proposed as a condition to its affiliation with NES, that NES would only route orders to BSE that first attempt to access liquidity on Nasdaq. In connection with the resumption of equities trading on BX, BX is now proposing to accept orders routed to it by NES in its capacity as a facility of Nasdaq, including orders that do not first attempt to access liquidity on Nasdaq.[26] In the instant filing, the Exchange proposes to amend Nasdaq Rule 4751 to allow the routing of Directed Orders [27] from Nasdaq to the NASDAQ OMX BX Equities Market. The Exchange is also proposing to amend Nasdaq Rule 4758 to add a requirement that NES establish and maintain procedures and internal controls reasonably designed to adequately restrict the flow of confidential and proprietary information between Nasdaq and its facilities, including NES, and any other entity.

In the past, the Commission has expressed concern that the affiliation of an exchange with one of its members raises potential conflicts of interest, and the potential for unfair competitive

[18] 15 U.S.C. 78f(b)(5).

[19] In approving this proposed rule change, the Commission has considered the proposed rule's impact on efficiency, competition, and capital formation. *See* 15 U.S.C. 78c(f).

[20] 15 U.S.C. 78f(b)(5).

[21] *See supra* note 11.

[22] Nasdaq Rule 4751(f)(9) defines Directed Orders as immediate-or-cancel orders that are directed to an exchange other than Nasdaq without checking the Nasdaq book.

[23] *See* Nasdaq Rule 4751(f)(9). *See also* Securities Exchange Act Release No. 58135, *supra* note 8.

[24] *See* Securities Exchange Act Release No. 58324, *supra* note 11, at notes 117–123 and accompanying text. *See also* Securities Exchange Act Release No. 58135, *supra* note 8.

[25] *See* Securities Exchange Act Release Nos. Release No. 58324, *supra* note 11; and 58179 (July 17, 2008), 73 FR 42874 (July 23, 2008) (order approving NASDAQ OMX's acquisition of the PHLX.)

[26] *See* Securities Exchange Act Release No. 59154 (December 23, 2008) (SR–BSE–2008–48) (order approving the BX Rulebook Filing) (''BX Rulebook Approval Order'').

[27] Pursuant to Nasdaq Rule 4751(f)(9), Nasdaq currently may not route Directed Orders to a facility of an exchange that is an affiliate of Nasdaq.

advantage.[28] Although the Commission continues to be concerned about potential unfair competition and conflicts of interest between an exchange's self-regulatory obligations and its commercial interests when the exchange is affiliated with one of its members, the Commission believes that it is consistent with the Act to permit NES to expand the outbound routing services it provides to Nasdaq, subject to certain conditions.

Nasdaq Rule 4758 imposes certain conditions on NES as the Exchange's outbound order router. For example, NES must: (1) Be a member of a self-regulatory organization unaffiliated with Nasdaq that is its designated examining authority; (2) be regulated as a facility of the Exchange;[29] and (3) not engage in any business other than its outbound router function unless otherwise approved by the Commission. Also, the books, records, premises, officers, agents, directors and employees of NES, as a facility of Nasdaq are deemed to be those of the Exchange for purposes of and subject to oversight pursuant to the Act.[30] In addition, use of NES to route orders from Nasdaq to away market centers is optional,[31] and a Nasdaq member is free to route orders to other market centers through alternative means. Pursuant to the proposal, NES will also establish and maintain procedures and internal controls reasonably designed to restrict the flow of confidential and proprietary information between Nasdaq and its facilities, including NES, and any other entity.[32]

In light of the protections discussed above and contained in Nasdaq Rule 4758, the Commission believes that it is consistent with the Act to permit Nasdaq to expand the availability of the outbound routing services provided by its affiliate, NES.

Nasdaq has asked the Commission to accelerate approval of the proposed rule change concurrent with approval of the BX Rulebook Proposal which establishes protections against possible conflicts of interest as a result of routing by NES to BX.[33] The Commission finds good cause for approving the proposed rule change before the thirtieth day after the date of publication of notice of filing thereof in the **Federal Register**. The Commission notes that Nasdaq's proposal to expand the use of NES as its outbound order routing facility is consistent with prior Commission action.[34] Accordingly, the Commission finds good cause, consistent with Section 19(b)(2) of the Act,[35] to approve the proposed rule change on an accelerated basis.

V. Conclusion

It is therefore ordered, pursuant to Section 19(b)(2) of the Act, that the proposed rule change (SR–NASDAQ–2008–098) is hereby approved on an accelerated basis.

For the Commission, by the Division of Trading and Markets, pursuant to delegated authority.[36]

Florence E. Harmon,

Acting Secretary.

[FR Doc. E8–31130 Filed 12–30–08; 8:45 am]

BILLING CODE 8011–01–P

[28] *See, e.g.*, Securities Exchange Act Release Nos. 58324, *supra* note 11; 58673, (September 29, 2008), 73 FR 57707 (October 3, 2008) (SR–NYSE–2008–60 and SR–Amex–2008–62) (order approving the business combination between NYSE Euronext and NYSE Alternext US LLC); 54170 (July 18, 2006), 71 FR 42149 (July 25, 2006) (SR–NASDAQ–2006–006) (order approving Nasdaq's proposal to adopt Nasdaq Rule 2140, restricting affiliations between Nasdaq and its members); and 53382 (February 27, 2006, 71 FR 11251) (March 6, 2006) (SR–NYSE–2005–77) (order approving the combination of the New York Stock Exchange, Inc. and Archipelago Holdings).

[29] The Commission notes that, as a facility of the Exchange, NES is subject to Exchange oversight, as well as Commission oversight. Further, the Exchange is responsible for filing with the Commission proposed rule changes and fees relating to NES's outbound router function and NES's outbound router function is subject to exchange non-discrimination requirements.

[30] *See* Nasdaq Rule 4758(b)(6). In addition, the books and records of NES, as a facility of the Exchange, are subject at all times to inspection and copying by the Exchange and the Commission. *Id.*

[31] Nasdaq Rule 4758(b)(7).

[32] *See* proposed Nasdaq Rule 4758(b)(8). The Commission notes that this proposed requirement is consistent with the rules for Nasdaq Options Services LLC, which provides outbound routing services for the Nasdaq Options Market, that were previously approved by the Commission. *See* Nasdaq Options Rule Section 11(e). *See also* Securities Exchange Act Release No. 57478 (March 12, 2008), 73 FR 14521 (March 18, 2008) (SR–NASDAQ–2007–004 and SR–NASDAQ–2007–080) (order approving a proposed rule change relating to the establishment and operation of the NASDAQ Options Market).

[33] *See* SR–Nasdaq–2008–098, Item 7. The Commission is also approving today the BX Rulebook Proposal. *See* BX Rulebook Approval Order, *supra* note 26.

[34] *See, e.g.*, Securities Exchange Act Release Nos. 59009 (November 24, 2008), 73 FR 73363 (December 2, 2008) (SR–NYSEALTR–2008–07); 58681, *supra* note 13; and 58680 *supra* note 13.

[35] 15 U.S.C. 78s(b)(2).

[36] 17 CFR 200.30–3(a)(12).

SECURITIES AND EXCHANGE COMMISSION

[Release No. 34–59140; File No. SR–NYSE–2008–130]

Self-Regulatory Organizations; Notice of Filing and Immediate Effectiveness of Proposed Rule Change by New York Stock Exchange LLC To Establish a Trading License Fee for 2009 and Amend Certain Other Floor Fees

December 22, 2008.

Pursuant to Section 19(b)(1)[1] of the Securities Exchange Act of 1934 (the ''Act'')[2] and Rule 19b–4 thereunder,[3] notice is hereby given that, on December 18, 2008, New York Stock Exchange LLC (the ''NYSE'' or the ''Exchange'') filed with the Securities and Exchange Commission (the ''Commission'') the proposed rule change as described in Items I, II, and III below, which Items have been prepared by the self-regulatory organization. The Commission is publishing this notice to solicit comments on the proposed rule change from interested persons.

I. Self-Regulatory Organization's Statement of the Terms of Substance of the Proposed Rule Change

The Exchange proposes to: (i) Amend Exchange Rule 300 (Trading Licenses) to provide that the fee for trading licenses will be set forth on the Exchange's Price List rather than in Rule 300; (ii) amend Rule 300 to provide that trading licenses purchased following the annual offering will be sold for a pro rated portion of the annual fee, rather than at a premium to the annual price; (iii) establish a trading license fee for 2009 of $40,000; (iv) reduce from $5,000 to $1,000 the fee related to the approval of a pre-qualified substitute employee; and (v) eliminate the $1,000 clerk badge fee. The text of the proposed rule change is available on the Exchange's Web site (*http://www.nyse.com*), at the Exchange's Office of the Secretary, and at the Commission's Public Reference Room.

II. Self-Regulatory Organization's Statement of the Purpose of, and Statutory Basis for, the Proposed Rule Change

In its filing with the Commission, the Exchange included statements concerning the purpose of, and basis for, the proposed rule change. The text of these statements may be examined at the places specified in Item IV below. The NYSE has prepared summaries, set forth in Sections A, B, and C below, of

[1] 15 U.S.C. 78s(b)(1).

[2] 15 U.S.C. 78a.

[3] 17 CFR 240.19b–4.

the most significant aspects of such statements.

A. Self-Regulatory Organization's Statement of the Purpose of, and Statutory Basis for, the Proposed Rule Change

1. Purpose

Exchange Rule 300(b) sets forth the fee payable by member organizations buying trading licenses in the annual offering. The Exchange proposes to amend Rule 300(b) to provide that the trading license fee for each year will not be set forth in the rule itself but will rather be established each year by way of an amendment to the Exchange's price list submitted to the Commission as a rule filing under Rule 19b–4.[4] This is consistent with the Exchange's general approach to fees applicable to member organizations, which are typically set forth in the Exchange's price list but not included in the Exchange rules. Rule 300(d) provides that member organizations buying trading licenses after the start of the applicable calendar year are charged $44,000 (a 10 percent premium over the 2008 trading license fee of $40,000), pro rated to reflect the amount of time left in the year. The Exchange proposes to amend Rule 300(d) to provide that additional trading licenses purchased after the annual offering will be sold at the same price as licenses purchased in the annual offering, pro rated to reflect the amount of time remaining in the year. The Exchange proposes to maintain the trading license fee at $40,000 for calendar 2009.

The Exchange currently charges a $5,000 fee with respect to the approval of a pre-qualified substitute employee.[5] This fee is billed to the member organization which is the new employer of (i) any new member or pre-qualified substitute not transferring from another member organization, (ii) any approved member who changes employment and continues as a member with that member organization, or (iii) any pre-qualified substitute who changes employment and continues as a pre-qualified substitute with that member organization. The Exchange proposes to reduce this fee from $5,000 to $1,000 commencing January 1, 2009.

The Exchange currently charges member organizations a $1,000 badge fee for each clerk working on the trading floor. The Exchange proposes to eliminate this fee with effect from January 1, 2009.

2. Statutory Basis

The Exchange believes that the proposed rule change is consistent with the objectives of Section 6[6] of the Act in general and furthers the objectives of Section 6(b)(4)[7] in particular, in that it is designed to provide for the equitable allocation of reasonable dues, fees and other charges among its members and other persons using its facilities. The Exchange believes that the proposal does not constitute an inequitable allocation of dues, fees and other charges as it provides the DMMs appropriate incentives to act as liquidity providers and supports them in performing their central function in the Exchange's market model.

B. Self-Regulatory Organization's Statement on Burden on Competition

The Exchange does not believe that the proposed rule change will impose any burden on competition that is not necessary or appropriate in furtherance of the purposes of the Act.

C. Self-Regulatory Organization's Statement on Comments on the Proposed Rule Change Received From Members, Participants, or Others

Written comments were neither solicited nor received.

III. Date of Effectiveness of the Proposed Rule Change and Timing for Commission Action

The foregoing rule change is effective upon filing pursuant to Section 19(b)(3)(A)[8] of the Act and Rule 19b–4(f)(2)[9] thereunder.

At any time within 60 days of the filing of the proposed rule change, the Commission may summarily abrogate such rule change if it appears to the Commission that such action is necessary or appropriate in the public interest, for the protection of investors, or otherwise in furtherance of the purposes of the Act.

IV. Solicitation of Comments

Interested persons are invited to submit written data, views, and arguments concerning the foregoing, including whether the proposed rule change is consistent with the Act. Comments may be submitted by any of the following methods:

Electronic Comments

- Use the Commission's Internet comment form (*http://www.sec.gov/rules/sro.shtml*); or
- Send an e-mail to *rule-comments@sec.gov.* Please include File Number SR–NYSE–2008–130 on the subject line.

Paper Comments

- Send paper comments in triplicate to Secretary, Securities and Exchange Commission, 100 F Street, NE., Washington, DC 20549–1090.

All submissions should refer to File Number SR–NYSE–2008–130. This file number should be included on the subject line if e-mail is used. To help the Commission process and review your comments more efficiently, please use only one method. The Commission will post all comments on the Commission's Internet Web site (*http://www.sec.gov/rules/sro.shtml*). Copies of the submission, all subsequent amendments, all written statements with respect to the proposed rule change that are filed with the Commission, and all written communications relating to the proposed rule change between the Commission and any person, other than those that may be withheld from the public in accordance with the provisions of 5 U.S.C. 552, will be available for inspection and copying in the Commission's Public Reference Room, on official business days between the hours of 10 a.m. and 3 p.m. Copies of the filing also will be available for inspection and copying at the principal office of the self-regulatory organization. All comments received will be posted without change; the Commission does not edit personal identifying information from submissions. You should submit only information that you wish to make available publicly. All submissions should refer to File Number. SR–NYSE–2008–130 and should be submitted on or before January 21, 2009.

For the Commission, by the Division of Trading and Markets, pursuant to delegated authority.[10]

Florence E. Harmon,

Acting Secretary.

[FR Doc. E8–31049 Filed 12–30–08; 8:45 am]

BILLING CODE 8011–01–P

[4] 17 CFR 240.19b–4.

[5] A pre-qualified substitute employee is an employee of a member organization who has been approved to work on the Exchange trading floor and can be assigned to work on the trading floor at anytime that the member organization has a trading license available for use.

[6] 15 U.S.C. 78f.

[7] 15 U.S.C. 78f(b)(4).

[8] 15 U.S.C. 78s(b)(3)(A).

[9] 17 CFR 240.19b–4(f)(2).

[10] 17 CFR 200.30–3(a)(12).

SECURITIES AND EXCHANGE COMMISSION

[Release No. 34–59139; File No. SR–NYSE–2008–109]

Self-Regulatory Organizations; New York Stock Exchange LLC; Order Approving Proposed Rule Change To Clarify Amendments to ''Other Securities'' Initial Listing Standards

December 22, 2008.

I. Introduction

On October 31, 2008, New York Stock Exchange LLC (''NYSE'' or ''Exchange'') filed with the Securities and Exchange Commission (''Commission'') pursuant to Section 19(b)(1) of the Securities Exchange Act of 1934 (''Act'') [1] and Rule 19b–4 thereunder,[2] a proposed rule change to amend Section 703.19 of the Exchange's Listed Company Manual (the ''Manual''), the Exchange's initial listing standards for ''Other Securities.'' The proposed rule change was published in the **Federal Register** on November 19, 2008.[3] The Commission received no comments on the proposal. This order approves the proposed rule change.

II. Description of the Proposal

The Exchange proposed to amend Section 703.19 of the Manual [4] to state that companies whose securities that are not listed on the Exchange and wish to list securities under Section 703.19 must meet one of the Exchange's financial original listing standards for equity listings, but need not meet any of the other initial listing requirements set forth in Section One of the Manual.

Currently, a company who wishes to list securities on the NYSE but whose securities do not fall under the traditional listing standards for common stock, preferred stock, debt securities, warrants, or under parts of the Manual, may list such securities under Section 703.19 of the Manual. In order to list these securities, they must meet the following criteria. First, if the company currently has securities listed on NYSE, the company must be in good standing.[5] If the company does not have securities listed on NYSE, the company must meet the initial common stock listing standards set forth in Sections 102.01 to 102.03 and 103.01 to 103.05 of the Manual. Second, equity securities must have at least (1) One million securities outstanding; (2) 400 holders; and (3) $4 million in market value and debt securities must have a minimum public market value of $4 million.

The Exchange proposes to change the requirement for companies that do not have securities listed on NYSE to meet the Exchange's initial common stock listing standards as set forth in Sections 102.01 to 102.03 and 103.01 to 103.05 of the Manual. As proposed, such companies must meet one of the financial standards in Section 102.01C and for foreign companies, Section 103.01B.

The Exchange also proposes to remove the sub-heading ''Earnings/Net Tangible Assets'' from the second paragraph of Section 703.19.

III. Discussion and Commission's Findings

The Commission has carefully reviewed the proposed rule change and finds that it is consistent with the requirements of Section 6 of the Act [6] and the rules and regulations thereunder applicable to a national securities exchange.[7] In particular, the Commission finds that the proposal is consistent with Section 6(b)(5) of the Act,[8] which requires, among other things, that the Exchange's rules be designed to promote just and equitable principles of trade, to remove impediments to and perfect the mechanism of a free and open market and a national market system, and, in general, to protect investors and the public interest.

The development and enforcement of adequate standards governing the initial listing of securities on an exchange is an activity of critical importance to financial markets and the investing public. Listing standards, among other things, serve as a means for an exchange to screen issuers and to provide listed status only to bona fide companies that have sufficient public float, investor base, and trading interest to provide the depth and liquidity necessary to promote fair and orderly markets. Adequate standards are especially important given the expectations of investors regarding exchange trading and the imprimatur of listing on a particular market.

Under the proposal, companies with securities that are not listed on NYSE and who wish to list securities under Section 703.19 must now meet one of four financial listing standards under Section 102.01C of the Manual.[9] Under the proposal, companies who are foreign private issuers must meet one of three financial listing standards under Section 103.01B of the Manual.[10] The Exchange represented that it has not imposed the other standards in Sections 102.01 to 102.03 or Sections 103.01 to 103.05, as the Exchange has applied these other standards to the common stock.

The Commission notes that, as proposed, the numerical listing standards under proposed Section 703.19 would be similar to the numerical listing standards for ''other securities'' on other exchanges.[11] The Commission also notes that the proposed change would apply only for companies whose securities are not otherwise listed on the Exchange. In addition, the Commission notes that Section 703.19 currently provides public float and distribution listing standards.

Furthermore, the Commission believes that the proposal to remove the obsolete sub-heading ''Earnings/Net Tangible Assets'' from Section 703.19 should eliminate any potential confusion.

The Commission believes the proposed rule change is reasonable and should continue to provide for the listing of securities with sufficient depth and liquidity to maintain fair and orderly markets. Accordingly, the Commission believes that the changes are consistent with the requirements of the Act.

---

[1] 15 U.S.C. 78s(b)(1).

[2] 17 CFR 240.19b–4.

[3] *See* Securities Exchange Act Release No. 58928 (November 10, 2008), 73 FR 69706 (''Notice'').

[4] Section 703.19 was adopted to provide the Exchange with the flexibility to list securities that could not be readily categorized under the Exchange's traditional listing standards for common and preferred stocks, debt securities and warrants. Section 703.19 was intended to provide flexibility to enable the Exchange to consider the listing of new securities on a case-by-case basis, in light of the suitability of the issue for auction market trading. Section 703.19 is not intended to accommodate the listing of securities that raise significant new regulatory issues, which would require a separate filing with the Commission. *See* Securities Exchange Act Release No. 28217 (July 18, 1990) 55 FR 30056 (July 24, 1990) (SR–NYSE–90–30).

[5] See Section 703.19 of the Manual. If the company is an affiliate of a NYSE-listed company, the NYSE-listed company must be in good standing.

[6] 15 U.S.C. 78f.

[7] In approving this proposed rule change the Commission has considered the proposed rule's impact on efficiency, competition, and capital formation. *See* 15 U.S.C. 78c(f).

[8] 15 U.S.C. 78f(b)(5).

[9] Section 102.01C of the Manual lists four different financial standards for companies to qualify for listing on the Exchange: (1) Earnings Test; (2) Valuation/Revenue Test; (3) Affiliated Company Test; or (4) Assets and Equity Test.

[10] Section 103.05B of the Manual lists three different financial standards for companies who are foreign private issuers to qualify for listing on the Exchange: (1) Earnings Test; (2) Valuation/Revenue Test; or (3) Affiliated Company Test.

[11] *See e.g.*, Nasdaq Marketplace Rule 4420(f), Section 107 of the Amex Company Guide, and NYSE Arca Rule 5.2(j)(1).

III. Conclusion

It is therefore ordered, pursuant to Section 19(b)(2) of the Act,[12] that the proposed rule change (SR–NYSE–2008–109) be, and it hereby is, approved.

For the Commission, by the Division of Trading and Markets, pursuant to delegated authority.[13]

Florence E. Harmon,

Acting Secretary.

[FR Doc. E8–31052 Filed 12–30–08; 8:45 am]

BILLING CODE 8011–01–P

SECURITIES AND EXCHANGE COMMISSION

[Release No. 34–59143; File No. SR–NYSE–2008–135]

Self-Regulatory Organizations; Notice of Filing and Immediate Effectiveness of Proposed Rule Change by New York Stock Exchange LLC To Extend to March 27, 2009, the Operative Date of New York Stock Exchange Rule 2 Requirement That NYSE-Only Member Organizations Apply for and Be Approved as a Member of the Financial Industry Regulatory Authority, Inc.

December 22, 2008.

Pursuant to Section 19(b)(1)[1] of the Securities Exchange Act of 1934 (the ''Act'')[2] and Rule 19b–4 thereunder,[3] notice is hereby given that, on December 22, 2008, New York Stock Exchange LLC (''NYSE'' or the ''Exchange'') filed with the Securities and Exchange Commission (the ''Commission'') the proposed rule change as described in Items I, II, and III below, which Items have been prepared by the self-regulatory organization. The Commission is publishing this notice to solicit comments on the proposed rule change from interested persons.

I. Self-Regulatory Organization's Statement of the Terms of Substance of the Proposed Rule Change

The Exchange proposes to extend to March 27, 2009, the operative date of New York Stock Exchange (''NYSE'' or the ''Exchange'') Rule 2 requirement that NYSE-only member organizations apply for and be approved as a member of the Financial Industry Regulatory Authority, Inc. (''FINRA'').

II. Self-Regulatory Organization's Statement of the Purpose of, and Statutory Basis for, the Proposed Rule Change

In its filing with the Commission, the self-regulatory organization included statements concerning the purpose of, and basis for, the proposed rule change and discussed any comments it received on the proposed rule change. The text of those statements may be examined at the places specified in Item IV below. The Exchange has prepared summaries, set forth in Sections A, B, and C below, of the most significant aspects of such statements.

A. Self-Regulatory Organization's Statement of the Purpose of, and Statutory Basis for, the Proposed Rule Change

1. Purpose

The Exchange is proposing to extend to March 27, 2009, the grace period for NYSE-only member organizations to apply for and be approved as a FINRA member, as required by NYSE Rule 2.

In connection with the consolidation of NASD and NYSE Regulation member firm regulation operations into FINRA, which closed on July 30, 2007, the Exchange amended NYSE Rule 2 to require NYSE member organizations to also be FINRA members.[4] In connection with those rule changes, the Commission approved a 60-day grace period within which NYSE-only member organizations must apply for and be approved for FINRA membership. In that rule filing, NYSE-only member organizations were defined as those member organizations that were not NASD members as of the date of the closing of the FINRA transaction. This grace period began on October 12, 2007, the date of Commission approval of the Exchange's rule filing. In furtherance of the consolidation, FINRA adopted NASD IM–1013–1 to enable eligible NYSE member organizations to become FINRA members though an expedited process (the ''FINRA Waive-in application process'').[5]

At the close of the 60-day grace period, all but two of the former NYSE-only member organizations had applied for and been approved as FINRA members. On December 12, 2007, the Exchange filed for an extension of the grace period to June 30, 2008 for those two firms.[6] On June 30, 2008, the Exchange filed for another extension of the grace period to December 31, 2008.[7] In that filing, the Exchange noted that those two firms had unique member qualification issues and were ineligible to participate in the FINRA Waive-in application process. As of December 19, 2008, one of those two firms has been approved as a FINRA member. With respect to the other firm, because the Exchange is working on a rule filing to amend Rule 2 to permit a broker dealer to be an NYSE member organization without a FINRA membership, the Exchange believes that the grace period should be further extended so that the remaining firm does not have to re-apply for Exchange membership if the proposed change to Rule 2 is approved. Accordingly, the NYSE proposes to extend the grace period to March 27, 2009 for the firm that was an NYSE member organization as of July 30, 2007, but not a FINRA member.

2. Statutory Basis

The basis under the Act for this proposed rule change is the requirement under Section 6(b)(5)[8] that an Exchange have rules that are designed to promote just and equitable principles of trade, to remove impediments to and perfect the mechanism of a free and open market and a national market system and, in general, to protect investors and the public interest.

B. Self-Regulatory Organization's Statement on Burden on Competition

The Exchange does not believe that the proposed rule change will impose any burden on competition that is not necessary or appropriate in furtherance of the purposes of the Act.

C. Self-Regulatory Organization's Statement on Comments on the Proposed Rule Change Received From Members, Participants, or Others

No written comments were solicited or received with respect to the proposed rule change.

III. Date of Effectiveness of the Proposed Rule Change and Timing for Commission Action

The foregoing rule change is being filed for immediate effectiveness pursuant to Section 19(b)(3)(A)[9] of the

---

[12] 15 U.S.C. 78s(b)(2).

[13] 17 CFR 200.30–3(a)(12).

[1] 15 U.S.C. 78s(b)(1).

[2] 15 U.S.C. 78a.

[3] 17 CFR 240.19b–4.

[4] *See* Securities Exchange Act Release No. 34–56654 (Oct. 12, 2007), 72 FR 59129 (Oct. 18, 2007) (SR–NYSE–2007–67).

[5] *See* Securities Exchange Act Release No. 34–56653 (Oct. 12, 2007), 72 FR 59127 (Oct. 18, 2007) (SR–NASD–2007–56).

[6] *See* Securities Exchange Act Release No. 34–56953 (Dec. 12, 2007), 72 FR 71990 (Dec. 19, 2007) (SR–NYSE–2007–115).

[7] *See* Securities Exchange Act Release No. 34–58096 (July 3, 2008), 73 FR 39764 (July 10, 2008) (SR–NYSE–2008–54).

[8] 15 U.S.C. 78f(b)(5).

[9] 15 U.S.C. 78s(b)(3)(A).

Act and Rule 19b–4(f)(3) [10] promulgated thereunder. The proposed rule change goes solely to the administration of the self-regulatory organization in that it is not a substantive change to NYSE Rule 2 and simply extends a pre-existing grace period.

IV. Solicitation of Comments

Interested persons are invited to submit written data, views, and arguments concerning the foregoing, including whether the proposed rule change is consistent with the Act. Comments may be submitted by any of the following methods:

Electronic Comments

- Use the Commission's Internet comment form (*http://www.sec.gov/rules/sro.shtml*); or
- Send an e-mail to *rule-comments@sec.gov.* Please include File Number SR–NYSE–2008–135 on the subject line.

Paper Comments

- Send paper comments in triplicate to Secretary, Securities and Exchange Commission, 100 F Street, NE., Washington, DC 20549–1090.

All submissions should refer to File Number SR–NYSE–2008–135. This file number should be included on the subject line if e-mail is used. To help the Commission process and review your comments more efficiently, please use only one method. The Commission will post all comments on the Commission's Internet Web site (*http://www.sec.gov/rules/sro.shtml*). Copies of the submission, all subsequent amendments, all written statements with respect to the proposed rule change that are filed with the Commission, and all written communications relating to the proposed rule change between the Commission and any person, other than those that may be withheld from the public in accordance with the provisions of 5 U.S.C. 552, will be available for inspection and copying in the Commission's Public Reference Room, on official business days between the hours of 10 a.m. and 3 p.m. Copies of the filing also will be available for inspection and copying at the principal office of the self-regulatory organization. All comments received will be posted without change; the Commission does not edit personal identifying information from submissions. You should submit only information that you wish to make available publicly. All submissions should refer to File Number. SR–NYSE–2008–135 and should be submitted on or before January 21, 2009.

For the Commission, by the Division of Trading and Markets, pursuant to delegated authority.[11]

Florence E. Harmon,

Acting Secretary.

[FR Doc. E8–31100 Filed 12–30–08; 8:45 am]

BILLING CODE 8011–01–P

[10] 17 CFR 240.19b–4(f)(3).

[11] 17 CFR 200.30–3(a)(12).

SECURITIES AND EXCHANGE COMMISSION

[Release No. 34–59145; File No. SR–NYSE–2008–101]

Self-Regulatory Organizations; New York Stock Exchange LLC; Notice of Filing of Proposed Rule Change To Establish Its New Risk Management Gateway Service

December 22, 2008.

Pursuant to section 19(b)(1) of the Securities Exchange Act of 1934 (''Act'') [1] and Rule 19b–4 thereunder,[2] notice is hereby given that on December 12, 2008, the New York Stock Exchange LLC (''NYSE'' or ''Exchange'') filed with the Securities and Exchange Commission (''Commission'') the proposed rule change as described in Items I, II, and III below, which Items have been prepared by the Exchange. The Commission is publishing this notice to solicit comments on the proposed rule change from interested persons.

I. Self-Regulatory Organization's Statement of the Terms of Substance of the Proposed Rule Change

The Exchange proposes to establish its new Risk Management Gateway (''RMG'') service.

II. Self-Regulatory Organization's Statement of the Purpose of, and Statutory Basis for, the Proposed Rule Change

In its filing with the Commission, NYSE included statements concerning the purpose of, and basis for, the proposed rule change and discussed any comments it received on the proposed rule change. The text of these statements may be examined at the places specified in Item IV below. NYSE has prepared summaries, set forth in Sections A, B, and C below, of the most significant aspects of such statements.

[1] 15 U.S.C. 78s(b)(1).

[2] 17 CFR 240.19b–4.

A. Self-Regulatory Organization's Statement of the Purpose of, and Statutory Basis for, the Proposed Rule Change

1. Purpose

The Exchange proposes to offer, through its wholly-owned subsidiary NYSE Euronext Advanced Trading Solutions, Inc., the Risk Management Gateway (''RMG'') service to NYSE members and member organizations. NYSE Transact Tools, Inc., a division of the NYSE Euronext Advanced Trading Solutions Group (''NYXATS''), owns RMG.[3]

Background

NYSE Rule 54 provides that only members are permitted to ''* * * make or accept bids or offers, consummate transactions, or otherwise transact business on the Floor for any security admitted to dealings on the [Exchange] * * *.'' [4] However, the Exchange permits NYSE members and member organizations (a ''Sponsoring Member Organization'') to sponsor access to Exchange systems by non-member firms or customers (''Sponsored Participants'').

Prior to August 2008, requirements related to sponsored access on the Exchange were included in certain NYSE rules that govern specific Exchange products or facilities: NYSE MatchPoint[SM] [5] and NYSE Bonds[SM].[6] However, in August, the Exchange submitted a rule change to the SEC to amend NYSE Rule 123B (Exchange Automated Order Routing System) [7] in order to create a general sponsored access rule that permits a Sponsoring Member Organization to sponsor a Sponsored Participant's access to Exchange systems for the Sponsored Participant's entry and execution of orders on the Exchange. The proposed amendments to NYSE Rule 123B reflect the Exchange's general policy regarding sponsored access to the Exchange, though they do not govern NYSE MatchPoint or NYSE Bonds.[8] NYSE

[3] NYXATS will similarly offer the same services to NYSE Alternext via a separate filing SR–NYSEALTR–2008–12.

[4] *See* also NYSE Rule 2.

[5] *See* NYSE Rule 1500.

[6] *See* NYSE Rule 86.

[7] *See* Securities Exchange Act Release No. 58429 (August 27, 2008), 73 FR 51676 (September 4, 2008) (SR–NYSE–2008–71) (initial filing to create NYSE's general sponsored access rule); *see also,* Securities Exchange Act Release No. 58758 (October 8, 2008), 73 FR 62352 (October 20, 2008) (SR–NYSE–2008–100) (filing to conform NYSE's sponsored access rule to current industry standards).

[8] That is, currently, the provisions of NYSE Rule 123B do not apply to NYSE Rules 1500 and 86 as those rules independently contain provisions

Arca, Inc. and other market centers similarly permit sponsored access to their trading systems.

RMG

Traditionally, the customers of a member or member organization gave orders to the member or member organization and the member or member organization then submitted those orders to the Exchange on behalf of the customer. By means of sponsored access, a member or member organization will allow its customers to enter orders directly into the trading systems of the Exchange as Sponsored Participants, without the Sponsoring Member Organization acting as an intermediary.

To facilitate the ability of Sponsoring Member Organizations to monitor and oversee the sponsored access activity of their Sponsored Participants, NYXATS will offer an order-verification service to Sponsoring Member Organizations. This service will act as a risk filter by causing the orders of Sponsored Participants to pass through RMG prior to entering the Exchange's trading systems for execution. When a Sponsored Participant's order passes through RMG, RMG software determines whether the order complies with order criteria that the Sponsoring Member Organization has established for that Sponsored Participant. The order criteria pertain to such matters as the size of the order (per order or daily quantity limits) or the credit limit (per order or daily value) that the Sponsoring Member Organization has established for the Sponsored Participant. Additional risk filters may also be selected by the Sponsoring Member Organization relating to specific symbols or end users.

If the order is consistent with the parameters set by the Sponsoring Member Organization, then RMG allows the order to continue along its path to the Exchange's trading systems. If the order falls outside of those parameters, then RMG returns the order to the Sponsored Participant. RMG will only return an order to the Sponsored Participant when the order fails to comply with the criteria set by the Sponsoring Member Organization.

RMG software interacts with orders only prior to the orders' entry into the Exchange's trading system for execution. RMG does not have order execution or trade reporting capabilities (though it will allow a Sponsoring Member Organization to monitor the orders of its Sponsored Participants). RMG maintains a record of all messages relating to Sponsored Participants' transactions and supplies a copy of such messages to the applicable Sponsoring Member Organization.

The Sponsoring Member Organization, and not RMG, will have full responsibility for ensuring that Sponsored Participants' sponsored access to the Exchange complies with the Exchange's sponsored access rules. The use of RMG by a Member Organization does not automatically constitute compliance with Exchange rules.

NYXATS will host RMG software on NYXATS' infrastructure. After passing through RMG software, each order will enter the NYSE Common Customer Gateway (CCG) for connectivity to the Exchange's matching engine. In the future NYXATS may integrate RMG into the NYSE CCG for more direct access to the Exchange's matching engine.

The Exchange does not require Sponsoring Member Organizations to use RMG (even when it is integrated into NYSE CCG in the future). Sponsoring Member Organizations are free to use a competing risk-management service or to use none at all. The Exchange will not provide preferential treatment to Sponsoring Member Organizations using RMG.

The Exchange proposes to make RMG available to its members and member organizations pursuant to contractual arrangements. The Exchange believes that RMG will offer its members and member organizations another option in the efficient risk management of its Sponsored Participant's access to the NYSE.

2. Statutory Basis

The basis under the Act for this proposed rule change is the requirement under section 6(b)(5) [9] that an Exchange have rules that are designed to promote just and equitable principles of trade, to remove impediments to and perfect the mechanism of a free and open market and a national market system and, in general, to protect investors and the public interest. The proposed rule change also is designed to support the principles of section 11A(a)(1) [10] in that it seeks to assure economically efficient execution of securities transactions, make it practicable for brokers to execute investors' orders in the best market and provide an opportunity for investors' orders to be executed without the participation of a dealer. The Exchange believes that RMG is consistent with all the aforementioned principles because it fosters competition by providing another option in the efficient risk management of trading on the Exchange without the participation of a dealer.

B. Self-Regulatory Organization's Statement on Burden on Competition

The Exchange does not believe that the proposed rule change will impose any burden on competition that is not necessary or appropriate in furtherance of the purposes of the Act.

C. Self-Regulatory Organization's Statement on Comments on the Proposed Rule Change Received From Members, Participants, or Others

No written comments were solicited or received with respect to the proposed rule change.

III. Date of Effectiveness of the Proposed Rule Change and Timing for Commission Action

Within 35 days of the date of publication of this notice in the **Federal Register** or within such longer period (i) as the Commission may designate up to 90 days of such date if it finds such longer period to be appropriate and publishes its reasons for so finding or (ii) as to which the Exchange consents, the Commission will:

(A) By order approve the proposed rule change, or

(B) Institute proceedings to determine whether the proposed rule change should be disapproved.

IV. Solicitation of Comments

Interested persons are invited to submit written data, views, and arguments concerning the foregoing, including whether the proposed rule change is consistent with the Act. Comments may be submitted by any of the following methods:

Electronic Comments

- Use the Commission's Internet comment form (*http://www.sec.gov/rules/sro.shtml*); or
- Send an e-mail to *rule-comments@sec.gov*. Please include File No. SR–NYSE–2008–101 on the subject line.

Paper Comments

- Send paper comments in triplicate to Secretary, Securities and Exchange Commission, Station Place, 100 F Street, NE., Washington, DC 20549–1090.

All submissions should refer to File Number SR–NYSE–2008–101. This file number should be included on the subject line if e-mail is used. To help the Commission process and review your comments more efficiently, please use

related to how a user gains sponsored access to the NYSE MatchPoint and NYSE Bonds systems.

[9] 15 U.S.C. 78f(b)(5).

[10] 15 U.S.C. 78k–1(a)(1).

only one method. The Commission will post all comments on the Commission's Internet Web site (*http://www.sec.gov/rules/sro.shtml*). Copies of the submission, all subsequent amendments, all written statements with respect to the proposed rule change that are filed with the Commission, and all written communications relating to the proposed rule change between the Commission and any person, other than those that may be withheld from the public in accordance with the provisions of 5 U.S.C. 552, will be available for inspection and copying in the Commission's Public Reference Room, on official business days between the hours of 10 a.m. and 3 p.m. Copies of such filing also will be available for inspection and copying at the principal office of the Exchange. All comments received will be posted without change; the Commission does not edit personal identifying information from submissions. You should submit only information that you wish to make available publicly. All submissions should refer to File Number SR–NYSE–2008–101 and should be submitted on or before January 21, 2009.

For the Commission, by the Division of Trading and Markets, pursuant to delegated authority.[11]

Florence E. Harmon,

Acting Secretary.

[FR Doc. E8–31102 Filed 12–30–08; 8:45 am]

BILLING CODE 8011–01–P

SECURITIES AND EXCHANGE COMMISSION

[Release No. 34–59142; File No. SR–NYSEALTR–2008–14]

Self-Regulatory Organizations; NYSE Alternext US LLC; Notice of Filing of Proposed Rule Change Amending Rules Governing the Trading of Listed Options on NYSE Amex

December 22, 2008.

Pursuant to Section 19(b)(1) of the Securities Exchange Act of 1934 (''Act'')[1] and Rule 19b–4 thereunder,[2] notice is hereby given that on December 19, 2008, NYSE Alternext US LLC (''NYSE Alternext'', ''NYSE Amex Options'', ''NYSE Amex'', or the ''Exchange'') filed with the Securities and Exchange Commission (''Commission'') the proposed rule change as described in Items I, II, and III below, which Items have been prepared by the Exchange. The Commission is publishing this notice to solicit comments on the proposed rule change from interested persons.

I. Self-Regulatory Organization's Statement of the Terms of Substance of the Proposed Rule Change

The Exchange proposes to amend its rules governing the trading of listed options on NYSE Amex. With this filing, the Exchange proposes to a) adopt new rules for the implementation of a new trading platform for options, NYSE Amex System (''System'') and (b) govern open outcry trading at the Exchange's new location at 11 Wall Street, New York, NY. The proposed new rule set text is designated Section 900NY, and is shown in the Exhibit 5.

The text of the proposed rule change is available on the Exchange's Web site at *http://www.nyse.com,* at the Exchange's principal office, and at the Commission's Public Reference Room. The text of Exhibit 5 is also available on the Commission's Web site (*http://www.sec.gov/rules/sro.shtml*).

II. Self-Regulatory Organization's Statement of the Purpose of, and Statutory Basis for, the Proposed Rule Change

In its filing with the Commission, the Exchange included statements concerning the purpose of, and basis for, the proposed rule change and discussed any comments it received on the proposed rule change. The text of those statements may be examined at the places specified in Item IV below. The Exchange has prepared summaries, set forth in Sections A, B, and C below, of the most significant parts of such statements.

A. Self-Regulatory Organization's Statement of the Purpose of, and the Statutory Basis for, the Proposed Rule Change

1. Purpose

The Exchange proposes to introduce a modern electronic trading platform to support options trading, and in addition, proposes to update and reorganize open outcry trading at the time of the migration to the new platform and the move to a new Options Trading Floor at 11 Wall Street, New York, NY. The new rule set is proposed as Section 900NY.

Rule Section 900NY will replace certain existing NYSE Alternext Rules. These are, under General Rules, Rule 1, Hours of Business; Rule 2, Visitors; Rule 21, Appointment of the Senior Supervisory Officer, Senior Floor Officials, Exchange Officials and Floor Officials; Rule 21, Authority of Floor Officials; Rule 27A, Allocation of Options; Rule 170, Registration and Functions of Specialists. Under Trading of Options Contracts, the superseded Rules are, in Section 1, Rule 900, Applicability, Definitions and References; in Section 2, Rule 918, Trading Rotations, Halts, and Suspensions; in Section 3, Rule 933, Automatic Execution of Options Orders; Rule 934, Limitation on Orders; Rule 936, Cancellation and Adjustment of Equity Options Transactions; in Section 4, Rule 941, Operation of the Linkage; Rule 942, Order Protection; Rule 943, Locked Markets; Rule 944, Limitation on Principal Order Access.

Additionally, Section 900NY will replace, in Section 5—Floor Rules Applicable to Options, Rule 950, Rules of General Applicability; Rule 951, Premium Bids and Offers; Rule 952, Minimum Price Variations; Rule 953, Acceptance of Bid or Offer; Rule 954, Units of Trading; Rule 955, Floor Reports of Exchange Options Transactions; Rule 956, Open Orders on ''Ex Date''; Rule 957, Accounts, Orders and Records of Registered Traders, Designated NYSE Alternext Remote Traders, Specialists and Associated Persons; Rule 958, Options Transactions of Registered Traders; Rule 958A, Application of the Firm Quote Rule, Rule 959, Accommodation Transactions; in Section 9, Rule 992, Exchange Options Market Data System; in Section 11—Stock Index Options, Rule 918C, Trading Rotations, Halts and Suspensions; and in ANTE Rules, all Rules (Rule 900–ANTE through Rule 997–ANTE).

These Rules will be deleted in a separate filing.

Various provisions contained in the proposed rules define and describe the use of a Routing Broker. A full description of the relationship between the Exchange and the Routing Broker will be submitted in a separate filing.

NYSE Amex proposes to establish rules for NYSE Amex System, a fully automated trading system for standardized equity and index options intended to replace the Exchange's current options trading platform, ANTE. The System will provide automatic order execution capabilities in the options securities listed and traded on NYSE Amex. Market Makers will be able to stream quotes to the System from on the Trading Floor or remotely. The proposed NYSE Amex System is an electronic market structure which encompasses customer priority while essentially allowing market makers and non customers to compete on a ''size pro rata'' basis, and will be available for the entry and execution of quotes and

---

[11] 17 CFR 200.30–3(a)(12).

[1] 15 U.S.C. 78s(b)(1).

[2] 17 CFR 240.19b–4.

orders to ATP Holders. Participation entitlements are reserved for Specialists, e-Specialists, and Directed Order Market Makers. The rules governing Specialists and size pro rata trade allocation are substantially based on rules which had been approved for the Pacific Exchange and its PCX Plus Platform; [3] additional rules regarding e-Specialists are based on approved rules of the Chicago Board Options Exchange; [4] while rules outlining entitlements of Directed Order Market Makers are based on the rules of the NASDAQ OMX PHLX, Inc.[5]

NYSE Alternext proposes to issue Amex Trading Permits (''ATPs''), as defined in proposed Rule 900.2NY(4), for effecting approved securities transaction on the Exchange's Trading Facilities. NYSE Alternext Rules 40, 350, 353, 353A, 358, 358A, 359, 359A, and 359B are being amended to reflect the change from 86 Trinity Permits to Amex Trading Permits. Current 86 Trinity Permits will be easily converted to Amex Trading Permits with a simple conversion form submitted to the Exchange. No material change is being made to these Rules, although some outdated provisions, such as the requirement for a medical examination, are being removed. The Exchange is also eliminating the concept of ''nominee''.

Access to the NYSE Amex System and business on the Trading Floor is limited to Amex Trading Permit Holders (''ATP Holders''), as defined in proposed Rule 900.2NY(5). ATP Holders are natural persons, sole proprietorships, partnerships, corporations, limited liability companies, or other organizations that have been issued an ATP. References in the Rules of NYSE Alternext to ''member,'' ''member organization,'' and ''86 Trinity Permit Holder'' should be deemed to be references to ATP Holders. In addition, within Rule Section 900NY, (specifically Rules 920NY–928NY) are rules which describe Market Makers, Specialists, and electronic Specialists, and their respective rights and obligations. These are similar to NYSE Arca rules 6.32–6.40.

In connection with the implementation of the System, NYSE Amex proposes to adopt definitions applicable to activity on the System. The most significant of the proposed definitions are as follows:

Proposed NYSE Amex Rule 900.2NY(44). NOW Recipients. As described further below, NYSE Amex proposes to add ''NOW Order'' as a new order type. Users will be permitted to designate orders entered on the System as ''NOW Orders.'' NOW Orders are limit orders that are to be executed in whole or in part on the System. Any portion of such orders not executed on the System will be routed to one or more ''NOW Recipients'' for immediate execution. ''NOW Recipients'' include any Market Center (1) with which NYSE Amex maintains an electronic linkage, and (2) that provides instantaneous responses to NOW Orders routed from the System. NYSE Amex will designate those Market Centers that qualify as NOW Recipients and periodically publish such information via its Web site. Any portion of a NOW Order not immediately executed by the NOW Recipient will be cancelled. If a NOW Order is not marketable when it is submitted to the System, it will be cancelled.

Proposed NYSE Amex Rule 900.3NY. In addition to certain existing order types (e.g., Limit Orders, Market Orders), NYSE Amex is proposing to add several new order types available for entry on the System. These include the following:

Proposed NYSE Amex Rule 900.3NY(c). Inside Limit Order. An ''Inside Limit Order'' is a Limit Order, which, if routed away pursuant to Rule 964NY, will be routed to the market participant with the best displayed price. Any unfilled portion of the order will not be routed to the next best price level until all quotes at the current best bid or offer are exhausted. If the order is no longer marketable it will be ranked in the Consolidated Book pursuant to Rule 964NY.

Proposed NYSE Amex Rule 900.3NY(d). Working Order. Working Orders consist of several existing order types (*i.e.*, All-or-None Orders, Stop Order) as well as several new order types (*i.e.*, Reserve Orders, Stock Contingency Orders, Tracking Orders). Working orders are maintained in the Consolidated Book Working Order Process, are not disseminated on the System and are executed in accordance with NYSE Amex Rule 964NY. A Working Order is any order that has a conditional or undisplayed price and/or size designated as a ''Working Order'' by NYSE Amex, including, without limitation:

(1) *Reserve Order.* A limit order with a portion of the size displayed (''display size'') and with a reserve portion of the size (''reserve size'') that is not displayed on the System.

(2) *All-or-None Order (''AON Order'').* A Market or Limit Order that is to be executed in its entirety or not at all.

(3) *Stop Order.* A Stop Order is an order that becomes a Market Order when the market for a particular option contract reaches a specified price. A Stop Order to buy becomes a Market Order when the option contract trades at or above the stop price on the System or another Market Center or when the NYSE Amex bid is quoted at or above the stop price. A Stop Order to sell becomes a Market Order when the option contract trades at or below the stop price on the System or another Market Center or when the NYSE Amex offer is quoted at or below the stop price. Stop Orders (including Stop Limit Orders) shall not have standing in any order process in the Consolidated Book and shall not be displayed.

(4) *Stop Limit Order.* A Stop Limit Order is an order that becomes a Limit Order when the market for a particular option contract reaches a specified price. A Stop Limit Order to buy becomes a Limit Order when the option contract trades at or above the stop price on the System or another Market Center or when the NYSE Amex bid is quoted at or above the stop price. A Stop Limit Order to sell becomes a Limit Order when the option contract trades at or below the stop price on the System or another Market Center or when the NYSE Amex offer is quoted at or below the stop price.

(5) *Stock Contingency Order.* An option order the execution of which is contingent upon the last sale price as specified by the User of the underlying stock traded at the primary marketplace.

(6) *Tracking Order.* A Tracking Order is an undisplayed limit order that is eligible for execution in the Working Order Process against orders equal to or less than the size of the Tracking Order. While Tracking Orders are ranked at their limit price, they are only eligible for execution at a price that matches the NBBO.

For instance, the NBBO market in a series is 2.05–2.15, with a 2.10 Tracking Order to buy 10 contracts, but the NYSE Amex displayed bid is 2.00. An order is received to sell 6 contracts at 2.05; this order will be matched against the 2.10 buy Tracking Order at a price of 2.05, matching the NBBO.

Similarly, with the same initial scenario, a second Tracking Order to buy 20 contracts paying 2.05 is placed in the Consolidated Book. An order is received to sell 15 contracts at 2.05. This order is matched against the second Tracking Order, since it outsizes the first Tracking Order. It will be executed at 2.05, the NBBO price.

If a Tracking Order is executed but not exhausted, the remaining portion of the order shall be cancelled, without

[3] *See* SR–PCX–2003–36, Securities Exchange Act Release No. 47838.

[4] *See* CBOE Rules 8.87 and 8.92–8.94.

[5] *See* PHLX Rule 1080(1).

routing the order to another market center or market participant. A Tracking Order shall not trade-through the NBBO.

Proposed NYSE Amex Rule 900.3NY(o). NOW Order. A ''NOW Order'' is a Limit Order that is to be executed in whole or in part on the System, and the portion not so executed will be routed pursuant to Rule 964NY only to one or more NOW Recipients for immediate execution as soon as the order is received by the NOW Recipient. Any portion not immediately executed by the NOW Recipient will be cancelled. If a NOW Order is not marketable when it is submitted to NYSE Arca System, it will be cancelled.

Proposed NYSE Amex Rule 900.3NY(p). PNP Order. A ''PNP Order'' (Post No Preference) is a Limit Order to buy or sell that is to be executed in whole or in part on NYSE Amex, and the portion not so executed is to be ranked in the Consolidated Book, without routing any portion of the order to another market center; provided, however, NYSE Amex shall cancel a PNP Order that would lock or cross the NBBO.

Proposed NYSE Amex Rule 902NY. NYSE Amex is proposing NYSE Amex Rule 902NY to govern Access and Conduct on the Trading Floor at its new location at 11 Wall Street. Although the Options Trading Floor will be physically separated from the New York Stock Exchange and NYSE Alternext equity trading floor, the floors will be managed and overseen by combined NYSE Euronext employees, and the standards of dress and conduct for the Options Floor will be the same as the standards for the equity floor. Rule 902NY also describes additional standards of dress and conduct that will apply to the Options Floor, consistent with standards for the NYSE Arca Options Trading Floor.[6] ATP Holders on the Trading Floor will be either Market Makers (including Specialists) or Floor Brokers.

The Exchange currently has four general classifications of Market Maker: Specialist, Registered Options Trader (''ROT''), Supplemental Registered Options Traders (''SROT''), and Remote Registered Options Trader (''RROT''). Under the proposed new Rules, these will remain essentially the same, although ROTs and SROTs will be combined into one classification as Floor Market Maker. RROTs will become Remote Market Makers.

There will be no limit to the number of Remote Market Makers, and no limit to the number of Floor Market Makers. The only significant change to the operations of Floor Market Makers is that the ''join quote'' mechanism described in Rule 958–ANTE (Options Transactions of Registered Options Traders and Supplemental Registered Options Traders and Remote Registered Options Traders) will not be available on the new System, and each Floor Market Maker will be required to submit quotes though their own proprietary quoting device.

Proposed NYSE Amex Rule 902.1NY. Proposed NYSE Amex Rule 902.1NY will govern access to the System and the expected conduct of ATP Holders and persons employed by or associated with an ATP Holder. The Exchange also proposes in Rule 902.1NY to allow access to the System by Sponsored Participants. ATP Holders, and persons employed by or associated with any ATP Holder, while using the facilities of NYSE Amex, may not engage in conduct: (i) Inconsistent with the maintenance of a fair and orderly market; (ii) apt to impair public confidence in the operations of NYSE Amex; or (iii) inconsistent with the ordinary and efficient conduct of business. Activities that may violate these provisions include, but are not limited to: (a) Failure of a Market Maker to provide quotations in accordance with Rule 925NY; (b) failure of a Market Maker to bid or offer within the ranges specified by Rule 925NY; (c) failure of an ATP Holder to adequately supervise a person employed by or associated with such ATP Holder to ensure that person's compliance with NYSE Amex Rules; (d) failure to abide by a determination of NYSE Amex; and (e) refusal to provide information requested by NYSE Amex.

Proposed NYSE Amex Rule 920NY. Proposed NYSE Amex Rule 920NY defines ''Market Maker'' on the NYSE Amex System. A Market Maker on the System will be an ATP Holder registered with NYSE Amex for the purpose of submitting quotes electronically and making transactions as a dealer-specialist through the System from on the trading floor or remotely from off the trading floor. A Market Maker submitting quotes remotely is not eligible to participate in trades effected in open outcry except to the extent that such Market Maker's quotation represents the best bid or offer on the Exchange (''BBO''). Market Makers will be designated as specialists on NYSE Amex for all purposes under the Act and the Rules and Regulations thereunder. A Market Maker on NYSE Amex will be either a Specialist, a Floor Market Maker or a Remote Market Maker.

A Specialist must provide continuous two-sided quotations throughout the trading day in its appointed issues for 90% of the time the Exchange is open for trading in each issue. Specialists are assigned a location on the Floor where their issues will trade; e-Specialists are Market Makers located off the Floor who also have a 90% quoting obligation.

Remote Market Makers (''RMMs'') are Market Makers who must provide continuous two sided quotations throughout the trading day in their appointed issues for 60% of the time the Exchange is open for trading in each issue. RMMs are located off the Floor of the Exchange, and generally have no rights with respect to open outcry transactions that take place on their quoted prices.

Floor Market Makers (''FMMs'') are Market Makers who also must provide continuous two sided quotations throughout the trading day in their appointed issues for 60% of the time the Exchange is open for trading in each issue, and, in addition, are appointed to a Trading Zone on the Floor.

Unless specified, or unless the context requires otherwise, the term Market Maker in the NYSE Amex Rules refers to Specialists, Floor Market Makers, and Remote Market Makers.[7]

Proposed NYSE Amex Rule 921.1NY. The Exchange is proposing NYSE Amex Rule 921.1NY to limit Remote Market Maker access to the System to those ATP Holders or officers, partners, employees or associated persons of ATP Holders that are registered with NYSE Amex as Market Maker Authorized Traders (''MMATs''). MMATs will be required to pass an NYSE Amex conducted examination to demonstrate their knowledge of NYSE Amex rules prior to being approved by NYSE Amex as an MMAT. NYSE Amex also may require a Remote Market Maker to provide additional information NYSE Amex considers necessary to establish whether a person should be approved as an MMAT. A person may be approved conditionally as an MMAT subject to any conditions NYSE Amex's Chief Regulatory Officer considers appropriate in the interests of maintaining a fair and orderly market.

Rule 921.1NY will permit NYSE Amex to suspend or withdraw the registration of an MMAT if NYSE Amex determines that: (i) The person has caused the Market Maker to fail to comply with the Rules of NYSE Amex;

[6] *See* NYSE Arca Rule 6.2.

[7] *See* e-mail dated December 22, 2008, from Andrew B. Stevens, Chief Counsel—U.S. Equities & Derivatives, NYSE Euronext, Inc., to Natasha Cowen, Special Counsel, Division of Trading and Markets, Commission (restoring certain unintentionally omitted text).

(ii) the person is not properly performing the responsibilities of an MMAT; (iii) the person has failed to meet the conditions described above (*e.g.*, failed the Exchange administered examination); or (iv) NYSE Amex believes it is in the best interest of fair and orderly markets. If NYSE Amex suspends the registration of a person as an MMAT, the Remote Market Maker must not allow the person to submit quotes and orders on NYSE Amex System. The registration of an MMAT also will be withdrawn upon the written request of the ATP Holder for which the MMAT is registered. Such written request must be submitted on the form prescribed by NYSE Amex.

Proposed NYSE Amex Rule 922NY. Proposed NYSE Amex Rule 922NY is based on NYSE Arca Rule 6.34, prohibits ATP Holders who are physically on the Floor from trading for their own personal account or for an account in which they have an interest, unless part of their market making obligations. Floor Brokers are thus prohibited from trading for an account for which they have an interest except to resolve a bona fide error resulting from their floor brokerage business.

Proposed NYSE Amex Rule 923NY. NYSE Amex is proposing changes to the manner in which Market Maker appointments are made. Similar to current NYSE Arca Rule 6.35, Market Makers will be required to apply for an appointment in one or more options classes. NYSE Amex may appoint one Specialist per option class, additional e-Specialists, and an unlimited number of Market Makers in each class unless NYSE Amex determines that the number of Market Makers appointed to a particular option class should be limited whenever, in NYSE Amex's judgment, system capacity limits the number of Market Makers who may participate in a particular option class.

NYSE Amex is proposing to delineate the number of classes per ATP that a Market Maker may select for its appointment as follows: (i) Market Makers with one ATP will have up to 100 option issues included in their appointment; (ii) Market Makers with two ATPs will have up to 250 option issues included in their appointment; (iii) Market Makers with three ATPs will have up to 750 option issues included in their appointment; and (iv) Market Makers with four ATPs will have all option issues traded on NYSE Amex included in their appointment. Market Makers may select from among any option issues traded on NYSE Amex for inclusion in their appointment, subject to the approval of NYSE Amex.

In addition, Floor Market Makers must select appointment to a Trading Zone on the Floor. The issues assigned to a Trading Zone by the Exchange will not be counted towards the number of issues per ATP selected by the Floor Market Maker. All transactions by a Market Maker in open outcry effected in issues in their appointed Trading Zone will be considered as transactions within their primary appointment. Specialists will be appointed to the Trading Zone designated for their issues.

NYSE Amex will continue to consider the following factors when determining whether to approve the appointment of a Market Maker in each security: (i) The Market Maker's preference; (ii) the financial resources available to the Market Maker; (iii) the Market Maker's experience, expertise and past performance in making markets, including the Market Maker's performance in other securities; (iv) the Market Maker's operational capability; and (v) the maintenance and enhancement of competition among Market Makers in each security in which they are appointed.

Market Makers will be permitted to change the option issues that are included in their appointment, subject to the approval of NYSE Amex and provided that such request is made in a form and manner prescribed by NYSE Amex. In considering whether to approve Market Makers' request to change their appointment, NYSE Amex will consider the five factors set forth directly above. Market Makers will be permitted to withdraw from trading an option issue that is within their appointment by providing NYSE Amex with three business days' written notice of such withdrawal. Market Makers who fail to give advance written notice of withdrawal to NYSE Amex may be subject to formal disciplinary action pursuant to NYSE Alternext Rule Section 9A.

NYSE Amex will be permitted to suspend or terminate any appointment of a Market Maker in one or more option issues under Rule 923NY whenever, in NYSE Amex's judgment, the interests of a fair and orderly market are best served by such action. A Market Maker will be able to seek review of any action taken by NYSE Amex pursuant to the proposed Rule, including the denial of the appointment for, or the termination or suspension of, a Market Maker's appointment in an option issue or issues in accordance with Rule Section 9A.

Market Makers will continue to be required to trade at least 75% of their contract volume per quarter in classes within their appointment.

NYSE Amex will periodically conduct an evaluation of Market Makers to determine whether they have fulfilled performance standards relating to, among other things, quality of markets, competition among Market Makers, observance of ethical standards and administrative factors. In so doing, NYSE Amex may consider any relevant information including, but not limited to, the results of a Market Maker evaluation, trading data, a Market Maker's regulatory history and such other factors and data as may be pertinent in the circumstances. If NYSE Amex finds any failure by a Market Maker to meet minimum performance standards, NYSE Amex will be permitted to take the following actions after written notice and after opportunity for hearing pursuant to Section 9A: (i) Restrict appointments to additional option issues in the Market Maker's primary appointment; (ii) suspend, terminate or restrict an appointment in one or more option issues; or (iii) suspension, termination, or restriction of the Market Maker's registration in general. If a Market Maker's appointment in an option issue or issues has been terminated because it failed to meet minimum performance standards, the Market Maker will not be re-appointed as a Market Maker in that option issue or issues for a period not to exceed six months.

Proposed NYSE Amex Rule 925NY. NYSE Amex is proposing new Rule 925NY to outline Market Maker obligations (i) generally, (ii) within a Market Maker's appointed classes, and (iii) outside of a Market Maker's appointed classes on the System. Unlike NYSE Arca Rule 6.37, upon which it is based, NYSE Amex will not have an in-person requirement. In-person requirements date back to a time when the only way for Market Makers to meet their obligations was to be present on the Floor to respond to a call for a market. In a modern marketplace, most of the liquidity on the Exchange is available electronically, and only electronically submitted bids and offers are able to be represented in the disseminated quote. The intent of the in-person requirement is actually better served by the 60% quoting obligation for Market Makers, and the requirement to conduct 75% of one's business within one's primary appointment.

Proposed NYSE Amex Rule 925.1NY. NYSE Amex is proposing new Rule 925.1NY to outline Market Maker quoting obligations on the System. Market Makers will be required to undertake a meaningful obligation to provide continuous two-sided markets in classes traded on the System.

Proposed Rule 925.1NY generally is consistent with NYSE Arca Rule 6.37B. Under the proposed Rule, Market Makers only will be permitted to enter quotations in the classes included in their appointment.

Proposed NYSE Amex Rule 925.2NY. NYSE Amex is proposing new Rule 925.2NY that will allow Market Makers to enter on the System all permitted order types. However, orders do not satisfy or contribute to meeting a Market Maker's quoting obligation; that obligation is only satisfied by submission of legal width quotes.

Proposed NYSE Amex Rules 927NY–927.3NY. The Exchange describes in proposed Rules 927NY–927.3NY Specialists and their rights, duties, and obligations, including the requirements for Information Barriers for ATP Holders affiliated with a Specialist.

Proposed NYSE Amex Rules 927.4NY–927.6NY. The Exchange is also describing in proposed Rules 927.4NY–927.6NY e-Specialists, who are Remote Market Makers appointed to fulfill certain obligations required of Specialists. In addition to the Specialist, it is possible to have multiple e-Specialists.

Proposed NYSE Amex Rule 928NY. NYSE Amex is proposing new Rule 928NY to provide a mechanism for limiting Market Maker risk during periods of increased and significant trading activity on the System in a Market Maker's appointment. NYSE Amex proposes setting the ''n'' period for calculation of the number of trades by a Market Maker at one second. Furthermore, NYSE Amex will no longer generate two-sided quotes on behalf of a Specialist in the event that there are no Market Makers quoting in an issue. Rather, in the event that there are no Market Makers quoting in the issue, the best bids and offers of those orders residing in the Consolidated Book in the issue will be disseminated as the BBO. If there are no Market Makers quoting in the issue and there are no orders in the Consolidated Book in the issue, NYSE Amex System will disseminate a bid of zero and an offer of zero in that issue.

Proposed NYSE Amex Rule 930NY. Proposed NYSE Amex Rule 930NY defines a Floor Broker as an ATP Holder who is registered with the Exchange for the purpose, while on the Floor, to accept and execute options orders received from ATP Holders and, in certain circumstances, orders from others.

Proposed NYSE Amex Rules 931NY–932NY. Proposed NYSE Amex Rules 931NY–932NY describe the registration and authorization of Floor Brokers, and are substantially the same as NYSE Arca Rules 6.44, 6.45, and 6.46.

Proposed NYSE Amex Rule 933NY. Proposed NYSE Amex Rule 933NY describes the responsibilities of Floor Brokers, and is substantially the same as NYSE Arca Rule 6.46, with the addition of insuring compliance with Section 11(a)(1) of the Act. An ATP Holder must ensure that each of its transactions complies with Section 11(a) of the Act, which generally prohibits an ATP Holder from effecting a transaction trading for its own account, the account of an associated person, or an account with respect to which it or an associated person thereof exercises investment discretion (each, a ''covered account'') unless a valid exemption in the statute or the rules thereunder applies.

In cases where a Floor Broker's transaction would occur at the same price as one or more orders on the electronic book, the Floor Broker, if it can rely on no exception other than the ''G'' exception (Section 11(a)(1)(G); Rule 11a1–1(T)), must, in addition to complying with the other requirements of the ''G'' exemption, yield to all orders in the Consolidated Book at the same price if the Floor Broker has no ability to determine that an order in the Consolidated Book is not the order of a non-ATP Holder. In addition, in the case where an ATP Holder submits an order to the book (or an order is submitted on its behalf) and such ATP Holder is relying on the ''G'' exemption, the order must be entered as IOC.

In addition, when relying on the exemption set forth in Rule 11a2–2(T) under the Act, a Floor Broker may not enter into the NYSE Alternext System any order for a covered account, including orders sent to it by an affiliated ATP Holder from off the floor, if the order is for such affiliated ATP Holder's own account, the account of an associated person, or an account over which it or an associated person exercises investment discretion.

Proposed NYSE Amex Rule 934NY. NYSE Amex is proposing Rules 934NY, 934.1NY, 934.2NY, and 934.3NY to govern crosses effected on the trading floor. Proposed Rule 934NY describes (i) Customer-to-Customer crosses and (ii) Non-facilitation (Regular Way) crosses. Proposed Rule 934.1NY describes Facilitation Cross Transactions. Proposed Rule 934.2NY describes At-Risk Cross Transactions, while Proposed Rule 934.3NY describes Solicitation. In all cases, Floor Brokers must request bids and offers for the option series involved and make the Trading Crowd and the Trading Official aware of the request for market. Trading crowd participants will be given a reasonable time to respond with the prices and sizes at which they would be willing to participate in the cross. With respect to facilitations, Floor Brokers still will be permitted to participate in up to 40% of the balance of an order to be facilitated once Customer bids or offers in the Consolidated Book at or better than the proposed execution price, have been satisfied.

There is no electronic crossing mechanism proposed for NYSE Amex System at this time.

Proposed NYSE Amex Rule 935NY. Proposed NYSE Amex Rule 935NY requires Floor Brokers to expose agency orders for a period of time before attempting to execute them as Principal, and is based on NYSE Arca Rule 6.47A.

Proposed NYSE Amex Rule 935NY. The Exchange describes in proposed Rule 935NY Discretionary Transactions, and limits a Floor Broker's use of discretion on orders.

Proposed NYSE Amex Rule 937NY. Proposed NYSE Amex Rule 937NY limits a Floor Broker from acting as both Principal and Agent in the Same Transaction unless it is part of an error resulting from the Floor Broker's error or omission.

Proposed NYSE Amex Rule 940NY. Proposed NYSE Amex Rule 940NY describes the obligations of Trading Officials for fair, orderly, and competitive market.

Proposed NYSE Amex Rule 952NY. NYSE Amex is proposing new NYSE Amex Rule 952NY to govern the opening process, which traditionally has been referred to as a ''rotation,'' and which will be referred to as an ''auction'' on the NYSE Amex System. A ''Trading Auction'' is a process by which trading is initiated in a specified options class. Trading Auctions may be employed at the opening of NYSE Amex each business day or to re-open trading after a trading halt. Trading Auctions will be conducted automatically by the System.

The System will accept Market and Limit Orders and quotes for inclusion in the opening auction process (''Auction Process'') until the Auction Process is initiated in that option series. Prior to the Auction Process, (''pre-opening''), non-Market Makers will be able to submit orders to the System and Market Makers will be able to submit two-sided quotes and orders to the System. Contingency orders (except for ''opening only'' orders) will not participate in the Auction Process. Any eligible open orders residing in the Consolidated Book from the previous trading session will be included in the Auction Process. After the primary market for the underlying security disseminates the

opening trade or the opening quote (or the first disseminated value for index options), the related option series will be opened automatically based on the following principles and procedures:

a. The System will determine a single price at which a particular option series will be opened.

b. Orders and quotes in the System will be matched up with one another based on price-time priority. Orders at or better than the opening price will have priority over Market Maker quotes.

c. Orders in the Consolidated Book that were not executed during the Auction Process shall become eligible for the Core Trading Session immediately after the conclusion of the Auction Process.

To determine the opening price in a series, upon receipt of the first consolidated quote or trade of the underlying security, the System will compare the OPRA NBBO market with an instantaneous BBO market. NYSE Amex System will generate an opening trade if possible or open a series on the quoted market. The System then will send the NYSE Amex BBO quote to OPRA.

The opening price of a series will be the price, as determined by the System, at which the greatest number of contracts will trade at or nearest to the midpoint of the initial NBBO disseminated by OPRA, if any, or the midpoint of the best quote bids and quote offers in the Consolidated Book. Midpoint pricing will not occur if that price would result in an order or part of an order being traded through. Instead the Trading Auction will occur at that limit price, or, if the limit price is superior to the quoted market, within the range of 75% of the best quote bid and 125% of the best quote offer. The same process will be followed to reopen an option class after a trading halt.

Unmatched orders and Market Maker quotes that are marketable against the initial NBBO will ''sweep'' through the Consolidated Book and be executed in price/time priority. If the best price is at an away Market Center(s), orders will be routed away to the relevant Market Center(s).

Proposed NYSE Amex Rule 953NY. Proposed NYSE Amex Rule 953NY outlines procedures for halting or suspending trading in a class of options.

Proposed NYSE Amex Rule 954NY. Proposed NYSE Amex Rule 954NY, Order Identification, is based on NYSE Arca Rule 6.66; however, the Exchange is proposing to exclude the requirements to identify the particular ATP Holder when requesting a quote and size from the crowd, in order to avoid the possibility of disparate treatment. Additionally, the Exchange is proposing to not include the Commentaries found in NYSE Arca Rule 6.66, as the Exchange finds these inconsistent with the efforts to make the market transparent.

Proposed NYSE Amex Rules 955NY and 956NY. Proposed NYSE Amex Rules 955NY and 956NY describe the requirements for order format and system entry requirements, and the elements required for keeping a record of orders, and are based on NYSE Arca Rules 6.67 and 6.68. The Exchange will not maintain and preserve all electronic orders on behalf of ATP Holders, but is still bound by its own requirements to preserve records of orders.

Proposed NYSE Amex Rule 957NY. Proposed NYSE Amex Rule 957NY describes the reporting duties of ATP Holders. Although based on NYSE Arca Rule 6.69, the Exchange is proposing to require open outcry transactions between a Floor Broker and a Market Maker to be reported by the Floor Broker, regardless of who is the seller. The Floor Broker will already have the order details systematized by virtue of it being input into an Electronic Order Capture device.

Proposed NYSE Amex Rule 958NY. Proposed NYSE Amex Rule 958NY determines that the execution price is binding despite errors in reporting the price and is based on NYSE Arca Rule 6.70.

Proposed NYSE Amex Rule 959NY. Proposed NYSE Amex Rule 959NY describes the meaning of premium bids and offers, and is based on NYSE Arca Rule 6.71.

Proposed NYSE Amex Rule 960NY. Proposed NYSE Amex Rule 960NY describes the minimum quoting increments and the minimum trading increments for options, and is based on NYSE Arca Rule 6.72.

Proposed NYSE Amex Rule 961NY. Proposed NYSE Amex Rule 961NY outlines the manner of bidding or offering, either electronically through the NYSE Amex System, or in open outcry, and is substantially the same as NYSE Arca Rule 6.73.

Proposed NYSE Amex Rule 963NY. Proposed NYSE Amex Rule 963NY describes Priority and Order Allocation Procedures for Open Outcry trading. These provisions are substantially the same as used on other floor based options exchanges. Generally, bids and offers are afforded priority on a price time basis on response to a call for a market. The Floor Broker or Market Maker who calls for the market is responsible for determining the sequence in which bids or offers are vocalized. If bids or offers are made simultaneously, they will be on parity. If an ATP Holder has previously requested a market to fill an order, and the crowd has provided a collective response, then the order will be allocated on a size pro rata basis.

Proposed NYSE Amex Rule 963NY. Proposed Rule 963NY also provides for a Specialist's entitlement to 40% of the balance of any order after Customer bids and offers in the Consolidated book have been satisfied; provided, however, that the Specialist has vocally responded to the Floor Broker's call for a market, and has responded with a price that is at least equal to the best bid or offer. In addition, the Rule describes Priority on Split Price Transactions, which are substantially the same as approved in NYSE Arca Rule 6.75(h).

Proposed NYSE Amex Rule 963.1NY. Proposed Rule 963.1NY describes the proper trading procedures for complex orders, which are based on NYSE Arca Rule 6.75 Commentary .01. and NYSE Arca Rule 6.91 Commentaries .01 and .02.

Proposed NYSE Amex Rule 964NY. NYSE Amex will display all non-marketable Limit Orders in the Display Order Process of the Consolidated Book. Except as otherwise permitted by Rule 964NY, all bids and offers at all price levels in the Consolidated Book will be displayed on an anonymous basis. The System also will disseminate current consolidated quotations/last sale information, and such other market information as may be made available from time to time pursuant to agreement between NYSE Amex and other Market Centers, consistent with the Plan for Reporting of Consolidated Options Last Sale Reports and Quotation Information.

Bids and offers will be ranked and maintained in the Display Order Process and/or Working Order Process of the Consolidated Book according to account type and price-time priority.

a. Within the Display Order Process

Limit Orders, with no other conditions, and quotes will be ranked based on account type and the specified price and the time of original order or quote entry. The display portion of Reserve Orders (not the reserve size) will be ranked in the Display Order Process by account type and at the specified limit price and the time of order entry. When the display portion of the Reserve Order is decremented completely, the display portion of the Reserve Order will be refreshed for

(1) The display amount; or

(2) The entire reserve amount, if the remaining reserve amount is smaller than the display amount, from the reserve portion and shall be submitted

and ranked at the specified limit price and the new time that the displayed portion of the order was refreshed.

b. Within the Working Order Process

(1) The reserve portion of Reserve Orders will be ranked based on account type and the specified limit price and the time of original order entry. After the displayed portion of a Reserve Order is refreshed from the reserve portion, the reserve portion remains ranked based on the original time of order entry, while the displayed portion is sent to the Display Order Process with a new time-stamp.

(2) All-or-None Orders will be ranked based on account type and the specified limit price and the time of order entry.

(3) Stop and Stop Limit Orders will be ranked based on account type and the specified stop price and the time of order entry.

(4) Stock Contingency Orders will be ranked based on account type and the specified limit price and the time of order entry.

(5) Tracking Orders will be ranked based on account type and the specified limit price and the time of order entry.

Consistent with Rule 602 under Regulation NMS, the best-ranked displayed bids and the best ranked displayed offers in the Consolidated Book and the aggregate displayed size of such bids and offers associated with such prices shall be collected and made available to vendors for dissemination.

Proposed Rule 964NY also outlines the applicable requirements for order execution and priority on the System. Incoming orders will be matched against bids and offers in the System based on price, account type, and time. For an execution to occur in any order process, the price must be equal to or better than the NBBO, unless the System has routed orders to away Market Centers at the NBBO.

The NYSE Amex System first will attempt to match incoming marketable bids and offers against bids or offers in the Display Order Process at the display price of the resident bids or offers for the total amount of option contracts available at that price or for the size of the incoming order, whichever is smaller. For the purposes of proposed Rule 964NY, the size of an incoming Reserve Order will include the displayed and reserve size, and the size of the portion of the Reserve Order resident in the Display Order Process is equal to its displayed size.

NYSE Amex proposes to allocate incoming marketable bids and offers as follows:

(1) The incoming marketable bid or offer will be matched against Customer orders in the Display Order Process at the NBBO.

(2) If there are any remaining contracts to be executed after matching against Customer orders, and the incoming marketable bid or offer has been directed to a Directed Order Market Maker, the Directed Order Market Maker will receive 40% of the balance of the order, provided the Directed Order Market Maker is quoting at the NBBO for at least that size.

(3) If the incoming marketable bid or offer has not been directed to a Directed Order Market Maker, or if the Directed Order Market Maker is not quoting at the NBBO, the bid or offer will be matched against the Specialist Pool for 40% of the remaining balance of the bid or offer, provided the Specialist Pool is quoting at the NBBO for at least that size.

(4) If the bid or offer has not been executed in its entirety, the remaining part of the order shall be matched against non-customer bids and offers on a size pro-rata basis.

If the original bid or offer is for 5 contracts or less, and has either not been directed to a Directed Order Market Maker, or the Directed Order Market Maker is not quoting at the NBBO, the entire bid or offer will be matched against the bid or offer of the Specialist Pool after being matched against any customer bids or offers in the Display Order Process, provided the Specialist Pool is quoting at the NBBO. The participants in the Specialist Pool will be allocated orders of five contracts or less on a rotating basis, provided the participant's quoted size is equal to or greater than the size of the allocation. The Exchange will monitor the sizes of all orders received, and, on a quarterly basis, will evaluate the percentage of volume constituted by orders of five contracts or less. If 40% or more of the order flow is comprised of orders of five contracts or less, the Exchange will reduce the eligible size for orders included in this provision.

If the bid or offer has not been executed in its entirety, the remaining part of the order shall be matched against any Working Orders at or better than the NBBO.

An incoming marketable bid or offer will be matched against orders within the Working Order Process in the order of their ranking, at the price of the displayed portion (for Reserve Orders) or at the limit price (for most other Working Order types), for the total amount of option contracts available at that price or for the size of the incoming bid or offer, whichever is smaller. Incoming marketable bids and offers will be matched against Tracking Orders in the order of their ranking, but only at a price equal to the NBBO, and only if the incoming marketable bid or offer is eligible for routing and is less than the size of the Tracking Orders.

If an incoming marketable order has not been executed in its entirety on the System and it has been designated as an order type that is eligible to be routed away, the order will be routed for execution to another Market Center(s).

The order will be routed, either in its entirety or as component order, to another Market Center(s) as a Limit Order equal to the price and up to the size of the quote published by the Market Center(s). The remaining portion of the order, if any, will be ranked and displayed in the Consolidated Book in accordance with the terms of such order and such order shall be eligible for execution pursuant to Rule 964NY. A marketable Reserve Order may be routed serially as component orders, such that each component corresponds to the display size of the Reserve Order.

An order that has been routed away will remain outside of the System for a prescribed period of time and may be executed in whole or in part subject to the applicable trading rules of the relevant Market Center. While an order remains outside of the System, it will have no time standing, relative to other orders received from Users at the same price that may be executed against the Consolidated Book.

Requests from Users to cancel their orders while the orders are routed away to another Market Center and remain outside the System will be processed subject to the applicable trading rules of the relevant Market Center.

Where an order or portion of an order is routed away and is not executed either in whole or in part at the other Market Center (*i.e.*, all attempts at the fill are declined or timed-out), the order shall be ranked and displayed in the Consolidated Book in accordance with the terms of such order, and such order shall be eligible for execution under proposed Rule 964NY, but will not have time standing relative to other orders received from Users at the same price while it was outside the System.

Proposed NYSE Amex Rule 964.1NY describes Directed Orders, and is substantially the same as NASDAQ OMX PHLX Rule 1080(l). It would be considered a violation of just and equitable principals of trade and a misuse of non public information for a Directed Order Market Maker to become aware of an impending Directed Order so as to improve the quote to momentarily match the NBBO, and then worsen the price of the quote following execution of the Directed Order.

Proposed NYSE Amex Rule 964.2NY. Proposed NYSE Amex Rule 964.2NY describes the participation entitlement of Specialists and e-Specialists, which collectively comprise the Specialist Pool, as defined in proposed Rule 900.3NY(y). Generally, the Specialist Pool is entitled to 40% of the remaining balance of an order after any orders on behalf of Customers in the Consolidated Book are satisfied. The Specialist's participation within the Pool is granted extra weighting, with no more than 66 2/3% if there is only one e-Specialist, and no more than 50% if there are two or more e-Specialists.

Proposed NYSE Amex Rule 965NY. Proposed NYSE Amex Rule 965NY, Contract Made on Acceptance of Bid or Offer, is based on NYSE Arca Rule 6.77 and on NYSE Alternext Rule 953—ANTE.

Proposed NYSE Amex Rule 970NY. Proposed NYSE Amex Rule 970NY is substantially the same as NYSE Arca Rule 6.86. Rule 970NY will state the minimum quotation size will be one contract. NYSE Arca Rule 6.86 Commentary .03 is proposed to be designated as NYSE Amex Rule 970.1NY.

Proposed NYSE Amex Rule 975NY. The Exchange is also proposing new NYSE Amex Rule 975NY—Obvious Errors and Catastrophic Errors. Proposed Rule 975NY is substantially based on NYSE Arca Rule 6.87.

Proposed NYSE Amex Rules 990NY–993NY. Proposed NYSE Amex Rules 990NY–993NY describe the Operation of the Linkage, Order Protection, Locked and Crossed Markets, and Limitations on Principal Order Access. These Rules are essentially the same as the uniform rules governing Linkage on all options exchanges, including existing NYSE Alternext Rules 940–944, and Rule 941 ANTE.

Proposed NYSE Amex Rule 995NY. NYSE Amex proposes new Rule 995NY which describes Prohibited Conduct. The first section of the proposed rule prohibits conduct that threatens, harasses, intimidates, constitutes a ''refusal to deal'' or retaliates against another ATP Holder or associated person of an ATP Holder. The second section prohibits de facto market making through the use of Customer orders, since Customer orders have priority at any price over the bids and offers of non-customers. The third section prohibits ATP Holders who have knowledge of the material terms and conditions of an order, the execution of which is imminent, from buying or selling related options, underlying securities, or related securities, until the terms of the order are disclosed to the trading crowd, or the execution of the order is no longer considered to be imminent.

In addition, the Exchange is proposing to add Part 1C to the Supplementary Material of NYSE Alternext Rule 476A. Part 1C lists options rule violations and their applicable fines that will be in effect upon implementation of the NYSE Amex System and the relocation of the Trading Floor to 11 Wall Street, New York, NY.

Current NYSE Alternext Rule 476 includes Sanctioning Guidelines in its Supplementary Material. While the principles to be considered in determining sanctions will continue, the guidelines after Supplementary Material .01(C)(19) that describe specific types of violations all pertain to the existing NYSE Alternext Rules, and will not apply to violations of Rules in Section 900NY.

The Exchange believes the proposed new rules will reduce regulatory confusion, encourage efficient transactions on both the electronic market and in open outcry trading, and delineate an unambiguous standard for conducting a fair and orderly market.

2. Statutory Basis

The Exchange believes that this filing is consistent with Section 6(b) of the Act,[8] in general, and furthers the objectives of Section 6(b)(5) of the Act,[9] in particular, in that it is designed to prevent fraudulent and manipulative acts and practices, to promote just and equitable principles of trade, to foster cooperation and coordination with persons engaged in facilitating transactions in securities, and to remove impediments to, and perfect the mechanisms of a free and open market and a national market system.

B. Self-Regulatory Organization's Statement on Burden on Competition

The Exchange does not believe that the proposed rule change will impose any burden on competition that is not necessary or appropriate in furtherance of the purposes of the Act.

C. Self-Regulatory Organization's Statement on Comments on the Proposed Rule Change Received From Members, Participants, or Others

No written comments were solicited or received with respect to the proposed rule change.

[8] 15 U.S.C. 78f(b).

[9] 15 U.S.C. 78f(b)(5).

III. Date of Effectiveness of the Proposed Rule Change and Timing for Commission Action

Within 35 days of the date of publication of this notice in the **Federal Register** or within such longer period (i) as the Commission may designate up to 90 days of such date if it finds such longer period to be appropriate and publishes its reasons for so finding or (ii) as to which the self-regulatory organization consents, the Commission will:

(A) By order approve the proposed rule change, or

(B) Institute proceedings to determine whether the proposed rule change should be disapproved.

IV. Solicitation of Comments

Interested persons are invited to submit written data, views, and arguments concerning the foregoing, including whether the proposed rule change is consistent with the Act. Comments may be submitted by any of the following methods:

Electronic Comments

- Use the Commission's Internet comment form (*http://www.sec.gov/rules/sro.shtml*); or
- Send an e-mail to *rule-comments@sec.gov.* Please include File Number SR–NYSEALTR–2008–14 on the subject line.

Paper Comments

- Send paper comments in triplicate to Secretary, Securities and Exchange Commission, 100 F Street, NE., Washington, DC 20549.

All submissions should refer to File Number SR–NYSEALTR–2008–14. This file number should be included on the subject line if e-mail is used. To help the Commission process and review your comments more efficiently, please use only one method. The Commission will post all comments on the Commission's Internet Web site (*http://www.sec.gov/rules/sro.shtml*). Copies of the submission, all subsequent amendments, all written statements with respect to the proposed rule change that are filed with the Commission, and all written communications relating to the proposed rule change between the Commission and any person, other than those that may be withheld from the public in accordance with the provisions of 5 U.S.C. 552, will be available for inspection and copying in the Commission's Public Reference Room, 100 F Street, NE., Washington, DC 20549, on official business days between the hours of 10 a.m. and 3 p.m.

Copies of such filing also will be available for inspection and copying at the principal office of the Exchange. All comments received will be posted without change; the Commission does not edit personal identifying information from submissions. You should submit only information that you wish to make available publicly. All submissions should refer to File Number SR–NYSEALTR–2008–14 and should be submitted on or before January 21, 2009.

For the Commission, by the Division of Trading and Markets, pursuant to delegated authority.[10]

Florence E. Harmon,

Acting Secretary.

[FR Doc. E8–31053 Filed 12–30–08; 8:45 am]

BILLING CODE 8011–01–P

[10] 17 CFR 200.30–3(a)(12).

SECURITIES AND EXCHANGE COMMISSION

[Release No. 34–59144; File No. SR–NYSEALTR–2008–12]

Self-Regulatory Organizations; NYSE Alternext US LLC; Notice of Filing of Proposed Rule Change To Establish Its New Risk Management Gateway Service

December 22, 2008.

Pursuant to section 19(b)(1) of the Securities Exchange Act of 1934 (''Act'')[1] and Rule 19b–4 thereunder,[2] notice is hereby given that on December 12, 2008, NYSE Alternext US LLC (''NYSE Alternext'' or ''Exchange'') filed with the Securities and Exchange Commission (''Commission'') the proposed rule change as described in Items I, II, and III below, which Items have been prepared by the Exchange. The Commission is publishing this notice to solicit comments on the proposed rule change from interested persons.

I. Self-Regulatory Organization's Statement of the Terms of Substance of the Proposed Rule Change

The Exchange, formerly the American Stock Exchange LLC, is proposing to establish its new Risk Management Gateway (''RMG'') service.

II. Self-Regulatory Organization's Statement of the Purpose of, and Statutory Basis for, the Proposed Rule Change

In its filing with the Commission, NYSE Alternext included statements concerning the purpose of, and basis for, the proposed rule change and discussed any comments it received on the proposed rule change. The text of these statements may be examined at the places specified in Item IV below. NYSE Alternext has prepared summaries, set forth in sections A, B, and C below, of the most significant aspects of such statements.

A. Self-Regulatory Organization's Statement of the Purpose of, and Statutory Basis for, the Proposed Rule Change

1. Purpose

The Exchange proposes to offer, through NYSE Euronext Advanced Trading Solutions, Inc., the RMG service to NYSE Alternext members and member organizations. NYSE Transact Tools, Inc, a division of the NYSE Euronext Advanced Trading Solutions Group (''NYXATS''), owns RMG. RMG is a part of the NYSE Alternext Trading Systems (defined below) operated on behalf of the Exchange by New York Stock Exchange LLC (''NYSE'').[3]

Background

As described more fully in a related rule filing,[4] NYSE Euronext acquired The Amex Membership Corporation (''AMC'') pursuant to an Agreement and Plan of Merger, dated January 17, 2008 (the ''Merger''). In connection with the Merger, the Exchange's predecessor, the American Stock Exchange LLC (''Amex''), a subsidiary of AMC, became a subsidiary of NYSE Euronext called NYSE Alternext US LLC, and continues to operate as a national securities exchange registered under Section 6 of the Securities Exchange Act of 1934, as amended (the ''Act'').[5] The effective date of the Merger was October 1, 2008.

In connection with the Merger, on December 1, 2008, the Exchange relocated all equities trading conducted on the Exchange legacy trading systems and facilities located at 86 Trinity Place, New York, New York (the ''86 Trinity Trading Systems''), to trading systems and facilities located at 11 Wall Street, New York, New York (the ''Equities Relocation''). The Exchange's trading systems and facilities at 11 Wall Street (the ''NYSE Alternext Trading Systems'') are operated by the NYSE on behalf of the Exchange.[6]

In order to implement the Equities Relocation, the Exchange adopted NYSE Rules 1–1004 as the NYSE Alternext Equities Rules to govern trading on the NYSE Alternext Trading Systems. Rule 54—NYSE Alternext Equities provides that only members are permitted to ''* * * make or accept bids or offers, consummate transactions, or otherwise transact business on the Floor for any security admitted to dealings on the [Exchange] * * *.''[7]

Pursuant to Rule 123B—NYSE Alternext Equities, however, the Exchange permits NYSE Alternext members and member organizations (a ''Sponsoring Member Organization'') to sponsor access to Exchange systems by non-member firms or customers (''Sponsored Participants''). Rule 123B—NYSE Alternext Equities is a general sponsored access rule that permits a Sponsoring Member Organization to sponsor a Sponsored Participant's access to Exchange systems for the Sponsored Participant's entry and execution of orders on the Exchange. Rule 123B—NYSE Alternext Equities reflects the Exchange's general policy regarding sponsored access to the Exchange; it does not govern access to NYSE Alternext Bonds.[8] NYSE Arca, Inc. and other market centers similarly permit sponsored access to their trading systems.

RMG

Traditionally, the customers of a member or member organization gave orders to the member or member organization and the member or member organization then submitted those orders to the Exchange on behalf of the customer. By means of sponsored access, a member or member organization will allow its customers to enter orders directly into the trading systems of the Exchange as Sponsored Participants, without the Sponsoring Member Organization acting as an intermediary.

To facilitate the ability of Sponsoring Member Organizations to monitor and oversee the sponsored access activity of their Sponsored Participants, NYXATS will offer an order-verification service to Sponsoring Member Organizations. This service will act as a risk filter by causing the orders of Sponsored Participants to pass through RMG prior to entering the

[1] 15 U.S.C. 78s(b)(1).

[2] 17 CFR 240.19b–4.

[3] NYXATS similarly seeks to offer the same services to the NYSE through a separate filing, SR–NYSE–2008–101.

[4] *See* Securities Exchange Act Release No. 58673 (September 29, 2008), 73 FR 57707 (October 3, 2008) (SR–NYSE–2008–60 and SR–Amex 2008–62) (approving the Merger).

[5] 15 U.S.C. 78f.

[6] *See* Securities Exchange Act Release No. 58705 (October 1, 2008), 73 FR 58995 (October 8, 2008) (SR–Amex 2008–63) (approving the Equities Relocation).

[7] *See also* Rule 2—NYSE Alternext Equities.

[8] That is, currently, the provisions of Rule 123B—NYSE Alternext Equities do not apply to Rule 86—NYSE Alternext Equities as that rule independently contains provisions related to how a user gains sponsored access to the NYSE Alternext Bonds system.

Exchange's trading systems for execution. When a Sponsored Participant's order passes through RMG, RMG software determines whether the order complies with order criteria that the Sponsoring Member Organization has established for that Sponsored Participant. The order criteria pertain to such matters as the size of the order (per order or daily quantity limits) or the credit limit (per order or daily value) that the Sponsoring Member Organization has established for the Sponsored Participant. Additional risk filters may also be selected by the Sponsoring Member Organization relating to specific symbols or end users.

If the order is consistent with the parameters set by the Sponsoring Member Organization, then RMG allows the order to continue along its path to the Exchange's trading systems. If the order falls outside of those parameters, then RMG returns the order to the Sponsored Participant. RMG will only return an order to the Sponsored Participant when the order fails to comply with the criteria set by the Sponsoring Member Organization.

RMG software interacts with orders only prior to the orders' entry into the Exchange's trading system for execution. RMG does not have order execution or trade reporting capabilities (though it will allow a Sponsoring Member Organization to monitor the orders of its Sponsored Participants). RMG maintains a record of all messages relating to Sponsored Participants' transactions and supplies a copy of such messages to the applicable Sponsoring Member Organization.

The Sponsoring Member Organization, and not RMG, will have full responsibility for ensuring that Sponsored Participants' sponsored access to the Exchange complies with the Exchange's sponsored access rules. The use of RMG by a Member Organization does not automatically constitute compliance with Exchange rules.

NYXATS will host RMG software on NYXATS' infrastructure. After passing through RMG software, each order will enter the NYSE Common Customer Gateway (CCG) [9] for connectivity to the Exchange's matching engine. In the future NYXATS may integrate RMG into the NYSE CCG for more direct access to the Exchange's matching engine.

The Exchange does not require Sponsoring Member Organizations to use RMG (even when it is integrated into NYSE CCG in the future). Sponsoring Member Organizations are free to use a competing risk-management service or to use none at all. The Exchange will not provide preferential treatment to Sponsoring Member Organizations using RMG.

The Exchange proposes to make RMG available to its members and member organizations pursuant to contractual arrangements. The Exchange believes that RMG will offer its members and member organizations another option in the efficient risk management of its Sponsored Participant's access to the NYSE Alternext Trading Systems.

2. Statutory Basis

The basis under the Act for this proposed rule change is the requirement under section 6(b)(5) [10] that an Exchange have rules that are designed to promote just and equitable principles of trade, to remove impediments to and perfect the mechanism of a free and open market and a national market system and, in general, to protect investors and the public interest. The proposed rule change also is designed to support the principles of section 11A(a)(1) [11] in that it seeks to assure economically efficient execution of securities transactions, make it practicable for brokers to execute investors' orders in the best market and provide an opportunity for investors' orders to be executed without the participation of a dealer. The Exchange believes that RMG is consistent with all the aforementioned principles because it fosters competition by providing another option in the efficient risk management of trading on the Exchange without the participation of a dealer.

B. Self-Regulatory Organization's Statement on Burden on Competition

The Exchange does not believe that the proposed rule change will impose any burden on competition that is not necessary or appropriate in furtherance of the purposes of the Act.

C. Self-Regulatory Organization's Statement on Comments on the Proposed Rule Change Received From Members, Participants, or Others

No written comments were solicited or received with respect to the proposed rule change.

III. Date of Effectiveness of the Proposed Rule Change and Timing for Commission Action

Within 35 days of the date of publication of this notice in the **Federal Register** or within such longer period (i) as the Commission may designate up to 90 days of such date if it finds such longer period to be appropriate and publishes its reasons for so finding or (ii) as to which the Exchange consents, the Commission will:

(A) By order approve the proposed rule change, or

(B) Institute proceedings to determine whether the proposed rule change should be disapproved.

IV. Solicitation of Comments

Interested persons are invited to submit written data, views, and arguments concerning the foregoing, including whether the proposed rule change is consistent with the Act. Comments may be submitted by any of the following methods:

Electronic Comments

- Use the Commission's Internet comment form (*http://www.sec.gov/rules/sro.shtml*); or
- Send an e-mail to *rule-comments@sec.gov*. Please include File No. SR–NYSEALTR–2008–12 on the subject line.

Paper Comments

- Send paper comments in triplicate to Secretary, Securities and Exchange Commission, Station Place, 100 F Street, NE., Washington, DC 20549–1090.

All submissions should refer to File Number SR–NYSEALTR–2008–12. This file number should be included on the subject line if e-mail is used. To help the Commission process and review your comments more efficiently, please use only one method. The Commission will post all comments on the Commission's Internet Web site (*http://www.sec.gov/rules/sro.shtml*). Copies of the submission, all subsequent amendments, all written statements with respect to the proposed rule change that are filed with the Commission, and all written communications relating to the proposed rule change between the Commission and any person, other than those that may be withheld from the public in accordance with the provisions of 5 U.S.C. 552, will be available for inspection and copying in the Commission's Public Reference Room, on official business days between the hours of 10 a.m. and 3 p.m. Copies of such filing also will be available for inspection and copying at the principal office of the Exchange. All comments received will be posted without change; the Commission does not edit personal identifying information from submissions. You should submit only information that you wish to make

[9] The NYSE CCG is a part of the NYSE Alternext Trading Systems, operated on behalf of the Exchange by NYSE.

[10] 15 U.S.C. 78f(b)(5).

[11] 15 U.S.C. 78k–1(a)(1).

available publicly. All submissions should refer to File Number SR–NYSEALTR–2008–12 and should be submitted on or before January 21, 2009.

For the Commission, by the Division of Trading and Markets, pursuant to delegated authority.[12]

Florence E. Harmon,

Acting Secretary.

[FR Doc. E8–31101 Filed 12–30–08; 8:45 am]

BILLING CODE 8011–01–P

SECURITIES AND EXCHANGE COMMISSION

[Release No. 34–59146; File No. SR–NYSEArca–2008–136]

Self-Regulatory Organizations; Notice of Filing of Proposed Rule Change by NYSE Arca, Inc. Amending NYSE Arca Equities Rule 5.2(j)(6), the Exchange's Initial Listing Standards for Equity Index-Linked Securities, Commodity-Linked Securities, Currency-Linked Securities, Fixed Income Index-Linked Securities, Futures-Linked Securities and Multifactor Index-Linked Securities

December 22, 2008.

Pursuant to section 19(b)(1)[1] of the Securities Exchange Act of 1934 (the ''Act'')[2] and Rule 19b–4 thereunder,[3] notice is hereby given that on December 10, 2008, NYSE Arca, Inc. (''NYSE Arca'' or ''Exchange'') filed with the Securities and Exchange Commission (''Commission'') the proposed rule change as described in Items I, II, and III below, which Items have been prepared by the Exchange. The Commission is publishing this notice to solicit comments on the proposed rule change from interested persons.

I. Self-Regulatory Organization's Statement of the Terms of Substance of the Proposed Rule Change

The Exchange proposes to amend NYSE Arca Equities Rule 5.2(j)(6), the Exchange's initial listing standards for Equity Index-Linked Securities, Commodity-Linked Securities, Currency-Linked Securities, Fixed Income Index-Linked Securities, Futures-Linked Securities and Multifactor Index-Linked Securities. The text of the proposed rule change is available on the Exchange's Web site at *http://www.nyse.com,* at the Exchange's principal office and at the Commission's Public Reference Room.

II. Self-Regulatory Organization's Statement of the Purpose of, and Statutory Basis for, the Proposed Rule Change

In its filing with the Commission, the self-regulatory organization included statements concerning the purpose of, and basis for, the proposed rule change and discussed any comments it received on the proposed rule change. The text of those statements may be examined at the places specified in Item IV below. The Exchange has prepared summaries, set forth in sections A, B, and C below, of the most significant parts of such statements.

A. Self-Regulatory Organization's Statement of the Purpose of, and Statutory Basis for, the Proposed Rule Change

1. Purpose

The Exchange is proposing to amend NYSE Arca Equities Rule 5.2(j)(6), the Exchange's initial listing standards for Equity Index-Linked Securities, Commodity-Linked Securities, Currency-Linked Securities, Fixed Income Index-Linked Securities, Futures-Linked Securities and Multifactor Index-Linked Securities (''Index-Linked Securities''), to provide for greater flexibility in the listing criteria for such securities, as set forth below.

Currently, Rule 5.2(j)(6)(A)(d) provides that the payment at maturity of a cash amount for Index-Linked Securities may or may not provide for a multiple of the direct or inverse performance of an underlying Reference Asset,[4] and in no event will a loss or negative payment at maturity be accelerated by a multiple that exceeds twice the performance of an underlying Reference Asset.

The Exchange proposes to amend Rule 5.2(j)(6)(A)(d) to allow the Exchange to consider for listing and trading Index-Linked Securities that provide that in no event will a loss or negative payment at maturity be accelerated by a multiple *that exceeds three times* the performance of an underlying Reference Asset.

The Exchange proposes these changes in order to allow the Exchange to initially consider for listing and trading Index-Linked Securities that employ investment strategies similar or analogous to certain Exchange-Traded Funds which list and trade on the Exchange pursuant to NYSE Arca Equities Rule 5.2(j)(3).[5] Currently, Exchange-Traded Funds are able to seek daily investment results, before fees and expenses, that correspond to three times the inverse or opposite of the daily performance (−300%) of the underlying indexes.

Limitation on Leverage

In connection with Index-Linked Securities that seek to provide investment results, before fees and expenses, in an amount that exceeds −300% of the percentage performance of the underlying benchmark index, the Exchange's proposal would continue to require specific Commission approval pursuant to section 19(b)(2) of the Act.[6] In particular, NYSE Arca Equities Rule 5.2(j)(6) would expressly prohibit Index-Linked Securities that seek to provide investment results, before fees and expenses, in an amount that exceeds −300% of the percentage performance of the underlying benchmark index, from being approved by the Exchange for listing and trading pursuant to Rule 19b–4(e) under the Act.[7]

The Exchange believes that a −300% limitation will permit Index-Linked Securities to provide investors with an incremental additional degree of leverage similar to instruments available to professional investors to manage risk. In addition, recommendations to investors of transactions in Index-Linked Securities are subject to the customer suitability requirements of NYSE Arca Equities Rule 9.2, as discussed below.

[12] 17 CFR 200.30–3(a)(12).

[1] 15 U.S.C. 78s(b)(1).

[2] 15 U.S.C. 78a.

[3] 17 CFR 240.19b–4.

[4] As defined in Rule 5.2(j)(6), ''Reference Assets'' include ''Equity Reference Assets,'' which consist of an underlying index or indexes of equity securities; ''Commodity Reference Assets,'' which consist of a basket or index of one or more physical commodities or commodity futures, options or other commodity derivatives or Commodity-Based Trust Shares (as defined in Rule 8.201); ''Currency Reference Assets,'' which include a basket or index of one or more currencies, or options or currency futures or other currency derivatives or Currency Trust Shares (as defined in Rule 8.202); ''Fixed Income Reference Asset'' which consist of one or more indexes or portfolios of notes, bonds, debentures or evidence of indebtedness that include, but are not limited to, U.S. Department of Treasury securities, government-sponsored entity securities, municipal securities, trust preferred securities, supranational debt and debt of a foreign country or a subdivision thereof; ''Futures Reference Asset'' which consists of an index of (a) futures on Treasury Securities, GSE Securities, supranational debt and debt of a foreign country or a subdivision thereof, or options or other derivatives on any of the foregoing; or (b) interest rate futures or options or derivatives; and ''Multifactor Reference Asset'' which consists of any combination of two or more Equity Reference Assets, Commodity Reference Assets, Currency Reference Assets, Fixed Income Reference Assets or Futures Reference Assets.

[5] *See* Securities Exchange Act Release No. 58825 (October 21, 2008), 73 FR 63756 (October 27, 2008) (SR–NYSEArca–2008–89). Order approving inverse fund shares that cannot exceed −300% of the inverse or opposite of the daily performance of an underlying index.

[6] 15 U.S.C. 78s(b)(2).

[7] 17 CFR 240.19b–4(e).

The Exchange notes that NYSE Arca Equities Rule 9.2(a) provides that an ETP Holder, before recommending a transaction in Index-Linked Securities, must have reasonable grounds to believe that the recommendation is suitable for their customer based on any facts disclosed by the customer as to its other security holdings and as to its financial situation and needs. Further, the rule provides, with a limited exception, that prior to the execution of a transaction recommended to a non-institutional customer, the ETP Holder shall make reasonable efforts to obtain information concerning the customer's financial status, tax status, investment objectives, and any other information that such ETP Holder believes would be useful to make a recommendation. Prior to the commencement of trading, the Exchange will inform its ETP Holders in an Information Bulletin of this suitability requirement. Specifically, ETP Holders will be reminded in the Information Bulletin that, in recommending transactions in these securities, they must have a reasonable basis to believe that the customer can evaluate the special characteristics, and is able to bear the financial risks, of such investment.

The Exchange believes that these changes will allow the Exchange greater flexibility in the listing of Index-Linked Securities, which will allow the Exchange to offer investors more investment options and to remain competitive in the marketplace. The Exchange believes that investors will continue to be protected because the payment at maturity cannot be based on a multiple that exceeds three times the inverse performance of an underlying Reference Asset.

2. Statutory Basis

The Exchange believes that the proposed rule change is consistent with section 6(b)[8] of the Act, in general, and furthers the objectives of section 6(b)(5),[9] in particular, in that it is designed to prevent fraudulent and manipulative acts and practices, to promote just and equitable principles of trade, to foster cooperation and coordination with persons engaged in facilitating transactions in securities, and to remove impediments to and perfect the mechanisms of a free and open market and a national market system, and, in general, to protect investors and the public interest. Specifically, the Exchange believes that the proposed change to the standards for listing and trading Index-Linked Securities enhances the investment opportunities for our users by providing them with an additional degree of leverage, while also limiting potential losses or negative payments to −300%.[10]

B. Self-Regulatory Organization's Statement on Burden on Competition

The Exchange does not believe that the proposed rule change will impose any burden on competition that is not necessary or appropriate in furtherance of the purposes of the Act.

C. Self-Regulatory Organization's Statement on Comments on the Proposed Rule Change Received From Members, Participants or Others

No written comments were solicited or received with respect to the proposed rule change.

III. Date of Effectiveness of the Proposed Rule Change and Timing for Commission Action

Within 35 days of the date of publication of this notice in the **Federal Register** or within such longer period (i) as the Commission may designate up to 90 days of such date if it finds such longer period to be appropriate and publishes its reasons for so finding or (ii) as to which the Exchange consents, the Commission will:

(A) By order approve the proposed rule change, or

(B) Institute proceedings to determine whether the proposed rule change should be disapproved.

IV. Solicitation of Comments

Interested persons are invited to submit written data, views, and arguments concerning the foregoing, including whether the proposed rule change is consistent with the Act. Comments may be submitted by any of the following methods:

Electronic Comments

- Use the Commission's Internet comment form (*http://www.sec.gov/rules/sro.shtml*); or
- Send an e-mail to *rule-comments@sec.gov*. Please include File Number SR–NYSEArca 2008–136 on the subject line.

Paper Comments

- Send paper comments in triplicate to Secretary, Securities and Exchange Commission, 100 F Street, NE., Washington, DC 20549–1090.

All submissions should refer to File Number SR–NYSEArca–2008–136. This file number should be included on the subject line if e-mail is used. To help the Commission process and review your comments more efficiently, please use only one method. The Commission will post all comments on the Commission's Internet Web site (*http://www.sec.gov/rules/sro.shtml*). Copies of the submission, all subsequent amendments, all written statements with respect to the proposed rule change that are filed with the Commission, and all written communications relating to the proposed rule change between the Commission and any person, other than those that may be withheld from the public in accordance with the provisions of 5 U.S.C. 552, will be available for inspection and copying in the Commission's Public Reference Room, 100 F Street, NE., Washington, DC 20549, on official business days between the hours of 10 a.m. and 3 p.m. Copies of the filing also will be available for inspection and copying at the principal office of the Exchange. All comments received will be posted without change; the Commission does not edit personal identifying information from submissions. You should submit only information that you wish to make available publicly. All submissions should refer to File Number SR–NYSEArca–2008–136 and should be submitted on or before January 21, 2009.

For the Commission, by the Division of Trading and Markets, pursuant to delegated authority.[11]

Florence E. Harmon,

Acting Secretary.

[FR Doc. E8–31098 Filed 12–30–08; 8:45 am]

BILLING CODE 8011–01–P

[8] 15 U.S.C. 78f(b).

[9] 15 U.S.C. 78f(b)(5).

[10] *See* e-mail from Andrew Stevens, Chief Counsel—U.S. Equities & Derivatives, NYSE Arca, Inc., to Mitra Mehr, Special Counsel, Division of Trading and Markets, Commission, dated December 22, 2008.

[11] 17 CFR 200.30–3(a)(12).

SOCIAL SECURITY ADMINISTRATION

[Docket No. SSA–2008–0064]

Agreement on Social Security Between the United States and the Czech Republic; Entry Into Force

AGENCY: Social Security Administration.

ACTION: Notice.

SUMMARY: On January 1, 2009, an agreement coordinating the United States (U.S.) and the Czech Republic social security programs will enter into force. The agreement with the Czech Republic, which was signed on September 7, 2007, is similar to U.S. social security agreements already in

force with 22 other countries. This agreement is authorized by section 233 of the Social Security Act. 42 U.S.C. 433.

The U.S.-Czech agreement eliminates dual social security coverage—a situation that exists when a worker from one country works in the other country and is covered under the social security systems of both countries for the same work. Without such agreements in force, when dual coverage occurs, the worker or the worker's employer or both may be required to pay social security contributions to the two countries simultaneously. Under the U.S.-Czech agreement, a worker who is sent by an employer in one country to work in the other country for 5 years or less remains covered only by the sending country.

The agreement includes additional rules that eliminate dual U.S. and Czech coverage in other work situations. The agreement also helps eliminate situations where workers suffer a loss of benefit rights because they have divided their careers between the two countries. Under the agreement, workers may qualify for partial U.S. benefits or partial Czech benefits based on combined (totalized) work credits from both countries.

If you want copies of the agreement or want more information about its provisions you may write to the Social Security Administration, Office of International Programs, Post Office Box 17741, Baltimore, MD 21235–7741 or visit the Social Security Web site at *http://www.socialsecurity.gov/international.*

Dated: December 23, 2008.

Michael J. Astrue,

Commissioner of Social Security.

[FR Doc. E8–31136 Filed 12–30–08; 8:45 am]

BILLING CODE 4191–02–P

SOCIAL SECURITY ADMINISTRATION

[Docket No. SSA–2008–0067]

Rate for Assessment on Direct Payment Fees to Representatives in 2009

AGENCY: Social Security Administration (SSA).

ACTION: Notice.

SUMMARY: We are announcing that the assessment percentage rate under sections 206(d) and 1631(d)(2)(C) of the Social Security Act (the Act), 42 U.S.C. 406 (d), and 1383(d)(2)(C) is 6.3 percent for 2009.

FOR FURTHER INFORMATION CONTACT: Gwen Jones Kelley, Acting Associate General Counsel for Program Law, Office of the General Counsel, Social Security Administration, 6401 Security Boulevard, Baltimore, MD 21235–6401. *Phone:* (410) 965–0495, e-mail *Gwen.Jones.Kelley@ssa.gov.*

SUPPLEMENTARY INFORMATION: Section 406 of Public Law No. 106–170, the Ticket to Work and Work Incentives Improvement Act of 1999, established an assessment for the services required to determine and certify payments to attorneys from the benefits due claimants under Title II of the Act. This provision is codified in section 206 of the Act (42 U.S.C. 406). That legislation set the assessment for the calendar year 2000 at 6.3 percent of the amount that would be required to be certified for direct payment to the attorney under sections 206(a)(4) or (b)(1) of the Act before the application of the assessment. For subsequent years, the legislation requires us to determine the percentage rate necessary to achieve full recovery of the costs of determining and certifying fees to attorneys, but not in excess of 6.3 percent. Beginning in 2005, sections 302 and 303 of Public Law No. 108–203, the Social Security Protection Act of 2004 (SSPA), extended the direct payment of fees to attorneys in cases under Title XVI of the Act and to eligible non-attorney representatives in cases under Title II or Title XVI of the Act. Fees directly paid under these provisions are subject to the same assessment. In addition, sections 301 and 302 of the SSPA imposed a dollar cap (i.e., currently $83.00) on the amount of the assessment so that the assessment may not exceed the lesser of that dollar cap or the amount determined using the assessment percentage rate.

Based on the best available data, we have determined that the current rate of 6.3 percent will continue for 2009. We will continue to review our costs for these services on a yearly basis.

Dated: December 19, 2008.

Mary Glenn-Croft,

Deputy Commissioner for Budget, Finance and Management.

[FR Doc. E8–31129 Filed 12–30–08; 8:45 am]

BILLING CODE 4191–02–P

DEPARTMENT OF STATE

[Public Notice 6471]

List of December 31, 2008 of Participating Countries and Entities (Hereinafter Known as ''Participants'') Under the Clean Diamond Trade Act of 2003 (Pub. L. 108–19) and Section 2 of Executive Order 13312 of July 29, 2003

AGENCY: Department of State.

ACTION: Notice.

SUMMARY: In accordance with Sections 3 and 6 of the Clean Diamond Trade Act of 2003 (Pub. L. 108–19) and Section 2 of Executive Order 13312 of July 29, 2003, the Department of State is identifying all the Participants eligible for trade in rough diamonds under the Act, and their respective Importing and Exporting Authorities, and revising the previously published list of September 8, 2008 (73 FR 52073) to add Mexico and delete Cote d'Ivoire.

FOR FURTHER INFORMATION CONTACT: Sue Saarnio, Special Advisor for Conflict Diamonds, Bureau of Economic and Business Affairs, Department of State (202) 647–4108.

SUPPLEMENTARY INFORMATION: Section 4 of the Clean Diamond Trade Act (the ''Act'') requires the President to prohibit the importation into, or the exportation from, the United States of any rough diamond, from whatever source, that has not been controlled through the Kimberley Process Certification Scheme (KPCS). Under Section 3(2) of the Act, ''controlled through the Kimberley Process Certification Scheme'' means an importation from the territory of a Participant or exportation to the territory of a Participant of rough diamonds that is either (i) carried out in accordance with the KPCS, as set forth in regulations promulgated by the President, or (ii) controlled under a system determined by the President to meet substantially the standards, practices, and procedures of the KPCS. The referenced regulations are contained at 31 CFR Part 592 (''Rough Diamonds Control Regulations'') (69 FR 56936, Sept. 23, 2004). Section 6(b) of the Act requires the President to publish in the **Federal Register** a list of all Participants, and all Importing and Exporting Authorities of Participants, and to update the list as necessary. Section 2 of Executive Order 13312 delegates this function to the Secretary of State. Section 3(7) of the Act defines ''Participant'' as a state, customs territory, or regional economic integration organization identified by the Secretary of State. Section 3(3) of the Act defines ''Exporting Authority'' as one or more entities designated by a Participant from whose territory a shipment of rough diamonds is being exported as having the authority to validate a Kimberley Process Certificate. Section 3(4) of the Act defines ''Importing Authority'' as one or more entities designated by a Participant into whose territory a shipment of rough diamonds is imported as having the authority to enforce the laws and

regulations of the Participant regarding imports, including the verification of the Kimberley Process Certificate accompanying the shipment.

List of Participants

Pursuant to Section 3 of the Act, Section 2 of Executive Order 13312, and Delegation of Authority No. 294 (July 6, 2006), I hereby identify the following entities as of November 6, 2008, as Participants under section 6(b) of the Act. Included in this List are the Importing and Exporting Authorities for Participants, as required by Section 6(b) of the Act. This list revises the previously published list of September 8, 2008, to add Mexico to the list of participants in the Kimberley Process Certification Scheme. This list also deletes Cote d'Ivoire, as shipments of rough diamonds from Cote d'Ivoire are not being controlled through the Kimberley Process.

Angola—Ministry of Geology and Mines.

Armenia—Ministry of Trade and Economic Development.

Australia—Exporting Authority—Department of Industry, Tourism and Resources; Importing Authority—Australian Customs Service.

Bangladesh—Ministry of Commerce.

Belarus—Department of Finance.

Botswana—Ministry of Minerals, Energy and Water Resources.

Brazil—Ministry of Mines and Energy.

Canada—Natural Resources Canada.

Central African Republic—Ministry of Energy and Mining.

China—General Administration of Quality Supervision, Inspection and Quarantine.

Democratic Republic of the Congo—Ministry of Mines. Republic of Congo—Ministry of Mines.

Croatia—Ministry of Economy.

European Community—DG/External Relations/A.2.

Ghana—Precious Minerals and Marketing Company Ltd.

Guinea—Ministry of Mines and Geology.

Guyana—Geology and Mines Commission.

India—The Gem and Jewelry Export Promotion Council.

Indonesia—Directorate General of Foreign Trade of the Ministry of Trade.

Israel—The Diamond Controller.

Japan—Ministry of Economy, Trade and Industry.

Republic of Korea—Ministry of Commerce, Industry and Energy.

Laos—Ministry of Finance.

Lebanon—Ministry of Economy and Trade.

Lesotho—Commissioner of Mines and Geology.

Liberia—Ministry of Lands, Mines and Energy.

Malaysia—Ministry of International Trade and Industry.

Mauritius—Ministry of Commerce.

Namibia—Ministry of Mines and Energy.

Mexico—Ministry of the Economy.

New Zealand—Ministry of Foreign Affairs and Trade.

Norway—The Norwegian Goldsmiths' Association.

Russia—Gokhran, Ministry of Finance.

Sierra Leone—Government Gold and Diamond Office.

Singapore—Singapore Customs.

South Africa—South African Diamond Board.

Sri Lanka—National Gem and Jewellery Authority.

Switzerland—State Secretariat for Economic Affairs.

Chinese Taipei—Bureau of Foreign Trade.

Tanzania—Commissioner for Minerals.

Thailand—Ministry of Commerce.

Togo—Ministry of Mines and Geology.

Turkey—Istanbul Gold Exchange.

Ukraine—State Gemological Centre of Ukraine.

United Arab Emirates—Dubai Metals and Commodities Center.

United States of America—Importing Authority—United States Bureau of Customs and Border Protection; Exporting Authority—Bureau of the Census.

Vietnam—Ministry of Trade.

Zimbabwe—Ministry of Mines and Mining Development.

This notice shall be published in the **Federal Register**.

John D. Negroponte,

Deputy Secretary of State, Department of State.

[FR Doc. E8–31151 Filed 12–30–08; 8:45 am]

BILLING CODE 4710–07–P

DEPARTMENT OF TRANSPORTATION

Applications of Baltia Airlines, Inc. for Certificate Authority

AGENCY: Department of Transportation.

ACTION: Notice of Order to Show Cause (Order 2008–12–12) Docket DOT–OST–2007–0007.

SUMMARY: The Department of Transportation is directing all interested persons to show cause why it should not issue an order finding Baltia Airlines, Inc., fit, willing, and able, and awarding it a certificate of public convenience and necessity to engage in foreign scheduled air transportation of persons, property and mail.

DATES: Persons wishing to file objections should do so no later than January 2, 2009.

ADDRESSES: Objections and answers to objections should be filed in Docket DOT–OST–2007–0007 and addressed to U.S. Department of Transportation, Docket Operations, (M–30, Room W12–140), 1200 New Jersey Avenue, SE., West Building Ground Floor, Washington, DC 20590, and should be served upon the parties listed in Attachment A to the order.

FOR FURTHER INFORMATION CONTACT: Damon D. Walker, Air Carrier Fitness Division (X–56, Room W86–465), U.S. Department of Transportation, 1200 New Jersey Avenue, SE., Washington, DC 20590, (202) 366–7785.

Michael W. Reynolds,

Acting Assistant Secretary for Aviation and International Affairs.

[FR Doc. E8–31113 Filed 12–30–08; 8:45 am]

BILLING CODE 4910–9X–P

DEPARTMENT OF TRANSPORTATION

Office of the Secretary

Notice of Applications for Certificates of Public Convenience and Necessity and Foreign Air Carrier Permits Filed Under Subpart B (Formerly Subpart Q) During the Week Ending November 14, 2008

The following Applications for Certificates of Public Convenience and Necessity and Foreign Air Carrier Permits were filed under Subpart B (formerly Subpart Q) of the Department of Transportation's Procedural Regulations (See 14 CFR 301.201 *et seq.*). The due date for Answers, Conforming Applications, or Motions to Modify Scope are set forth below for each application. Following the Answer period DOT may process the application by expedited procedures. Such procedures may consist of the adoption of a show-cause order, a tentative order, or in appropriate cases a final order without further proceedings.

Docket Number: DOT–OST–2008–0340.

Date Filed: November 10, 2008.

Due Date for Answers, Conforming Applications, or Motion to Modify Scope: December 1, 2008.

Description: Application of Solid aiR B.V. (''Solid aiR'') requesting a foreign air carrier permit to the full extent authority by the Air Transport Agreement Between the United States

and the European Community and the Member States of the European Community to enable it to engage in: (i) Foreign charter air transportation of persons and property from any point or points behind any Member State of the European Union via any point or points in any Member State and via intermediate points to any point or points in the United States and beyond; (ii) foreign charter air transportation of persons and property between any point or points in the United States and any point or points in any member of the European Common Aviation Area; (iii) other charters pursuant to the prior approval requirements; and (iv) transportation authorized by an additional route rights made available to European Community carrier in the future. Solid aiR further requests exemption authority to the extent necessary to enable it to provide the services described above pending issuance of a foreign air carrier permit and such additional or other relief.

Docket Number: DOT–OST–1997–2046.

Date Filed: November 13, 2008.

Due Date for Answers, Conforming Applications, or Motion to Modify Scope: December 4, 2008.

Description: Application of United Air Lines, Inc. (United) requesting renewal of its experimental certificate of public convenience and necessity for Route 632, Segment 1 (Sao Paulo, Rio de Janeiro, Brasilia and Belem, Brazil; Barranqulla, Columbia; and Buenos Aires, Argentina) and Segment 6 (Rio de Janeiro, Brazil).

Docket Number: DOT–OST–1997–2911.

Date Filed: November 13, 2008.

Due Date for Answers, Conforming Applications, or Motion to Modify Scope: December 4, 2008.

Description: Application of United Air Lines, Inc. (United) requesting a renewal of the certificate of public convenience and necessity for Route 747, which authorizes United to engage in scheduled foreign air transportation of persons, property and mail between any points in the United States, via intermediate points in third countries, and the conterminal points Johannesburg and Cape Town, South Africa, and beyond South Africa to Harare, Zimbabwe.

Renee V. Wright,

Program Manager, Docket Operations, Federal Register Liaison.

[FR Doc. E8–31194 Filed 12–30–08; 8:45 am]

BILLING CODE 4910–9X–P

DEPARTMENT OF TRANSPORTATION

Office of the Secretary

Aviation Proceedings, Agreements Filed the Week Ending November 14, 2008

The following Agreements were filed with the Department of Transportation under the Sections 412 and 414 of the Federal Aviation Act, as amended (49 U.S.C. 1382 and 1384) and procedures governing proceedings to enforce these provisions. Answers may be filed within 21 days after the filing of the application.

Docket Number: DOT–OST–2008–0341.

Date Filed: November 10, 2008.

Parties: Members of the International Air Transport Association.

Subject: TC31 North & Central Pacific, Areawide Resolutions, (Memo 0459).

Minutes: TC31/TC123 Passenger Tariff Coordinating Conference, TC31 North and Central Pacific Minutes, PTC123 Minutes, (Memo 0466).

Intended effective date: 1 April 2009.

Docket Number: DOT–OST–2008–0342.

Date Filed: November 10, 2008.

Parties: Members of the International Air Transport Association.

Subject: TC31 North & Central Pacific, TC3 (except Japan)—North America, Caribbean (except between Korea (Rep. of), Malaysia and USA), Areawide Resolutions, (Memo 0459).

Minutes: TC31/TC123 Passenger Tariff Coordinating Conference, TC31 North and Central Pacific Minutes, PTC123 Minutes, (Memo 0466).

Technical Correction 1: TC31 North & Central Pacific, TC3 (except Japan)—North America, Caribbean (except between Korea (Rep. of), Malaysia and USA), Areawide Resolutions, (Memo 0467). Technical Correction 2: TC31 North & Central Pacific, TC3 (except Japan)—North America, Caribbean (except between Korea (Rep. of), Malaysia and USA), Areawide Resolutions, (Memo 0469). Intended effective date: 1 April 2009.

Docket Number: DOT–OST–2008–0343.

Date Filed: November 10, 2008.

Parties: Members of the International Air Transport Association.

Subject: TC31 North & Central Pacific, Japan—North America, Caribbean, Resolutions and Specified Fares Tables, (Memo 0461).

Minutes: TC31/TC123 Passenger Tariff Coordinating Conference, TC31 North and Central Pacific Minutes, PTC123 Minutes, (Memo 0466).

Intended effective date: 1 April 2009.

Docket Number: DOT–OST–2008–0344.

Date Filed: November 10, 2008.

Parties: Members of the International Air Transport Association.

Subject: TC31 North & Central Pacific, TC3—Central America, South America, Resolutions and Specified Fares Tables, (Memo 0462).

Minutes: TC31/TC123 Passenger Tariff Coordinating Conference, TC31 North and Central Pacific Minutes, PTC123 Minutes, (Memo 0466).

Intended effective date: 1 April 2009.

Docket Number: DOT–OST–2008–0345.

Date Filed: November 10, 2008.

Parties: Members of the International Air Transport Association.

Subject: TC31 North & Central Pacific, Between Korea (Rep. of), Malaysia) and USA, Resolutions and Specified Fares Tables, (Memo 0463).

Minutes: TC31/TC123 Passenger Tariff Coordinating Conference, TC31 North and Central Pacific Minutes, PTC123 Minutes, (Memo 0466).

Technical Correction: TC31 North & Central Pacific, Between Korea (Rep. of), Malaysia) and USA, (Memo 0468).

Intended effective date: 1 April 2009.

Docket Number: DOT–OST–2008–0346.

Date Filed: November 10, 2008.

Parties: Members of the International Air Transport Association.

Subject: TC123 North Atlantic, (except between USA and Korea, Rep. of, Malaysia), Resolutions and Specified Fares Tables, (Memo 0424).

Minutes: TC31/TC123 Passenger Tariff Coordinating Conference, TC31 North and Central Pacific Minutes, PTC 123 Minutes, (Memo 0433).

Intended effective date: 1 April 2009.

Docket Number: DOT–OST–2008–0347.

Date Filed: November 10, 2008.

Parties: Members of the International Air Transport Association.

Subject: TC123 Mid Atlantic, Resolutions and Specified Fares Tables, (Memo 0425).

Minutes: TC31/TC123 Passenger Tariff Coordinating Conference, TC31 North and Central Pacific Minutes, PTC123 Minutes, (Memo 0433).

Intended effective date: 1 April 2009.

Docket Number: DOT–OST–2008–0348.

Date Filed: November 10, 2008.

Parties: Members of the International Air Transport Association.

Subject: TC123 South Atlantic, Resolutions and Specified Fares Tab, (Memo 0426).

Minutes: TC31/TC123 Passenger Tariff Coordinating Conference, TC31

North and Central Pacific Minutes, PTC123 Minutes, (Memo 0433).

Intended effective date: 1 April 2009.

Docket Number: DOT–OST–2008–0350.

Date Filed: November 12, 2008.

Parties: Members of the International Air Transport Association.

Subject: TC123, Areawide Resolutions, (Memo 0427).

Minutes: TC31/TC123 Passenger Tariff Coordinating Conference, TC31 North and Central Pacific Minutes, PTC123 Minutes, (Memo 0433).

Intended effective date: 1 April 2009.

Docket Number: DOT–OST–2008–0351.

Date Filed: November 12, 2008.

Parties: Members of the International Air Transport Association.

Subject: TC123.

Between Korea (Rep. of), Malaysia and USA Resolutions, (Memo 0428).

Minutes: TC31/TC123 Passenger Tariff Coordinating Conference, TC31 North and Central Pacific Minutes, PTC123 Minutes, (Memo 0433).

Intended effective date: 1 April 2009.

Docket Number: DOT–OST–2008–0352.

Date Filed: November 12, 2008.

Parties: Members of the International Air Transport Association.

Subject: Technical Correction: TC3 Japan, Korea-South East Asia, Except between Korea (Rep. of) and Guam, Northern Mariana Islands, Expedited Resolution 002na, (Memo 1248).

Intended effective date: 15 December 2008.

Renee V. Wright,

Program Manager, Docket Operations, Federal Register Liaison.

[FR Doc. E8–31159 Filed 12–30–08; 8:45 am]

BILLING CODE 4910–9X–P

DEPARTMENT OF TRANSPORTATION

Federal Railroad Administration

Notice of Application for Approval of Discontinuance or Modification of a Railroad Signal System or Relief from the Requirements of Title 49 Code of Federal Regulations Part 236

Pursuant to Title 49 Code of Federal Regulations (CFR) Part 235 and 49 U.S.C. 20502(a), the following railroad has petitioned the Federal Railroad Administration (FRA) seeking approval for the discontinuance or modification of the signal system or relief from the requirements of 49 CFR part 236, as detailed below.

[Docket Number FRA–2008–0144]

Applicant: New York, Susquehanna and Western Railway Corporation, Mr. Nathan R. Fenno, President, 1 Railroad Avenue, Cooperstown, New York 13326.

The New York, Susquehanna and Western Railway Corporation (NYSW) seeks approval of the proposed discontinuance of the Manual Block Territory and establishment of Yard Limit Territory for the SBNY Main track, milepost (MP) 270.20 (W.E. Armory Square Station) to MP 274.45 (End of Track at Carousel Mall); the SBNY Connector track, MP 272.90 (Salt Land Spur Switch) to MP 273.24 (NYSW/CSXT Property Line); and SBNY Runaround, MP 271.20 (#15 Turnout) to MP 273.24 (NYSW/CSXT Property Line), near Syracuse, New York.

The reason given for the proposed changes is that the passenger train service in the area has been terminated, and the freight operations for both the NYSW and CSXT will be improved under the authority of the NYSW dispatcher located in Cooperstown, New York.

Interested parties are invited to participate in these proceedings by submitting written views, data, or comments. FRA does not anticipate scheduling a public hearing in connection with these proceedings since the facts do not appear to warrant a hearing. If any interested party desires an opportunity for oral comment, they should notify FRA, in writing, before the end of the comment period and specify the basis for their request.

All communications concerning these proceedings should identify the appropriate docket number (e.g., Waiver Petition Docket Number FRA–2008–0144) and may be submitted by any of the following methods:

- *Web site: http://www.regulations.gov.* Follow the online instructions for submitting comments.
- *Fax:* 202–493–2251.
- *Mail:* Docket Operations Facility, U.S. Department of Transportation, 1200 New Jersey Avenue, SE., W12–140, Washington, DC 20590.
- *Hand Delivery:* 1200 New Jersey Avenue, SE., Room W12–140, Washington, DC 20590, between 9 a.m. and 5 p.m., Monday through Friday, except Federal holidays.

Communications received within 45 days of the date of this notice will be considered by FRA before final action is taken. Comments received after that date will be considered as far as practicable. All written communications concerning these proceedings are available for examination during regular business hours (9 a.m.–5 p.m.) at the above facility. All documents in the public docket are also available for inspection and copying on the Internet at the docket facility's Web site at *http://www.regulations.gov.*

Anyone is able to search the electronic form of any written communications and comments received into any of our dockets by the name of the individual submitting the comment (or signing the comment, if submitted on behalf of an association, business, labor union, etc.). You may review DOT's complete Privacy Act Statement in the **Federal Register** published on April 11, 2000 (Volume 65, Number 70; Pages 19477–78).

Issued in Washington, DC, on December 23, 2008.

Grady C. Cothen, Jr.,

Deputy Associate Administrator for Safety Standards and Program Development.

[FR Doc. E8–31181 Filed 12–30–08; 8:45 am]

BILLING CODE 4910–06–P

DEPARTMENT OF TRANSPORTATION

Federal Railroad Administration

Petition for Waiver of Compliance

In accordance with Part 211 of Title 49 Code of Federal Regulations (CFR), notice is hereby given that the Federal Railroad Administration (FRA) received a request for a waiver of compliance with certain requirements of its safety standards. The individual petition is described below, including the party seeking relief, the regulatory provisions involved, the nature of the relief being requested, and the petitioner's arguments in favor of relief.

City of Suffolk, Virginia

[Waiver Petition Docket Number FRA–2008–0087]

The City of Suffolk, Virginia (City), seeks a permanent waiver of compliance from certain provisions of the Use of Locomotive Horns at Highway-Rail Grade Crossings, 49 CFR part 222. The City intends to establish a Pre-Rule Quiet Zone that it had previously continued under the provisions of 49 CFR part 222.41(c)(1). The City is seeking a waiver to extend: (1) The mailing date for a Notice of Intent as provided in 49 CFR Part 222.41(c)(2)(i)(A) that states that the Notice of Intent must be mailed by February 24, 2008; and (2) the filing date for a Detailed Plan as provided in 49 CFR part 222.41(c)(2)(i)(B) that states that the Detailed Plan must be filed with FRA by June 24, 2008.

The City states that its failure to meet the required deadlines was a direct result of its inexperience with the FRA's policies and procedures. The City has

dedicated staff to ensure that this oversight will not occur again.

The City states that it is attempting to determine required modifications and make the necessary modifications to the crossing in question to continue the existing locomotive horn sounding restrictions. The City anticipates a cost of $300,000 to $500,000, to make the necessary upgrades in order to be in compliance with FRA regulations.

The City states that it is currently negotiating with the Norfolk Southern Railway Company (NS) to garner its support for the waiver. The City also states that NS will notify FRA if it has an objection. The City decided to file the petition alone in order to expedite the process, and that a joint submission by the City and railroad is not likely to significantly contribute to public safety.

Interested parties are invited to participate in these proceedings by submitting written views, data, or comments. FRA does not anticipate scheduling a public hearing in connection with these proceedings since the facts do not appear to warrant a hearing. If any interested party desires an opportunity for oral comment, they should notify FRA, in writing, before the end of the comment period and specify the basis for their request.

All communications concerning these proceedings should identify the appropriate docket number (e.g., Waiver Petition Docket Number FRA–2008–0087) and may be submitted by any of the following methods:

- *Web site: http://www.regulations.gov.* Follow the online instructions for submitting comments.
- *Fax:* 202–493–2251.
- *Mail:* Docket Operations Facility, U.S. Department of Transportation, 1200 New Jersey Avenue, SE., W12–140, Washington, DC 20590.
- *Hand Delivery:* 1200 New Jersey Avenue, SE., Room W12–140, Washington, DC 20590, between 9 a.m. and 5 p.m., Monday through Friday, except Federal Holidays.

Communications received within 30 days of the date of this notice will be considered by FRA before final action is taken. Comments received after that date will be considered as far as practicable. All written communications concerning these proceedings are available for examination during regular business hours (9 a.m.–5 p.m.) at the above facility. All documents in the public docket are also available for inspection and copying on the Internet at the docket facility's Web site at *http://www.regulations.gov.*

Anyone is able to search the electronic form of any written communications and comments received into any of our dockets by the name of the individual submitting the comment (or signing the comment, if submitted on behalf of an association, business, labor union, etc.). You may review DOT's complete Privacy Act Statement in the **Federal Register** published on April 11, 2000 (Volume 65, Number 70; Pages 19477–78).

Issued in Washington, DC, on December 23, 2008.

Grady C. Cothen, Jr.,

Deputy Associate Administrator for Safety Standards and Program Development.

[FR Doc. E8–31180 Filed 12–30–08; 8:45 am]

BILLING CODE 4910–06–P

DEPARTMENT OF TRANSPORTATION

Maritime Administration

Reports, Forms and Recordkeeping Requirements; Agency Information Collection Activity Under OMB Review

AGENCY: Maritime Administration, DOT.

ACTION: Notice and request for comments.

SUMMARY: In compliance with the Paperwork Reduction Act of 1995, this notice announces that the Information Collection abstracted below has been forwarded to the Office of Management and Budget (OMB) for review and approval. The nature of the information collection is described as well as its expected burden. The **Federal Register** Notice with a 60-day comment period soliciting comments on the following collection of information was published on September 23, 2008. No comments were received.

DATES: Comments must be submitted on or before January 30, 2009.

FOR FURTHER INFORMATION CONTACT: Ruth Develbis, Maritime Administration, 1200 New Jersey Avenue, SE., Washington, DC 20590. Telephone: (202) 366–2314; or e-Mail: *ruth.develbis@dot.gov.* Copies of this collection also can be obtained from that office.

SUPPLEMENTARY INFORMATION: Maritime Administration.

Title: Records Retention Schedule.

OMB Control No.: 2133–0501.

Type of Request: Extension of currently approved collection.

Affective Public: United States shipping companies receiving government financial aid.

Forms: None.

Abstract: Section 801 of the Merchant Marine Act, 1936, as amended (46 U.S.C. 53101, note), requires retention of records pertaining to financial assistance programs for ship construction and ship operations. These records are required to be retained to permit proper financial review of pertinent records at the conclusion of a contract when the contractor was receiving government financial assistance.

Dates: Comments should be submitted on or before March 2, 2009.

Annual Estimated Burden Hours: 50 hours.

ADDRESSES: Send comments to the Office of Information and Regulatory Affairs, Office of Management and Budget, 725 17th Street, NW., Washington, DC 20503, Attention: Maritime Administration Desk Officer.

Comments are invited on: Whether the proposed collection of information is necessary for the proper performance of the functions of the agency, including whether the information will have practical utility; the accuracy of the agency's estimate of the burden of the proposed information collection; ways to enhance the quality, utility and clarity of the information to be collected; and ways to minimize the burden of the collection of information on respondents, including the use of automated collection techniques or other forms of information technology. A comment to OMB is best assured of having its full effect, if OMB receives it within 30 days of publication.

Dated: December 19, 2008.

Leonard Sutter,

Secretary, Maritime Administration.

[FR Doc. E8–31061 Filed 12–30–08; 8:45 am]

BILLING CODE 4910–81–P

DEPARTMENT OF TRANSPORTATION

Surface Transportation Board

[STB Docket No. AB–55 (Sub-No. 692X)]

CSX Transportation, Inc.—Abandonment Exemption—in Niagara County, NY

CSX Transportation, Inc. (CSXT) has filed a notice of exemption under 49 CFR 1152 Subpart F—*Exempt Abandonments* to abandon a 1.06-mile line of railroad, known as the Wurlitzer Industrial Track, on CSXT's Northern Region, Albany Division, Niagara Subdivision, extending from milepost QDJ 0.94 to the end of track at milepost QDJ 2.0, in North Tonawanda, Niagara County, NY. The line traverses United States Postal Service Zip Code 14120.

CSXT has certified that: (1) No local traffic has moved over the line for at least 2 years; (2) any overhead traffic on the line can be rerouted over other lines; (3) no formal complaint filed by a user

of rail service on the line (or by a state or local government entity acting on behalf of such user) regarding cessation of service over the line either is pending with the Board or with any U.S. District Court or has been decided in favor of complainant within the 2-year period; and (4) the requirements of 49 CFR 1105.7 (environmental report), 49 CFR 1105.8 (historic report), 49 CFR 1105.11 (transmittal letter), 49 CFR 1105.12 (newspaper publication), and 49 CFR 1152.50(d)(1) (notice to governmental agencies) have been met.

As a condition to this exemption, any employee adversely affected by the abandonment shall be protected under *Oregon Short Line R. Co.—Abandonment— Goshen,* 360 I.C.C. 91 (1979). To address whether this condition adequately protects affected employees, a petition for partial revocation under 49 U.S.C. 10502(d) must be filed.

Provided no formal expression of intent to file an offer of financial assistance (OFA) has been received, this exemption will be effective on January 31, 2009, unless stayed pending reconsideration. Petitions to stay that do not involve environmental issues,[1] formal expressions of intent to file an OFA under 49 CFR 1152.27(c)(2),[2] and trail use/rail banking requests under 49 CFR 1152.29 must be filed by January 12, 2009. Petitions to reopen or requests for public use conditions under 49 CFR 1152.28 must be filed by January 21, 2009, with the Surface Transportation Board, 395 E Street, SW., Washington, DC 20423–0001.

A copy of any petition filed with the Board should be sent to CSXT's representative: Kathryn R. Barney, 500 Water Street, J–150, Jacksonville, FL 32202.

If the verified notice contains false or misleading information, the exemption is void *ab initio.*

CSXT has filed environmental and historic reports which address the effects, if any, of the abandonment on the environment and historic resources. SEA will issue an environmental assessment (EA) by January 6, 2009. Interested persons may obtain a copy of the EA by writing to SEA (Room 1100, Surface Transportation Board, Washington, DC 20423–0001) or by calling SEA, at (202) 245–0305. [Assistance for the hearing impaired is available through the Federal Information Relay Service (FIRS) at 1–800–877–8339.] Comments on environmental and historic preservation matters must be filed within 15 days after the EA becomes available to the public.

Environmental, historic preservation, public use, or trail use/rail banking conditions will be imposed, where appropriate, in a subsequent decision.

Pursuant to the provisions of 49 CFR 1152.29(e)(2), CSXT shall file a notice of consummation with the Board to signify that it has exercised the authority granted and fully abandoned the line. If consummation has not been effected by CSXT's filing of a notice of consummation by December 31, 2009, and there are no legal or regulatory barriers to consummation, the authority to abandon will automatically expire.

Board decisions and notices are available on our Web site at *http://www.stb.dot.gov.*

Decided: December 22, 2008.

By the Board, David M. Konschnik, Director, Office of Proceedings.

Jeffrey Herzig,

Clearance Clerk.

[FR Doc. E8–30921 Filed 12–30–08; 8:45 am]

BILLING CODE 4915–01–P

[1] The Board will grant a stay if an informed decision on environmental issues (whether raised by a party or by the Board's Section of Environmental Analysis (SEA) in its independent investigation) cannot be made before the exemption's effective date. *See Exemption of Out-of-Service Rail Lines,* 5 I.C.C.2d 377 (1989). Any request for a stay should be filed as soon as possible so that the Board may take appropriate action before the exemption's effective date.

[2] Each OFA must be accompanied by the filing fee, which is currently set at $1,500. *See* 49 CFR 1002.2(f)(25).

DEPARTMENT OF TRANSPORTATION

Surface Transportation Board

[STB Docket No. MC F–21031]

National Express Corporation—Intra-Corporate Family Transaction Exemption

National Express Corporation (NEC), a noncarrier, has filed a verified notice of exemption under the Board's class exemption procedures at 49 CFR 1182.9.[1] NEC seeks to implement the restructuring as part of an overall consolidation of its corporate structure in order to achieve organizational and operational efficiencies and related cost reductions.

Under the transaction, NEC, a Delaware corporation, intends to reorganize its corporate structure by consolidating certain directly and indirectly controlled subsidiaries into a single Delaware limited partnership, Durham School Services, L.P. (DSSLP), a motor passenger carrier. NEC states that it will retain its ultimate ownership and control of DSSLP because it is the sole member of Durham Holding II, L.L.C. and Durham Holding I, L.L.C., respectively, the general partner and limited partner of DSSLP, both noncarriers. The directly and indirectly controlled subsidiaries will provide exempt school bus services pursuant to 49 U.S.C. 13506(a)(1) and limited charter passenger carrier services to the public.

According to NEC, restructuring will involve two stages: (1) Polli Leasing, Inc. will be merged into Reliance Motor Coach Company, Inc., and Murphy Bus Service, Inc. will be merged into Murphy Transportation, Inc.; and (2) Jones School Bus Service, Inc., Reliance Motor Coach Company, Inc., Double A. Transportation, Inc., and Murphy Transportation, Inc. will be merged into DSSLP. NEC states that, after the restructuring, DSSLP will continue to exist while the other directly and indirectly controlled subsidiaries will cease to exist.

The transaction is scheduled to be consummated on or about December 31, 2008, or at least 7 days after the filing date of this notice.

This is a transaction within a corporate family of the type specifically exempted from prior review and approval under 49 CFR 1182.9. NEC states that the transaction will not result in adverse changes in service levels, significant operational changes, or a change in the competitive balance with carriers outside the corporate family. Applicant further states that (1) it will accomplish the reorganization through an Agreement and Plan of Merger entered into by and between the affected entities, and (2) there will be no material effect on employees of the companies involved in the restructuring.

If the verified notice contains false or misleading information, the Board shall summarily revoke the exemption and require divestiture. Petitions to revoke the exemption under 49 U.S.C. 13541(d) may be filed at any time. *See* 49 CFR 1182.9(c).

An original and 10 copies of all pleadings, referring to STB Docket No. MCF–21031, must be filed with the Surface Transportation Board, 395 F Street, SW., Washington, DC 20423–0001. In addition, a copy of each pleading must be served on Thomas W. Wilcox, 401 9th St., NW., Suite 1000, Washington, DC 20004.

[1] The Board exempted intra-corporate family transactions of motor carriers of passengers that do not result in significant operational changes, adverse changes in service levels, or a change in the competitive balance with carriers outside the corporate family in *Class Exemption for Motor Passenger Intra-Corporate Family Transactions,* STB Finance Docket No. 33685 (STB served Feb. 18, 2000.)

Board decisions and notices are available on our Web site at *http://www.stb.gov.*

Decided: December 22, 2008.

By the Board, David M. Konschnik, Director, Office of Proceedings.

Jeffrey Herzig,

Clearance Clerk.

[FR Doc. E8–30953 Filed 12–30–08; 8:45 am]

BILLING CODE 4915–01–P

DEPARTMENT OF TRANSPORTATION

Surface Transportation Board

[STB Finance Docket No. 35205]

US Rail Corporation—Lease and Operation Exemption—Winamac Southern Railway Company and Kokomo Grain Co., Inc.

US Rail Corporation (US Rail), a Class III rail carrier, has filed a verified notice of exemption under 49 CFR 1150.41 to acquire by lease and to operate approximately 58.89 miles of rail lines [1] owned by Winamac Southern Railway Company (WSRY) and Kokomo Grain Co., Inc., located in Indiana: (1) The Bringhurst Line, between milepost 50.1 at Bringhurst and milepost 71.5 at Van Jct. (Logansport); (2) the Kokomo Line, between milepost 74.5 at Eighteenth St. Yard (Logansport) and milepost 97.9 at Kokomo; (3) the Kokomo Belt Line, between milepost 0.0 at E. Markland Ave. (Kokomo) and milepost 1.5 at S. Union St. (Kokomo); and (4) the Amboy Line, between milepost 147.07 at Amboy and milepost 134.48± at Marion.[2]

Pursuant to the lease agreement, US Rail will also obtain incidental trackage rights over 3.0 miles of rail line owned by Toledo, Peoria & Western Railway Corp. (TPW), between milepost 71.5 at Van Jct. (Logansport) and milepost 74.5 at Eighteenth St. Yard (Logansport).[3] US Rail will interchange traffic with: (1) NSR at Marion Goodman Yard and Clymers; (2) TPW at Logansport; and (3) CERA at Kokomo.

US Rail certifies that its projected annual revenues as a result of the transaction will not exceed those that would qualify it as a Class III carrier and further certifies that its projected annual revenues will not exceed $5 million.

The earliest this transaction may be consummated is January 16, 2009, the effective date of the exemption (30 days after the corrected notice exemption was filed).

Pursuant to the Consolidated Appropriations Act, 2008, Pub. L. No. 110–161, § 193, 121 Stat. 1844 (2007), nothing in this decision authorizes the following activities at any solid waste rail transfer facility: Collecting, storing or transferring solid waste outside of its original shipping container; or separating or processing solid waste (including baling, crushing, compacting and shredding). The term ''solid waste'' is defined in section 1004 of the Solid Waste Disposal Act, 42 U.S.C. 6903.

If the verified notice contains false or misleading information, the exemption is void *ab initio.* Petitions to revoke the exemption under 49 U.S.C. 10502(d) may be filed at any time. The filing of a petition to revoke will not automatically stay the effectiveness of the exemption. Petitions for stay must be filed no later than January 9, 2009 (at least 7 days before the exemption becomes effective).

An original and 10 copies of all pleadings, referring to STB Finance Docket No. 35205, must be filed with the Surface Transportation Board, 395 E Street, SW., Washington, DC 20423–0001. In addition, a copy of each pleading must be served on Eric M. Hocky, One Commerce Square, 2005 Market Street, Suite 1910, Philadelphia, PA 19103.

Board decisions and notices are available on our Web site at *http://www.stb.dot.gov.*

Decided: December 22, 2008.

By the Board, David M. Konschnik, Director, Office of Proceedings.

Jeffrey Herzig,

Clearance Clerk.

[FR Doc. E8–31067 Filed 12–30–08; 8:45 am]

BILLING CODE 4915–01–P

[1] Central Railroad Company of Indianapolis (CERA) currently operates the lines, but will no longer after December 31, 2008.

[2] A notice in this docket was originally filed on December 5, 2008. On December 17, 2008, US Rail's representative filed a notice styled a ''corrected'' notice containing a number of revisions to the original notice. In response, the Board halted publication of the original notice scheduled for December 19, 2008. Because the sought revisions are not de minimis in nature, the corrected notice is being served and published as a new notice today.

[3] In *Winamac Southern Railway Company—Trackage Rights Exemption—A. & R. Line, Inc.,* STB Finance Docket No. 35208 (STB served Dec. 24, 2008), WSRY obtained authority to operate pursuant to these same trackage rights to correct an earlier oversight.

DEPARTMENT OF TRANSPORTATION

Surface Transportation Board

[STB Finance Docket No. 35207]

Morristown & Erie Railway Inc., d/b/a Stourbridge Railway—Operation Exemption—Stourbridge Railroad Company

Morristown & Erie Railway Inc., d/b/a Stourbridge Railway (ME d/b/a STRY), a Class III rail carrier, has filed a verified notice of exemption under 49 CFR 1150.41 to operate, pursuant to an agreement with Stourbridge Railroad Company (SBRR), SBRR's approximately 24.80 miles of rail line extending between milepost 0.0 at Lackawaxen, in Pike County, PA, and milepost 24.8 at Honesdale, in Wayne County, PA. The agreement also provides that ME d/b/a STRY will have exclusive passenger operating rights over the line. ME d/b/a STRY will interchange freight with the Central New York Railroad Company at milepost 0.0 at Lackawaxen, PA.

The earliest this transaction can be consummated is January 16, 2009, the effective date of the exemption (30 days after the exemption was filed).

ME d/b/a STRY certifies that its projected annual revenues as a result of the transaction will not result in ME d/b/a STRY's becoming a Class II or Class I rail carrier and that its projected annual revenues will not exceed $5 million.

Pursuant to the Consolidated Appropriations Act, 2008, Public Law No. 110–161, § 193, 121 Stat. 1844 (2007), nothing in this decision authorizes the following activities at any solid waste rail transfer facility: collecting, storing, or transferring solid waste outside of its original shipping container; or separating or processing solid waste (including baling, crushing, compacting, and shredding). The term ''solid waste'' is defined in section 1004 of the Solid Waste Disposal Act, 42 U.S.C. 6903.

If the verified notice contains false or misleading information, the exemption is void *ab initio.* Petitions to revoke the exemption under 49 U.S.C. 10502(d) may be filed at any time. The filing of a petition to revoke will not automatically stay the effectiveness of the exemption. Stay petitions must be filed by January 9, 2009 (at least 7 days before the exemption becomes effective).

An original and 10 copies of all pleadings, referring to STB Finance Docket No. 35207, must be filed with the Surface Transportation Board, 395 E Street, SW., Washington, DC 20423–

0001. In addition, a copy of each pleading must be served on John K. Fiorilla, Esq., Capehart & Scatchard, P.A., 8000 Midlantic Drive, Suite 300S, Mount Laurel, NJ 08054.

Board decisions and notices are available on our Web site at *http://www.stb.dot.gov.*

Decided: December 22, 2008.

By the Board, David M. Konschnik, Director, Office of Proceedings.

Jeffrey Herzig,

Clearance Clerk.

[FR Doc. E8–31017 Filed 12–30–08; 8:45 am]

BILLING CODE 4915–01–P

DEPARTMENT OF THE TREASURY

Office of the Secretary

List of Countries Requiring Cooperation With an International Boycott

In order to comply with the mandate of section 999(a)(3) of the Internal Revenue Code of 1986, the Department of the Treasury is publishing a current list of countries which require or may require participation in, or cooperation with, an international boycott (within the meaning of section 999(b)(3) of the Internal Revenue Code of 1986).

On the basis of the best information currently available to the Department of the Treasury, the following countries require or may require participation in, or cooperation with, an international boycott (within the meaning of section 999(b)(3) of the Internal Revenue Code of 1986).

Kuwait

Lebanon

Libya

Qatar

Saudi Arabia

Syria

United Arab Emirates

Yemen, Republic of

Iraq is not included in this list, but its status with respect to future lists remains under review by the Department of the Treasury.

Dated: December 19, 2008.

John L. Harrington,

International Tax Counsel (Tax Policy).

[FR Doc. E8–30877 Filed 12–30–08; 8:45 am]

BILLING CODE 4810–25–M

DEPARTMENT OF THE TREASURY

Open Meeting of the Advisory Committee on the Ten-Year Framework for Energy and Environment

AGENCY: Office of the Special Envoy to China and the SED, Department of the Treasury.

ACTION: Notice of meeting.

SUMMARY: The Department of Treasury's Advisory Committee on the Ten-Year Framework for Energy and Environment will convene its first meeting on Thursday, January 15, 2009, in the Large Conference Room of the main Department Building, 1500 Pennsylvania Avenue, NW., Washington, DC, beginning at 2:30 p.m. Eastern Time. The meeting will be open to the public.

DATES: The meeting will be held on Thursday, January 15, 2009 at 2:30 p.m. Eastern Time.

ADDRESSES: The Advisory Committee will convene its first meeting in the Large Conference Room of the Main Department Building, 1500 Pennsylvania Avenue, NW., Washington, DC. The public is invited to submit written statements with the Advisory Committee by any of the following methods:

Electronic Statements

• Please use the following e-mail address to submit electronic copies of your written statements: *SED.TYF@do.treas.gov.*

Paper Statements

• Send paper statements in triplicate to Advisory Committee on the Ten-Year Framework for Energy and Environment, Office of the Special Envoy to China and the SED, Room 1308, Department of Treasury, 1500 Pennsylvania Avenue, NW., Washington, DC 20220.

In general, the Department will also make such statements available for public inspection and copying in the Department's Library, Room 1428, Main Department Building, 1500 Pennsylvania Avenue, NW., Washington, DC 20220, on official business days between the hours of 10 a.m. and 5 p.m. Eastern Time. You can make an appointment to inspect statements by telephoning (202) 622–0990. All statements, including attachments and other supporting materials, received are part of the public record and subject to public disclosure. You should submit only information you wish to make available publicly.

FOR FURTHER INFORMATION CONTACT: Casey Delhotal, Environmental and Economic Policy Advisor to the SED, Department of Treasury, 1500 Pennsylvania Avenue, NW., Washington, DC 20220, at (202) 622–6780.

SUPPLEMENTARY INFORMATION: In accordance with section 10(a) of the Federal Advisory Committee Act, 5 U.S.C. App. II, section 10(a), and the regulations thereunder, Katherine Casey Delhotal, Designated Federal Officer of the Advisory Committee, has ordered publication of this notice that the Advisory Committee will convene its first meeting on Thursday, January 15, 2009, in the Large Conference Room in the Main Department Building, 1500 Pennsylvania Avenue, NW., Washington, DC 20220 beginning at 2:30 p.m. Eastern Time. The meeting will be open to the public. Because the meeting will be held in a secured facility, members of the public who plan to attend the meeting must contact the Office of the Special Envoy to China and the SED at (202) 622–6780, by 5 p.m. Eastern Time on January 7th, 2009, to inform the Department of the desire to attend the meeting and to provide the information that will be required to facilitate entry into the Main Department Building. The purpose of this meeting is to discuss general organizational matters of the Advisory Committee and begin discussing the issues impacting the Ten-Year Framework on Energy and Environment.

Dated: December 22, 2008.

Lindsay Valdeon,

Deputy Executive Secretary, Treasury Department.

[FR Doc. E8–31065 Filed 12–30–08; 8:45 am]

BILLING CODE 4810–25–P

DEPARTMENT OF THE TREASURY

Office of Foreign Assets Control

Additional Designation of Entities Pursuant to Executive Order 13382

AGENCY: Office of Foreign Assets Control, Treasury.

ACTION: Notice.

SUMMARY: The Treasury Department's Office of Foreign Assets Control (''OFAC'') is publishing the names of two newly designated entities whose property and interests in property are blocked pursuant to Executive Order 13382 of June 28, 2005, ''Blocking Property of Weapons of Mass Destruction Proliferators and Their Supporters.''

DATES: The designation by the Director of OFAC of the two entities identified in

this notice pursuant to Executive Order 13382 is effective on December 17, 2008.

FOR FURTHER INFORMATION CONTACT: Assistant Director, Compliance Outreach & Implementation, Office of Foreign Assets Control, Department of the Treasury. Washington, DC 20220, tel.: (202) 622–2490.

SUPPLEMENTARY INFORMATION:

Electronic and Facsimile Availability

This document and additional information concerning OFAC are available from OFAC's Web site (*http://www.treas.gov/offices/enforcement/ofac*) or via facsimile through a 24-hour fax-on demand service, tel.: (202) 622–0077.

Background:

On June 28, 2005, the President, invoking the authority, *inter alia*, of the International Emergency Economic Powers Act (50 U.S.C. 1701–1706) (''IEEPA''), issued Executive Order 13382 (70 FR 38567, July 1, 2005) (the ''Order''), effective at 12:01 a.m. eastern daylight time on June 29, 2005. In the Order, the President took additional steps with respect to the national emergency described and declared in Executive Order 12938 of November 14, 1994, regarding the proliferation of weapons of mass destruction and the means of delivering them.

Section 1 of the Order blocks, with certain exceptions, all property and interests in property that are in the United States, or that hereafter come within the United States or that are or hereafter come within the possession or control of United States persons, of: (1) The persons listed in an Annex to the Order; (2) any foreign person determined by the Secretary of State, in consultation with the Secretary of the Treasury, the Attorney General, and other relevant agencies, to have engaged, or attempted to engage, in activities or transactions that have materially contributed to, or pose a risk of materially contributing to, the proliferation of weapons of mass destruction or their means of delivery (including missiles capable of delivering such weapons), including any efforts to manufacture, acquire, possess, develop, transport, transfer or use such items, by any person or foreign country of proliferation concern; (3) any person determined by the Secretary of the Treasury, in consultation with the Secretary of State, the Attorney General, and other relevant agencies, to have provided, or attempted to provide, financial, material, technological or other support for, or goods or services in support of, any activity or transaction described in clause (2) above or any person whose property and interests in property are blocked pursuant to the Order; and (4) any person determined by the Secretary of the Treasury, in consultation with the Secretary of State, the Attorney General, and other relevant agencies, to be owned or controlled by, or acting or purporting to act for or on behalf of, directly or indirectly, any person whose property and interests in property are blocked pursuant to the Order.

On December 17, 2008, the Director of OFAC, in consultation with the Departments of State, Justice, and other relevant agencies, designated two entities whose property and interests in property are blocked pursuant to Executive Order 13382.

The list of additional designees is as follows:

1. ASSA CORP (a.k.a. ''ASSA''), New York, New York, Tax ID No. 1368932, United States [NPWMD].

2. ASSA CO. LTD., 6 Britania Place, Bath Street, St. Helier JE2 4SU, Jersey [NPWMD].

Dated: December 23, 2008.

Adam Szubin,

Director, Office of Foreign Assets Control.

[FR Doc. E8–31125 Filed 12–30–08; 8:45 am]

BILLING CODE 4811–45–P

Federal Register

Wednesday,
December 31, 2008

Part II

Department of Commerce

National Oceanic and Atmospheric Administration

50 CFR Part 660

Magnuson-Stevens Act Provisions; Fisheries Off West Coast States; Pacific Coast Groundfish Fishery; 2009–2010 Biennial Specifications and Management Measures; Proposed Rule

DEPARTMENT OF COMMERCE

National Oceanic and Atmospheric Administration

50 CFR Part 660

[Docket No. 0809121213–81246–01]

RIN 0648–AX24

Magnuson-Stevens Act Provisions; Fisheries Off West Coast States; Pacific Coast Groundfish Fishery; 2009–2010 Biennial Specifications and Management Measures

AGENCY: National Marine Fisheries Service (NMFS), National Oceanic and Atmospheric Administration (NOAA), Commerce.

ACTION: Proposed rule; request for comments.

SUMMARY: NMFS proposes a rule to set the 2009–2010 harvest specifications and management measures for groundfish taken in the U.S. exclusive economic zone (EEZ) off the coasts of Washington, Oregon, and California and to revise rebuilding plans for four of the seven overfished rockfish species, consistent with the Mangunson-Stevens Fishery Conservation and Management Act and the Pacific Coast Groundfish Fishery Management Plan. Together, the revisions to rebuilding plans and the 2007–2008 harvest specifications and management measures are intended to rebuild overfished stocks as soon as possible, taking into account the status and biology of the stocks, the needs of fishing communities, and the interaction of the overfished stocks within the marine environment.

DATES: Comments on this proposed rule must be received no later than 5 p.m., local time on January 30, 2009.

ADDRESSES: You may submit comments, identified by RIN 0648–AX24 by any one of the following methods:

- *Electronic Submissions:* Submit all electronic public comments via the Federal eRulemaking Portal *http://www.regulations.gov.*
- *Fax:* 206–526–6736, Attn: Gretchen Arentzen
- *Mail:* D. Robert Lohn, Administrator, Northwest Region, NMFS, 7600 Sand Point Way NE, Seattle, WA 98115–0070, Attn: Gretchen Arentzen.

Instructions: All comments received are a part of the public record and will generally be posted to *http://www.regulations.gov* without change. All Personal Identifying Information (for example, name, address, etc.) voluntarily submitted by the commenter may be publicly accessible. Do not submit Confidential Business Information or otherwise sensitive or protected information.

NMFS will accept anonymous comments. Attachments to electronic comments will be accepted in Microsoft Word, Excel, WordPerfect, or Adobe PDF file formats only.

FOR FURTHER INFORMATION CONTACT: Gretchen Arentzen (Northwest Region, NMFS), phone: 206–526–6147, fax: 206–526–6736 and e-mail *gretchen.arentzen@noaa.gov.*

SUPPLEMENTARY INFORMATION:

Electronic Access

This proposed rule is accessible via the Internet at the Office of the Federal Register's Web site at *http://www.gpoaccess.gov/fr/index.html.* Background information and documents are available at the Pacific Fishery Management Council's Web site at *http://www.pcouncil.org/.*

Background

The amount of each Pacific Coast groundfish species or species group that is available for harvest in a specific year is referred to as a harvest specification. Harvest specifications include acceptable biological catches (ABCs), optimum yields (OYs), and harvest guidelines (HGs). Harvest specifications may also include ''set-asides'' of harvestable amounts of fish.

The ABC is a biologically based estimate of the amount of fish that may be harvested each year without affecting the sustainability of the resource. The ABC may be modified with precautionary adjustments to account for uncertainty. An OY is a target harvest level for a species or species groups. The OYs may be set equal to the ABC for the species or species group, but are often set lower as a precautionary measure. The Council's policies on setting ABCs, OYs, and other harvest specifications are discussed later in the preamble to this proposed rule. Proposed harvest specifications for 2009–2010 are provided in Tables 1a through 2c.

Management measures being proposed for 2009–2010 work in combination with the existing regulations to create a management structure that is intended to constrain fishing so the catch of overfished groundfish species does not exceed the rebuilding-based OYs while allowing, to the extent practicable, the OYs for healthier groundfish stocks that co-occur with the overfished stocks to be achieved. In order to rebuild overfished species, allowable harvest levels of healthy species will only be achieved where such harvest will not deter rebuilding of overfished stocks. Routine management measures for the commercial fisheries include: Bycatch limits, trip and cumulative landing limits, time/area closures, size limits, and gear restrictions. Routine management measures for the recreational fisheries include bag limits, size limits, gear restrictions, fish dressing requirements, and time/area closures. Routine management measures are used to modify fishing behavior during the fishing year to allow a harvest specification to be achieved, or to prevent a harvest specification from being exceeded. The groundfish fishery is managed with a variety of other regulatory requirements that are not considered routine, and which are outside of this rulemaking and found at 50 CFR 660, subpart G. The regulations at 50 CFR 660, subpart G include, but are not limited to: Long-term harvest allocations; recordkeeping and reporting requirements; monitoring requirements; license limitation programs; and essential fish habitat (EFH) protection measures. Together the routine management measures and regulations at 50 CFR 660, subpart G are used to manage the Pacific Coast groundfish fishery to stay within the harvest specifications identified in the rulemaking.

The Pacific Coast Groundfish Fishery Management Plan (FMP) requires the Council to set harvest specifications and management measures for groundfish at least biennially. This proposed rule would set 2009–2010 harvest specifications and management measures for all of the 90 plus groundfish species or species groups managed under the Pacific Coast Groundfish FMP, except for Pacific whiting. Pacific whiting harvest specifications are proposed as a range in this action. The Council will consider final Pacific whiting specifications after new stock assessments are prepared at the beginning of each year. The final specifications for 2009 and 2010 will be announced following the March 2009 and March 2010 Council meetings, respectively.

There are seven Pacific Coast groundfish species that are currently being managed under rebuilding plans established in Amendment 16–4 to the FMP. Amendment 16–4 was developed and approved to respond to the decision in *Natural Resources Defense Council* v. *NMFS,* 421 F.3d 872 (9th Cir. 2005) [hereinafter *NRDC* v. *NMFS*]. The overfished species are: Bocaccio, canary rockfish, cowcod, darkblotched rockfish, Pacific Ocean Perch (POP), widow rockfish, and yelloweye rockfish.

This action proposes to revise rebuilding plans for four of the seven overfished groundfish species (canary rockfish, darkblotched rockfish, cowcod, and yelloweye rockfish), consistent with the approach taken in Amendment 16–4, by revising target rebuilding dates and/or harvest rates specified in Federal regulations at 50 CFR 660.365.

The focus of the preamble discussion is the Council's ABC and OY policies for 2009 and 2010, new harvest specifications, new fishery specific management measures, and other issues related to the management of the Pacific Coast groundfish fishery in 2009 and 2010. Preambles to prior proposed rules have more thoroughly discussed bycatch accounting and reduction measures (See 67 FR 1555, January 11, 2002; 68 FR 936, January 7, 2003; 69 FR 1380, January 8, 2004; 69 FR 56563, September 21, 2004 for historical information on the bycatch model). On June 27, 2006, NMFS published a proposed rule to implement Amendment 18 to the FMP on bycatch mitigation (71 FR 36506.) The preamble to the Amendment 18 proposed rule discussed NMFS and Council bycatch accounting and mitigation policies, programs, and regulations. The preamble for the 2007 and 2008 harvest specifications and management measures fully described a new approach to overfished species management that was taken by NMFS, the Council, and state and tribal partners in light of *NRDC* v. *NMFS* (71 FR 57764, September 29, 2006). The same approach has been followed in this rulemaking. Issues that were thoroughly discussed in previous rulemakings will only be briefly discussed in this preamble as they pertain to 2009–2010 fisheries. On December 2005, NMFS published a final EIS on the designation of groundfish EFH and minimization of adverse fishing effects on EFH. (*http://www.nwr.noaa.gov/Groundfish-Halibut/Groundfish-Fishery-Management/NEPA-Documents/EFH/-Final-EIS.cfm*). The final EFH EIS provides information on the interactions of groundfish species with their physical environment. Amendment 16–4 and the 2007–2008 groundfish specifications and management measures expand upon the EFH EIS's analysis to analyze the interactions of groundfish species with each other and with other marine species within the California Current ecosystem.

Consistent with the FMP, the socio-economic effects of this action on communities were analyzed to provide guidance on the effects of the action on fishing communities. Fishing communities need a sustainable fishery that is safe, well managed, and profitable, that provides jobs and incomes, that contributes to the local social fabric, culture, and image of the community, and helps market the community and its services and products. In its 2007–2008 recommendations for overfished species rebuilding plans and groundfish specifications and management measures, the Council was clear that it did not expect fishing community needs could be met. The Council took the needs of communities into account as it analyzed different rebuilding plans and management measures alternatives. As a result, the rebuilding plans, groundfish specifications and management measures recommended by the Council and adopted for 2007–2008 were expected to allow fishing businesses and communities to operate at a level that would provide for the continued existence of those fishing businesses and communities and would only allow opportunities for economic growth or profit if they were consistent with the adopted rebuilding policies. In many instances the harvests of healthy stocks were curtailed by the projected effects on overfished species. The Council used this same approach in the development of the 2009 and 2010 specifications and management measures.

Further discussion on how the needs of fishing communities were taken into account can be found in the preamble to the proposed rule for the 2007–2008 specifications and management measures (71 FR 57765, September 29, 2006). The supporting DEIS for this action assesses, through the analysis of several rebuilding alternatives, the needs of groundfish fishing communities, the dependence of fishing communities on overfished species, and the vulnerability of fishing communities to further near-term reductions in groundfish harvest.

Management Measure Approach

In considering the effects of the action on fishing communities, the effects of inseason fishery management changes on fishing communities were considered. At the start of each biennial management cycle, NMFS and the Council establish fishery management measures that are expected to allow fishers to harvest as much of the healthy species OYs as possible without exceeding allowable harvest levels for co-occurring overfished species. These management measures are set using the best scientific information available at the time. However, as catch data and new scientific information may become available during the fishing year, NMFS and the Council's knowledge may change. Catch data vary in quality and abundance both before and during the season, and catch of the most constraining overfished species may also occur in fisheries not managed under the Pacific Coast groundfish FMP. Managing a coastwide fishery to ensure that OYs of overfished species are not exceeded is particularly difficult because of the low OY levels. If new information received during the season reveals that landings are occurring at a faster pace than were initially anticipated, management action would be needed to keep the harvest of healthy stocks and the incidental catch of overfished species at or below their specified OYs. If these inseason adjustments to management measures are dramatic, such as an early closure of a fishery, then the effects of management actions on the fishing communities can be severe.

To prevent major inseason fluctuations in available harvest, the 2009–2010 harvest levels account for uncertainty in order to minimize the potential need for dramatic inseason measures. In other words, currently available scientific information is used to design management measures that are projected to result in overfished species harvest levels that are somewhat lower than their OYs. This practice provides a buffer to account for both scientific uncertainty and unexpected occurrences. In general, a buffer helps prevent OYs from being exceeded. Even with these safeguards, information that becomes available during the 2009–2010 fishing year may reveal that previously set management measures need to be revised inseason. If that is the case, management measures will be appropriately adjusted inseason to keep harvest from exceeding OYs.

Specification and Management Measure Development Process

The process for setting biennial specifications begins with stock assessments to evaluate the status of the groundfish stocks or stock complexes. After being prepared by a stock assessment scientist, each stock assessment is reviewed by the Council's stock assessment review (STAR) team as well as the Council's Scientific and Statistical Committee (SSC). The SSC reviews the stock assessments and provides guidance to the Council relative to the stock assessment's suitability for use in groundfish fishery management decision making. The SSC also endorses the assessments and identifies if they are the ''best available science'' on the stock's status. During

the review process for the 2009–2010 stock assessments, the SSC indicated that the current stock assessments were more thorough and of a higher quality than those used in the previous management cycles. At its June, September and November 2007 meetings, the Council reviewed the new stock assessments, stock assessment updates and rebuilding analyses, and made recommendations regarding the use of the various stock assessments for setting the 2009–2010 specifications. No new species were identified as overfished or approaching an overfished condition.

At its November 2007 meeting, the Council adopted initial fishery specifications based on the new assessments and rebuilding analyses. These recommendations included preliminary ABCs and ranges of OYs for most groundfish species, and where possible, preferred OYs. As a result of the new stock assessments, the SSC recommended that the Council consider revisions to three overfished species rebuilding plans: Canary rockfish; darkblotched rockfish; and cowcod. At this same meeting, the Council provided a variety of potential management measures to be considered for the 2009–2010 fisheries. Over winter, the Council's advisory bodies met to discuss and analyze the Council's preliminary fishery specifications and potential management measures based on the initial specifications.

At its April 2008 meeting, the Council identified its preferred final 2009 and 2010 ABCs for all groundfish species and species complexes; identified preliminary preferred OYs for most managed groundfish species and species complexes; adopted revised rebuilding plans for canary rockfish, cowcod, and darkblotched rockfish; and recommended a range of 2009–2010 groundfish management measure alternatives for analysis that were designed to keep catch levels within the final preferred OYs. The newly adopted rebuilding analyses were used to develop ranges of OY alternatives for canary rockfish, cowcod, and darkblotched rockfish, while the previously adopted rebuilding plans were used for the remaining overfished species. For each individual overfished species a range of OY alternatives was described by the target year to rebuild (T_{TARGET}), median time to rebuild, a spawning potential ratio (SPR = the ratio of the equilibrium spawning output per recruit under fished conditions to the spawning output per recruit under no fishing), the maximum time to rebuild (T_{MAX}), and probability of rebuilding by T_{MAX} (P_{MAX}). An OY alternative that eliminated fishing-related mortality beginning in 2009 ($T_{F=0}$) was considered for each overfished species. By developing individual overfished species OY, the tradeoffs between the amount of allowable harvest, alternative rebuilding periods, and fishing constraints relative to a particular overfished species could be identified.

Prior to 2007, the Council was provided with analyses on preferred OYs for each overfished species in isolation from other species rather than considering how different overfished species OYs might affect or constrain other overfished species. Beginning with Amendment 16–4 and the 2007 and 2008 specifications and management measures and continued for 2009 and 2010, individual overfished species OYs were integrated into rebuilding OYs that more explicitly took the interaction of the overfished species within the marine ecosystem into consideration. The interrelated nature of Pacific Coast groundfish stocks makes this consideration necessary. The degree of interaction between overfished species and other stocks is such that ''rebuilding as quickly as possible while taking into account the needs of fishing communities'' is not possible based solely on a species-by-species approach. To consider the needs of the fishing communities and the status and biology of the stocks, the 2009 and 2010 specifications for overfished species were considered in an integrated manner as was done in 2007 and 2008.

To build integrated rebuilding OY alternatives, the individual overfished species OYs were arranged in strategic combinations that could be analyzed to assess how changes in harvest availability of the various overfished species would constrain fishing opportunities by sector, north and south of 40°10′ N. lat. (N. lat.), and on the continental shelf and slope. The rebuilding OY alternatives were arranged to show how fishing opportunities may be constrained by sector (or gear type) and region along the West Coast, depending on the amount of allowable harvest of each species. By adopting a suite of OYs for overfished species in April 2008, the Council was provided the opportunity to take a realistic look at minimal harvest levels that would rebuild as quickly as possible taking into account the status and biology of the stocks and extractive scientific take of overfished stocks. The rebuilding OY ranges recommended by the Council at its April 2008 meeting provided a starting point for more detailed analysis which was presented to the Council at its June 2008 meeting. Final recommendations on the rebuilding OYs and the management measures needed to keep fishery harvests within the OYs were presented at the Council's June 2008 meeting. The rebuilding alternatives that were considered and Council recommendations are further discussed in the OY Policies and Rebuilding Parameters for Overfished Species section of this preamble.

In summary, when making its final recommendations for rebuilding optimum yields (OYs) for 2009–2010, the Council took into account the status and biology of the stocks by looking for the shortest possible rebuilding periods within a suite of management measures that provided the greatest reduction in catch of the most sensitive and lowest productivity species. The Council took the needs of fishing communities into account by providing fishing opportunities where such opportunities would have a minimal effect on rebuilding periods for stocks with higher productivity, and by recommending restrictive management measures focused on stocks with the lowest productivity levels.

ABC Policy

The Council develops annual estimates of the ABC for major groundfish stocks. When setting the 2009 and 2010 ABCs, three categories of species were identified. The first were those species for which quantitative stock assessments can be conducted because there is adequate data. Stock assessments (a biological evaluation of the condition of a stock or stock complex) are used to estimate the population status of each assessed stock relative to its unfished biomass level. Stock assessments were used to estimate the current level of the abundance, changes in abundance over time, depletion levels relative to an unfished state, fishing mortality, mortality from other causes, and how changes in harvest levels are likely to affect the stock's abundance. The second category included species for which some biological indicators are available, but are not sufficient to support a quantitative analysis. The third category included minor species which are caught, but where the only available information is on the landed biomass.

For 2009 and 2010, the Council maintained a policy of using a default harvest rate as a proxy for the fishing mortality rate that is expected to achieve the maximum sustainable yield (F_{MSY}). A proxy is used because there is insufficient information for most Pacific Coast groundfish stocks. In 2009 and 2010, the following default harvest rate

proxies, based on the Council's SSC recommendations, were used: $F_{40\%}$ for flatfish and Pacific Whiting, $F_{50\%}$ for rockfish (including thornyheads), and $F_{45\%}$ for other groundfish such as sablefish and lingcod. The ABCs for groundfish species or species groups are derived by solving for the fishery removals resulting in an SPR equal to the harvest rate proxy.

A rate of $F_{40\%}$ can be explained as that which reduces the SPR to 40 percent and is therefore a more aggressive rate than $F_{45\%}$ or $F_{50\%}$. The FMP allows default harvest rate proxies to be modified as scientific knowledge improves for a particular species. A fishing mortality or harvest rate will mean different things for different stocks, depending on the productivity of a particular species. For highly productive species (those with individuals that grow and mature quickly and produce many young that survive to an age where they are caught in the fishery) a higher fishing mortality rate may be used, such as $F_{40\%}$. Fishing mortality rate policies must account for several complicating factors, including the capacity of mature individuals to produce young over time and the optimal stock size necessary for the highest level of productivity within that stock.

For some groundfish species, there is little or no detailed biological data available on which to base ABCs, and therefore only rudimentary stock assessments have been prepared; for other species, no stock assessments have been prepared and the ABC levels were based on historical landings. Since 2000, the Council has applied a more precautionary policy when setting ABCs for species with only rudimentary or no stock assessments. The ABC policy prior to 2000 had been to assume that fishing mortality was equal to natural mortality (F=M); the current policy is to assume that fishing mortality is 75 percent of natural mortality (F=0.75M).

2009–2010 Groundfish ABCs

A biennial management cycle for setting harvest specifications and management measures was implemented in 2004 and biennial specification were first established for the 2005 and 2006 management cycle. During the first year in a biennial cycle, new stock assessments are prepared and the results of the new assessments are reviewed by the Council and adopted for use. In some cases, a stock assessment needs to be refined and the final assessment may not be reviewed by the Council and adopted for use until later in the first year or early in the second year of the biennial cycle.

To estimate stock abundance and population trends, each stock assessment relies on various types and sources of information with the principal information coming from the commercial and recreational fisheries themselves. For example, basic fishery dependent data for stock assessments includes the amount of fish caught, the individual sizes of the fish and their biological characteristics (*e.g.*, age, maturity, sex), and the ratio of fish caught to the time spent fishing (catch-per-unit-of-effort). In addition to fishery dependent data, fishery independent data for stock assessments are collected during scientific research surveys. In addition, Pacific Coast groundfish stock assessments identify areas of uncertainty and modeling difficulties. When data are lacking for a particular species, it can result in uncertainty and modeling problems for the stock assessment scientists.

In preparation for setting new ABC values for 2009 and 2010, 15 stock assessments were prepared. Full stock assessments, those that consider the appropriateness of the assessment model and that revise the model as necessary, were prepared for the following stocks: Sablefish; longnose skate; cowcod south of 36°00′ N. lat. (Conception area); blue rockfish south of 42°00′ N. lat.; black rockfish north of Cape Falcon (46°16′ N. lat.); black rockfish south of 46°16′ N. lat.; canary rockfish; chilipepper rockfish off California and Oregon; darkblotched rockfish north of 36°00′ N. lat.; and arrowtooth flounder. Stock assessment updates, those that run new data through an existing model without changing the model, were prepared for: English sole; widow rockfish; bocaccio south of 40°30′ N. lat. (Cape Mendocino); POP north of 40°30′ N. lat.; and yelloweye. In addition to the 15 stock assessments, an academic exercise was conducted that investigated fluctuations in the shortbelly rockfish biomass through the use of a population model based on standard methodology and a variety of both traditional and untraditional data.

Each new stock assessment includes a base model which is accepted by the reviewers. Because it is essential that uncertainty in the analysis be captured and transmitted to decision makers, alternative models are developed from the base model by bracketing the dominant dimension of uncertainty (*e.g.*, stock-recruitment steepness or R_0, natural mortality rate, survey catchability, recent year-class strength, weights on conflicting CPUE series, etc.) Alternative models show the contrast in management implications. Once a base model has been bracketed on either side by alternative model scenarios, which capture the overall degree of uncertainty in the assessment, a 2-way decision table analysis (states-of-nature versus management action) is used to present the repercussions of uncertainty. The SSC makes recommendations to the Council on the appropriateness of using the different stock assessments for management purposes, after which the Council considers adoption of the stock assessments, use of the stock assessment for the development of rebuilding analysis, and the ABCs resulting from the base model runs of the stock assessments.

Species that had ABCs in 2007 and 2008 continue to have ABCs in 2009 and 2010. Blue rockfish and longnose skate had been part of species complexes because they were less rigorously assessed. These two stocks have now had more quantitative stock assessments prepared. As a result of the new assessment, longnose skate is being removed from the other species complex and assigned species specific ABC values for the 2009 and 2010 management cycle. However, blue rockfish will remain within the minor rockfish species group and its ABC contribution will revise the ABC values specified for the complex.

For species that did not have new stock assessments prepared, the Council considered a single ABC derived from the base model of the most recent stock assessment or continued to use the results of rudimentary stock assessments, or the historical landings data. Species or species complexes without new stock assessments include: Lingcod; Pacific cod; cabezon; Dover sole; petrale sole; starry flounder; splitnose rockfish; yellowtail; shortspine thornyhead; longspine thornyhead; California scorpionfish; minor rockfish north of 40°10′ N. lat. minor rockfish south of 40°10′ N. lat.; ''other flatfish; and ''other fish''. Specific information on species without any new stock assessment information are provided in the footnotes to Table 1a and Table 2a in the proposed regulations. The stock assessment cycle and the process for adoption of a final ABC for Pacific whiting are detailed below.

Species that are not overfished and had new stock assessments or stock assessment updates prepared and adopted for use in setting harvest specifications by the Council include: Sablefish; arrowtooth flounder; English sole; chilipepper rockfish; black rockfish north of 46°16′ N. lat. (Cape Falcon); black Rockfish south of 46°16′ N. lat.; longnose skate; and blue

rockfish. Specific information on the ABCs for species that are not overfished and have new stock assessments or assessment updates are provided in the footnotes to Table 1a and Table 2a.

New assessments were prepared for each of the seven overfished species. The following stock assessment summaries pertain to species that have been declared overfished with either new stock assessments or stock assessment updates. In addition, the academic analysis of shortbelly rockfish is summarized in this section.

Bocaccio (Sebastes Paucispinis)

A stock assessment update and a rebuilding analysis were prepared in 2007 for the bocaccio stock in the southern and central California area (the stock south of Cape Mendocino, CA). The last full assessment for bocaccio rockfish was conducted in 2003 and used the original Stock Synthesis I model. A stock assessment update followed in 2005. Like the 2005 stock assessment update, the new stock assessment update followed the methodology and assumptions of the 2003 bocaccio assessment as closely as possible. Updated information on fishery landings, length compositions, and the California Cooperative Oceanic Fisheries Investigations (CalCoFI) juvenile survey were used to update the assessment. Although the three model approaches from the 2003 assessment were included in the update (the three models are further described in the 2004–2005 proposed rule (69 FR 56550, September 21, 2004)), the STATc model was again considered as the base model and was the focus of the update, with limited consideration given to the STARb1 and STARb2 models.

The results of the stock assessment update indicated that the bocaccio stock biomass has continued to increase. The 1999 year class is still a driving factor, and a larger than average 2003 year class appears to be evident based on updated length composition data from the southern California recreational fishery. The bocaccio stock was estimated to be at 12.7 percent of its unfished biomass in 2007.

The SSC recognized that unresolved problems and major uncertainties identified in the 2003 assessment still remain, but endorsed the updated bocaccio stock assessment as being the best available science for the Council's management recommendations. The bocaccio ABC of 793 metric tons (mt) for 2009 and 2010 was based on the STATc base model with an $F_{50\%}$ F_{MSY} proxy.

Canary Rockfish (Sebastes Pinniger)

A new coastwide stock assessment was completed in 2007 for canary rockfish. The stock assessment, which used the stock synthesis II model (currently the standard model for west coast groundfish), included a number of major changes to the data and modeling approach. New data used in the model included fishery dependent age structure data from the port and on-board observer sampling programs; and, fishery independent data derived from the NMFS triennial bottom trawl survey, the Northwest Fisheries Science Center's trawl survey relative biomass indices and biological sampling, and the Southwest Fisheries Science Center/ Northwest Fisheries Science Center/ Pacific Whiting Conservation Cooperative coastwide prerecruit survey. Although the new data were not highly influential, they did address previously identified issues.

In this assessment and in previous assessments, fishery selectivity (the probability that a fish of a certain length or age will be captured by a given gear) was modeled in multi-year time blocks with changes in selectivity allowed between blocks. In the new assessment, the time blocks for fishery selectivity were simplified. In contrast to the previous assessment, where blocks were defined arbitrarily to improve model fit, the current assessment defined selectivity blocks according to major management actions and known changes in fishing practices (*e.g.*, the change to ''high-rise'' rockfish trawls in the late 1970s). The new approach was considered to be a more objective and rigorous approach to defining selectivity blocks. The results of the new assessment estimate the canary rockfish spawning biomass to be at 32.4 percent of its unfished biomass in 2007. This is in contrast to the previous assessment which estimated the spawning biomass to be at 9.4 percent in 2005. Fishing mortality rates have been less than 1 percent since 2001, indicating that overfishing has not occurred since then. The rate of increase in the biomass is highly dependent on the level of productivity (the value used to define the stock-recruitment steepness has a major influence on stock productivity estimates). After a period of above average recruitment in the late 1980s and early 1990s, recent stock recruitment has generally been low. The only estimates of higher recruitments were in 1999 and 2001. There is little information other than the pre-recruitment index to inform the assessment model about recruitment after 2002. As the larger recruitments from the late 1980s and early 1990s move through the population, the rate at which the biomass increases and the stock recovers may slow. In previous assessments, the stock-recruitment steepness was precisely estimated at a low value. Given the changes in the model structure, the stock-recruitment steepness could not be reliably estimated within the model. Therefore a less precise approach of using a higher valued ''prior'' distribution that was developed from a meta-analysis of U.S. west coast rockfishes was used in the base model.

The SSC endorsed the base model and decision table, which included ''high'' and ''low'' states of nature, as the best available science for Council decision-making. The SSC indicated that the ''low'' and ''high'' states of nature should be considered to be equally likely and half as likely as the base-model. The canary rockfish ABC of 937 mt for 2009 and 940 mt for 2010 are derived from the base model with an $F_{50\%}$ F_{MSY} proxy.

Cowcod (Sebastes levis)

Cowcod in the Conception area was assessed in 2007. The 2007 assessment was originally scheduled to be an update. However, a number of technical issues were raised and it was determined that a full assessment was most appropriate. An age-structured production model was used for the new assessment. The new stock assessment included substantial changes to both data and model structure.

Gear selectivity, which had been mis-specified in the 2005 assessment, was corrected and revised. The growth curve for cowcod was re-estimated based on corrected data. The commercial and recreational sectors were modeled as separate fisheries. The commercial landings from 1900 to 1968 were revised. The California Commercial Cooperative Groundfish Program (1969–1985) revised landings estimates were incorporated into the assessment. In addition, significant changes were made to the spatial stratification and the model used to develop the Commercial Passenger Fishing Vessel Logbook indices. The value used for the stock-recruitment steepness was changed.

The estimated depletion of cowcod was strongly affected by the correction of technical errors. As a result of the model changes, the cowcod spawning biomass in 2005 was believed to be between 3.8 and 24.4 percent of its unfished spawning biomass with the base model estimating the stock to be at 4.0 percent of its unfished biomass, rather than between 14 and 21 percent of its unfished spawning biomass as was

previously estimated in the 2005 assessment. The new assessment estimated the cowcod spawning biomass to be between 4.1 percent and 27.3 percent of its unfished spawning biomass in 2007, with the base model estimate being 4.6 percent. The spawning biomass is estimated to be slowly increasing (by about 0.3 percent per year). An unresolved problem for the stock assessment was the lack of data on stock productivity and recent biomass trends. Indications of recent stock increases are inferred from the model but have not been confirmed by observations.

The SSC endorsed the base model and the decision table based on the ''low'' and ''high'' states of nature for Council decision making. The cowcod ABC of 13 mt for 2009 and 14 mt for 2010 ABC were based on the results of the stock assessment which was based on the STATc base model with an $F_{50\%}$ F_{MSY} proxy1.

Darkblotched Rockfish (Sebastes Crameri)

In 2007, a new stock assessment was prepared for darkblotched rockfish in the combined U.S. Vancouver, Columbia, Eureka and Monterey areas. The stock synthesis model II was used for the stock assessment. The SSC indicated that changes to the darkblotched rockfish stock assessment model represented a substantial advancement. Changes to the stock assessment included: New and updated catch data; new and updated discard rate estimates; new data from the Northwest Fishery Science Center slope and shelf trawl surveys; conditional age-at-length data developed using consistent aging criteria; and data from a new generalized linear mixed model (GLMM) that allows the data for the various survey vessels to be combined into a single continuous time-series of biomass indices. In addition, a full range of length compositions were used for discarded catch, rather than the average size, of discards. The new assessment eliminated Alaska Fishery Science Center slope trawl survey data from the ''super years'' (consisting of combined data from multiple years of partial coastal coverage), the 1977 triennial shelf survey data, and the POP survey data from 1975–1985. These data were removed because the data were unlikely to produce realistic selectivities and were relatively insignificant given all the other data available.

The new stock assessment estimated the darkbloched rockfish stock to be at 22 percent of its unfished spawning biomass level in 2007. In comparison, the last assessment estimated the darkbloched rockfish stock to be 16 percent of its unfished spawning biomass in 2005. In recent years the stock has been rebuilding, with spawning output having increased by 68 percent over the last five years primarily due to strong 1999 and 2000 year-classes (fish in a stock born in the same year). The darkblotched rockfish spawning biomass appears to have increased steadily over the past 5 or 6 years. Since 2001, overfishing occurred only once, with estimated catch exceeding the ABC by 14 mt (5.8 percent) in 2004.

The estimates of natural mortality (deaths in a fish stock caused by predation, pollution, senility, etc., but not fishing) were a major source of uncertainty in the stock assessment. The value used for natural mortality was not changed from the previous assessment. However, the decision tables presented in the analysis bracketed alternative states of nature for natural mortality. The largest change in modeling assumptions between the 2005 and 2007 stock assessments was the value of spawner-recruitment steepness (a parameter that has a major influence on stock productivity). During the review process, a disagreement occurred regarding the use of a fixed parameter at the median value of a ''prior'' distribution developed from a meta-analysis of U.S. west coast rockfishes and an estimate of steepness from within the assessment model using the prior distribution. The SSC recommended using a spawner-recruitment steepness value estimated within the stock assessment model because it incorporates what appears to be meaningful information from the current stock assessment into the productivity estimate.

The SSC endorsed the darkblotched rockfish stock assessment as the best available science for setting 2009 and 2010 harvest specifications. The darkblotched rockfish ABC of 437 mt for 2009 and 440 mt for 2010 are derived from the base model with an $F_{50\%}$ F_{MSY} proxy.

POP (Sebastes alutus)

In 2007, a stock assessment update was prepared for POP (Pacific ocean perch) in the U.S. Vancouver and Columbia areas which used the same model as in the 2003 and 2005 assessments, a forward projection age-structured model. New information used in the stock assessment update included: Updated and new catch data for 2003–2006; updated and new fishery age composition data from 1999–2006; recalculated Northwest Fishery Science Center slope survey biomass indices and age compositions for 1999–2004; and new 2006 Northwest Fishery Science Center slope survey biomass indices and age compositions.

The results of the stock assessment update estimated that the POP spawning biomass was at 27.5 percent of its unfished spawning biomass at the start of 2007. The POP biomass shows an increasing trend with indications of a strong 1999 year class in both the survey and fishery age composition data over several years. Assessment results are highly consistent with the previous assessment, except that a stronger 1999 year class is estimated. The current assessment indicates that the 1999 year class is the strongest since the 1960s.

A number of sources of uncertainty are explicitly included in the stock assessment. For example, allowance is made for uncertainty in natural mortality, the parameters of the stock-recruitment relationship, and the survey catchability coefficients. Sensitivity analyses based upon alternative model structures and data set choices conducted during the 2003 and 2005 stock assessment process suggest that the overall uncertainty may be greater than that predicted by a single model specification. Other sources of uncertainty that are not included in the current model include: The degree of connection between the U.S. west coast and Canadian stock; the effect of climatic variables on recruitment, growth, and survival of POP; gender differences in growth and survival; a possible nonlinear relationship between individual spawner biomass and effective spawning output; and a more complicated relationship between age and maturity.

The SSC determined that the Pacific Ocean perch assessment update complied with the terms of reference for updates and endorsed its use for Council decision-making. The POP ABC of 1,160 mt for 2009 and 1,173 mt for 2010 are derived from the base model with an $F_{50\%}$ F_{MSY} proxy.

Widow Rockfish (Sebastes Entomelas)

In 2007, a stock assessment update was conducted for widow rockfish in U.S. Vancouver, Columbia, Eureka, Monterey, and Conception areas. The widow rockfish stock in these areas is assumed to be a single mixed stock. The age-based population model used in 2005 was updated with new catch data, age compositions data, and catch-per-unit-of-effort time series data from 2005 and 2006.

Since 2001, the widow rockfish biomass has shown an increasing trend with the results of the new stock

assessment estimating the spawning biomass to be at 35.5 percent of its unfished spawning biomass in 2007. This is in contrast to steady declines in the widow rockfish biomass that occurred between 1977 and 2001. Like the 2005 stock assessment, the stock assessment update shows that the stock biomass may not have declined below the overfished species threshold of 25 percent of its unfished spawning biomass, as was estimated in previous assessments. Fishing mortality rates have been less than 6 percent since 2001, indicating that overfishing has not occurred since then.

As with the previous stock assessment, a major source of uncertainty within the current stock assessment is the lack of a reliable abundance index (information obtained from samples or observations and used as a measure of the weight or number of fish which make up a stock) for widow rockfish. The primary source of information on trends in abundance of widow rockfish was fishery dependent information derived from the Oregon bottom trawl logbook data. Because the catch rates have been very low due to catch restrictions, no Oregon bottom trawl logbook data after 1999 can be used in the assessment. Based on the recommendation of the 2003 STAR panel, fishery independent data derived from the National Marine Fisheries Service triennial bottom trawl survey were used to develop an additional abundance index. Additional areas of uncertainty include: The estimated value used for natural mortality; estimates of stock recruitment relationships; the use of Santa Cruz juvenile survey data; and the relationship of the Canadian stock to the U.S. stock.

The SSC endorsed the use of the assessment results by the Council in support of management decisions. The widow rockfish ABC of 7,728 mt for 2009 and 6,937 mt for 2010 are derived from the base model with an $F_{50\%}$ F_{MSY} proxy.

Yelloweye Rockfish (Sebastes Ruberrimus)

A stock assessment update was prepared for yelloweye rockfish in 2007 using the stock Synthesis II model. New catch data were added for 2006, based on the Groundfish Management Team's bycatch scorecard. The catch histories for all fleets were updated for the period 1983–2005.

In the process of updating data for use in the stock assessment update, several errors were identified in the data and input files used for the previous assessment. The errors included: A technical error in the definition of age and length classes, and the inclusion of Washington trawl-caught age compositions included in the age-composition inputs for the Washington hook-and-line fishery. These problems were corrected in developing the 2007 base model. In addition, the natural mortality rate was revised upwards. The changes to the stock assessment model led to downward revisions in the amount of spawning biomass and the level of depletion, relative to the 2006 assessment.

The long-term biomass trajectory from the new stock assessment is very similar to that in the 2006 assessment. Spawning biomass declined steadily and rather rapidly, beginning in the early-1970s, with no indication of increase until roughly 2001. The amount of spawning biomass in all years is lower in the current base model than in the previous assessment, due to the correction of data/input errors discussed above. As a result of the new assessment, yelloweye rockfish was estimated to be at 14.5 percent of its unfished spawning biomass in 2007.

As in the previous assessments, the sparseness of the size and age composition data and the lack of a relevant fishery-independent survey has limited the ability to assess the status of the yelloweye rockfish resource. Further, due to catch restrictions since 2002, catch-per-unit-effort data no longer reflect the real changes in population abundance, and discard estimates are highly uncertain. The current version of Stock Synthesis II model does not allow for the considerable uncertainty in estimated landings. This makes it difficult to evaluate the true uncertainty of model results. Internal estimates of standard error on depletion estimates were on the order of 2–2.5 percent and are likely to underestimate uncertainty.

Overall, the update is consistent with the previous assessment and the SSC endorsed the update model with the revised natural mortality rate for use in status determination and management of the stock. The yelloweye rockfish ABC of 31 mt for 2009 and 32 mt for 2010 are derived from the base model with an $F_{50\%}$ F_{MSY} proxy.

Shortbelly Rockfish (Sebastes jordani)

To understand the potential environmental determinants of fluctuations in the recruitment and abundance of an unexploited rockfish population in the California Current ecosystem, an academic assessment was conducted for shortbelly rockfish in 2007. The analysis, which was conducted by NMFS outside the Council process, was peer reviewed using a structure similar to the Council's stock assessment review process (external reviewers, including a Center for Independent Experts reviewer) and using the Council's terms of reference for groundfish stock assessments. Although the assessment does not fully satisfy the Council's terms of reference for groundfish stock assessments, the SSC indicated that it represented improved knowledge about shortbelly rockfish and might be suitable for management purposes in place of the previously used inferences from the hydroacoustic surveys conducted during 1977 and 1980. The SSC also noted that the assessment of shortbelly rockfish does improve knowledge about one of the non-commercial species included in the Pacific Coast Groundfish FMP and hence provides information relevant to further understanding the ecosystem impacts on the fish populations managed by the Council, as well as the implications of the choice between static and dynamic unfished biomass. The shortbelly rockfish ABC of 6,950 mt for 2009 and 2010 is 50 percent of the status quo ABC. Given the results of the academic assessment, an ABC of 6,950 mt is an amount at which the stock is projected to remain in a state of equilibrium.

OY-Setting Policies

The Council recommends annual harvest levels, which are OYs, for the species or species groups that it manages. The Magnuson-Stevens Act requires the FMP to prevent overfishing while achieving, on a continuing basis, the OY from each fishery. Overfishing is defined in the National Standard Guidelines (50 CFR part 600, subpart D) as exceeding the fishing mortality rate (F) needed to produce MSY on a continuing basis.

A biennial management cycle, adopted under Amendment 17 to the FMP, is being used to establish the 2009 and 2010 harvest specifications and management measures. At the beginning of the biennial management cycle, two one-year ABCs and OYs will be adopted for each species or species complex the Council proposes to manage. The annual OYs will be applied in the same manner as has been done in previous years. If an OY is not achieved or is exceeded in the first year, the underage or overage will not be transferred to the following year, as such a transfer could result in too much fishing or other management problems in the second year. Overages or underages are accounted for in subsequent stock assessments, which are populated with

historical total catch and other relevant data.

The 2009 and 2010 OYs for species other than those managed with overfished species rebuilding plans are set at levels that are expected to prevent overfishing, equal to or less than their ABCs. For overfished species, the OYs are set at levels that allow the overfished species to rebuild as quickly as possible, taking into account the status and biology of the stock, the needs of fishing communities, and the interaction of the stock within the marine ecosystem. The specific OYs being adopted for overfished species are described below in ''OY Policies and Rebuilding Parameters for Overfished Species.''

The ''40–10'' harvest policy is used to set OYs for species that are not managed under overfished species rebuilding plans. The 40–10 harvest policy is designed to prevent stocks from becoming overfished. If a stock's spawning biomass is larger than the biomass needed to produce MSY (B_{MSY}), the OY may be set equal to or less than ABC. The Council uses 40 percent as a default proxy for B_{MSY}, also referred to as $B_{40\%}$. A stock with a current spawning biomass between 25 percent of the unfished level and B_{MSY} (also referred to as the precautionary threshold) is said to be in the ''precautionary zone.'' The 40–10 harvest policy reduces the fishing mortality rate when a stock's biomass is at or below the precautionary threshold. The further the stock biomass is below the precautionary threshold, the greater the reduction in OY relative to the ABC. The slope of the line reduces the OY below $B_{40\%}$ to zero at $B_{10\%}$. This is, in effect, a default rebuilding policy that is intended to foster a quicker return to the B_{MSY} level than would occur with fishing at the ABC level. The OYs for stocks that have been declared overfished (where the stock biomass was below $B_{25\%}$, and where the stock has not yet rebuild to $B_{40\neq}$ or greater) are set in accordance with species-specific rebuilding plans that are designed to meet the rebuilding requirements of the Magnuson-Stevens Act. For further information on the 40–10 harvest policy see Section 5.3 of the Pacific Coast Groundfish FMP.

After considering appropriate analysis, the Council may recommend setting the OY higher than what the default OY harvest policy specifies as long as the OY does not exceed the ABC (which is set at F_{MSY}); complies with the requirements of the Magnuson-Stevens Act; and is consistent with the National Standard Guidelines. On a case-by-case basis, additional precautionary adjustments may be made to an OY if it is necessary to address uncertainty in the data or to reduce the risk of a stock or a co-occurring species from being overfished.

If a stock falls below 25 percent of its unfished spawning biomass ($B_{25\%}$) and is declared overfished, the revised Magnuson-Stevens Act requires the Council to develop and implement a rebuilding plan within two years from the declaration date. In addition, the Council has the discretion to make additional OY adjustments for stocks with only rudimentary stock assessments. For such stocks, the Council's policy is to set the OY at 75 percent of the ABC. For stocks that have not been quantitatively assessed and where the ABC is based on historical data, the OY policy is to set the OY at 50 percent of the ABC. For further information on precautionary adjustments for stocks that have not been quantitatively assessed, see the preamble discussion of the Annual Specification and Management Measures published on January 11, 2001 (66 FR 2338).

2009 and 2010 OYs for Healthy and Precautionary Zone Species

Species that had OYs in 2007 and 2008 continue to have OYs in 2009 and 2010. As stated above, the FMP provides guidance on setting harvest specifications based on a stock's estimated biomass level. For each species or species group where there was no new stock assessment or for those species where the FMP provided clear guidance on the harvest strategy, the Council considered a single combination of ABC/OY harvest levels for 2009 and 2010. These species included: Pacific cod; splitnose rockfish south; yellowtail rockfish north; shortspine thornyhead; longspine thornyhead; black rockfish north; Dover sole; petrale sole; starry flounder; English sole; and other flatfish. The Council recommended final adoption of the ABC/OYs values for these species at its April 2008 meeting. Further information on the OYs for these species can be found in the footnotes to Table 1a. and Table 2a. The Council considered alternative OYs for the following non-overfished species: Lingcod south of 42° N. lat.; sablefish; shortbelly rockfish; chilipepper rockfish; black rockfish south of 42° N. lat.; minor rockfish north and south of 40°10′ N. lat.; California scorpionfish; cabezon; arrowtooth flounder; longnose skate (a species within the other fish complex); and Pacific whiting.

Lingcod

The latest lingcod stock assessment was prepared in 2005 and estimated the coastwide stock to be above 40 percent of unfished spawning biomass. Lingcod is therefore considered to be a healthy stock. When a stock is above 40 percent of its unfished spawning biomass, the FMP harvest policy allows the OY to be set equal to the ABC. Under Alternative 1, coastwide OYs of 5,205 mt in 2009 and 4,785 in 2010 were derived by combining the 612 mt southern area (south of 43° N. lat.) status quo OY with the northern area (north of 43° N. lat.) OYs of 4,593 mt in 2009 and 4,173 mt in 2010. The northern area OYs were derived from the 2005 assessment for the northern substock with the OYs set equal to the ABCs. The southern area status quo OY of 612 mt was the 2006 OY which had been used in 2007 and 2008 as a precautionary measure to allow the southern portion of the stock to continue to increase in biomass. The Council recommended OY is OY Alternative 2 (5,278 mt in 2009 and 4,829 mt in 2010) which is based on the 2005 assessment with the coastwide OY that was set equal to the ABC. The Council recommended the coastwide OY under Alternative 2 as lingcod is considered to be a healthy stock coastwide.

Sablefish

Under the Pacific coast groundfish FMP, sablefish is considered to be a precautionary zone stock because the most recent stock assessment estimated the stock to be at 38.3 percent of its unfished biomass coastwide. At its April 2008 meeting, the Council considered three alternative approaches for setting coastwide, northern and southern subarea (north and south of 36° N. lat.) OYs for sablefish. Sablefish allocations are defined by the FMP and apply to the subareas north and south of 36° N. lat. Therefore, the coastwide OY is proportioned to the subareas and used to define the subarea OYs.

At its April 2008 meeting the Council considered three OY alternatives for sablefish. Alternative 1 was based on the ABC from the 2007 sablefish stock assessment base model with the application of the 40–10 harvest policy which resulted in a coastwide OY of 9,795 mt in 2009 (9,452 mt north of 36° N. lat., and 343 mt south of 36° N. lat.) and 8,988 mt in 2010 (8,673 mt north of 36° N. lat. and 315 mt south of 36° N. lat.) Apportionment of the OY to the northern and southern subareas was done by applying the average proportion of 2000–2001 landings of sablefish north of 36° N. lat. (96.5 percent) and south

of 36° N. lat. (3.5 percent) to the coastwide OY value. Alternative 2 was based on the ABC from the 2007 sablefish stock assessment base model with the application of the 40–10 harvest policy. The coastwide projected yield from the 2007 assessment was apportioned to the area north of 36° N. lat. (72 percent) and the Conception area south of 36° N. lat. (28 percent) using the average 2003–2006 proportions estimated from the Northwest Fishery Science Center's shelf-slope trawl survey. The Conception area OY was then adjusted to 50 percent to account for greater assessment and survey uncertainty south of 36° N. lat. To derive the coastwide OYs, the northern and southern area OYs were summed. The resulting coastwide OYs were 8,423 mt in 2009 (7,052 mt north of 36° N. lat., and 1,371 mt south of 36° N. lat.) and 7,729 mt in 2010 (6,471 mt north of 36° N. lat. and 1,258 mt south of 36° N. lat.) The third OY alternative considered by the Council (Alternative 3) was based on the ABC from the 2007 sablefish stock assessment's low abundance model with the application of the 40–10 harvest policy. The subarea apportionment methodology used to derive OY Alternative 2 specifications was used under Alternative 3. The resulting coastwide OY for 2009 was 6,250 mt (5,233 mt north of 36° N. lat., and 1,018 mt south of 36° N. lat.) and for 2010 it was 5,777 mt (4,837 mt north of 36° N. lat., and 941 mt south of 36° N. lat.)

The Council recommended that the coastwide and northern and southern subarea OY under Alternative 2 be adopted. The precautionary reduction in the southern OY results in a large OY for the Conception Area relative to recent catches. The Cowcod Conservation Area (CCA) closes a significant amount of the Conception Area to fishing and the area-swept biomass estimates for the Conception area are based on the assumption that catch rates outside of the CCAs are comparable to those inside (the survey does not sample within the CCAs). A precautionary reduction of 50 percent was used in the southern area to account for the uncertainty inherent in using a short time-series of relative abundance for setting the OY. The apportionment of biomass using the trawl survey data (Alternatives 2 and 3) incorporates the best available information on the sablefish stock distribution.

Shortbelly Rockfish

In 2007 an academic assessment conducted for shortbelly rockfish indicated the shortbelly stock was healthy and estimated the spawning stock biomass to be at 67 percent of its unfished spawning biomass in 2006. Based on the advice of the SSC, the Council used the academic assessment to develop two alternative approaches for establishing OYs for shortbelly rockfish. Under the first approach (Alternative 1) the status quo OY was reduced to 25 percent resulting in an OY of 3,475 mt in 2009 and 2010. The shortbelly rockfish stock would be expected to increase in abundance under the Alternative 1 harvest rate. Under the second approach (Alternative 2), the status quo OY was reduced to 50 percent resulting in an OY of 6,950 mt in 2009 and 2010. The stock would be expected to remain in its current equilibrium under the Alternative 2 harvest rate. The Council recommended adoption of Alternative 2.

Chilipepper Rockfish

The latest chilipepper stock assessment was prepared in 2007 and indicated that the stock was healthy. At its April 2008 meeting the Council considered 3 alternative approaches to setting OYs for chilipepper rockfish. Under the first approach (Alternative 1) the OY of 2,000 mt in 2009 and 2010, is less than the ABC and is a precautionary OY intended to reduce the potential catch of bocaccio which co-occur with chilipepper rockfish. The second alternative, Alternative 2 had OYs (2,099 mt in 2009 and 2010) based on the estimated MSY at an $F_{50\%}$ SPR harvest rate as estimated in the 2007 assessment. The third approach, Alternative 3, had OYs (3,037 mt in 2009 and 2,576 mt in 2010) that were set equal to the ABC for each year as projected by the base model in the 2007 assessment. The Council recommended Alternative 2 which reduces the risk of overfishing chilipepper. Although chilipepper catch has been constrained because they co-occur with overfished species, particularly bocaccio rockfish, increases in canary, bocaccio or widow rockfish OYs may allow for greater chilipepper rockfish targeting opportunities.

Black Rockfish South of 42° N. lat.

A new stock assessment for Black rockfish south of Cape Falcon (46°16′ N. lat.), estimated the stock to be at 70 percent of its unfished spawning biomass in 2007. At its April 2008 meeting, the Council considered three alternative OYs for the area south of 42° N. lat. Alternative 1 was the sum of the OY set equal to the ABC as derived from the 2007 low productivity stock assessment model, and three percent of the yield from the northern area stock assessment base model where the OY was set equal to the ABC. The resulting OYs were 920 mt in 2009 and 831 mt in 2010. Alternative 2 was based on a constant catch scenario using 1,000 mt for the southern area. OY Alternative 3 was based on the sum of the OY set equal to the ABC for that portion of the stock south of 46°16' N. lat. as derived from the 2007 medium productivity stock assessment model and three percent of the yield from the northern area stock assessment base model where the OY was set equal to the ABC. The resulting OYs were 1,469 mt in 2009 and 1,317 mt in 2010.

The Council recommended the OY Alternative 2. Uncertainties in the 2007 southern black rockfish assessment, implications for management, and comments from the SSC indicating that the decision table, coupled with the probabilities assigned to the various states of nature, provides a large contrast in possible outcomes, which implies a highly uncertain assessment (relative to other rockfish assessments). If productivity is actually low, the stock biomass under Alternative 2 is projected to be at 34.7 percent of its unfished spawning biomass in 2016 and not as close to the overfished level as Alternative 3, which projects the spawning biomass to be at 29 percent of its unfished spawning biomass in 2016.

California Scorpionfish

A 2005 stock assessment on California scorpionfish indicated the stock was healthy, with an estimated spawning stock biomass of 79.8 percent of its unfished spawning biomass in 2005. The California scorpionfish assessment used a recreational catch data stream based upon Commercial Passenger Fishing Vessel (CPFV) logbook data expanded to total recreational catch using a proportion of CPFV to total recreational catch (based upon Marine Recreational Fisheries Statistics Survey catch history). The Council's SSC approved this assessment, with the caveat that the ABC/OY from this assessment could only be related to recreational catch calculated in the same manner as this catch stream. Consequently, an alternative ABC/OY was generated by modifying the original ABC/OY from the assessment so that it could be compared and tracked using California Recreational Fisheries Survey (CRFS) catch estimates.

Because the stock is above $B_{40\%}$ coastwide, the OY could be set equal to the ABC. Both the original stock assessment and the modified stock assessment were used to develop 2 California scorpionfish OY alternatives. The Alternative 1 OY (111 mt in 2009 and 99 mt in 2010) is based on the

results of the 2005 stock assessment as modified to incorporate CRFS estimates. Alternative 2 (175 mt in 2009 and 155 mt in 2010) was a value that was intermediate to the 2007–2008 OY of 137 mt from the 2007–2008 OY from the base model with the CPFV modification, and the 2007–2008 OY of 219 mt from the base model without the CPFV modification. The Council recommended the higher Alternative 2 OYs because the stock is considered to be healthy and recent harvests have been relatively low.

Cabezon

The Council considered OY alternatives based on the most recent cabezon assessment, which was done for the portion of the stock occurring in waters off California in 2005. In 2005, the Cabezon stock was estimated to be at 40.1 percent of its unfished spawning biomass north of 34°27′ N. lat. and 28.3 percent of its unfished biomass south of 34°27′ N. lat. Since the two substocks collectively have an estimated spawning output less than $B_{40\%}$, cabezon in waters off California were considered a precautionary zone stock.

OY Alternative 1 (69 mt in 2009 and 2010) was the status quo OY from 2007–2008 and is based on a constant harvest level that is consistent with a 60–20 harvest policy adjustment as specified in the California Nearshore Management Plan. The 60–20 adjustment is analogous to the Council's default 40–10 rule, where, the OY equals the ABC at spawning biomasses ≥60 percent of initial biomass and linearly reduced from the ABC until, at 20 percent of initial biomass, the OY is set to zero. The OY Alternative 2 (74 mt in 2009 and 2010) is an average OY for 2009 and 2010 based on the projected values from the 2005 assessment using an $F_{50\%}$ harvest rate with the 60–20 harvest policy adjustment. The third OY alternative (Alternative 3) is similar to Alternative 2 in that the projected values are from the 2005 assessment using an $F_{50\%}$ harvest rate with the 60–20 harvest policy adjustment. However, under Alternative 3, the OYs were not averaged across the two years. The resulting OYs considered under Alternative 3 were 69 mt in 2009 and 79 mt in 2010. The Council recommended the Alternative 3 OYs which allow for more efficient state management of Cabezon.

Arrowtooth Flounder

Alternative OYs for arrowtooth flounder are based on a new stock assessment conducted in 2007 which indicated that the stock was healthy with a spawning biomass estimated at 79 percent of its unfished spawning biomass in 2007. OY Alternative 1 (5,245 mt in 2009 and in 2010) for arrowtooth flounder is based on the MSY at an $F_{40\%}$ harvest rate as estimated in the 2007 assessment. The Alternative 2 OYs (11,267 in 2009 and 10,112 mt in 2010), were based on the OY being set equal to the ABC for the stock. These alternative OYs compare to the status quo ABC/OY of 5,800 mt from 2007 and 2008. The Council recommended Alternative 2 which is the OY being set equal to the estimated ABC for the stock. Increases to the arrowtooth flounder OY raised concerns about potential impacts on overfished species, particularly canary.

Longnose Skate

The council considered three longnose skate alternative OYs based on a 2007 stock assessment which estimated the stock to be at 66 percent of its unfished spawning biomass in 2007. At its June 2008 meeting the Council recommended that the 2007 assessment be used to establish 2009 and 2010 harvest specifications for longnose skate. In doing this, longnose skate would be removed from the ''other fish'' complex.

The Council considered OY alternatives were: Alternative 1 (901 mt in 2009 and 902 mt in 2010) was based on the projected OYs from the 2007 base model using the current estimated exploitation rate (0.0125); Alternative 2 (1,349 mt in 2009 and 2010); which was the average landings and discard mortality from 2004–2006, increased by 50 percent; OY Alternative 3 (3,428 mt in 2009 and 3,269 mt in 2010) was the OY set equal to the ABC from the 2007 base model with a harvest rate proxy of $F_{45\%}$ (corresponds to an exploitation rate of 0.043).

At its June 2008 meeting, the Council discussed the removal of longnose skate from the ''other fish'' complex. During discussions, concerns were raised about the removal of longnose skate from the complex. Adjustments to the other fish complex that included longnose skate were considered. However, for more accurate catch accounting the Council recommended removing longnose skate from the other fish complex and establishing species-specific specifications and managing it with its own OY of 1,349 mt in 2009 and 2010 (Alternative 2). An ABC of 11,200 mt and an OY of 5,600 mt would then be specified for the Other Fish complex.

Minor Rockfish North and South of 40°10′ N. lat.

The first blue rockfish assessment on the West Coast was conducted in 2007 for the portion of the stock occurring in waters off California north of Point Conception (34°27′ N. lat.). The blue rockfish stock was estimated to be at 29.7 percent of its unfished spawning biomass in 2007; therefore, the stock is considered in the precautionary zone. Blue rockfish is currently managed under the minor rockfish complex; however the Council considered removing blue rockfish from the minor rockfish complex and setting a species-specific OY. In addition, the Council considered setting a harvest guideline for blue rockfish within the minor rockfish north and minor rockfish south OY, rather than setting a species-specific OY.

Because the blue rockfish stock off California (that portion south of 42° N. lat.) is under both the minor nearshore rockfish north and the minor nearshore rockfish south complexes, alternative OYs were considered for each minor rockfish complex (minor rockfish south Alternatives 1–3 and minor rockfish north Alternatives 1–3). In addition, two OY alternatives that specifically considered species-specific harvest specifications (blue rockfish OY Alternatives 3 and 4) were considered by the Council. For minor rockfish south, the blue rockfish status quo (2007–2008) OY contribution was 232 mt, and for minor rockfish north the OY contribution was 30 mt. When considering new OYs for species managed within complexes, the status quo OY contributions are removed and replaced with the newly adopted values, then the OYs for all other species in the complex are summed to derive the complex OY value.

The two minor rockfish south alternatives that maintained blue rockfish within the complex were Alternatives 1 and 2. Alternative 3 removed blue rockfish from the complex. Under the minor rockfish south, Alternative 1, the OY was determined by replacing the old OY contribution of 116 mt for blue rockfish with the new contribution of 182 mt, based on the 2007 assessment base case model, given a medium productivity. The resulting OYs were 1,970 mt for 2009 and 2010. Alternative 2 for minor rockfish south considered a new blue rockfish OY contribution of 202 mt based on the projected OY from 2007 stock assessment base model, given a high productivity as limited by the base model ABC. The resulting OYs under Alternative 2 were 1,990 mt in 2009 and 2010. OY Alternative 3 (1,788 mt in 2009 and 2010) removed the status quo OY contribution for blue rockfish from the minor nearshore rockfish south

complex and considered managing blue rockfish under its own specifications.

The Council also considered two minor rockfish north alternatives that maintained blue rockfish within the complex (Alternatives 1 and 2) and one alternative that removed blue rockfish from the complex (Alternative 3). Under OY Alternative 1 (2,280 mt in 2009 and 2010) the old blue rockfish OY contribution of 15 mt was removed and the results from the 2007 assessment base model with medium productivity (25 mt in 2009 and 2010) were added back in to derive a 2,280 mt OY. Under OY Alternative 2 (2,283 mt in 2009 and 2010), the old blue rockfish OY contribution of 15 mt was removed and the results from the 2007 assessment with high productivity, as capped by the base model ABC (28 mt in 2009 and 2010), were added back in to derive a 2,283 mt OY.

OY Alternative 3 (2,255 mt in 2009 and 2010) contemplates removing blue rockfish from the northern minor rockfish complex and managing blue rockfish under its own harvest specifications. To establish species-specific specifications for blue rockfish, two OY alternatives were considered. OY Alternative 3 (207 mt in 2009 and 2010) was the sum of the 198 mt OY based on the ABC from the base model with the 40–10 harvest rate for the assessed portion of the California stock north of Pt. Conception at 34°27′ N. lat., plus 9 mt for the contribution to the OY south of Point Conception. OY Alternative 4 (230 mt in 2009 and 2010) was the sum of the 221 mt OY base on the OY being set equal to the ABC from the 2007 stock assessment base model, given high productivity model, plus 9 mt for the contribution to the OY south of Point Conception. The 9 mt contribution for the area south of Point Conception is a 50 percent adjustment of the original ABC contribution of blue rockfish from the southern minor nearshore rockfish complex (18 mt), which represents the average 1994–99 harvest of blue rockfish in those waters.

In making this determination about removing blue rockfish from the minor rockfish complex, the Council considered the stock biology, available management strategies, and current catch levels. When blue rockfish occur offshore they can be targeted separately from other nearshore rockfish, but those that occur inshore mix with other nearshore rockfish stocks. Blue rockfish will continue to be managed as part of the minor rockfish complex. However, the state of California will take the necessary action to reduce the catch of blue rockfish and to monitor it closely to reduce the risk of exceeding the OY.

Pacific Whiting

Consistent with the U.S.-Canada agreement for Pacific whiting, the Council recommended a range of OYs for Pacific whiting for 2009 and 2010, and delayed adoption of final 2009 and 2010 ABCs and OYs until its March 2009 and 2010 meetings, respectively. The final ABC and OY values recommended in March will be based on stock assessments which include the most recent scientific information and that are completed each year, just prior to the Council's March meeting. The DEIS for the 2009 and 2010 management measures considers a range for OYs and the resulting impacts. The range of alternatives considered in the DEIS for the U.S. OY are as follows: OY Alternative 1 (134,773 mt) which is half the OY specified in 2008, OY Alternative 2 (269,545 mt) which is the status quo 2008 OY, and OY Alternative 3 (404,318 mt) which is 150 percent of the status quo OY. Given the results of recent assessments, the recommended range of OYs is expected to accommodate the projected results of the new assessments. Revisions to the Pacific Coast treaty Indian tribes Pacific whiting allocations are being proposed with this rulemaking. Further discussion of the proposed allocation scheme is described below in the tribal section.

OY Policies and Rebuilding Parameters for Overfished Species

Under the Magnuson-Stevens Act, overfished species rebuilding periods must be as short as possible, taking into account the status and biology of any overfished stocks of fish, the needs of fishing communities, and the interaction of the overfished stock of fish within the marine ecosystem. National Standard 8 of the Magnuson-Stevens Act, 16 U.S.C. 1851(a)(8), also requires consideration of fishing communities consistent with the conservation requirements of the Act: ''Conservation and management measures shall, consistent with the conservation requirements of this Act (including the prevention of overfishing and rebuilding of overfished stocks), take into account the importance of fishery resources to fishing communities in order to (A) provide for the sustained participation of such communities, and (B) to the extent practicable, minimize adverse economic impacts on such communities.'' (1851(a)(8)). Both National Standard 8 and the rebuilding provisions address the difficult and often conflicting short term and long term socioeconomic and biological considerations in fisheries management, which require sustaining the long term productivity of the marine resources and fishing communities. Under the FMP, when a stock assessment estimates that a stock is below 25 percent of estimated unfished spawning biomass ($B_{UNFISHED}$) it is declared overfished. The Magnuson-Stevens Act requires that overfished stocks be rebuilt to B_{MSY}, which is the biomass level at which a stock is estimated to be able to maintain its maximum sustainable yield (MSY) over time. The FMP sets a proxy B_{MSY} level for all groundfish species at 40 percent of a stock's unfished spawning biomass level ($B_{40\%}$). When a stock has been declared overfished a rebuilding plan must be developed and the stock must then be managed in accordance with the rebuilding plan. An overfished groundfish stock is considered rebuilt once its spawning biomass reaches $B_{40\%}$.

When a stock's spawning biomass is estimated to be below $B_{25\%}$, a rebuilding analysis is prepared. Life history characteristics (*e.g.*, age of reproductive maturity, relative productivity at different ages and sizes, etc.) and the effects of environmental conditions on its abundance (*e.g.*, relative productivity under inter-annual and inter-decadal climate variability, availability of suitable feed and habitat for different life stages, etc.) are taken into account in the stock assessment and the rebuilding analysis. A rebuilding analysis for an overfished species uses the information in its stock assessment to determine T_{MIN}, the minimum time to rebuild to $B_{40\neq}$ in the absence of fishing. For each stock, its T_{MIN} is dependent on a variety of physical and biological factors. The rebuilding analyses are used to predict T_{MIN} for each overfished species and, in doing so, answer the question of what is ''as quickly as possible'' for each of the overfished species. It must be noted that rebuilding by the T_{MIN} date would require elimination of human-induced fishing mortality on a stock. Because of the interrelationships of the various stocks in the groundfish fishery, zero fishing mortality on an overfished stock would require a complete or near complete prohibition on all groundfish fishing. The complete absence of targeted fishing mortality on the stock does not necessarily result in the complete absence of human-induced mortality on the stock.

No new species were declared overfished from the 16 groundfish assessments conducted in 2007. However, new stock assessments and rebuilding analyses for all of the seven overfished groundfish species were developed and adopted in 2007. For

2009–2010, the Council reviewed rebuilding plans for the seven species and reconsidered those plans in response to the results of new assessments and rebuilding analyses. For four of the overfished species (POP, bocaccio, widow rockfish, and yelloweye rockfish), the rebuilding progress was considered adequate by the SSC, and the new assessments and rebuilding analyses did not change the fundamental understanding of the stocks. However, for three stocks, canary rockfish, darkblotched rockfish, and cowcod, the new stock assessments resulted in fundamental changes in the understanding of the biology of the stocks, therefore those rebuilding plans are being revised in a manner that is consistent with Amendment 16–4. These revisions are discussed further below. Canary rockfish is very much ahead of schedule, while darkblotched rockfish and cowcod are substantially behind schedule. For canary rockfish and darkblotched rockfish, the changes are due primarily to changes in the understanding of stock productivity and depletion. In the case of cowcod, there was a departure from the expected rebuilding trajectory due to the correction of a technical flaw in the 2005 assessment. The Council also recommended modifications to the yelloweye rockfish rebuilding plan.

The Council continued to use an integrated rebuilding strategy that moves fishing effort off of the more sensitive rebuilding species and on to the less sensitive rebuilding species (*i.e.*, off of species with longer rebuilding times and onto species able to rebuild quicker). This concept was determined to be the best way of taking into account the biology of the stocks and the needs of fishing communities in a programmatic fashion that simultaneously considered all rebuilding species and groundfish sectors. Earlier, this notice discussed the Council's decision-making process and how that process focused the Council's decision on a suite of inter-related OYs for overfished species. As discussed above, the overfished species OYs constrain fishing for all co-occurring groundfish species and for some non-groundfish species as well, making the suite of overfished species OYs the cornerstone of the entire groundfish harvest specifications and management measures package. As also discussed above, recommending a suite of interrelated overfished species OYs allowed the Council to consider a management package that best takes into account the status and biology of those stocks and the needs of fishing communities, by emphasizing catch reductions for the species most sensitive to changes in OY harvest rates and consideration of communities most vulnerable to shifts in groundfish fishing income.

At its April 2008 meeting, the Council considered seven rebuilding alternatives that packaged overfished species OYs with management measures intended to constrain fishing to those OYs. Rebuilding Alternative 1 was designed to allow more fishing opportunities on the continental shelf north and south of 40°10′ N. lat. by specifying relatively higher OYs for bocaccio, canary rockfish, cowcod, widow rockfish and yelloweye rockfish, while allowing fewer fishing opportunities on the slope by specifying relatively lower OYs for darkblotched rockfish and POP. Rebuilding Alternative 2 was conversely designed to allow fewer fishing opportunities on the shelf north and south of 40°10′ N. lat. by specifying relatively lower OYs for the shelf species (bocaccio, canary, cowcod, widow, and yelloweye), and higher fishing opportunities on the slope by specifying relatively higher OYs for the slope species (darkblotched and POP). Rebuilding Alternative 3 was the most restrictive alternative coastwide because it was constructed with relatively low OYs for all the overfished species. Rebuilding Alternative 4 was the most liberal alternative coastwide since it was constructed with relatively high OYs for all the overfished species. Rebuilding Alternatives 5a and 5b allowed mixed fishing opportunities by sector north and south of 40°10′ N. lat. and in shallow and deeper waters and are designed to show further trade-offs between rebuilding OYs that may not be captured by rebuilding Alternatives 1 through 4. The preferred suite of overfished species OYs identified by the Council in April 2008 included: 105 mt for canary in 2009 and 2010; 17 mt for yelloweye in 2009 and 14 mt in 2010; 288 mt for bocaccio in 2009 and 2010; 3 mt for cowcod in 2009 and 2010; 189 mt for POP in 2009 and 200 mt in 2010; 300 mt for darkblotched in 2009 and 306 in 2010; and 475 mt for widow rockfish in 2009 and 2010.

At its June 2008 meeting, the Council made final recommendations on: 2009–2010 OYs; rebuilding plan revisions; bycatch limits for the proposed 2009 exempted fishing permits (EFPs); and groundfish management measures designed to keep catch levels within the final preferred OYs. The final preferred suite of overfished species OYs recommended by the Council included: 105 mt for canary in 2009 and 2010; 17 mt for yelloweye in 2009 and in 2010; 288 mt for bocaccio in 2009 and 2010; 4 mt for cowcod in 2009 and 2010; 189 mt for POP in 2009 and 200 mt in 2010; 285 mt for darkblotched in 2009 and 291 in 2010; and for widow rockfish 522 mt in 2009 and 509 in 2010.

Under the Council's recommended suite of rebuilding OYs, POP, widow rockfish, canary rockfish and bocaccio OYs increase from 2008 levels, easing constraints on target species that co-occur with the overfished species. However, rebuilding OYs for darkblotched rockfish and yelloweye rockfish decline from 2008 levels under the Council-recommended suite of alternatives. Reductions in the darkblotched rockfish and yelloweye rockfish OYs would require more restrictive management measures to reduce the catch of these two species. The impacts to the non-whiting limited entry trawl sector under the final Council-preferred alternative are largely driven by the OYs for canary rockfish, bocaccio rockfish, darkblotched rockfish, cowcod, and POP. Under the final Council-preferred alternative, the limited entry bottom trawl sector is predicted to generate approximately $2.8–3 million more exvessel revenue than in 2007 (Status Quo). This increase is largely driven by increases in the abundance of sablefish, English sole and arrowtooth flounder, as opposed to changes in rebuilding species OYs.

Fishing opportunity and economic impacts to the nearshore groundfish sector are largely driven by the need to reduce the catch of canary and yelloweye rockfish. In areas south of 40°10′ N. lat., observer data has not shown an interaction with yelloweye rockfish, so canary rockfish is the driving constraint in this area. The impacts to recreational sectors are driven by the OYs for yelloweye rockfish, canary rockfish, and to a lesser extent, bocaccio and widow rockfish.

The OY alternatives for yelloweye rockfish are based on the 2007 assessment, which is an update of the 2006 assessment, and the 2007 rebuilding analysis which is based on the 2007 updated assessment. The 2007 updated assessment did not significantly change the understanding of stock productivity, although the median time to rebuild under the status quo harvest rate ramp-down strategy is now predicted to be 2082 instead of 2084, largely due to a higher assumed natural mortality rate. Yelloweye rockfish have a life history that illustrates the classic challenge of rebuilding overfished rockfish stocks; they are slow to mature, have low productivity, and can live in excess of 100 years. Given their low productivity,

small changes in yelloweye rockfish long-term harvest rates can result in large changes in the time to rebuild. According to the rebuilding analysis, in the absence of fishing beginning in 2009 (TF = 0), the stock would be rebuilt in 2049. Continuing the ramp-down strategy, adopted in Amendment 16–4, of 17 mt 2009 and 14 mt in 2010, with the SPR going to 0.719 beginning in 2011 produces a median year to rebuild of 2082. In contrast, applying the SPR of 0.719 beginning in 2009 (which would produce an OY of 13.3 mt in 2009 and 13.6 mt in 2010) produces the same median year to rebuild. Therefore, slight changes in the OY at the beginning of the rebuilding schedule make little to no difference in the time needed to rebuild.

When setting the 2007 and 2008 harvest specifications and management measures, the Council recognized the need to restrict the fisheries based on the new yelloweye rockfish assessment, but also took into account the potentially widespread negative effects of an immediate reduction in OY and recommended an OY ramp-down strategy over a 5-year period. The ramp-down strategy provides time to collect much needed additional data that could better inform new management measures for greater yelloweye rockfish catch reduction, and reduces the immediate adverse impacts to fishing communities while altering the rebuilding period by less than one year. The ramped down OY adopted for yelloweye rockfish during the 2007 and 2008 management cycle began with an OY of 23 mt in 2007 and 20 mt in 2008. The OY was to be reduced each year until ultimately reaching 14 mt in 2011. Under this approach the yelloweye rockfish rebuilding plan would revert to a constant harvest rate of F = 0.0101 percent through the rebuilt date of 2084. The yelloweye rockfish OY ramp-down strategy was a departure from the practice of setting constant harvest rates that are intended to carry through time to the rebuilt dates. The 2009–2010 OY alternatives developed for yelloweye rockfish were based on the 2007 stock assessment update and the 2007 rebuilding analysis. The stock assessment update and rebuilding analysis did not significantly change the understanding of stock productivity, although the median time to rebuild the stock under the status quo harvest rate ramp-down strategy was projected to be 2082 instead of 2084 as previously estimated. The change in median rebuilding time was largely due to a higher assumed natural mortality rate. All of the yelloweye rockfish OYs considered by the Council were expected to cause severe impacts to fisheries and communities. The Council expressed strong concern about the severity of the impact on communities resulting from ramp-down strategy as the OY drops below 17 mt. The Council also expressed concern that the current stock assessment for yelloweye rockfish was data-poor, but was hopeful that the next assessment (a full assessment with additional data) would be more optimistic.

The Council initially identified a preference for maintaining the 2007–2008 ramp-down strategy, which reduced the yelloweye rockfish OY to 17 mt in 2009 and 14 mt in 2010. The median time to rebuild the stock under the status quo was 2082. Although yelloweye rockfish was the most constraining species to the fishery, the Council considered it to be prudent to stick with the ramp-down approach as higher OYs could result in a greatly extended rebuilding period, or make reductions after 2010 even more difficult on the fishery. At its April 2008 meeting, the Council requested analysis of an alternative ramp-down approach that would specify both the 2009 and 2010 OYs as 17 mt ($F_{66.3\%}$), before ramping down to the status quo SPR harvest rate of $F_{71.9\%}$ in 2011. After consideration of the new information available at the Council's June 2008 meeting, the Council chose to recommend a yelloweye rockfish OY of 17 mt in both 2009 and 2010 and to maintain the target rebuilding year of 2084 in the status quo yelloweye rebuilding plan. Although the original ramp-down analysis was done assuming an OY of 14 mt in 2010, as noted above, an OY of 17 mt in 2010 does not significantly alter the rebuilding schedule.

A 17 mt OY in 2010 would require a more abrupt adjustment by management and industry as the fishery transitions to the constant harvest rate in 2011. However, maintaining a slightly higher OY in 2010 would allow both management and industry to learn how to manage to the highly restrictive harvest levels needed to rebuild yelloweye. Scientific data collection may be allowed with the slightly higher OY. Scientific data are needed to improve stock assessments and to help understand how to make fishery catch reductions. The Council did not recommend revising the target rebuilding year or the harvest control rule for 2011 and beyond. This constant harvest rate beginning in 2011 is a key feature of the yelloweye rebuilding plan and represents the Council's primary decision on how to rebuild the stock in as short a time as possible, taking into account the status and biology of any overfished stock of fish and the needs of fishing communities.

At their April 2008 meeting, the Council requested an analysis of the associated impacts of yelloweye rockfish catch sharing between directed groundfish sectors and state recreational fisheries. The alternative catch sharing was to be based on the 2005 and 2007 projections of catch documented by the Groundfish Management Team in the final bycatch scorecards. This is the first management cycle where all three states have been constrained by yelloweye rockfish. In prior management cycles, the California fisheries were more constrained by the availability of canary rockfish than yelloweye rockfish. Potential harvest guidelines for yelloweye rockfish that would be available for the different groundfish fisheries were provided for each OY alternative. At its June 2008 meeting, the Council recommended adoption of an alternative catch sharing arrangement for yelloweye rockfish that restructured the catch sharing based on the 2005 bycatch scorecard: Limited entry non-whiting trawl 0.6 mt; limited entry whiting 0.0 mt; limited entry fixed gear 1.4 mt; directed open access 1.1 mt; Washington recreational 2.7 mt; Oregon recreational 2.4 mt; California recreational 2.7 mt; and 0.3 for exempted fishing.

For cowcod, the SSC recommended revising the cowcod rebuilding plan based on the new 2007 stock assessment because of technical errors in the 2005 assessment that led to a flawed understanding of the status and biology of the stock. The Council initially recommended an OY of 3 mt in 2009 and 2010 based on a higher SPR harvest rate ($F_{83.6\%}$) at its April 2008 meeting. The 2007 and 2008 status quo OY was 4 mt. Because a 3-mt alternative was not analyzed in the original 2007 cowcod rebuilding analysis, the Council deferred their decision on revised cowcod rebuilding plan parameters until June 2008. Cowcod is an unproductive stock that is more depleted than previously thought. Although cowcod impacts have been minimized by prohibiting retention and area closures in California waters, there have been instances when 3 mt has been estimated to have been incidentally taken.

The majority of incidental catch of cowcod has occurred in the recreational and trawl fisheries. With the increased sablefish OY the trawl fishery could be curtailed if the 3 mt cowcod OY were specified. The Council indicated that there were few remaining restrictions available under the groundfish FMP that

would further reduce the take of cowcod. The Council made the recommendation for 4 mt on the belief that additional large scale closures of fisheries to further reduce cowcod take would be devastating to California fishing communities.

The departure from the expected rebuilding trajectory, due to correction of the technical flaw that existed in the 2005 assessment, resulted in a longer time to rebuild the cowcod stock than was originally estimated because of a lower estimated depletion level. Given this was a fundamental revision in the understanding of the biology of cowcod, the SSC indicated that a revision in T_{TARGET} was warranted. The Council recommended formally revising the target rebuilding year in the cowcod rebuilding plan from 2039 to 2072 and the SPR harvest rate from $F_{90.0\%}$ to $F_{82.1\%}$.

The SSC recommended maintaining the status quo bocaccio rebuilding plan adopted under Amendment 16–4 since the new assessment did not appreciably change the understanding of the stock's status from the previous assessment. The Council elected to maintain the status quo target rebuilding year of 2026 and SPR harvest rate ($F_{77.7\%}$) in the current bocaccio rebuilding plan with a corresponding OY of 288 mt in both 2009 and 2010. The SSC concluded that bocaccio was showing adequate progress towards rebuilding.

The new assessment and rebuilding analysis confirmed that widow rockfish stock is on track for recovery by the next assessment cycle. Widow rockfish is incidentally taken in the Pacific whiting fishery, where the catch of widow rockfish is constrained under bycatch limits. Constraining widow rockfish incidental catch inseason has resulted in the Pacific whiting fishery having to shift their fishing areas to better avoid widow rockfish, and early closure in 2007 when the widow rockfish bycatch limit was reached. However, as discussed above, efforts to reduce widow bycatch have resulted in increased darkblotched rockfish bycatch. Widow rockfish also occurs, but less frequently, in fixed gear and recreational fisheries.

At its April 2008 meeting the Council recommended a preliminary preferred OY for widow rockfish of 475 mt in 2009 and 2010. Although widow rockfish is projected to be rebuilt after the next assessment, the Council recognized that the stock is not yet rebuilt and will need to be fully assessed before the next biennial management period. A recommendation of 475 mt is lower than required by the rebuilding plan, but was considered to provide a reasonable probability of harvesting the available whiting harvest allocation if similar to 2008. At its June 2008 meeting, and for the reasons discussed above regarding the relationship between darkblotched rockfish catch and widow rockfish catch in the Pacific whiting fishery, the Council made a final OY recommendation for widow rockfish of 522 mt in 2009 and 509 mt in 2010. The Council's recommended OYs are based on the status quo SPR harvest rate of $F_{95.0\%}$. The Council elected to maintain the target rebuilding year (2015) and the harvest control rule ($F_{95.0\%}$) in the widow rockfish rebuilding plan.

The SSC recommended revising the status quo darkblotched rockfish rebuilding plan adopted under Amendment 16–4 since the new assessment fundamentally changed the understanding of stock productivity. It was determined that the status quo target rebuilding year of 2011 in the current darkblotched rebuilding plan cannot be achieved even under a zero harvest rebuilding strategy $T_{F=0}$. Reductions in the darkblotched rockfish OYs are highly limiting to the trawl fisheries because darkblotched rockfish co-occurs with the most economically important species in the fishery such as petrale sole, sablefish, and whiting. Darkblotched appears to restrict exvessel revenues in the trawl fisheries more than other species such as canary. Although the relationship between widow rockfish and darkblotched rockfish incidentally taken in the Pacific whiting fishery is uncertain, attempts to avoid darkblotched rockfish have resulted in increased widow rockfish catch and vice versa. The Council considered reducing the darkblotched OY below the preferred OYs of 475 in 2009 and 2010 that had been preliminarily recommended in April and increasing the widow rockfish to 522 mt in 2009 and 509 mt in 2010. By increasing the widow rockfish OY, the whiting fishery would be encouraged to adjust their fishing strategy to further reduce their bycatch of darkblotched rockfish, and the needs of fishing communities would continue to be taken into account. The lower OY for darkblotched rockfish would result in faster rebuilding of that stock while the time to rebuild widow rockfish would remain unchanged. Therefore, the darkblotched rockfish recommendation was reduced from the 300 in 2009 and 306 in 2010, recommended in April 2008, to 285 mt in 2009 and 291 mt in 2010, recommended in June 2008. Because of the new stock assessment, the Council recommends revising the current darkblotched rebuilding plan by specifying a target rebuilding year of 2028 and a harvest control rule of $F_{62.1\%}$. This is a more conservative harvest rate, but a longer time to rebuild.

For canary, the SSC recommended revising the status quo canary rockfish (*Sebastes pinniger*) rebuilding plan adopted under Amendment 16–4 since the new assessment fundamentally changed the understanding of stock productivity. The Council recommended an OY of 105 mt for both 2009 and 2010, an increase from 2007–2008 OY of 44 mt, but consistent with the existing rebuilding plan. The Council also recommended revising the target rebuilding year from 2063 to 2021, which is two years longer than F=0 and maintaining the SPR harvest rate of $F_{88.7\%}$ defined in the current canary rebuilding plan. Given the new understanding of the condition of the stock and the revised rebuilding plan, the Council indicated that setting the canary OY to 105 mt was a prudent approach while still precautionary and consistent with the Magnuson-Stevens Act requirements. The fishing communities have endured substantial hardship with the 44 mt canary OY in 2007 and 2008 because substantial harvest of other healthy species was foregone, regardless of best efforts to reduce incidental catch.

At their April 2008 meeting, the Council requested an analysis of the associated impacts of canary rockfish catch sharing between directed groundfish sectors and state recreational fisheries. The alternative catch sharing was to be based on the 2005 and 2007 projections of catch, documented by the Groundfish Management Team in the final bycatch scorecards. Potential harvest guidelines for canary rockfish were provided for each OY alternative. At its June 2008 meeting, the Council recommended adoption of an alternative catch sharing arrangement for canary rockfish based on the initial 2005 scorecard. The following recommended alternative would provide flexibility for some fisheries: Limited entry non-whiting trawl 19.7 mt; limited entry whiting 18.0 mt; limited entry fixed gear 2.5 mt; directed open access 2.2 mt; Washington recreational 4.9 mt; Oregon recreational 16.0 mt; and California recreational 22.9 mt.

Information on the status and biology of POP and their effects on fishing communities has remained relatively unchanged since the analysis of the 2007 and 2008 harvest specifications and Amendment 16–4. Therefore, the Council recommended an OY of 189 mt in 2009 and 200 mt in 2010. The

Council elected to maintain the status quo target rebuilding year of 2017 and the SPR harvest rate $F_{86.4\%}$ specified in the current POP rebuilding plan.

For each approved overfished species rebuilding plan, the following parameters are specified in the FMP: Estimates of unfished biomass (B0) and target biomass (B_{MSY}); the year the stock would be rebuilt in the absence of fishing (T_{MIN}); the year the stock would be rebuilt if all fishing mortality were to cease beginning in 2007 ($T_{F=0}$); the year the stock would be rebuilt if the maximum time period permissible under National Standard Guidelines were applied (T_{MAX}); the target year in which the stock would be rebuilt under the adopted rebuilding plan (T_{TARGET} also referred to as the median time to rebuild); the spawning potential ratio (SPR = the ratio of the equilibrium spawning output per recruit under fished conditions to the spawning output per recruit under no fishing); and/or, the harvest control rule (F). Other relevant rebuilding information is also included in the FMP. The estimated rebuilding parameters serve as management benchmarks in the FMP and the FMPs are not amended when the values change after new stock assessments are completed, as is likely to happen.

Rebuilding parameters being codified in regulation (50 CFR 660.365) are the harvest control rule and the target time to rebuild. If, after a new stock assessment, the Council and NMFS conclude that the parameters defined in regulation should be revised, the revision will be implemented through the Federal rulemaking process with public notice and opportunity for comment. Any changes to the values in regulation will be supported by a corresponding analysis. Approved rebuilding plans are implemented through setting OYs and establishing management measures necessary to maintain the fishing mortality within the OYs to achieve objectives related to rebuilding requirements. The rebuilding OYs and management measures being implemented through Federal regulations are summarized below. Management measures adopted for 2009 and 2010 are expected to keep the incidental catch of overfished species within the adopted OYs. Management measures designed to rebuild overfished species, or to prevent species from becoming overfished, may restrict the harvest of relatively healthy stocks that are harvested with overfished species. As a result of the constraining management measures imposed to rebuild overfished species, a number of the OYs for healthy stocks may not be achieved.

The OY alternatives analyzed in the DEIS were based on harvest rates estimated from the rebuilding simulation program and were calculated using a Spawning Potential Ratio or SPR (the ratio of the equilibrium spawning output per recruit under fished conditions to the spawning output per recruit under no fishing) which may be converted to an instantaneous rate of fishing mortality (F). Given fishery selectivity patterns and basic life history parameters, there is an inverse relationship between the harvest control rule (F) and SPR harvest rate. When there is no fishing, each new female recruit is expected to achieve 100 percent of its spawning potential (SPR=100%, F=0). As fishing intensity increases, expected lifetime reproduction declines due to this added source of mortality. Calculation of the harvest control rule SPR has the benefit of standardizing for differences in growth, maturity, fecundity, natural mortality, and fishery selectivity patterns and, as a consequence, the SSC recommended that the SPR harvest rate be used routinely. The SPR harvest rate for each species is being provided so that fishing intensity can be more easily compared and to standardize the basis of rebuilding calculations. If the rebuilding SPR target is revised upward (a reduction in fishing mortality) in the rebuilding plan without changing the target rebuilding year the new rate is set for the duration of the rebuilding period.

Bocaccio

Date declared overfished: March 3, 1999.

Areas affected: Monterey and Conception.

Status of stock: In 2007 it was at 12.7 percent of its unfished spawning biomass:

B0: 13,554 Billion eggs.

B_{MSY}: 5,421 Billion eggs.

T_{MIN}: 2019.

$T_{F=0}$: 2020.

T_{MAX}: 2033.

Target year to rebuild: 2026.

Median year to rebuild: 2023.

SPR target fishing intensity: 77.7 percent.

ABC: 793 mt in 2009 and 2010.

OY: 288 mt in 2009 and 2010.

Biology of the stock: Bocaccio are historically most abundant in waters off central and southern California. Juveniles settle in nearshore waters after a several month pelagic stage. Adults range from depths of 6.5–261 fm (12–478 m). Most adults are caught off the middle and lower shelf at depths between 27 fm and 137 fm (50 and 250 m). Larger fish tend to be found deeper. Bocaccio are found in a wide variety of habitats, often on or near bottom features but sometimes over muddy bottoms. Bocaccio are usually found near the bottom, however, they may also occur as much as 16.4 fm (30 m) off the bottom. Tagging studies have shown that young fish move up to 148 km (92 miles). Maximum age of bocaccio was determined to be at least 40 and perhaps more than 50 years.

Management measures for 2009 and 2010: Bocaccio have historically been taken by commercial trawl and fixed gear vessels and in the recreational fisheries. Adult bocaccio are often caught with Chilipepper rockfish and have been observed schooling with speckled, vermilion, widow, and yellowtail rockfish. South of 40°10′ N. lat. the bottom trawl, limited entry fixed gear, and open access fishing opportunities, in the depths where bocaccio are most commonly encountered, have been reduced through the use of RCAs. To accommodate incidental catch of shelf species, very small limits are allowed to be retained with large footrope and midwater trawl gear, but harvest of bocaccio is prohibited with small footrope trawl gear. Chilipepper rockfish limits for limited entry large footrope and mid water trawl gear are available for the area south of 40°10′ N. lat. and may be reduced inseason if incidental catch of bocaccio is greater than pre-season projections. The Chilipepper rockfish limits are conservative and not expected to result in the bocaccio OY being exceeded. Pink shrimp trawl vessels fishing in waters off the State of California will continue to be required to have and use fin fish excluder devices that are intended to reduce the catch of overfished species including bocaccio. Bocaccio are vulnerable to commercial non trawl gears and to recreational fishing gear. To accommodate incidental catch of bocaccio in commercial fixed gear fisheries, very small limits are allowed to be retained. California recreational fisheries will constrain incidental bocaccio catch with recreational fishery bag limits.

Canary Rockfish

Date declared overfished: January 4, 2000 (65 FR 221).

Affected area: Coastwide.

Status of the stock: In 2007 it was at 32.4 percent of its unfished spawning biomass.

B0: 32,561 mt.

B_{MSY}: 13,024 mt.

T_{MIN}: 2019.

$T_{F=0}$: 2019.
T_{MAX}: 2041.
Target year to rebuild: 2021.
Median year to rebuild: 2020.
SPR target fishing intensity: 88.7 percent.
ABC: 937 mt in 2009, 940 mt in 2010.
OY: 105 in 2009 and 2010.
Biology of the stock: Canary rockfish are a continental shelf (shelf) species. Juveniles settle in nearshore waters after a several month pelagic stage. Adults range from depths of 25–475 fm (46–868 m). Most adults are caught off the middle and lower shelf at depths between 44 fm and 109 fm (80 and 200 m). Larger fish tend to be found in deeper waters. Canary rockfish are usually associated with areas of high relief such as pinnacles, but also occur over flat rock or mud and boulder bottoms. They are usually found near the bottom and are occasionally found off the bottom or in soft-bottom habitats that are atypical for rockfish. A tagging study showed that canary rockfish can migrate up to 700 km (435 miles). The maximum age of canary rockfish is 84 years.

Management measures in 2009 and 2010: Unavoidable incidental catches of canary rockfish occur in trawl, fixed gear, open access, and recreational fisheries targeting groundfish, as well as commercial and recreational fisheries targeting species other than groundfish. Adult canary rockfish are often caught with bocaccio, sharpchin rockfish, yelloweye rockfish, yellowtail rockfishes, and lingcod. Researchers have also observed canary rockfish associated with silvergray and widow rockfish. Management measures intended to limit bycatch of canary rockfish include RCAs, cumulative trip limits to constrain the fishery coastwide, and bycatch limits in the whiting fishery. Canary's wide geographic distribution and catchability in all fisheries makes it more difficult to manage with species specific RCAs, like yelloweye rockfish and cowcod.

Bottom trawling is prohibited in the trawl RCA, which covers depths where canary rockfish have been most frequently caught. Cumulative limits are structured to discourage targeting of shelf species while allowing very low levels of incidental take to be landed. Because vessels fishing with trawl gear shoreward of the trawl RCA are more likely to encounter canary rockfish than those fishing seaward of the RCA, differential trip limits have been used for large footrope, small footrope and selective flatfish trawl gear. To reduce incidental take of canary rockfish in the area north of 40°10′ N. lat., vessels fishing shoreward of the RCAs are required to use selective flatfish trawl gear. By allowing higher limits for large and small footrope gear in areas seaward of the RCAs and prohibiting its use in nearshore areas, there is an incentive for vessels to fish in deeper waters, beyond the range of canary rockfish.

Incidental catch of canary rockfish during the primary season for whiting will be constrained by sector-specific bycatch limits that require closure of the commercial whiting fisheries when reached. For 2009 and 2010 the canary rockfish bycatch limits are: 6.1 mt for the catcher/processor sector, 4.3 for the mothership sector, and 7.6 mt for the shore-based sector. A final 2009 and 2010 whiting ABC and OY will be adopted at the Council's March meeting and the bycatch limits may be reconsidered at that time and adjusted inseason. The non-trawl limited entry fisheries will be constrained by RCAs coastwide that are intended to reduce the catch of canary rockfish. Pink shrimp trawl vessels fishing in waters off the states of Washington, Oregon and California will continue to be required by the states to have and use fin fish excluder devices that are intended to reduce the catch of overfished species including canary rockfish.

Recreational fisheries are managed through bag limits, size limits and seasons. Seasons are shorter than they were in the past in order to reduce catch of canary rockfish. As necessary, seasons can be shortened more and bag limits reduced to stay within the OYs. The retention of canary rockfish is prohibited in the recreational fisheries.

Cowcod

Date declared overfished: January 4, 2000.
Areas affected: Point Conception (34°27′ N. lat.) to the U.S. Mexico boundary.
Status of stock: In 2007 it was at 4.6 percent of unfished spawning biomass.
B0: 2,494 mt.
B_{MSY}: 997 mt.
T_{MIN}: 2060.
$T_{F=0}$: 2061.
T_{MAX}: 2098.
Target (median) year to rebuild: 2072.
SPR target fishing intensity: 82.1 percent.
ABC: 13 mt in 2009 and 14 mt in 2010.
OY: 4 mt in 2009 and 2010.
Biology of the stock: Cowcod are found at depths of 11–200 fm (75–366 m). Cowcod range from central Oregon to central Baja California and Guadalupe Island. However, they are rare off Oregon and Northern California. It has long been argued that smaller cowcod are found at the shallow end of the depth range. Recent submersible work, however, indicates that cowcod size distribution may be more associated with sea floor structure than depth. In Monterey Bay, juvenile cowcod recruit to fine sand and clay sediments at depths of 22–56 fm (40–100 m) during the months of March–September. Adults are found at depths of 50–280 fm (90–500 m) usually on high relief rocky bottom. Adult cowcod are believed to be less abundant in depths greater than 175 fm (323 m).

Management measures in 2009 and 2010: All directed cowcod fishing has been prohibited since 2001. Retention of cowcod will continue to be prohibited for all commercial and recreational fisheries. To prevent incidental cowcod harvest, two Cowcod Conservation Areas (CCAs) (the Eastern CCA and the Western CCA) in the Southern California Bight were delineated to encompass key cowcod habitat areas and known areas of high catches. The CCAs were codified into regulation on November 4, 2003 (68 FR 62374). Fishing for groundfish is prohibited within the CCAs, except that minor nearshore rockfish, California scorpionfish, cabezon, lingcod, and greenling may be taken from waters where the bottom depth is less than 20 fm (36.9 m).

Darkblotched Rockfish

Date declared overfished: January 11, 2001 (66 FR 2338).
Areas affected: Coastwide.
Status of the stock: In 2007 it was at 22.4 percent of its unfished spawning biomass level.
SB0: 30,640 mt.
SB_{MSY}: 12,256 mt.
T_{MIN}: 2015.
$T_{F=0}$: 2018.
T_{MAX}: 2040.
ABC: 437 mt in 2009, 440 mt in 2010.
OY: 285 mt in 2009, 291 mt in 2010.
Target (median) year to rebuild: 2028.
SPR target fishing intensity: 62.1 percent for 2009 and 2010.
Biology of the stock: Darkblotched rockfish are most abundant on the outer continental shelf and slope, mainly north of Point Reyes (38° N. lat.). Most adult darkblotched rockfish are associated with hard substrates on the lower shelf and upper slope at depths between 77 and 200 fm (140 and 365 m). Darkblotched rockfish migrate to deeper waters with increasing size and age. Diurnal migration, rising off bottom at night, is also a likely behavior of darkblotched rockfish. Fish landed in California generally had smaller size at age than fish landed in the two northern states (Oregon and Washington). Size at age in the 2003 and 2004 survey data

did not, however, change significantly with latitude.

Management measures in 2009 and 2010: Because of their deeper distribution, darkblotched rockfish are caught almost exclusively by commercial vessels. Most landings have been made by bottom trawl vessels targeting flatfish on the shelf, and rockfish and the DTS species on the slope. Even once the darkblotched rockfish population is rebuilt to B_{MSY}, its population size will still be small relative to the larger complex of slope rockfish species. Since 2001, darkblotched rockfish have had species specific ABCs and OYs, and were removed from the minor slope rockfish complex. In continued recognition of its status as a minor, but increasingly healthy, stock within a larger stock complex, darkblotched rockfish continues to be managed within the minor slope rockfish trip limits. Management measures intended to limit bycatch of darkblotched rockfish and maintain fishing mortality within the OY specified for 2004 include (1) RCAs and (2) cumulative trip limits.

The boundaries of the RCAs vary by season and fishing sector and may be modified in response to new information about geographical and seasonal distribution of bycatch. The seaward boundary of the trawl RCA was set at a depth that was likely to keep fishing effort in deeper waters and away from areas where the bycatch of darkblotched rockfish was highest. During the winter months, modifications to the line allow for the harvest of flatfish while minimizing the impacts on darkblotched rockfish.

Cumulative limits for slope rockfish north of 40°10′ N. lat. are intended to accommodate incidental take of darkblotched rockfish. These slope rockfish limits are intended to allow vessels to retain slope rockfish taken as bycatch in the DTS (Dover sole, thornyhead, sablefish) fishery. Cumulative limits for splitnose rockfish, a co-occurring species between 40°10′ N. lat. and 38° N. lat., are constrained to reduce the catch of darkblotched rockfish. As needed, trip limits for other co-occurring species are adjusted to reduce darkblotched rockfish bycatch.

Incidental catch of darkblotched rockfish during the primary season for whiting will be constrained by sector-specific bycatch limits that require closure of the commercial whiting fisheries when reached. For 2009 and 2010, the darkblotched rockfish bycatch limits for the commercial whiting fisheries are: 8.5 mt for the catcher/processor fishery; 6.0 mt for the mothership fishery; and 10.5 mt for the shoreside fishery. A final 2009 and 2010 whiting ABC and OY will be adopted at the Council's March meetings in those years, and the bycatch limits may be reconsidered at that time and adjusted inseason.

POP

Date declared overfished: March 3, 1999.

Areas affected: Vancouver and Columbia.

Status of stock: Following the 2007 stock assessment, the stock in 2007 was believed to be at 27.5 percent of unfished spawning biomass level.

SB0: 36,983 units of spawning output.

SB_{MSY}: 14,793 units of spawning output.

T_{MIN}: 2009.

$T_{F=0}$: 2010.

T_{MAX}: 2042.

Target year to rebuild: 2017.

Median year to rebuild: 2011.

SPR target fishing intensity: 86.4 percent.

ABC: 1,160 mt in 2009 and 1,173 mt in 2010.

OY: 189 mt in 2009 and 200 mt 2010.

Biology of the stock: The POP population off the northern U.S. west coast (Columbia and U.S.-Vancouver areas) is at the southern extreme of the stock's range. POP are found on the upper continental slope (slope), 109–150 fm (200–275 m) during the summer and somewhat deeper, 164–246 fm (300–450 m), during the winter. Adults sometimes aggregate up to 16 fm (29 m) above hard bottom features and may then disperse and rise into the water column at night. The maximum age of POP has been determined to be 70 to 90 years. The mean generation time is 28 years. POP recruitment into the spawning population occurs at 3 years of age. Age of maturity and size varies with locality. POP reach 90 percent of their maximum size by age 20 years.

Management measures for 2009 and 2010: POP tend to occur in similar depths as darkblotched rockfish, although they have a more northern geographic distribution. Adult POP are often caught with other upper slope groundfish such as Dover sole, thornyheads, sablefish, and darkblotched, rougheye, and sharpchin rockfish. North of 40°10′ N. lat., POP are caught in similar fisheries as darkblotched rockfish. POP are rarely caught in the recreational fisheries. Management measures for 2009 and 2010 that are intended to limit the bycatch of POP and keep fishing mortality within the OY include (1) RCAs to restrict fishing in areas where POP are found and (2) cumulative trip limits.

Because POP co-occur with darkblotched rockfish, measures to reduce the incidental catch of darkblotched rockfish benefit POP. These measures include seaward trawl RCA boundaries that are established to keep fishing effort in deeper water where POP are less abundant, and cumulative limits for POP and minor slope rockfish that are intended to discourage targeting while allowing low levels of incidental catch to be landed. As needed, trip limits for other co-occurring species may be adjusted to reduce POP bycatch.

Widow Rockfish

Date declared overfished: January 11, 2001.

Areas affected: Coastwide.

Status of stock: In 2007 it was at 35.5 percent of its unfished spawning biomass.

B0: 50,746 million eggs.

B_{MSY}: 20,298 million eggs.

T_{MIN}: 2009.

$T_{F=0}$: 2009.

T_{MAX}: 2023.

Target year to rebuild: 2015.

Median year to rebuild: 2009.

SPR target fishing intensity: 95.0 percent.

ABC: 7,728 mt in 2009, 6,937 mt in 2010.

OY: 522 in 2009 and 509 in 2010.

Biology of the stock: Widow rockfish are most abundant off northern Oregon and southern Washington and are one of the most abundant West Coast rockfish. Young of the year recruit to shallow nearshore waters after spending up to 5 months as pelagic larvae and juveniles in offshore waters. Adults range from bottom depths of 13 fm to 300 fm (24 m to 549 m). Most adults occur near the shelf break at bottom depths between 77 fm to 115 fm (140 m to 210 m). Adults are semi pelagic with their behavior being dynamic. Large concentrations of widow rockfish form at night and disperse at dawn, an atypical pattern for rockfish. Widow rockfish tend to be more easily caught in higher abundance during El Niño (anomalously warm and dry) years. Maximum age of widow rockfish is 59 years.

Management measures in 2009 and 2010: Historically, widow rockfish were caught with yellowtail rockfish in waters off Washington. In the California and Oregon fisheries large pure catches of widow rockfish were taken from midwater schools. Current commercial limits for widow rockfish are intended to accommodate incidental catch and do not provide an incentive for directed fishing. Therefore, the midwater trawl fisheries for yellowtail rockfish, a co-occurring species with widow rockfish,

are also being constrained. Because bottom trawl opportunities for more constraining shelf rockfish species continue to be extremely limited, RCA management measures to restrict fishing on the shelf is expected to be beneficial to the recovery of widow rockfish. Non trawl fisheries have little incidental catch of widow rockfish.

Incidental catch of widow rockfish during the primary season for whiting, will continue to be constrained by sector-specific bycatch limits that require closure of the commercial fisheries when reached. For 2009 and 2010 the widow rockfish bycatch limits are: 153 mt for the catcher/processor sector; 108 mt for the mothership sector; and 189 mt for the shore-based sector. Final 2009 and 2010 Whiting ABCs and OYs will be adopted at the Council's March meeting and the bycatch limits may be reconsidered at that time and adjusted inseason.

Yelloweye Rockfish

Date declared overfished: January 11, 2002.

Areas affected: Coastwide.

Status of stock: In 2007 it was believed to be at 14.5 percent of its unfished spawning biomass.

B0: 3,062 mt.

B_{MSY}: 1,225 mt.

T_{MIN}: 2046.

$T_{F=0}$: 2049.

T_{MAX}: 2090.

Target (median) year to rebuild: 2084.

SPR target fishing intensity: 66.3 percent in 2009 and 2010, 71.9 for 2011 and beyond.

ABC: 31 mt in 2009, 32 mt in 2010.

OY: 17 in each of 2009 and 2010.

Biology of the stock: Yelloweye rockfish juveniles have been found at depths greater than 8 fm (15 m) in areas of high bottom relief. Adults range to depths of 300 fm (549 m). Most adults are caught off the middle and lower shelf at depths between 50 fm and 98 fm (91 m and 180 m). Adult yelloweye rockfish tend to be solitary and are usually associated with areas of high relief with refuges such as caves and crevices, but also occur on mud adjacent to rock structures. They are usually found on or near the bottom. Maximum age of yelloweye rockfish is 115 years. Researchers have observed adult yelloweye rockfish associated with bocaccio, cowcod, greenspotted, and tiger rockfish.

Management measures in 2009 and 2010: Yelloweye rockfish inhabit areas typically inaccessible to trawl gear. In the coastal trawl fishery, incidental catch occurs during the harvest of other target fisheries operating at the fringes of yelloweye rockfish habitat. Yelloweye rockfish is particularly vulnerable to hook and line gear. Currently, only incidental harvest of yelloweye rockfish is allowed in tribal and non tribal hook and line fisheries, and in recreational fisheries.

Under the Council's recommended alternative a 20 fm depth restriction between 40°10′ N. lat. and 42°50.00′ N. lat. (Cape Blanco) would be required for the open access nearshore fishery. Limited entry fixed gear fisheries would have a seaward RCA boundary of 100 fm north of 46°53.30′ N. lat. (Point Chehalis) and a 125 fm seaward RCA boundary between Cape Blanco and 45°03.83 N. lat. (Cascade Head). However, a 100-fm seaward RCA boundary line would be in place for all non-trawl fixed gear fisheries on days when the commercial halibut fishery is open. Yelloweye Rockfish Conservation Areas (YRCAs) will continue to be used to reduce yelloweye rockfish catch in the commercial fixed gear, open access, and recreational fisheries. Six new YRCAs are proposed, five of which are applicable to both commercial non-trawl sectors and the recreational fishery off California, and may be implemented through inseason action if additional management measures are necessary to keep impacts on yelloweye rockfish below their rebuilding OY. The other new YRCA applies to the recreational fishery off Washington, and is designated as an area to be avoided by commercial fishers. YRCAs off the Coasts of Washington, Oregon, and California are defined at § 660.390. Restrictions for all of the status quo YRCAs are unchanged via this action.

Overfishing

The Magnuson-Stevens Act defines ''overfishing'' as ''a rate or level of fishing mortality that jeopardizes the capacity of a fishery to produce the maximum sustainable yield on a continuing basis.'' Under the FMP, ABCs for all species are set at the F_{MSY} level, the level that, for a particular year, is intended to produce maximum sustainable yield for that species on a continuing basis. None of the 2009 or 2010 ABCs would be set higher than F_{MSY} or its proxy, none of the OYs would set higher than the corresponding ABCs, and the management measures in this proposed rule are designed to keep harvest levels within specified OYs.

When evaluating whether overfishing has occurred for any species under the FMP, NMFS compares that species' estimated total catch (landed catch + discard) in a particular year to its ABC for that year. Overfishing is difficult to detect inseason for many groundfish, particularly for minor rockfish species, because most species are not individually identified on landing. Species compositions, based on proportions encountered in samples of landings and extrapolated observer data, are applied during the year. However, final results are not available until after the end of the year.

In the preamble to the proposed rule for the 2007–2008 groundfish specifications and management measures, NMFS discussed overfishing that had occurred in 2004. This proposed rule discusses overfishing estimated to have occurred in 2005 and 2006 and preliminary indicators of whether overfishing occurred on any species in 2007. When new data are available, NMFS updates estimates of whether overfishing has occurred as part of the agency's report to Congress on the Status of U.S. Fisheries (*http://www.nmfs.noaa.gov/sfa/statusoffisheries/SOSmain.htm*).

NMFS estimates that overfishing occurred on petrale sole during the 2005 fishing season, since the total catch of petrale sole exceeded its ABC of 2,762 mt by 4 mt (100.1 percent of the ABC). In 2005, the Dover sole OY of 7,476 mt was exceeded by 31 mt (100.4 percent of the OY), the cabezon OY of 69 mt was exceeded by 11 mt (116 percent of the OY), and the canary rockfish OY of 46.8 mt was exceeded by 1.9 mt (104 percent of the OY). Although the level of catch exceeded the OYs for Dover sole, cabezon and canary rockfish, overfishing did not occur because total catch was below the ABCs of 8,522 mt for Dover sole, 103 mt for Cabezon and 270 mt for canary rockfish. For all remaining groundfish species or species groups, NMFS estimates that total catch was below both ABCs and OYs in 2005.

NMFS estimates that no overfishing occurred during the 2006 fishing season, since no ABCs were exceeded. In 2006, the Dover sole OY of 7,564 mt was exceeded by 166 mt (102.2 percent of the OY), the canary rockfish OY of 47.1 mt was exceeded by 9.9 mt (121 percent of the OY), and the minor rockfish south OY for the nearshore species of 615 mt was exceeded by 96 mt (116 percent of the OY). Although, the level of catch exceeded the OY for these species, overfishing did not occur because total catch was below the ABCs of 8,589 mt for Dover sole, 270 mt for canary rockfish, or 3,412 mt for minor rockfish south. For all remaining groundfish species or species groups, NMFS estimates that total catch was below both ABCs and OYs. NMFS has taken action to prevent the fisheries from exceeding the ABCs and OYs for these species and does not expect that harvest exceedances in 2005 or 2006 will

jeopardize the rebuilding progress for either species.

Preliminary data from the 2007 fisheries show that no ABCs were exceeded in 2007. NMFS will not have complete observer data on the 2007 fisheries until late 2008, at which time NMFS will be better able to analyze total groundfish catch to determine whether overfishing occurred on any other species.

2009–2010 Fishery Management Measures

As discussed earlier in this document, groundfish fishery management measures for 2009–2010 are intended to rebuild overfished species as quickly as possible, taking into account the status and biology of the stocks and the needs of fishing communities. Within the constraints of protecting overfished species, the Council's management measure recommendations are intended to allow fishery participants as much access to healthy stocks as possible. In 2009 and beyond, fishing communities will have to forego much of the available harvestable surplus of healthy groundfish stocks that co-occur with overfished species so that overfished species may be rebuilt as quickly as possible. Management measures intended to address the rebuilding needs of specific overfished species are discussed earlier in this document, in the species-specific sections of ''OY Policies and Rebuilding Parameters for Overfished Species''.

The types of management measures in this proposed rule do not vary significantly from those used in recent years to reduce the incidental catch of overfished species while allowing some harvest of co-occurring healthy stocks. Management measures are intended to allow overfished species to rebuild by reducing their catch in times and areas where they most frequently occur, to minimize bycatch with gear and fishing area restrictions, and to distribute groundfish harvest throughout the year as much as possible to maintain groundfish fishing opportunities and markets. The fisheries management regime tends to be most constrained by protective measures for yelloweye and canary rockfish coastwide. Trawl fisheries are additionally constrained by measures to prevent bycatch of POP, darkblotched, and widow rockfish.

Groundfish management measures that will continue to be used in 2009–2010 include: Trip and bag limits, size limits, differential trip limits by gear type, season openings and closures, large-scale area closures such as the RCAs, gear restrictions, and bycatch limits. In addition to the fishery-specific management measures addressed below, the Council recommended revisions to RCA boundary lines needed to ensure that the lines better approximate the depth contours they are intended to represent and the lines that approximate each depth contour do not intersect or cross over each other. New RCA lines proposed via this action include a new 25-fm (46-m) boundary line approximation off the coast of southern Washington, between 47°31.70′ N. lat. (Queets River) and 46°38.17′ N. lat. (Leadbetter Point). This new modified management line would be available, if necessary, to expand the recreational RCA shoreward as an inseason action to reduce impacts on canary and yelloweye rockfish in this area. In Washington Marine area 4, between 48°02.35′ N. lat. and 47°59.50′ N. lat., the boundary line approximating the 100-fm (183-fm) depth contour, which is generally used as the seaward boundary line for the non-trawl RCA, is expanded seaward to encompass and eliminate fishing effort in an area of known canary and yelloweye rockfish impacts.

Changes to the RCA lines in waters offshore of the state of California are proposed to better approximate depth contours and correct errors. There are sixteen changes to boundary lines that approximate depth contours, used to define the trawl and non-trawl RCAs, proposed in this proposed rule. The Council also recommended new discrete conservation areas off the coasts of Washington and California to reduce fishery impacts to overfished species. As explained in past actions to implement groundfish specifications and management measures, area closures and other fishing restrictions to protect overfished species have been designed to best minimize overfished species bycatch using the mechanisms most appropriate to the fishery managed. As a result, the fishery management regime for recreational fisheries is different than that implemented for commercial fisheries. Yelloweye rockfish are not commonly caught in trawl fisheries; therefore, management measures to minimize incidental catch of yelloweye focus most strongly on constraining the recreational and non-trawl commercial fisheries. Off the coast of Washington, a new recreational closed area is proposed, and would also be designated as an area to be voluntarily avoided for the commercial sectors, called the Westport Offshore YRCA. Off the coast of California, five discrete yelloweye rockfish conservation areas (YRCAs), which include both state and Federal waters, were documented as areas of high yelloweye encounter rates in hook and line fisheries and the Council recommended that these areas could be used as inseason closures, implemented by NMFS and the State, if additional reductions in yelloweye rockfish catch in the California recreational fishery or the commercial non-trawl fishery are necessary during the biennium. These areas include the general areas of Point St. George, South Reef, Reading Rock, and Point Delgada (North and South). This proposed rule would make changes to the groundfish conservation area and RCA boundary line regulations at 50 CFR 660.390 through 660.394, implementing area closures off Washington and defining areas off California, making them available for potential inseason closure, as part of routine recreational management measures.

The management measures proposed in this rule are only part of the overall management strategy for West Coast groundfish. NMFS will continue to require vessels to carry and operate VMS units to monitor fishing locations, and to carry observers when requested by NMFS. NMFS and the states will again be conducting stock assessments over the next two years, which will inform the 2011–2012 specifications and management measures process and provide a gauge for rebuilding progress.

Federal regulations for the West Coast groundfish fishery are found in 50 CFR, subpart G, §§ 660.301 through 660.399. Definitions for terms used in groundfish regulations are at § 660.302. Prohibitions are at § 660.306. Routine and automatic fishery management measures, as identified at § 660.370 and implemented in §§ 660.370 through 660.385 and in Tables 3–5 of subpart G, will continue to be available for revision through the inseason management process. Management measures for the non-trawl sablefish fisheries are found at § 660.372, although daily/weekly sablefish limits are found in Tables 4 and 5 (North) and Tables 4 and 5 (South) of subpart G. Management measures for the primary Pacific whiting season are found at § 660.373, although trip limits for vessels operating outside of the primary season are found in Tables 3 (North) and (South) of subpart G. Coordinates for all of the closed areas affecting the groundfish fisheries, including the EFH conservation areas, are found in §§ 660.390 through 660.399.

Limited Entry Trawl Fishery Management Measures

The types of management measures proposed for the limited entry trawl fishery in 2009–2010 are similar to

those implemented for 2007–2008. The specific closed areas and cumulative landings limits are slightly different than in the past biennium. When compared to management measures at the start of the 2007–2008 biennium, the seaward and shoreward boundaries of the trawl RCA are divided on a finer spatial scale North of 40°10.00′ N. lat. When compared to management measures at the start of the 2007–2008 biennium, landing limits for some species and gear types are more liberal in response to increased harvest specifications resulting from new or updated stock assessments for canary rockfish, sablefish, bocaccio, pacific ocean perch, and widow rockfish. Section ''2009–2010 Groundfish ABCs'' of this proposed rule describes the new stock assessments used in deciding the 2009–2010 harvest specifications. More liberal management measures for certain species and gear types at different times of the year are intended to allow increased harvest of healthy stocks, in times and areas that have lower impacts on overfished groundfish species. More restrictive management measures are intended to respond to the need to rebuild overfished species as quickly as possible, taking into account various factors, and also to implement harvest reductions resulting from a new darkblotched rockfish stock assessment. NMFS's bycatch model for the limited entry trawl fishery does not differ significantly from that used in setting the 2007–2008 fishery management measures, except that new and more recent observer data has been incorporated into that model.

As in past years, trawl fisheries continue to be managed with differing RCAs and cumulative trip limits north and south of 40°10.00′ N. lat. North of 40°10.00′ N. lat., the shoreward boundary of the trawl RCA is set primarily based on the need to reduce canary rockfish bycatch, although its location is also expected to reduce incidental take of other, northern overfished shelf species such as widow and yelloweye rockfish. Most adult canary rockfish are caught off the middle and lower continental shelf, therefore vessels operating shoreward of the RCA are more likely to encounter canary rockfish than those operating seaward of the RCA. At their March 2007 meeting, the Council recommended finer scale spatial management North of 40°10.00′ N. lat. in response to higher than expected canary rockfish bycatch rates from 2005 observer data. On April 17, 2007, NMFS implemented seaward and shoreward boundaries for the northern trawl RCA divided at commonly used geographic coordinates, listed at § 660.302 under ''North-South management area'', in addition to the division at 40°10.00′ N. lat. These routine adjustments to the RCA boundaries and the rationale for setting seaward and shoreward boundaries were discussed in detail in the inseason action that published in the **Federal Register** on April 18, 2007 (72 FR 19390). This proposed rule would continue to use the finer scale spatial management used in 2007 and 2008 and the seaward and shoreward trawl RCA boundaries which will be divided at specific latitudes to reduce impacts to canary rockfish, while allowing harvest opportunities for healthy co-occurring stocks. This approach is primarily based on the need to reduce canary rockfish bycatch, and it is also expected to reduce incidental take of widow and yelloweye rockfish. The Council recommended implementing a shoreward boundary line approximating the 75-fm (137-m) depth contour for the trawl RCA throughout the year, except in the area North of Cape Alava (48°10.00′ N. lat.). Between Cape Alava and the U.S./Canada border, where the highest canary rockfish impacts occurred in 2005, the RCA will extend to the shore, closing the fishing area shoreward of the RCA for the entire year. To reduce incidental take of canary rockfish shoreward of the RCA, vessels operating shoreward of the RCA in the area north of 40°10.00′ N. lat. are required to use selective flatfish trawl gear. The Council considered moving the shoreward boundary of the RCA even closer to the shore than 75-fm (137-m). However, the Council determined that moving trawl operations farther inshore could disturb sensitive Dungeness crab habitat. In addition to the concern about crab habitat, information in 2007 and 2008 indicated that effort decreased more than anticipated when the shoreward boundary of the RCA was brought shoreward of the boundary line approximating the 75-fm (137-m) depth contour. Therefore the shoreward boundary of the trawl RCA is not proposed to be shoreward of the boundary line approximating the 75-fm (137-m) depth contour in the 2009–2010 biennium.

The seaward boundary proposed for the trawl RCA north of 40°10.00′ N. lat. is primarily designed to reduce bycatch of northern slope overfished species, POP and darkblotched rockfish. In 2007 and 2008, the seaward boundaries of the RCA were liberalized by moving them shoreward, with the intent of shifting some of the nearshore effort seaward of the RCA to reduce impacts to canary rockfish. Projected impacts on darkblotched rockfish were within the 2007 and 2008 OYs. Harvestable concentrations of darkblotched rockfish are sometimes found as far south as 38° N. lat., which necessitates a more conservative seaward trawl RCA boundary line for the area between 40°10.00′ and 38° N. lat. than for south of 38° N. lat. North of 40°10.00′ N. lat., the seaward boundary of the Trawl RCA is at a line that approximates 250-fm (458-m) in January–April and November–December (modified for petrale sole fishing in winter months) and at a line that approximates 200-fm (366-m) in May–October.

South of 40°10.00′ N. lat., the trawl RCA boundaries are most affected by the need to reduce incidental catch of bocaccio and canary rockfish, both of which are shelf species. The focus on shelf protection in the south means that the southern trawl RCA is narrower than in the north, which covers both shelf and slope habitat. South of 40°10.00′ N. lat., the trawl RCA is primarily proposed to be between 100-fm (183-m) and 150-fm (274-m) with an extension of the seaward trawl RCA boundary to a petrale-modified 200-fm (368.6-m) line in winter months (January–February and November–December) between 38° and 40°10.00′ N. lat. South of 34°27.00′ N. lat., the trawl RCA around islands is proposed to be between the shoreline and 150-fm (274-m).

Modifications to cumulative trip limits in the non-whiting trawl fishery used in conjunction with closed area management are intended to control catch of target species and to reduce impacts on co-occurring overfished stocks. For the 2009–2010 biennium, cumulative trip limits are adjusted from status quo in response to: Changes in specifications that may increase or decrease allowable catch of target species; changes in specifications or rebuilding plans that may increase or decrease allowable catch of co-occurring overfished species; and the most recently available fishery information from ongoing 2008 fisheries.

Coastwide adjustments in cumulative trip limits are proposed for Dover sole, longspine and shortspine thornyheads, and sablefish (DTS complex) based on the landings information in the 2008 fishery, and new 2009–2010 specifications. Lower than anticipated landings of sablefish early in the 2008 fishery indicate that cumulative limits can be raised in January through April of the 2009–2010 biennium, to provide additional fishing opportunity early in the calendar year and reduce the seasonal increases, that were made

through inseason adjustments in 2008, resulting in a more constant availability of fishing opportunity throughout the calendar year. Generally, longspine and shortspine thornyhead cumulative limits are reduced coastwide in response to reduced 2009–2010 specifications, relative to status quo.

North of 40°10.00′ N. lat., cumulative limits for vessels using selective flatfish trawl gear to target various flatfish species are generally increased due to additional availability of co-occurring canary rockfish in the nearshore area where selective flatfish trawl gear is primarily used.

South of 40°10.00′ N. lat., cumulative limits for splitnose rockfish, sablefish, Dover sole and chilipepper rockfish are increased due to lower than expected catches of these species in 2008. Cumulative limits for minor slope rockfish and darkblotched rockfish are reduced between 40°10.00′ and 38° N. lat. to reduce impacts on overfished darkblotched rockfish, and to keep total mortality within the 2009–2010 darkblotched rockfish OYs.

The tables that further describe species specific cumulative trip limits in the limited entry trawl fishery can be found in tables 3 (North) and 3 (South) of subpart G.

Limited Entry Whiting Trawl Fishery

The Council recommended an assortment of management measures for the Pacific whiting fishery, including: Sector-specific bycatch limits, closing the whiting fishery upon projected attainment of a bycatch limit, mandatory monitoring of Pacific whiting deliveries for fish ticket verification, maximized retention requirements for catcher vessels delivering to mothership processors, exceptions to some regulations for Pacific whiting shoreside vessels that are 75 feet in length or less, new observer coverage requirements for Pacific whiting shoreside vessels that sort catch at sea, and provisions to allow inseason depth-based closures.

Sector-Specific Bycatch Limits

To allow the Pacific whiting industry to have the opportunity to harvest higher OYs, the Council has used bycatch limits to restrict the catch of certain overfished species. With bycatch limits, the industry has the opportunity to harvest a larger amount of whiting, if they can do so while keeping the incidental catch of overfished species within adopted bycatch limits. In recent years, bycatch limits have been used for the most constraining overfished species; darkblotched, canary and widow rockfish. Since 2005, a single bycatch limit for each species has been used for all commercial sectors of the fishery.

Concern that bycatch in one sector would result in the closure of a different sector of the fishery led the Council to recommend sector-specific bycatch limits rather than a single bycatch limit for all commercial sectors. The bycatch limits will be divided among sectors in the same percentages as the whiting is allocated. Therefore, this proposed rule specifies sector-specific bycatch limits for each of the commercial sectors of the Pacific whiting fishery. If a sector-specific bycatch limit is reached or is projected to be reached, the Pacific whiting fishery for that sector would be closed. When a sector is closed because a bycatch limit has been reached or was projected to be reached, unused amounts of the bycatch limit species would be rolled-over to the remaining sectors of the non-tribal Pacific whiting fishery. If a sector reaches its whiting allocation, unused amounts of bycatch limit species would be shifted to those sectors of the non-tribal Pacific whiting fishery that remain open. The following bycatch limits are proposed for 2009 and 2010: for catcher/processors 6.1 mt of canary rockfish, 153.0 mt of widow rockfish; and 8.5 mt of darkblotched rockfish; for motherships 4.3 mt of canary rockfish, 108.0 mt of widow rockfish; and 6.0 mt of darkblotched rockfish; and for shore-based 7.6 mt of canary rockfish, 189.0 mt of widow rockfish; and 10.5 mt of darkblotched rockfish.

When the Council sets final 2009 and 2010 Pacific whiting harvest levels the bycatch limits may be reevaluated, and the Council may make recommendations to revise the limits. It must be noted that bycatch limits are not allocations, but instead are a management tool used to control the potential impacts of the non-tribal Pacific whiting fisheries on other groundfish fisheries. Canary rockfish is the only bycatch limit species for which a harvest guideline is being established specifically for the whiting fishery.

The Council also recommended that NMFS implement regulatory provisions that allow each sector of the whiting fishery to be closed through an automatic action when NMFS projects the attainment of a bycatch limit. Closing on the projected attainment was recommended as a measure to reduce the risk of exceeding a specified bycatch limit and possibly an overfished species OY. The Council recognized that closing upon projected attainment may inadvertently result in a bycatch limit being exceeded or result in the actual catch being well under the bycatch limit, due to imprecise projections. If a sector is closed before actually attaining the bycatch limit, a portion of a sector's Pacific whiting allocation could remain unharvested. However, the Council indicated that closing upon actual attainment, as is currently done, includes too much of a risk of exceeding the bycatch limit and potentially resulting in the OY for a bycatch limit species being exceeded.

At its June 2007 meeting, the Council recommended that NMFS implement Federal regulations for a maximized retention and monitoring program in the Pacific whiting shoreside fishery. The recommended rulemaking would require vessels participating in the Pacific whiting shoreside fishery to procure and pay for video-based electronic monitor system (EMS) services, and for Pacific whiting shoreside first receivers to procure and pay for the services of one independent catch monitor. Catch monitors are individuals who are primarily responsible for collecting catch data that is used for fish ticket verification. NMFS is in the process of implementing the maximized retention program for the shoreside whiting fishery recommended by the Council in June 2007, and anticipates that a final rule will be in place soon after the effective date of the 2009–2010 harvest specifications and management measures proposed by this action.

To ensure the integrity of the shoreside whiting monitoring program, including the increased requirements of sector-specific bycatch limits, the Council recommended that NMFS increase the catch monitor coverage requirements from what had been recommended in June 2007 (one catch monitor per facility) to full coverage in which all Pacific whiting deliveries are monitored by catch monitors (the number of individual catch monitors per facility would vary depending on the hours of operation and the number of Pacific whiting deliveries received each day). The catch monitor coverage requirements recommended by the Council are not being implemented by this action because an analysis of the impacts must first be completed. NMFS intends to implement the catch monitoring provisions in a subsequent rulemaking that implements all of the provisions of the Pacific whiting shoreside fisheries maximized retention and monitoring program. It is anticipated that the proposed maximized retention and monitoring program action will include the following provisions: Catch monitor coverage specifications, requirements to procure catch monitors from NMFS

certified catch monitor providers, and defined responsibilities of first receivers relative to the acceptance of unsorted catch and catch monitoring.

The mothership sector of the whiting fishery is composed of catcher vessels that harvest Pacific whiting and mothership vessels that process, but do not harvest Pacific whiting. Regulations at 50 CFR 660.314(c) and 660.314(e) require mothership processors to pay for and carry two observers. Observers sample catch received from the catcher vessels and provide data used to estimate total catch by species. The catcher vessels are currently unmonitored. In recent years the Council has raised concern about increased incentives to discard bycatch limit species to prevent the fishery from being closed.

To ensure the integrity of the whiting monitoring program, including the increased requirements of sector-specific bycatch limits in the Pacific whiting fishery, the Council recommended that NMFS require catcher vessels delivering to motherships to pay for and use EMS monitoring at all times to insure that catch is being retained. EMS units consist of two or more closed circuit television cameras, global positioning systems (GPS), hydraulic and winch sensors, and on-board data storage. NMFS has determined that EMS is a suitable tool for monitoring full or maximized retention in the whiting fishery. The EMS requirements for catcher vessels in the mothership sector recommended by the Council are not being implemented by this action. Because the infrastructure necessary to support EMS monitoring is not currently in regulation and was not analyzed in the DEIS, NMFS intends to implement the requirements in a subsequent rulemaking. To assure that only qualified businesses provide EMS services, the Federal regulations for a maximized retention and monitoring program for the Pacific whiting shoreside fishery as recommended by the Council in June 2007 includes EMS system specifications and performance standards as well as EMS provider certification requirements. NMFS intends to certify providers through an application and review process in which businesses provide information regarding their ability to provide adequate services to support the EMS monitoring, data storage and data processing needs. NMFS anticipates that the subsequent rulemaking will require the owners of catcher vessels participating in the Pacific whiting mothership fishery to procure EMS services from a NMFS EMS certified service provider and pay all associated costs.

The Council also recommended that NMFS prohibit discarding by catcher vessels in the mothership sector. Because current regulations do not contain language that specifically prohibits catcher vessels in the mothership sector from dumping catch at sea, a prohibition is being added to clarify the intent of the existing regulations. Regulations at § 660.306(i)(2) currently prohibit vessels from interfering with or biasing the sampling employed by an observer by mechanically or physically sorting or discarding catch before sampling. This language was intended to include the dumping of catch at sea by catcher vessels.

Current groundfish regulations at 50 CFR 660.302 define shore-based processing as an activity that occurs at a facility that is permanently fixed to land and involves the preparation or packaging of groundfish for human consumption, retail sale, industrial uses or long-term storage, including, but not limited to, cooking, canning, smoking, salting, drying, filleting, freezing, or rendering into meal or oil. It does not mean heading and gutting unless additional preparation is done. In addition to allowing heading and gutting, the Council recommended that an exemption be provided for the shore-based sector that would allow Pacific whiting shoreside vessels 75 feet in length or less, to remove the tails of whiting and to allow the catch to be frozen to increase the value. The Pacific whiting allocation taken by these vessels would continue to be attributed to the shore-based allocation.

In 2006 and 2007, a single vessel headed and gutted Pacific whiting at sea. The vessel used a smaller net and shorter tows to maintain product quality. Head and gut machines were used at sea and the product was immediately placed in thick slurry of ice. As a result, the vessel was able to significantly increase its at-sea production and ex-vessel price of Pacific whiting. Because the Pacific whiting were only headed and gutted (*i.e.*, the tails were left on) and not frozen, the vessel's activities did not result in the vessel being considered an at-sea processor. Allowing the Pacific whiting to be tailed and frozen would further increase the value of the catch.

Under current regulation, unmonitored Pacific whiting shoreside vessels that sort at sea are allowed to fish within the RCAs. The integrity of the RCAs as well as the ability to monitor bycatch limits was identified as an issue when Pacific whiting shoreside vessels that sort at sea are unmonitored. The Council recommended that NMFS require Pacific whiting shoreside vessels that sort their catch at sea to procure and pay for the services of NMFS-certified observers in the same manner as the at sea processors. Allowing fishers to land value-added Pacific whiting catch is expected to increase exvessel revenues and offset the added overhead cost of observers.

The Council recommended that NMFS implement regulations that allow depth-based closures for the whiting fishery as an inseason management measure when NMFS projects that a sector of the non-tribal Pacific whiting fishery will reach a bycatch limit before the Pacific whiting allocation for the sector is projected to be reached. Regulatory provisions would allow for depth-specific closures using the specified depth-based management lines of 75 fm (137 m), 100 fm (183 m) or 150 fm (274 m) to be used to restrict the fishery by sector. Although bycatch rate estimates vary by depth and sector, the analysis suggests that fishing deeper that 150 fm (274 m) results in reduced canary and yelloweye rockfish rates, while deeper fishing is more likely to result in increased catch of darkblotched and widow rockfish. Maintaining the ability to restrict the Pacific whiting fishery to depths to reduce the catch of bycatch limit species provides the fishery participants with flexibility to avoid overfished species, but maintains a mechanism for further reducing the incidental take if necessary. Taking this flexible approach allows the conditions in the fishery as well as the tradeoffs between the three depleted rockfish species and Chinook salmon to be taken into consideration.

Limited Entry Fixed Gear and Open Access Non-trawl Fishery Management Measures

Management measures for the limited entry fixed gear and open access non-trawl fisheries tend to be similar because the majority of participants in both fisheries use hook-and-line gear. These fisheries will be most constrained by management measures to decrease impacts on yelloweye rockfish. The non-trawl RCA boundaries proposed for 2009–2010 are the same as those implemented for the non-trawl fisheries in 2007–2008, except for the following proposed changes. The seaward and shoreward boundaries of the non-trawl RCA vary along the coast, and are divided at commonly used geographic coordinates, defined in § 660.306, including the status quo division at the north-south management line at 40°10.00′ N. lat. in Northern California.

New divisions of the RCA boundaries are established based on recently available fishery information, indicating that some areas where the non-trawl fishery occurs have higher yelloweye rockfish impacts than others, and the RCA boundaries are adjusted to reduce impacts to yelloweye rockfish in these areas. The seaward boundary between 45°03.83′ N. lat. (Cascade Head) and 42°50.00′ N. lat. (Cape Blanco) is proposed to be moved from the boundary line approximating the 100-fm (183-m) depth contour to the boundary line approximating the 125-fm (229-m) depth contour, except on days when the directed halibut fishery is open, the seaward boundary remains at the line approximating the 100-fm (183-m) depth contour. This change in the seaward boundary is designed to reduce impacts on yelloweye in the limited entry fixed gear sablefish fishery. Also, the shoreward RCA boundary from 42°50.00′ N. lat. to 40°10.00′ N. lat. is proposed to be moved from the boundary line approximating the 30-fm (55-m) depth contour to the boundary line approximating the 20-fm (37-m) depth contour. This change is proposed because WCGOP data has shown higher yelloweye bycatch rates in this area, and this change would attempt to reduce bycatch rates in this specific area. The non-trawl RCA boundaries from North to South are proposed to be as follows: From the U.S./Canada Border and 45°03.83′ N. lat. the non-trawl RCA is proposed to be between the shoreline and a boundary line approximating the 100-fm (183-m) depth contour. Between 45°03.83′ N. lat. and 42°50.00′ N. lat. the non-trawl RCA is proposed to be between the boundary lines approximating the 30-fm (55-m) and the 125-fm (229-m) depth contours. Between 42°50.00′ N. lat. and 40°10.00′ N. lat. the non-trawl RCA is proposed to be between boundary lines approximating 20-fm (37-m) and 100-fm (183-m) depth contours. Between 40°10.00′ N. lat. and 34°27.00′ N. lat. the non-trawl RCA is proposed to be between boundary lines approximating the 30-fm (55-m) and 150-fm (274-m) depth contours. Between 34°27.00′ N. lat. and the U.S. border with Mexico, including waters around islands, the non-trawl RCA is proposed to be between boundary lines approximating the 60-fm (110-m) and 150-fm (274-m) depth contours. The Council also adopted new YRCAs off northern California defined in this proposed rule for later implementation through inseason action if necessary. The boundary lines vary along the coast because of the different abundances of overfished species along the coast.

The Salmon Troll YRCA is found in groundfish regulation at § 660.383 and § 660.390, and in the Pacific Coast salmon regulations at § 660.405.

Like trawl fishery participants, non-trawl vessels are also subject to several groundfish closed areas other than those within the RCA boundary lines and those intended for EFH conservation. The following closed areas apply to all non-trawl vessels, including both open access and limited entry fixed gear vessels, and have not been proposed for modification in 2009 and beyond (§ 660.390): A Cordell Banks Closed Area; closed areas around the Farallon Islands off San Francisco and San Mateo Counties, CA; the Eastern CCA.

The non-trawl fisheries have little to no incidental catch of POP, darkblotched, or widow rockfish. The effects of these fisheries on bocaccio, canary, cowcod, and yelloweye rockfish are constrained as much as possible by the non-trawl RCA, described above, and by the YRCAs and CCAs. Trip limits proposed for the non-trawl fisheries in 2009–2010 are similar to those that applied to these fisheries in 2007–2008. The open access sablefish limit is more conservative than the limited entry limit, recognizing that the open access fleet can expand to an unknown number of participants. Tier limits for the limited entry sablefish-endorsed fleet are higher than in 2007–2008, reflecting the higher sablefish OY for 2009–2010 sablefish harvest specifications: In 2009, Tier 1, 61,296 lb (27,803 kg); Tier 2, 27,862 lb (12,638 kg); Tier 3, 15,921 lb (7,221 kg). For 2010 the limits are as follows, Tier 1, 56,081 lb (25,437 kg); Tier 2, 25,492 lb (11,562 kg); Tier 3, 14,567 lb (6,648 kg).

Similar to the limited entry trawl fishery, landings of spiny dogfish and Pacific cod taken in the non-trawl fisheries will be subject to trip limits throughout the 2009–2010 management cycle. In addition, trip limits for sablefish south of 36° N. lat. were increased above 2007–2008 levels. These limits are increased due to higher specifications for sablefish in this area for 2009–2010 and prohibitions against fishing within the non-trawl RCA limit the effects of these fisheries on overfished species.

Salmon trollers will be allowed to keep incidentally caught lingcod with a ratio limit of 1 lingcod per 15 Chinook, plus 1 lingcod up to a trip limit of 10 lingcod, up to a maximum limit of 400 lbs per month.

The Council recommended mandatory logbooks for the limited entry and open access fixed gear fishing fleets. Development and implementation of a federal logbook system would take more time than is available for this rulemaking. Therefore, it is under consideration for implementation in the future.

Management measures for the limited entry fixed gear fishery, including gear requirements, are found at § 660.382, with management measures specific to the primary sablefish season found at § 660.372. Limited entry fixed gear trip limits are found in Table 4 (North) and Table 4 (South) of subpart G of part 660. Management measures for the open access fishery, including gear requirements, are found at § 660.383. Open access trip limits are found in Table 5 (North) and Table 5 (South) of subpart G of part 660.

Open Access Non-Groundfish Trawl Gear Fisheries Management Measures

Open access non-groundfish trawl gear (used to harvest ridgeback prawns, California halibut, sea cucumbers, and pink shrimp) is managed with ''per trip'' limits, cumulative trip limits, and area closures. Trip limits in 2009–2010 are similar to those in 2007–2008. The species-specific open access limits apply; in addition vessels may not exceed overall groundfish limits. As in past years, the pink shrimp fishery is subject to species-specific limits that are different from other open access limits for lingcod and sablefish. Also, as in past years, thornyheads may not be taken and retained in the open access fisheries north of 34°27.00′ N. lat.

Trawling with open access non-groundfish gear for pink shrimp will be permitted within the trawl RCA; however, the states require pink shrimp trawlers to use finfish excluder devices to reduce their groundfish bycatch, particularly to prevent bycatch mortality for canary and other rockfishes. Trawling for ridgeback prawns, California halibut, and sea cucumber is subject to the same RCA area closures as the limited entry trawl fishery, except that ridgeback prawn trawling will be permitted out to a boundary line approximating the 100-fm (183-m) depth contour if and when the inshore boundary line of the limited entry trawl RCA is moved shallower than 100-fm (183-m). RCA restrictions off California are particularly intended to reduce bycatch and bycatch mortality for southern and coastwide overfished species such as bocaccio, cowcod, and canary rockfish. The CCA boundaries are not proposed to be changed for open access non-groundfish trawl vessels. Management measures for the open access fisheries, including gear requirements, are found at § 660.383.

Trip limits are found in Table 5 (North) and Table 5 (South) of subpart G of part 660.

Recreational Fisheries Management Measures

Recreational fisheries management measures are designed to limit catch of overfished and nearshore species to sustainable levels while also allowing viable fishing seasons. Overfished species that are taken in recreational fisheries are bocaccio, cowcod, canary, and yelloweye rockfish. Because sport fisheries are more concentrated in nearshore waters, the 2009–2010 recreational fishery management measures are also intended to constrain catch of nearshore species such as black rockfish and cabezon. These protections are particularly important for fisheries off California, where the bulk of West Coast recreational fishing occurs. Washington, Oregon, and California each proposed, and the Council recommended, different combinations of seasons, bag limits, area closures, and size limits to best fit the requirements to rebuild overfished species found in their regions, and the needs and constraints of their particular recreational fisheries.

Recreational fisheries in northern California and Washington are constrained by the need to reduce yelloweye impacts. In order to reduce yelloweye impacts the Council adopted a new yelloweye RCA (YRCA) off Westport, Washington which would prohibit fishing for, and retention and possession of groundfish and halibut. The Council also adopted new YRCAs off northern California defined in this proposed rule for later implementation through inseason action as necessary. The status quo catch sharing plan for southern black rockfish OY of 42:58 between California and Oregon is proposed in this rule.

Off Washington, recreational fishing for groundfish and halibut will continue to be prohibited inside the North Coast Recreational YRCA, a C-shaped closed area off the northern Washington coast, and the South Coast Recreational YRCA. In addition, a new Recreational YRCA is established, called the Westport Offshore YRCA. Coordinates for all of these YRCAs are defined at 50 CFR 660.390. The RCA for recreational fishing off Washington will be the same as in 2008. The groundfish bag limit off Washington will remain the same as in 2007–2008: 15 aggregate bottomfish bag limit; 10 rockfish sub-limit with no retention of canary or yelloweye rockfish; 2 lingcod sub-limit, with the lingcod minimum size of 22 inches (56 cm). The lingcod seasons in 2009 and 2010 will be similar to those in 2007–2008, beginning in mid-March and ending in mid-October, although the season north of 48°10.00′ N. lat. (Cape Alava) will not begin until mid-April. South of Leadbetter Point off the state of Washington, when halibut are onboard the vessel from May through September, there will be no retention of groundfish, except sablefish and Pacific cod.

Off Oregon, recreational fishing for groundfish will be closed offshore of a boundary line approximating the 40-fm (73-m) depth contour from April through September. Recreational fisheries participation is heaviest during these months and this closure is intended to move the groundfish fisheries inshore of the continental shelf to reduce incidental catch of canary and yelloweye rockfish. The Stonewall Bank YRCA currently in place for the recreational Pacific halibut fishery off Oregon (71 FR 10850, March 3, 2006) will remain the same as in 2007–2008. In addition, EFH Conservation Areas, listed at § 660.306, also apply to recreational fisheries using bottom contact gear off Oregon. The Oregon recreational fishery marine fish bag limit will be increased from 8 to 10 fish in aggregate. As in waters off Washington, retention of yelloweye and canary rockfish continues to be prohibited. The lingcod bag limit will increase from 2 fish to 3 fish per day, and the size limit will remain 22 inches (56 cm), as in Washington. The flatfish daily bag limit will remain 25 fish in aggregate (excluding Pacific halibut).

For 2009–2010, recreational fisheries off California are proposed to be managed as six separate areas, up from four in 2007–2008, to allow more precision and flexibility in minimizing impacts on overfished stocks: The Northern area is defined as the area from the Oregon/California border to 40°10.00′ N. lat.; the North-Central North of Pt. Arena area is defined as the area from 40°10.00′ N. lat. to 38°57.00′ N. lat.; the North-Central South of Pt. Arena area is defined as the area from 38°57.00′ N. lat. to 37°11.00′ N. lat.; the South-Central Monterey area is defined as the area from 37°11.00′ N. lat. to 36° N. lat.; the South-Central Morro Bay area is defined as the area from 36° N. lat. to 34°27.00′ N. lat. and the South area is defined as the area from 34°27.00′ N. lat. to the U.S./Mexico border. California updated its recreational fisheries catch model with data from the California Recreational Fisheries Survey (CRFS) to make recommendations to the Council for the 2009–2010 fisheries. Season and area closures differ between California regions to better prevent incidental catch of overfished species according to where those species occur and where fishing effort is strongest. The California-wide combined bag limit for the Rockfish-Cabezon-Greenling (RCG) complex would continue to be 10 fish per day when the season is open. RCG sub-bag limits will also remain the same, except that the cabezon limit statewide will increase from one fish to two fish per day and the bocaccio limit will increase south of 40°10.00′ from one fish to two fish per day, making the bag limit consistent for the entire state of California. Fishing for lingcod will be closed in the winter months to prevent catch of lingcod during its spawning and nesting season. This rule proposes to remove the gear restriction regarding maximum hook size, number of hooks, and weight for sanddabs and ''other flatfish''. The efficacy of this gear restriction was analyzed using the CRFS database and was shown to have a minimal reduction on impact rates of overfished species.

Between the Oregon/California border to 40°10.00′ N. lat. the recreational fishery will be open May 15 through September 15 (April–November for lingcod) in waters shallower than the 20-fm (37-m) depth contour. Between 40°10.00′ N. lat. and 38°57.00′ N. lat. the recreational fishery will be open May 15–August 15 in waters shallower than the 20-fm (37-m) depth contour. Between 38°57.00′ N. lat. and 37°11.00′ N. lat. the recreational fishery will be open June 13–October 31 in waters shallower than a boundary line approximating the 30-fm (55-m) depth contour. Between 37°11.00′ N. lat. and 36° N. lat. the recreational fishery will be open May 1–November 15 in waters shallower than a boundary line approximating the 40-fm (73-m) depth contour. Between 36° N. lat. and 34°27.00′ N. lat. the recreational fishery will be open May 1–November 15 in waters shallower than a boundary line approximating the 40-fm (73-m) depth contour. Between 34°27.00′ N. lat. and the U.S./Mexico border, the recreational fishery will be open from March–December in waters shallower than a boundary like approximating the 60-fm (110-m) depth contour. These time and area closures are primarily intended to reduce catch of yelloweye rockfish, as well as other co-occurring overfished rockfish species such as bocaccio and canary rockfish. Cowcod catch in the area south of 34°27.00′ N. lat. continues to be constrained by the CCAs, which are closed throughout the year to recreational fishing for groundfish. This proposed rule does not propose to modify the fishing restrictions within

the CCAs for the recreational fisheries. In addition, EFH Conservation Areas, listed at § 660.306, apply to recreational fisheries using bottom contact gear off California.

Management measures for recreational fisheries off all three West Coast states are found at § 660.384.

Washington Coastal Tribal Fisheries Management Measures

In 1994, the United States formally recognized that the four Washington coastal treaty Indian tribes (Makah, Quileute, Hoh, and Quinault) have treaty rights to fish for groundfish in the Pacific Ocean, and concluded that, in general terms, the quantification of those rights is 50 percent of the harvestable surplus of groundfish that pass through the tribes' usual and accustomed fishing areas (described at 50 CFR 660.324).

For those species with tribal allocations, the tribal allocation is subtracted from the species OY before limited entry and open access allocations are derived. The tribal fisheries for sablefish, black rockfish, and whiting are separate fisheries and are not governed by the limited entry or open access regulations or allocations. The tribes regulate these fisheries so as to not exceed their allocations.

The tribal harvest guideline for black rockfish is 9.1 mt (20,000 lbs) for the management area between the U.S./Canada border and Cape Alava (48°10.00′ N. lat.) and is 4.5 mt (10,000 lbs) for the management area between Destruction Island and Leadbetter Point (46°38.17′ N. lat.). Similar to past years, the tribal sablefish set aside is 10 percent of the OY north of 36° N. lat., less 1.6 percent for estimated discard mortality. For both 2009 and 2010, the tribal sablefish set aside is 694 mt.

The regulations at 50 CFR 660.324(d) establish the process by which the tribes with treaty fishing rights in the area covered by the Pacific Coast Groundfish Fishery Management Plan (FMP) request new allocations or regulations specific to the tribes, in writing, before the first of the two meetings at which the Council considers groundfish management measures. The regulations further state ''the Secretary will develop tribal allocations and regulations under this paragraph in consultation with the affected tribe(s) and, insofar as possible, with tribal consensus.'' These procedures employed by NOAA in implementing tribal treaty rights under the FMP, in place since May 31, 1996, were designed to provide a framework process by which NOAA Fisheries can accommodate tribal treaty rights by setting aside appropriate amounts of fish in conjunction with the Council process for determining harvest specifications and management measures. The Council's groundfish fisheries require a high degree of coordination among the tribal, state, and federal co-managers in order to rebuild overfished species and prevent overfishing, while allowing fishermen opportunities to sustainably harvest over 90 species of groundfish managed under the FMP. The management approach for whiting has been developed following these procedures.

Since 1996, only the Makah Tribe has prosecuted the tribal fishery for Pacific whiting. However, for the 2009–2010 harvest specification cycle, three of the four coastal tribes indicated their intent to participate at some point during this two-year period. The Quinault Nation indicated their intent to start fishing in 2010, and both the Quileute and Makah Tribes indicated they intended to fish in both 2009 and 2010. All three tribes notified NOAA Fisheries during the November 2007 Council meeting and subsequently followed up with written proposals prior to the March 8–14, 2008 Council meeting as anticipated in the applicable regulations.

After the initial tribal requests were received, several meetings and discussions occurred between the tribal, state, and federal co-managers. These meetings resulted in an understanding by NOAA and the State of Washington that a tribal allocation of 50,000 mt. in 2009 would satisfy the needs expressed by the Quileute and the Makah. This was based on the separate requests of the Quileute for up to 8,000 mt. in 2009 and the Makah for up to 42,000 mt. in 2009, for a total of 50,000 mt.

Based on the requests received from the Tribes during the schedule specified in 50 CFR § 660.324, the Pacific Fisheries Management Council recommended a tribal set-aside of 50,000 metric tons (mt.) for 2009 only, with the Makah Tribe to manage 42,000 mt., including the bycatch amounts associated with this portion of the set-aside, and the Quileute Tribe to manage 8,000 mt., including the bycatch amounts associated with this portion of the set-aside. The Council also requested that NOAA Fisheries convene the co-managers, including the states of Oregon and Washington, and the Washington coastal treaty tribes, in government to government discussions to develop a proposal for 2010 and beyond for tribal set-asides of Pacific Whiting. In accordance with this recommendation, NOAA Fisheries proposes an overall Tribal set-aside of 50,000 mt. for 2009 only. Further, NOAA proposes interim individual Tribal set-asides for the Quileute and Makah Tribes in the amounts of 8,000 mt. and 42,000 mt., respectively, which represents the amounts requested or agreed upon at the time the shares of the 2009 fishery were being established by the Council in accordance with the procedures set forth in 50 CFR 660.324. These interim individual Tribal set-asides for 2009 only are not in any manner to be considered a determination of treaty rights to the harvest of Pacific whiting for use in future fishing seasons, nor do they set precedent for individual Tribal allocations of the Pacific whiting resource: the amounts being set aside for each tribe for 2009 are based on the timely requests from the tribes at the June Council meeting.

NMFS and the co-managers have also begun the process of determining the long-term tribal allocation for whiting. They met at the September 2008 Council meeting and agreed on a process in which NOAA would pull together the current information regarding whiting, circulate it among the co-managers, seek comment on the information and possible analyses, and then prepare analyses of the information to be used by the co-managers in developing a tribal allocation for use in 2010 and beyond. This process is on-going. Its goal is agreement among the co-managers on a total tribal allocation for incorporation into the Council's planning process for the 2010 season. The further goal is to provide the tribes the time and information to develop the inter-tribal allocation or other necessary management agreement.

NOAA Fisheries believes that the 50,000 mt. interim set aside for 2009 only, although higher than the prior tribal set asides, is still clearly within the tribal treaty right to Pacific whiting. Although as described above, further scientific review will occur in late 2008 and early 2009, current knowledge on the distribution and abundance of the coastal Pacific whiting stock reveals that 50,000 mt. lies within the range of a tribal treaty right to Pacific whiting. As described above, the co-managers are working to determine the long-term tribal set-aside for 2010 and beyond before the Council planning for the 2010 whiting season concludes.

The tribes do not have formal allocation for Pacific cod or lingcod; however, the Council recommended adopting a tribal proposal for tribal Pacific cod and lingcod harvest guidelines in 2009 and 2010. In both 2009 and 2010, the tribes will be subject to an annual 400-mt Pacific cod harvest guideline and a 250 mt harvest guideline for lingcod. Spiny dogfish,

thornyheads, and several rockfish species taken in tribal fisheries will be managed via limited entry trip limits, described below.

For some species for which the tribes have a modest harvest, no specific allocation has been determined. Rather than try to reserve specific allocations for the tribes, NMFS is establishing trip limits recommended by the tribes and the Council to accommodate tribal fisheries. The Makah tribe is proposing a directed longline fishery for spiny dogfish, in which the fishery would be restricted to limited entry fixed gear cumulative trip limits.

For rockfish species, the 2009–2010 tribal fisheries will operate under trip and cumulative limits, and will be required by tribal regulations to fully retain all overfished and marketable rockfish species. All tribal fisheries are restricted to limited entry cumulative limit for longspine and shortspine thornyheads. For Other Minor Nearshore, Shelf and Slope rockfish, all tribal fisheries are restricted to a 300-lb (136-kg) per trip limit for each species group, or equal to the limited entry trip limits North of 40°10.00′ N. lat. if trip limits for those species groups are made less restrictive than 300-lb per trip through inseason adjustments during 2009–2010. For canary and yelloweye rockfish, all tribal fisheries are restricted to trip limits of 300-lb (136-kg) and 100-lb (45-kg), respectively. The tribes will continue to develop depth, area, and time restrictions in the directed tribal Pacific halibut fishery in order to minimize impacts on yelloweye rockfish. Tribal fishing regulations, as recommended by the tribes and the Council and adopted by NMFS, are in Federal regulations at 50 CFR 660.385.

Federal and State Jurisdiction

The management measures herein, as well as Federal regulations at 50 CFR part 660, subpart G, govern groundfish fishing vessels of the United States in the U.S. EEZ from 3–200 nautical miles offshore of the coasts of Washington, Oregon, and California. The States of Washington, Oregon, and California retain jurisdiction in state waters from 0–3 nautical miles offshore. This is true even though boundaries of some fishing areas cross between Federal and state waters. Under their own legal authorities, the states generally conform their state regulations to the Federal management measures, so measures that apply to Federal and state waters are the same. This is not true in every case, however, and fishers are advised to consult both state and Federal regulations if they intend to fish in both state and Federal waters.

Groundfish stocks are distributed throughout Federal and State waters. Therefore, the Federal harvest limits (OYs) include fish taken in both Federal and State waters, as do vessel trip limits for individual groundfish species. Other Federal management measures related to federally-regulated groundfish fishing also apply to landings and other shoreside activities in Washington, Oregon and California.

Housekeeping Measures

NMFS is proposing to correct and update the definitions in § 660.302 as a housekeeping measure within this action. Changes to the definitions section pertaining to commonly used geographic coordinates and prohibited species are intended to improve the grammar and comprehensibility of the regulatory language and to correct misspellings. Housekeeping changes to the definitions do not change the intent or effect of those prohibitions. NMFS is also proposing to correct and update the description of the limited entry fixed gear sablefish primary season dates in § 660.303 and § 660.372. Changes to these sections pertaining to primary season dates are intended to improve the grammar and comprehensibility of the regulatory language. Housekeeping changes to the season dates description do not change the intent or effect of the primary sablefish season dates. NMFS is also proposing to clarify language as § 660.373(b)(3)(ii) regarding cumulative trip limits for whiting vessels using multiple trawl gear types. Changes to these sections pertaining to cumulative trip limits in the whiting fishery are intended to improve the grammar and comprehensibility of the regulatory language. Housekeeping changes to the cumulative trip limit description do not change the intent or effect of the cumulative trip limits in the whiting fishery. In addition, any references to the years 2007 or 2008 are removed, or revised to read 2009 or 2010, as appropriate.

Classification

At this time, NMFS has preliminarily determined that the 2009–2010 groundfish harvest specifications and management measures, which this proposed rule would implement, are consistent with the national standards of the Magnuson-Stevens Act and other applicable laws. NMFS, in making that final determination, will take into account the data, views, and comments received during the comment period.

A DEIS was prepared for the 2009–2010 groundfish harvest specifications and management measures. The DEIS includes an RIR and an IRFA. The Environmental Protection Agency published a notice of availability for the draft EIS on August 29, 2008 (73 FR 50962.) A copy of the DEIS is available online at *http://www.pcouncil.org/.*

The Council considered two sets of alternatives for 2009–2010 groundfish management, the first set of alternatives addressed the selection of ABCs and OYs and the second set of alternatives provided a range of management measures based on the initial range of OYs considered. For species that were not overfished, and for which there was no new stock assessment information the Council considered only a single ABC alternative. For overfished species, and species with new or updated stock assessments the Council narrowed the range of ABC/OY alternatives by eliminating the no harvest alternative and by eliminating some of the harvest alternatives at the higher end of the range. Then the Council arranged suites of OY alternatives for overfished species that ranged from the low end to the high end of the range of ABCs/OYs, so that management measures could be considered for that range of overall harvest.

The range of management measure alternatives intended to keep total catch at the low end of the ABC/OY alternatives are considered here, since these were the alternatives the Council evaluated for their effects on small entities. Management measure alternatives included the no action alternative, which would have implemented the 2007–2008 regime for 2009–2010; and a range of alternative management measures that would be necessary to keep the cumulative impacts of all sectors of the fishery below the preliminarily preferred OYs for overfished species. All of the alternatives included management measures intended to constrain target fisheries for healthy stocks to minimize the effects of the fisheries on rebuilding stocks.

Each of the alternatives analyzed by the Council was expected to have different overall effects on the economy. Among other factors, the DEIS for this action reviewed alternatives for expected increases or decreases in revenue and income from 2007 levels. Alternative 1 was expected to decrease annual income, as compared to the no action alternative, from combined recreational angler expenditures and commercial fisheries landings by $75.2 million, and decrease the number of coastwide fisheries-related jobs by 3,226 jobs. Alternative 2 was expected to decrease annual income, as compared to the no action alternative, from combined recreational angler

expenditures and commercial fisheries landings by $34.1 million, and decrease the number of coastwide fisheries-related jobs by 1,446 jobs. Alternative 3 was expected to increase annual income, as compared to the no action alternative, from combined recreational angler expenditures and commercial fisheries landings by $1.8 million, and increase the number of coastwide fisheries-related jobs by 41 jobs. The Council's preferred alternative was expected to have a range of annual income effects, depending on the level of Pacific whiting OYs chosen in 2007 and 2008, from decreasing annual income by $37.2 million at the low whiting OY to increasing annual income by $0.6 million, as compared to the no action alternative, from combined recreational angler expenditures and commercial fisheries landings. The Council's preferred alternative was expected to have a range of annual employment effects, depending on the level of Pacific whiting OYs chosen in 2007 and 2008, from decreasing employment by 1,699 jobs at the low whiting OY to decreasing employment by 7 jobs at the high whiting OY. The Council's preferred alternative is primarily designed to meet the overfished species rebuilding requirement of the Magnuson-Stevens Act to rebuild overfished species as quickly as possible, taking into account the status and biology of the stocks and the needs of fishing communities.

The Council's final preferred alternative was developed through an integrated approach of analyzing alternative suites of rebuilding harvest levels and rebuilding trajectories for all of the overfished species, in the same manner that was used for 2007 and 2008 and Amendment 16–4. This approach allowed the Council to develop a management package that focused the greatest protection on the most sensitive overfished species and the most vulnerable fishing communities, in order to meet the Magnuson-Stevens Act requirement to rebuild as quickly as possible, taking into account the status and biology of the overfished stocks and the needs of fishing communities. For non-overfished species, the effects of this action will be that they will be harvested in 2009–2010 at or below MSY harvest levels. Harvests of most non-overfished species will not achieve their MSY levels, primarily because their harvest will be constrained to achieve faster rebuilding of co-occurring overfished species.

The economic effect of this action is that many fishery sectors are expected to achieve social and economic benefits that are similar to status quo levels. However, some sectors are more or less severely affected by management measures to rebuild overfished species. Although the yelloweye rebuilding period is the same as the status quo T_{TARGET}, the OYs for 2009 and 2010 are lower than in past years. These lower yelloweye OYs will negatively affect northern hook-and-line fisheries, particularly the recreational fisheries. The increase in the English sole and arrowtooth flounder OYs, and the expected stable whiting OY, will stabilize the effects of this action on the trawl fisheries. The increase in the sablefish OY will positively affect all of the commercial fisheries. On a coastwide basis, the commercial ex-vessel revenues for the major directed groundfish sectors are estimated to be approximately $104 million, and the number of recreational bottomfish charter boat trips is estimated to be 399,000. These figures are 124 percent of 2007 exvessel revenues, and 96 percent of 2007 recreational charter boat trips.

This proposed rule has been determined to be not significant for purposes of Executive Order 12866.

This proposed rule will regulate businesses that harvest groundfish. According to the Small Business Administration, a small commercial harvesting business is one that has annual receipts under $4.0 million and a small charterboat business is one that has annual receipts under $6.5 million. The Council estimates that nearly 2,600 small entities harvest groundfish. These entities include those that either target groundfish or harvest groundfish as bycatch and include limited entry trawlers and fixed gear, open access participants, the west coast charterboat fleet, and the tribal fleets. Included in this estimate are businesses, probably fewer than 30, that should be classified as ''large'' businesses as they are affiliates or components of large processing companies. Following past practice, the Council classifies the four catcher-processors that fish and process in the whiting fishery ''large'' entities as they are components of large international seafood companies.

Noting the exceptions above, the Council has classified all harvesters in the groundfish fishery as ''small businesses.'' Therefore, projected impacts for the fishery provide the context for the impacts on these businesses. Chapter 7 of the DEIS provides the analysis that underlies the RIR and IRFA analysis found in Chapter 10 of the DEIS and the following discussion. The analysis provides projections that compare various alternatives considered including: 2007, No-Action (status quo regulations), and Council's preferred (regulations associated with this rule). For the commercial fleets, the Council's preferred Alternative leads to $104 million in projected ex-vessel revenues. This is $13 million greater than the No-Action Alternative projection—$91 million and $20 million greater than those earned in 2007. These increases are from the increase in the sablefish OY and the use of the 2008 whiting OY for projecting the 2009 and 2010 whiting OYs. In 2007, the commercial and tribal fleets harvested 5,200 mt of the 5,900 mt sablefish OY and received about $21 million in ex-vessel revenues. The proposed 2009–10 sablefish OYs are about 8,400 mt each—a 46 percent increase. In 2007, whiting vessels harvested about 86 percent of the 243,000 OY, earning about $39 million in ex-vessel revenues. The 2008 OY is 269,000 mt—an 11 percent increase. Please note that in 2008, it is likely that harvests will reach only 60 percent of this OY.

The Council's analysis provides impacts by gear group or fishery. Under these proposed regulations, the projected commercial ex-vessel revenues for the non-tribal directed groundfish groups are about $90 million yearly. These figures represent slight increases from the No-Action (status quo) alternative. Forecast revenues for the limited entry non-whiting trawl fleet are higher than those forecast under previous years' (2007–2008) management regime. The prime reason for this increase is the increase in the sablefish OY as opposed to changes in the rebuilding species OYs. However, the proposed area-based management controls for this fishery are likely to be more limiting than those developed for the 2007–2008 fisheries. These changes will lead to a decrease in fishable area and a potential increase in the cost of fishing because vessels traveling to and fishing at deeper depths will need more fuel. The projected revenues earned by limited entry whiting fishery (which includes the catcher-processor fleet) are similar to those projected for the previous biennial period. However, the potential amount of ex-vessel revenue will chiefly depend on the Pacific whiting assessment, adopted yearly by the Council during the March meeting. Fixed gear sablefish harvesters will produce more revenue than earned in the 2007–08 period because of the higher sablefish OY. However, similar to the situation for limited entry trawlers, area management will be more restrictive and cause harvesting costs to rise. The nearshore groundfish fishery

will be able to reach ex-vessel revenues that equal the status quo but also will face increased area limits. Under the proposed rules, tribal groundfish fisheries should produce the same amount of ex-vessel revenues and personal income as under the No-Action Alternative.

For the coastwide recreational fishery, the projected number of charterboat and private angler trips associated with this rule is higher under the proposed compared to the No Action alternative and are less than in 2007. Under the No Action Alternative, 1.2 million angler trips are projected. These trips would lead to an estimated $114 million in angler expenditures and $90 million in personal income (profits, wages, and other income that result from angler expenditures and remain in fishing communities). Under the Council-preferred Alternative, anglers will take an estimated 1.27 million trips and spend $118 million and yield $93 million in personal income. This is an increase of 3 percent compared to No Action alternative but lower than the 2007 levels of expenditure ($122 million) and personal income ($96 million). As groundfish are caught in targeted bottomfish trips and in targeted trips for halibut, salmon, tuna and other species, these estimates are projections for the total west coast recreational fishery. For groundfish-targeted trips only, the No Action Alternative leads to $48 million in personal income. This is slightly down from 2007 levels of $51 million. Charterboats are considered small businesses. Under these proposed regulations, coastwide, the projected annual number of charterboat trips for all species is 399,000 trips. This is a decrease from 2007 levels of 414,000 trips and a slight increase from the No-Action level of 392,000 trips. The impacts to the recreational sectors are driven by the OYs for yelloweye rockfish, canary rockfish, and to a lesser extent bocaccio and widow rockfish. The 2009–10 yelloweye rockfish OYs under the final Council preferred alternative represent a decrease of 3 mt from No Action levels. Management measures designed so as not to exceed the yelloweye rockfish OY also keep recreational catch within harvest guidelines for other potentially constraining species, such as canary rockfish. The proposed yelloweye bycatch reduction measures include restricting recreational fisheries to depths shallower than 20 fm in certain areas and/or during certain months and expanding areas to protect yelloweye rockfish.

There are no new reporting, record-keeping, and other compliance requirements in the proposed rule. Within its recommendations for the 2009 Specifications and Management measures, the Council recommended mandatory logbooks for the limited entry and open access fixed gear fishing fleets. However, development and implementation of a Federal logbook system would take more time than is available for this rulemaking and will be considered for implementation in the future. References to collections-of-information made in this action are intended to properly cite those collections in Federal regulations, and not to alter their effect in any way.

No Federal rules have been identified that duplicate, overlap, or conflict with this action.

NMFS issued Biological Opinions under the ESA on August 10, 1990, November 26, 1991, August 28, 1992, September 27, 1993, May 14, 1996, and December 15, 1999, pertaining to the effects of the Pacific Coast groundfish FMP fisheries on Chinook salmon (Puget Sound, Snake River spring/summer, Snake River fall, upper Columbia River spring, lower Columbia River, upper Willamette River, Sacramento River winter, Central Valley spring, California coastal), coho salmon (Central California coastal, southern Oregon/northern California coastal), chum salmon (Hood Canal summer, Columbia River), sockeye salmon (Snake River, Ozette Lake), and steelhead (upper, middle and lower Columbia River, Snake River Basin, upper Willamette River, central California coast, California Central Valley, south/central California, northern California, southern California). These biological opinions have concluded that implementation of the FMP for the Pacific Coast groundfish fishery was not expected to jeopardize the continued existence of any endangered or threatened species under the jurisdiction of NMFS, or result in the destruction or adverse modification of critical habitat.

NMFS reinitiated a formal ESA section 7 consultation in 2005 for both the Pacific whiting midwater trawl fishery and the groundfish bottom trawl fishery. The December 19, 1999 Biological Opinion had defined an 11,000 Chinook incidental take threshold for the Pacific whiting fishery. During the 2005 Pacific whiting season, the 11,000 Chinook incidental take threshold was exceeded, triggering reinitiation. Also in 2005, new WCGOP data became available, allowing NMFS to complete an analysis of salmon take in the bottom trawl fishery.

NMFS prepared a Supplemental Biological Opinion dated March 11, 2006, which addressed salmon take in both the Pacific whiting midwater trawl and groundfish bottom trawl fisheries. In its 2006 Supplemental Biological Opinion, NMFS concluded that catch rates of salmon in the 2005 whiting fishery were consistent with expectations considered during prior consultations. Chinook bycatch has averaged about 7,300 over the last 15 years and has only occasionally exceeded the reinitiation trigger of 11,000. Since 1999, annual Chinook bycatch has averaged about 8,450. The Chinook Evolutionarily Significant Units (ESUs) most likely affected by the whiting fishery have generally improved in status since the 1999 ESA section 7 consultation. Although these species remain at risk, as indicated by their ESA listing, NMFS concluded that the higher observed bycatch in 2005 does not require a reconsideration of its prior ''no jeopardy'' conclusion with respect to the fishery. For the groundfish bottom trawl fishery, NMFS concluded that incidental take in the groundfish fisheries is within the overall limits articulated in the Incidental Take Statement of the 1999 Biological Opinion. The groundfish bottom trawl limit from that opinion was 9,000 fish annually. NMFS will continue to monitor and collect data to analyze take levels. NMFS also reaffirmed its prior determination that implementation of the Groundfish FMP is not likely to jeopardize the continued existence of any of the affected ESUs.

Lower Columbia River coho (70 FR 37160, June 28, 2005) were recently listed and Oregon Coastal coho (73 FR 7816, February 11, 2008) were recently relisted as threatened under the ESA. The 1999 biological opinion concluded that the bycatch of salmonids in the Pacific whiting fishery were almost entirely Chinook salmon, with little or no bycatch of coho, chum, sockeye, and steelhead. The Southern Distinct Population Segment (DPS) of green sturgeon (71 FR 17757, April 7, 2006) were also recently listed as threatened under the ESA. As a consequence, NMFS has reinitiated its Section 7 consultation on the PFMC's Groundfish FMP.

Pursuant to Executive Order 13175, this proposed rule was developed after meaningful consultation and collaboration with tribal officials from the area covered by the FMP. Under the Magnuson-Stevens Act at 16 U.S.C. 1852(b)(5), one of the voting members of the Pacific Council must be a representative of an Indian tribe with federally recognized fishing rights from the area of the Council's jurisdiction. In addition, regulations implementing the

FMP establish a procedure by which the tribes with treaty fishing rights in the area covered by the FMP request new allocations or regulations specific to the tribes, in writing, before the first of the two meetings at which the Council considers groundfish management measures. The regulations at 50 CFR 660.324(d) further state ''the Secretary will develop tribal allocations and regulations under this paragraph in consultation with the affected tribe(s) and, insofar as possible, with tribal consensus.'' The tribal management measures in this proposed rule have been developed following these procedures. The tribal representative on the Council made a motion to adopt the non-whiting tribal management measures, which was passed by the Council. Those management measures, which were developed and proposed by the tribes, are included in this proposed rule. The tribal whiting set aside was based on the requests from the affected tribes at the June meeting.

List of Subjects in 50 CFR Part 660

Fishing, Fisheries, and Indian Fisheries.

Dated: December 9, 2008.

Samuel D. Rauch III,

Deputy Assistant Administrator for Regulatory Programs, National Marine Fisheries Service.

For the reasons set out in the preamble, 50 CFR part 660 is proposed to be amended as follows:

PART 660—FISHERIES OFF WEST COAST STATES

1. The authority citation for part 660 continues to read as follows:

Authority: 16 U.S.C. 1801 *et seq.*

2. In § 660.302, paragraph (2)(x) of the definition for ''North-South management area'', and the definition for the introductory text of ''Processing or to process'' and the definition for ''Prohibited species'' are revised to read as follows:

§ 660.302 Definitions.

* * * * *

North-South management area * * *

(2) * * *

(x) Cape Arago, OR—43°20.83′ N. lat.

* * * * *

Processing or to process means the preparation or packaging of groundfish to render it suitable for human consumption, retail sale, industrial uses or long-term storage, including, but not limited to, cooking, canning, smoking, salting, drying, filleting, freezing, or rendering into meal or oil, but does not mean heading and gutting unless additional preparation is done. (Also see an exception to certain requirements at § 660.373(a)(iii) pertaining to Pacific whiting shoreside vessels 75-ft (23-m) or less LOA that, in addition to heading and gutting, remove the tails and freeze catch at sea.)

* * * * *

Prohibited species means those species and species groups whose retention is prohibited unless authorized by provisions of this section or other applicable law. The following are prohibited species: Any species of salmonid, Pacific halibut, Dungeness crab caught seaward of Washington or Oregon, and groundfish species or species groups under the PCGFMP for which quotas have been achieved and/or the fishery closed.

3. In § 660.303, paragraph (c) is revised to read as follows:

§ 660.303 Reporting and recordkeeping.

* * * * *

(c) Any person landing groundfish must retain on board the vessel from which groundfish is landed, and provide to an authorized officer upon request, copies of any and all reports of groundfish landings containing all data, and in the exact manner, required by the applicable state law throughout the cumulative limit period during which a landing occurred and for 15 days thereafter. For participants in the primary sablefish season (detailed at § 660.372(b)), the cumulative limit period to which this requirement applies is April 1 through October 31 or, for an individual permit holder, when that permit holder's tier limit is attained, whichever is earlier.

* * * * *

4. In § 660.306, a new paragraph (f)(7) is added to read as follows:

§ 660.306 Prohibitions.

* * * * *

(f) * * *

(7) Sort or discard any portion of the catch taken by a catcher vessel in the mothership sector prior to the catch being received on a mothership, and prior to the observer being provided access to the unsorted catch, with the exception of minor amounts of catch that are lost when the codend is separated from the net and prepared for transfer.

* * * * *

5. In § 660.314, paragraphs (c)(1), (d)(3)(iii) introductory text, (d)(3)(iii)(B), and (e) introductory text are revised to read as follows:

§ 660.314 Groundfish observer program.

(c) * * *

(1) NMFS-certified observers.

(i) A catcher/processor or mothership 125-ft (38.1-m) LOA or longer must carry two NMFS-certified observers, and a catcher-processor or mothership shorter than 125-ft (38.1-m) LOA must carry one NMFS-certified observer, each day that the vessel is used to take, retain, receive, land, process, or transport groundfish.

(ii) A Pacific whiting shoreside vessel that sorts catch at sea must carry one NMFS-certified observer, from the time the vessel leaves port on a trip in which the catch is sorted at sea to the time that all catch from that trip has been offloaded.

* * * * *

(d) * * *

(3) * * *

(iii) *Hardware and software.* Pacific whiting vessels that are required to carry one or more NMFS-certified observers under provisions at paragraphs (c)(1)(i) and (ii) of this section must provide hardware and software pursuant to regulations at 50 CFR 679.50(f)(1)(iii)(B)(1) and 50 CFR 679.50(f)(2), as follows:

* * * * *

(B) *NMFS-supplied software.* Ensuring that each vessel that is required to carry a NMFS-certified observer obtains the data entry software provided by the NMFS for use by the observer.

* * * * *

(e) *Procurement of observer services by catcher/processors, motherships, and Pacific whiting shoreside vessels that sort at sea.* Owners of vessels required to carry observers under provisions at paragraph (c)(1)(i) or (ii) of this section must arrange for observer services from an observer provider permitted by the North Pacific Groundfish Observer Program under 50 CFR 679.50(i), except that:

* * * * *

6. In § 660.365, paragraphs (b), (c), (d), and (g) are revised to read as follows:

§ 660.365 Overfished species rebuilding plans.

* * * * *

(b) *Canary rockfish.* The target year for rebuilding the canary rockfish stock to BMSY is 2021. The harvest control rule to be used to rebuild the canary rockfish stock is an annual SPR harvest rate of 88.7 percent.

(c) *Cowcod.* The target year for rebuilding the cowcod stock south of Point Conception to BMSY is 2072. The harvest control rule to be used to rebuild the cowcod stock is an annual SPR harvest rate of 82.1 percent.

(d) *Darkblotched rockfish.* The target year for rebuilding the darkblotched rockfish stock to BMSY is 2028. The

harvest control rule to be used to rebuild the darkblotched rockfish stock is an annual SPR harvest rate of 62.1 percent.

* * * * *

(g) *Yelloweye rockfish.* The target year for rebuilding the yelloweye rockfish stock to BMSY is 2084. The harvest control rule to be used to rebuild the yelloweye rockfish stock is an annual SPR harvest rate of 66.3 percent in 2009 and in 2010. Yelloweye rockfish is subject to a ramp-down strategy where the harvest level has been reduced annually from 2007 through 2009. Yelloweye rockfish will remain at the 2009 level in 2010. Beginning in 2011, yelloweye rockfish will be subject to a constant harvest rate strategy with a constant SPR harvest rate of 71.9 percent.

7. In § 660.370 paragraphs (c)(1)(ii), (d), (h)(6)(i)(A) through (C), and (h)(6)(ii)(A) and (B) are revised to read as follows:

§ 660.370 Specifications and management measures.

* * * * *

(c) * * *

(1) * * *

(ii) *Differential trip landing limits and frequency limits based on gear type, closed seasons, and bycatch limits.* Trip landing and frequency limits that differ by gear type and closed seasons may be imposed or adjusted on a biennial or more frequent basis for the purpose of rebuilding and protecting overfished or depleted stocks. To achieve the rebuilding of an overfished or depleted stock, bycatch limits may be established and adjusted to be used to close the primary season for any sector of the Pacific whiting fishery described at § 660.373(b), before the sector's Pacific whiting allocation is achieved if the applicable bycatch limit is reached. Bycatch limit amounts are specified at § 660.373(b)(4).

* * * * *

(d) *Automatic actions.* Automatic management actions may be initiated by the NMFS Regional Administrator without prior public notice, opportunity to comment, or a Council meeting. These actions are nondiscretionary, and the impacts must have been taken into account prior to the action. Unless otherwise stated, a single notice will be published in the **Federal Register** making the action effective if good cause exists under the APA to waive notice and comment.

(1) Automatic actions are used in the Pacific whiting fishery to:

(i) Close sectors of the fishery or to reinstate trip limits in the shore-based fishery when a whiting harvest guideline, commercial harvest guideline, or a sector's allocation is reached, or is projected to be reached;

(ii) Close all sectors or a single sector of the fishery when a bycatch limit is reached or projected to be reached;

(iii) Reapportion unused Pacific whiting allocation to other sectors of the fishery;

(iv) Reapportion unused bycatch limit species to other sectors of the Pacific whiting fishery.

(V) Implement the Ocean Salmon Conservation Zone, described at § 660.373(c)(3), when NMFS projects the Pacific whiting fishery may take in excess of 11,000 Chinook within a calendar year,

(vi) Implement Pacific Whiting Bycatch Reduction Areas, described at § 660.373(c)(3), when NMFS projects a sector-specific bycatch limit will be reached before the sector's whiting allocation.

(2) [Reserved]

* * * * *

(h) * * *

(6) * * *

(i) * * *

(A) Coastwide—widow rockfish, canary rockfish, darkblotched rockfish, yelloweye rockfish, shortbelly rockfish, black rockfish, blue rockfish, minor nearshore rockfish, minor shelf rockfish, minor slope rockfish, shortspine and longspine thornyhead, Dover sole, arrowtooth flounder, petrale sole, starry flounder, English sole, other flatfish, lingcod, sablefish, Pacific cod, spiny dogfish, other fish, longnose skate, and Pacific whiting;

(B) North of 40°10′ N. lat.—POP, yellowtail rockfish;

(C) South of 40°10′ N. lat.—minor shallow nearshore rockfish, minor deeper nearshore rockfish, California scorpionfish, chilipepper rockfish, bocaccio rockfish, splitnose rockfish, Pacific sanddabs, cowcod and cabezon.

(ii) * * *

(A) Coastwide—widow rockfish, canary rockfish, darkblotched rockfish, yelloweye rockfish, shortbelly rockfish, black rockfish, blue rockfish, minor nearshore rockfish, minor shelf rockfish, minor slope rockfish, shortspine and longspine thornyhead, Dover sole, arrowtooth flounder, petrale sole, starry flounder, English sole, other flatfish, lingcod, sablefish, Pacific cod, spiny dogfish, longnose skate, other fish, Pacific whiting, and Pacific sanddabs;

(B) North of 40°10′ N. lat.—POP, yellowtail rockfish;

* * * * *

8. In § 660.372, paragraph (b)(1) is revised to read as follows:

§ 660.372 Fixed gear sablefish fishery management.

* * * * *

(b) * * *

(1) *Season dates.* North of 36° N. lat., the primary sablefish season for the limited entry, fixed gear, sablefish-endorsed vessels begins at 12 noon l.t. on April 1 and ends at 12 noon l.t. on October 31, or for an individual permit holder when that permit holder's tier limit has been reached, whichever is earlier, unless otherwise announced by the Regional Administrator through the routine management measures process described at § 660.370(c).

* * * * *

9. In § 660.373, paragraphs (a), (b)(3)(ii), and (b)(4) are revised, and new paragraph (c)(4) is added to read as follows:

§ 660.373 Pacific whiting (whiting) fishery management.

(a) *Sectors.*

(1) The catcher/processor sector is composed of catcher/processors, which are vessels that harvest and process whiting during a calendar year.

(2) The mothership sector is composed of motherships and catcher vessels that harvest whiting for delivery to motherships. Motherships are vessels that process, but do not harvest, whiting during a calendar year.

(3) The shore-based sector is composed of vessels that harvest whiting for delivery to Pacific whiting shoreside first receivers. Notwithstanding the other provisions of 50 CFR Part 660, Subpart G, a vessel that is 75 feet or less LOA that harvests whiting and, in addition to heading and gutting, cuts the tail off and freezes the whiting, is not considered to be a catcher/processor nor is it considered to be processing fish. Such a vessel is considered a participant in the shore-based whiting sector, and is subject to regulations and allocations for that sector.

(b) * * *

(3) * * *

(ii) If, during a primary whiting season, a whiting vessel harvests a groundfish species other than whiting for which there is a midwater trip limit, then that vessel may also harvest up to another footrope-specific limit for that species during any cumulative limit period that overlaps the start or end of the primary whiting season.

(4) *Bycatch limits in the whiting fishery.* The bycatch limits for the whiting fishery may be established, adjusted, and used inseason to close a sector or sectors of the whiting fishery to achieve the rebuilding of an overfished or depleted stock. These

limits are routine management measures under § 660.370(c) and, as such, may be adjusted inseason or may have new species added to the list of those with bycatch limits. Closure of a sector or sectors when a bycatch limit is projected to be reached is an automatic action under § 660.370(d).

(i) The whiting fishery bycatch limit is apportioned among the sectors identified in paragraph (a) of this section based on the same percentages used to allocate whiting among the sectors, established in § 660.323(a). The sector specific bycatch limits are: For catcher/processors 6.1 mt of canary rockfish, 153.0 mt of widow rockfish, and 8.5 mt of darkblotched rockfish; for motherships 4.3 mt of canary rockfish, 108.0 mt of widow rockfish, and 6.0 mt of darkblotched rockfish; and for shore-based 7.6 mt of canary rockfish, 189.0 mt of widow rockfish, and 10.5 mt of darkblotched rockfish.

(ii) The Regional Administrator may make available for harvest to the other sectors of the whiting fishery identified in § 660.323, the amounts of a sector's bycatch limit species remaining when a sector is closed because its whiting allocation or a bycatch limit has been reached or is projected to be reached. The remaining bycatch limit species shall be redistributed in proportion to each sector's initial whiting allocation. When considering redistribution of bycatch limits between the sectors of the whiting fishery, the Regional Administrator will take into consideration the best available data on total projected fishing impacts on the bycatch limit species, as well as impacts on other groundfish species.

(iii) If a bycatch limit is reached or is projected to be reached, the following action applicable to the sector may be taken.

(A) Catcher/processor sector. Further taking and retaining, receiving, or at-sea processing of whiting by a catcher/processor is prohibited. No additional unprocessed whiting may be brought on board after at-sea processing is prohibited, but a catcher/processor may continue to process whiting that was on board before at-sea processing was prohibited.

(B) Mothership sector. Further receiving or at-sea processing of whiting by a mothership is prohibited. No additional unprocessed whiting may be brought on board after at-sea processing is prohibited, but a mothership may continue to process whiting that was on board before at-sea processing was prohibited. Whiting may not be taken and retained, possessed, or landed by a catcher vessel participating in the mothership sector.

(C) Shore-based sector. Whiting may not be taken and retained, possessed, or landed by a catcher vessel participating in the shore-based sector except as authorized under a trip limit specified under § 660.370(c).

(iv) The Regional Administrator will announce in the **Federal Register** when a bycatch limit is reached, or is projected to be reached, specifying the action being taken as specified under paragraph (b)(4) of this section. The Regional Administrator will announce in the **Federal Register** any reapportionment of bycatch limit species. In order to prevent exceeding the bycatch limits or to avoid underutilizing the Pacific whiting resource, prohibitions against further taking and retaining, receiving, or at-sea processing of whiting, or reapportionment of bycatch limits species may be made effective immediately by actual notice to fishers and processors, by e-mail, Internet (*http://www.nwr.noaa.gov/Groundfish-Halibut/Groundfish-Fishery-Management/Whiting-Management/index.cfm*), phone, fax, letter, press release, and/or USCG Notice to Mariners (monitor channel 16 VHF), followed by publication in the **Federal Register**.

(c) * * *

(4) *Pacific Whiting Bycatch Reduction Areas.* Vessels using limited entry midwater trawl gear during the primary whiting season may be prohibited from fishing shoreward of a boundary line approximating the 75-fm (137-m), 100-fm (183-m) or 150-fm (274-m) depth contours. Latitude and longitude coordinates for the boundary lines approximating the depth contours are provided at § 660.393(a). Closures may be implemented inseason for a sector(s) through automatic action, defined at 660.370(d), when NMFS projects that a sector will exceed a bycatch limit specified for that sector before the sector's whiting allocation is projected to be reached.

* * * * *

10. In § 660.381, paragraphs (c) introductory text and (d) introductory text are revised to read as follows:

§ 660.381 Limited entry trawl fishery management measures.

* * * * *

(c) *Cumulative trip limits and prohibitions by limited entry trawl gear type.* Management measures may vary depending on the type of trawl gear (*i.e.*, large footrope, small footrope, selective flatfish, or midwater trawl gear) used and/or on board a vessel during a fishing trip, cumulative limit period, and the area fished. Trawl nets may be used on and off the seabed. For some species or species groups, Table 3 (North) and Table 3 (South) provide cumulative and/or trip limits that are specific to different types of trawl gear: large footrope, small footrope (including selective flatfish), selective flatfish, midwater, and multiple types. If Table 3 (North) and Table 3 (South) provide gear specific limits for a particular species or species group, it is unlawful to take and retain, possess or land that species or species group with limited entry trawl gears other than those listed.

* * * * *

(d) *Groundfish Conservation Areas (GCAs) applicable to trawl vessels.* A GCA, a type of closed area, is a geographic area defined by coordinates expressed in degrees of latitude and longitude. The latitude and longitude coordinates of the GCA boundaries are specified at §§ 660.390 through 660.394. A vessel that is fishing within a GCA listed in this paragraph (d) with trawl gear authorized for use within a GCA may not have any other type of trawl gear on board the vessel. The following GCAs apply to vessels participating in the limited entry trawl fishery. Additional closed areas that specifically apply to the Pacific whiting fisheries are described at § 660.373(c).

* * * * *

11. In § 660.382 paragraphs (c)(4) through (8) are redesignated as (c)(10) through (14), and new paragraphs (c)(4) through (9) are added, to read as follows:

§ 660.382 Limited entry fixed gear fishery management measures.

* * * * *

(c) * * *

(4) *Westport Offshore Recreational YRCA.* The latitude and longitude coordinates that define the Westport Offshore Recreational YRCA boundaries are specified at § 660.390. The Westport Offshore Recreational YRCA is designated as an area to be avoided (a voluntary closure) by commercial fixed gear fishers.

(5) *Point St. George YRCA.* The latitude and longitude coordinates of the Point St. George YRCA boundaries are specified at § 660.390. Fishing with limited entry fixed gear is prohibited within the Point St. George YRCA, on dates when the closure is in effect. It is unlawful to take and retain, possess, or land groundfish taken with limited entry fixed gear within the Point St. George YRCA, on dates when the closure is in effect. The closure is not in effect at this time, and commercial fishing for groundfish is open within the Point St. George YRCA from January 1 through December 31. This closure may be imposed through inseason

adjustment. Limited entry fixed gear vessels may transit through the Point St. George YRCA, at any time, with or without groundfish on board.

(6) *South Reef YRCA.* The latitude and longitude coordinates of the South Reef YRCA boundaries are specified at § 660.390. Fishing with limited entry fixed gear is prohibited within the South Reef YRCA, on dates when the closure is in effect. It is unlawful to take and retain, possess, or land groundfish taken with limited entry fixed gear within the South Reef YRCA, on dates when the closure is in effect. The closure is not in effect at this time, and commercial fishing for groundfish is open within the South Reef YRCA from January 1 through December 31. This closure may be imposed through inseason adjustment. Limited entry fixed gear vessels may transit through the South Reef YRCA, at any time, with or without groundfish on board.

(7) *Reading Rock YRCA.* The latitude and longitude coordinates of the Reading Rock YRCA boundaries are specified at § 660.390. Fishing with limited entry fixed gear is prohibited within the Reading Rock YRCA, on dates when the closure is in effect. It is unlawful to take and retain, possess, or land groundfish taken with limited entry fixed gear within the Reading Rock YRCA, on dates when the closure is in effect. The closure is not in effect at this time, and commercial fishing for groundfish is open within the Reading Rock YRCA from January 1 through December 31. This closure may be imposed through inseason adjustment. Limited entry fixed gear vessels may transit through the Reading Rock YRCA, at any time, with or without groundfish on board.

(8) *Point Delgada (North) YRCA.* The latitude and longitude coordinates of the Point Delgada (North) YRCA boundaries are specified at § 660.390. Fishing with limited entry fixed gear is prohibited within the Point Delgada (North) YRCA, on dates when the closure is in effect. It is unlawful to take and retain, possess, or land groundfish taken with limited entry fixed gear within the Point Delgada (North) YRCA, on dates when the closure is in effect. The closure is not in effect at this time, and commercial fishing for groundfish is open within the Point Delgada (North) YRCA from January 1 through December 31. This closure may be imposed through inseason adjustment. Limited entry fixed gear vessels may transit through the Point Delgada (North) YRCA, at any time, with or without groundfish on board.

(9) *Point Delgada (South) YRCA.* The latitude and longitude coordinates of the Point Delgada (South) YRCA boundaries are specified at § 660.390. Fishing with limited entry fixed gear is prohibited within the Point Delgada (South) YRCA, on dates when the closure is in effect. It is unlawful to take and retain, possess, or land groundfish taken with limited entry fixed gear within the Point Delgada (South) YRCA, on dates when the closure is in effect. The closure is not in effect at this time, and commercial fishing for groundfish is open within the Point Delgada (South) YRCA from January 1 through December 31. This closure may be imposed through inseason adjustment. Limited entry fixed gear vessels may transit through the Point Delgada (South) YRCA, at any time, with or without groundfish on board.

* * * * *

12. In § 660.383 paragraph (c)(4) through (10) are redesignated as (c)(10) through (16), and new paragraphs (c)(4) through (9) are added, to read as follows:

§ 660.383 Open access fishery management measures.

* * * * *

(c) * * *

(4) *Westport Offshore Recreational YRCA.* The latitude and longitude coordinates that define the Westport Offshore Recreational YRCA boundaries are specified at § 660.390. The Westport Offshore Recreational YRCA is designated as an area to be avoided (a voluntary closure) by commercial fixed gear fishers.

(5) *Point St. George YRCA.* The latitude and longitude coordinates of the Point St. George YRCA boundaries are specified at § 660.390. Fishing with open access gear is prohibited within the Point St. George YRCA, on dates when the closure is in effect. It is unlawful to take and retain, possess, or land groundfish taken with open access gear within the Point St. George YRCA, on dates when the closure is in effect. The closure is not in effect at this time, and commercial fishing for groundfish is open within the Point St. George YRCA from January 1 through December 31. This closure may be imposed through inseason adjustment. Open access vessels may transit through the Point St. George YRCA, at any time, with or without groundfish on board.

(6) *South Reef YRCA.* The latitude and longitude coordinates of the South Reef YRCA boundaries are specified at § 660.390. Fishing with open access gear is prohibited within the South Reef YRCA, on dates when the closure is in effect. It is unlawful to take and retain, possess, or land groundfish taken with open access gear within the South Reef YRCA, on dates when the closure is in effect. The closure is not in effect at this time, and commercial fishing for groundfish is open within the South Reef YRCA from January 1 through December 31. This closure may be imposed through inseason adjustment. Open access vessels may transit through the South Reef YRCA, at any time, with or without groundfish on board.

(7) *Reading Rock YRCA.* The latitude and longitude coordinates of the Reading Rock YRCA boundaries are specified at § 660.390. Fishing with open access gear is prohibited within the Reading Rock YRCA, on dates when the closure is in effect. It is unlawful to take and retain, possess, or land groundfish taken with open access gear within the Reading Rock YRCA, on dates when the closure is in effect. The closure is not in effect at this time, and commercial fishing for groundfish is open within the Reading Rock YRCA from January 1 through December 31. This closure may be imposed through inseason adjustment. Open access vessels may transit through the Reading Rock YRCA, at any time, with or without groundfish on board.

(8) *Point Delgada (North) YRCA.* The latitude and longitude coordinates of the Point Delgada (North) YRCA boundaries are specified at § 660.390. Fishing with open access gear is prohibited within the Point Delgada (North) YRCA, on dates when the closure is in effect. It is unlawful to take and retain, possess, or land groundfish taken with open access gear within the Point Delgada (North) YRCA, on dates when the closure is in effect. The closure is not in effect at this time, and commercial fishing for groundfish is open within the Point Delgada (North) YRCA from January 1 through December 31. This closure may be imposed through inseason adjustment. Open access vessels may transit through the Point Delgada (North) YRCA, at any time, with or without groundfish on board.

(9) *Point Delgada (South) YRCA.* The latitude and longitude coordinates of the Point Delgada (South) YRCA boundaries are specified at § 660.390. Fishing with open access gear is prohibited within the Point Delgada (South) YRCA, on dates when the closure is in effect. It is unlawful to take and retain, possess, or land groundfish taken with open access gear within the Point Delgada (South) YRCA, on dates when the closure is in effect. The closure is not in effect at this time, and commercial fishing for groundfish is open within the Point Delgada (South) YRCA from January 1 through December 31. This closure may be imposed

through inseason adjustment. Open access vessels may transit through the Point Delgada (South) YRCA, at any time, with or without groundfish on board.

* * * * *

13. In § 660.384,

a. Redesignate paragraphs (c)(1)(i)(C) as (c)(1)(i)(D), and (c)(3)(i)(E) as (c)(3)(i)(J);

b. Revise newly redesignated paragraphs (c)(1)(i)(D)(*1*) and (*2*);

c. Revise paragraphs (c)(1)(iii)(A), (c)(1)(iii)(B), (c)(2)(iii), (c)(3)(i)(A)(*1*) through (*4*), (c)(3)(ii)(A)(*1*) through (*4*), (c)(3)(ii)(B), (c)(3)(iii)(A)(*1*) through (*4*), (c)(3)(iv), (c)(3)(v)(A)(*2*) and (c)(3)(v)(A)(*3*);

d. Add paragraphs (c)(1)(i)(C), (c)(3)(i)(A)(*5*), (c)(3)(i)(A)(*6*), (c)(3)(i)(E) through (I), (c)(3)(ii)(A)(*5*), (c)(3)(ii)(A)(*6*), (c)(3)(iii)(A)(5), (c)(3)(iii)(A)(*6*) and (c)(3)(v)(A)(*4*); to read as follows:

§ 660.384 Recreational fishery management measures.

* * * * *

(c) * * *

(1) * * *

(i) * * *

(C) *Westport Offshore Recreational Yelloweye Rockfish Conservation Area.* Recreational fishing for groundfish and halibut is prohibited within the Westport Offshore Recreational YRCA. It is unlawful for recreational fishing vessels to take and retain, possess, or land groundfish taken with recreational gear within the Westport Offshore Recreational YRCA. A vessel fishing in the Westport Offshore Recreational YRCA may not be in possession of any groundfish. Recreational vessels may transit through the Westport Offshore Recreational YRCA with or without groundfish on board. The Westport Offshore Recreational YRCA is defined by latitude and longitude coordinates specified at § 660.390.

(D) * * *

(*1*) Between the U.S. border with Canada and the Queets River, recreational fishing for groundfish is prohibited seaward of a boundary line approximating the 20-fm (37-m) depth contour from May 21 through September 30, except on days when the Pacific halibut fishery is open in this area. Days open to Pacific halibut recreational fishing off Washington are announced on the NMFS hotline at (206) 526–6667 or (800) 662–9825. Coordinates for the boundary line approximating the 20-fm (37-m) depth contour are listed in § 660.391.

(*2*) Between the Queets River and Leadbetter Point, recreational fishing for groundfish is prohibited seaward of a boundary line approximating the 30-fm (55-m) depth contour from March 15 through June 15, except that recreational fishing for sablefish and Pacific cod is permitted within the recreational RCA from May 1 through June 15. Retention of lingcod seaward of the boundary line approximating the 30-fm (55-m) depth contour south of 46°58′ N. lat. is prohibited on Fridays and Saturdays from July 1 through August 31. For additional regulations regarding the Washington recreational lingcod fishery, see paragraph (c)(1)(iii) of this section. Coordinates for the boundary line approximating the 30-fm (55-m) depth contour are listed in § 660.391.

(iii) * * *

(A) Between the U.S./Canada border to 48°10′ N. lat. (Cape Alava) (Washington Marine Area 4), recreational fishing for lingcod is open, for 2009, from April 16 through October 15, and for 2010, from April 16 through October 15.

(B) Between 48°10′ N. lat. (Cape Alava) and 46°16′ N. lat. (Washington/Oregon border) (Washington Marine Areas 1–3), recreational fishing for lingcod is open for 2009, from March 14 through October 17, and for 2010, from March 13 through October 16.

(2) * * *

(iii) *Bag limits, size limits.* The bag limits for each person engaged in recreational fishing in the EEZ seaward of Oregon are three lingcod per day, which may be no smaller than 22 in (56 cm) total length; and 10 marine fish per day, which excludes Pacific halibut, salmonids, tuna, perch species, sturgeon, sanddabs, flatfish, lingcod, striped bass, hybrid bass, offshore pelagic species and baitfish (herring, smelt, anchovies and sardines), but which includes rockfish, greenling, cabezon and other groundfish species. The bag limit for all flatfish is 25 fish per day, which excludes Pacific halibut, but which includes all soles, flounders and Pacific sanddabs. In the Pacific halibut fisheries, retention of groundfish is governed in part by annual management measures for Pacific halibut fisheries, which are published in the **Federal Register**. Between the Oregon border with Washington and Cape Falcon, when Pacific halibut are onboard the vessel, groundfish may not be taken and retained, possessed or landed, except sablefish and Pacific cod. Between Cape Falcon and Humbug Mountain, during days open to the Oregon Central Coast ''all-depth'' sport halibut fishery, when Pacific halibut are onboard the vessel, no groundfish may be taken and retained, possessed or landed, except sablefish and Pacific cod. ''All-depth'' season days are established in the annual management measures for Pacific halibut fisheries, which are published in the **Federal Register** and are announced on the NMFS halibut hotline, 1–800–662–9825. The minimum size limit for cabezon retained in the recreational fishery is 16-in (41-cm), and for greenling is 10-in (26-cm). Taking and retaining canary rockfish and yelloweye rockfish is prohibited at all times and in all areas.

(3) * * *

(i) * * *

(A) * * *

(*1*) Between 42° N. lat. (California/Oregon border) and 40°10.00′ N. lat. (North Region), recreational fishing for all groundfish (except ''other flatfish'' as specified in paragraph (c)(3)(iv) of this section) is prohibited seaward of the 20-fm (37-m) depth contour along the mainland coast and along islands and offshore seamounts from May 15 through September 15; and is closed entirely from January 1 through May 14 and from September 16 through December 31 (*i.e.*, prohibited seaward of the shoreline).

(*2*) Between 40°10′ N. lat. and 38°57′ N. lat. (North-Central North of Point Arena Region), recreational fishing for all groundfish (except ''other flatfish'' as specified in paragraph (c)(3)(iv) of this section) is prohibited seaward of the 20-fm (37-m) depth contour along the mainland coast and along islands and offshore seamounts from May 15 through August 15; and is closed entirely from January 1 through May 14 and from August 16 through December 31 (*i.e.*, prohibited seaward of the shoreline). Closures around the Farallon Islands (see paragraph (c)(3)(i)(C) of this section) and Cordell Banks (see paragraph (c)(3)(i)(D) of this section) also apply in this area.

(*3*) Between 38°57′ N. lat. and 37°11′ N. lat. (North-Central South of Point Arena Region), recreational fishing for all groundfish (except ''other flatfish'' as specified in paragraph (c)(3)(iv) of this section) is prohibited seaward of the boundary line approximating the 30-fm (55-m) depth contour along the mainland coast and along islands and offshore seamounts from June 13 through October 31; and is closed entirely from January 1 through June 12 and from November 1 through December 31 (*i.e.*, prohibited seaward of the shoreline). Closures around the Farallon Islands (see paragraph (c)(3)(i)(C) of this section) and Cordell Banks (see paragraph (c)(3)(i)(D) of this section) also apply in this area. Coordinates for the boundary line approximating the 30-fm (55-m) depth contour are listed in § 660.391.

(*4*) Between 37°11′ N. lat. and 36° N. lat. (Monterey South-Central Region), recreational fishing for all groundfish (except ''other flatfish'' as specified in paragraph (c)(3)(iv) of this section) is prohibited seaward of a boundary line approximating the 40-fm (73-m) depth contour along the mainland coast and along islands and offshore seamounts from May 1 through November 15; and is closed entirely from January 1 through April 30 and from November 16 through December 31 (*i.e.*, prohibited seaward of the shoreline). Coordinates for the boundary line approximating the 40-fm (73-m) depth contour are specified in § 660.391.

(*5*) Between 36° N. lat. and 34°27′ N. lat. (Morro Bay South-Central Region), recreational fishing for all groundfish (except ''other flatfish'' as specified in paragraph (c)(3)(iv) of this section) is prohibited seaward of a boundary line approximating the 40-fm (73-m) depth contour along the mainland coast and along islands and offshore seamounts from May 1 through November 15; and is closed entirely from January 1 through April 30 and from November 16 through December 31 (*i.e.*, prohibited seaward of the shoreline). Coordinates for the boundary line approximating the 40-fm (73-m) depth contour are specified in § 660.391.

(*6*) South of 34°27′ N. latitude (South Region), recreational fishing for all groundfish (except California scorpionfish as specified below in this paragraph and in paragraph (v) and ''other flatfish'' as specified in paragraph (c)(3)(iv) of this section) is prohibited seaward of a boundary line approximating the 60-fm (110-m) depth contour from March 1 through December 31 along the mainland coast and along islands and offshore seamounts, except in the CCAs where fishing is prohibited seaward of the 20-fm (37-m) depth contour when the fishing season is open (see paragraph (c)(3)(i)(B) of this section). Recreational fishing for all groundfish (except California scorpionfish and ''other flatfish'') is closed entirely from January 1 through February 28 (*i.e.*, prohibited seaward of the shoreline). Recreational fishing for California scorpionfish south of 34°27′ N. lat. is prohibited seaward of a boundary line approximating the 40-fm (73-m) depth contour from January 1 through February 28, and seaward of the 60-fm (110-m) depth contour from March 1 through December 31, except in the CCAs where fishing is prohibited seaward of the 20-fm (37-m) depth contour when the fishing season is open. Coordinates for the boundary line approximating the 40-fm (73-m) and 60-fm (110-m) depth contours are specified in §§ 660.391 and 660.392.

* * * * *

(E) *Point St. George Yelloweye Rockfish Conservation Area (YRCA).* Recreational fishing for groundfish is prohibited within the Point St. George YRCA, as defined by latitude and longitude coordinates at § 660.390, on dates when the closure is in effect. The closure is not in effect at this time, and recreational fishing for groundfish is open within the Point St. George YRCA from January 1 through December 31. This closure may be imposed through inseason adjustment.

(F) *South Reef YRCA.* Recreational fishing for groundfish is prohibited within the South Reef YRCA, as defined by latitude and longitude coordinates at § 660.390, on dates when the closure is in effect. The closure is not in effect at this time, and recreational fishing for groundfish is open within the South Reef YRCA from January 1 through December 31. This closure may be imposed through inseason adjustment.

(G) *Reading Rock YRCA.* Recreational fishing for groundfish is prohibited within the Reading Rock YRCA, as defined by latitude and longitude coordinates at § 660.390, on dates when the closure is in effect. The closure is not in effect at this time, and recreational fishing for groundfish is open within the Reading Rock YRCA from January 1 through December 31. This closure may be imposed through inseason adjustment.

(H) *Point Delgada (North) YRCA.* Recreational fishing for groundfish is prohibited within the Point Delgada (North) YRCA, as defined by latitude and longitude coordinates at § 660.390, on dates when the closure is in effect. The closure is not in effect at this time, and recreational fishing for groundfish is open within the Point Delgada (North) YRCA from January 1 through December 31. This closure may be imposed through inseason adjustment.

(I) *Point Delgada (South) YRCA.* Recreational fishing for groundfish is prohibited within the Point Delgada (South) YRCA, as defined by latitude and longitude coordinates at § 660.390, on dates when the closure is in effect. The closure is not in effect at this time, and recreational fishing for groundfish is open within the Point Delgada (South) YRCA from January 1 through December 31. This closure may be imposed through inseason adjustment.

(J) * * *

(ii) * * *

(A) * * *

(*1*) Between 42° N. lat. (California/Oregon border) and 40°10′ N. lat. (North Region), recreational fishing for the RCG complex is open from May 15 through September 15 (*i.e.*, it's closed from January 1 through May 14 and from September 16 through December 31).

(*2*) Between 40°10′ N. lat. and 38°57′ N. lat. (North Central North of Point Arena Region), recreational fishing for the RCG Complex is open from May 15 through August 15 (*i.e.*, it's closed from January 1 through May 14 and May 16 through December 31).

(*3*) Between 38°57′ N. lat. and 37°11′ N. lat. (North Central South of Point Arena Region), recreational fishing for the RCG Complex is open from June 13 through October 31 (*i.e.*, it's closed from January 1 through June 12 and November 1 through December 31.

(*4*) Between 37°11′ N. lat. and 36° N. lat. (Monterey South-Central Region), recreational fishing for the RCG Complex is open from May 1 through November 15 (*i.e.*, it's closed from January 1 through April 30 and from November 16 through December 31).

(*5*) Between 36′ N. lat. and 34°27′ N. lat. (Morro Bay South-Central Region), recreational fishing for the RCG Complex is open from May 1 through November 15 (*i.e.*, it's closed from January 1 through April 30 and from November 16 through December 31).

(*6*) South of 34°27′ N. latitude (South Region), recreational fishing for the RCG Complex is open from March 1 through December 31 (*i.e.*, it's closed from January 1 through February 28.

(B) *Bag limits, hook limits.* In times and areas when the recreational season for the RCG Complex is open, there is a limit of 2 hooks and 1 line when fishing for rockfish. The bag limit is 10 RCG Complex fish per day coastwide. Retention of canary rockfish, yelloweye rockfish and cowcod is prohibited. North of 40°10′ N. lat., within the 10 RCG Complex fish per day limit, no more than 2 may be bocaccio, no more than 2 may be greenling (kelp and/or other greenlings) and no more than 2 may be cabezon. South of 40°10′ N. lat., within the 10 RCG Complex fish per day limit, no more than 2 may be bocaccio, no more than 2 may be greenling (kelp and/or other greenlings) and no more than 2 may be cabezon. Multi-day limits are authorized by a valid permit issued by California and must not exceed the daily limit multiplied by the number of days in the fishing trip.

* * * * *

(iii) * * *

(A) * * *

(*1*) Between 42° N. lat. (California/Oregon border) and 40°10.00′ N. lat. (North Region), recreational fishing for lingcod is open from May 15 through

September 15 (*i.e.*, it's closed from January 1 through May 14 and from September 16 through December 31).

(*2*) Between 40°10′ N. lat. and 38°57′ N. lat. (North Central North of Point Arena Region), recreational fishing for lingcod is open from May 15 through August 15 (*i.e.*, it's closed from January 1 through May 14 and May 16 through December 31).

(*3*) Between 38°57′ N. lat. and 37°11′ N. lat. (North Central South of Point Arena Region), recreational fishing for lingcod is open from June 13 through October 31 (*i.e.*, it's closed from January 1 through June 12 and November 1 through December 31.

(*4*) Between 37°11′ N. lat. and 36° N. lat. (Monterey South-Central Region), recreational fishing for lingcod is open from May 1 through November 15 (*i.e.*, it's closed from January 1 through April 30 and from November 16 through December 31).

(*5*) Between 36′ N. lat. and 34°27′ N. lat. (Morro Bay South-Central Region), recreational fishing for lingcod is open from May 1 through November 15 (*i.e.*, it's closed from January 1 through April 30 and from November 16 through December 31).

(*6*) South of 34°27′ N. latitude (South Region), recreational fishing for lingcod is open from April 1 through November 30 (*i.e.*, it's closed from January 1 through March 31 and from December 1 through 31).

* * * * *

(iv) ''*Other flatfish*''. Coastwide off California, recreational fishing for ''other flatfish'' is permitted both shoreward of and within the closed areas described in paragraph (c)(3)(i) of this section. ''Other flatfish'' are defined at § 660.302 and include butter sole, curlfin sole, flathead sole, Pacific sanddab, rex sole, rock sole, and sand sole. Recreational fishing for ''other flatfish'' is permitted within the closed areas. ''Other flatfish,'' except Pacific sanddab, are subject to the overall 20-fish bag limit for all species of finfish, of which there may be no more than 10 fish of any one species. There is no season restriction or size limit for ''other flatfish;'' however, it is prohibited to filet ''other flatfish'' at sea. There is a limit of 2 hooks and 1 line when fishing for ''other flatfish''.

(v) * * *

(A) * * *

(*2*) Between 37°11′ N. lat. and 36° N. lat. (Monterey South Central Region), recreational fishing for California scorpionfish is open from May 1 through November 30 (*i.e.*, it's closed from January 1 through April 30 and from December 1 through December 31).

(*3*) Between 36° N. lat. and 34°27′ N. lat. (Morro Bay South Central Region), recreational fishing for California scorpionfish is open from May 1 through November 30 (*i.e.*, it's closed from January 1 through April 30 and from December 1 through December 31).

(*4*) South of 34°27′ N. lat. (South Region), recreational fishing for California scorpionfish is open from January 1 through December 31.

* * * * *

14. In § 660.385, paragraphs (a), (b)(1), (b)(2)(i)(A)(*1*), (b)(2)(i)(B)(*2*), (b)(2)(i)(B)(*3*), and (e) are revised to read as follows:

§ 660.385 Washington coastal tribal fisheries management measures.

* * * * *

(a) *Sablefish.* The tribal allocation is 694 mt per year. This allocation is, for each year, 10 percent of the Monterey through Vancouver area (North of 36° N. lat.) OY, less 1.6 percent estimated discard mortality.

(b) * * *

(1) *Black Rockfish.* For the commercial harvest of black rockfish off Washington State, a harvest guideline of: 20,000 lb (9,072 kg) north of Cape Alava, WA (48°10′ N. lat.) and 10,000 lb (4,536 kg) between Destruction Island, WA (47°40′ N. lat.) and Leadbetter Point, WA (46°38.17′ N. lat.). There are no tribal harvest restrictions for black rockfish in the area between Cape Alava and Destruction Island.

(2) * * *

(i) * * *

(A) * * *

(*1*) Small and large footrope trawl gear—17,000 lb (7,711-kg) per 2 months.

* * * * *

(B) * * *

(*2*) Selective flatfish trawl gear—5,000-lb (2,268-kg) per 2 months.

(*3*) Multiple bottom trawl gear—5,000-lb (2,268-kg) per 2 months.

* * * * *

(e) Pacific whiting. The tribal set-aside for 2009 is 50,000 mt, with 42,000 to be managed by the Makah Tribe and 8,000 mt to be managed by the Quileute Tribe.

* * * * *

15. In § 660.390, paragraphs (f) through (j) are redesignated as paragraphs (l) through (p), paragraph (e) is redesignated as paragraph (f), and new paragraphs (e), and (g) through (k) are added to read as follows:

§ 660.390 Groundfish conservation areas.

* * * * *

(e) *Westport Offshore Recreational YRCA.* The Westport Offshore Recreational YRCA is an area off the southern Washington coast intended to protect yelloweye rockfish. The Westport Recreational YRCA is defined by straight lines connecting the following specific latitude and longitude coordinates in the order listed:

(1) 46°54.30′ N. lat., 124°53.40′ W. long.;

(2) 46°54.30′ N. lat., 124°51.00′ W. long.;

(3) 46°53.30′ N. lat., 124°51.00′ W. long.;

(4) 46°53.30′ N. lat., 124°53.40′ W. long.; and connecting back to 46°54.30′ N. lat., 124°53.40′ W. long.

* * * * *

(g) *Point St. George YRCA.* The Point St. George YRCA is an area off the northern California coast, northwest of Point St. George, intended to protect yelloweye rockfish. The Point St. George YRCA is defined by straight lines connecting the following specific latitude and longitude coordinates in the order listed:

(1) 41°51.00′ N. lat., 124°23.75′ W. long.;

(2) 41°51.00′ N. lat., 124°20.75′ W. long.;

(3) 41°48.00′ N. lat., 124°20.75′ W. long.;

(4) 41°48.00′ N. lat., 124°23.75′ W. long.; and connecting back to 41°51.00′ N. lat., 124°23.75′ W. long.

(h) *South Reef YRCA.* The South Reef YRCA is an area off the northern California coast, southwest of Crescent City, intended to protect yelloweye rockfish. The South Reef YRCA is defined by straight lines connecting the following specific latitude and longitude coordinates in the order listed:

(1) 41°42.20′ N. lat., 124°16.00′ W. long.;

(2) 41°42.20′ N. lat., 124°13.80′ W. long.;

(3) 41°40.50′ N. lat., 124°13.80′ W. long.;

(4) 41°40.50′ N. lat., 124°16.00′ W. long.; and connecting back to 41°42.20′ N. lat., 124°16.00′ W. long.

(i) *Reading Rock YRCA.* The Reading Rock YRCA is an area off the northern California coast, between Crescent City and Eureka, intended to protect yelloweye rockfish. The Reading Rock YRCA is defined by straight lines connecting the following specific latitude and longitude coordinates in the order listed:

(1) 41°21.50′ N. lat., 124°12.00′ W. long.;

(2) 41°21.50′ N. lat., 124°10.00′ W. long.;

(3) 41°20.00′ N. lat., 124°10.00′ W. long.;

(4) 41°20.00′ N. lat., 124°12.00′ W. long.; and connecting back to 41°21.50′ N. lat., 124°12.00′ W. long.

(j) *Point Delgada YRCAs.* The Point Delgada YRCAs are two areas off the northern California coast, south of Point Delgada and Shelter Cove, intended to protect yelloweye rockfish. The Northern Point Delgada YRCA is defined by straight lines connecting the following specific latitude and longitude coordinates in the order listed:

(1) 39°59.00′ N. lat., 124°05.00′ W. long.;

(2) 39°59.00′ N. lat., 124°03.00′ W. long.;

(3) 39°57.00′ N. lat., 124°03.00′ W. long.;

(4) 39°57.00′ N. lat., 124°05.00′ W. long.; and connecting back to 39°59.00′ N. lat., 124°05.00′ W. long.

(k) *Southern Point Delgada YRCA.* The Southern Point Delgada YRCA is defined by straight lines connecting the following specific latitude and longitude coordinates in the order listed:

(1) 39°57.00′ N. lat., 124°05.00′ W. long.;

(2) 39°57.00′ N. lat., 124°02.00′ W. long.;

(3) 39°54.00′ N. lat., 124°02.00′ W. long.;

(4) 39°54.00′ N. lat., 124°05.00′ W. long.; and connecting back to 39°57.00′ N. lat., 124°05.00′ W. long.

* * * * *

16. In § 660.391 paragraphs (d) through (m) are redesignated as paragraphs (e) through (n), and new paragraph (d) is added to read as follows:

§ 660.391 Latitude/longitude coordinates defining the 10-fm (18-m) through 40-fm (73-m) depth contours.

* * * * *

(d) The 25-fm (46-m) depth contour between the Queets River, WA, and 42° N. lat., modified to reduce impacts on canary and yelloweye rockfish by shifting the line shoreward in the area between 47°31.70′ N. lat. and 46°44.18′ N. lat., is defined by straight lines connecting all of the following points in the order stated:

(1) 47°31.70′ N. lat., 124°34.66′ W. long.;

(2) 47°25.67′ N. lat., 124°32.78′ W. long.;

(3) 47°12.82′ N. lat., 124°26.00′ W. long.;

(4) 46°52.94′ N. lat., 124°18.94′ W. long.;

(5) 46°44.18′ N. lat., 124°14.89′ W. long.;

(6) 46°38.17′ N. lat., 124°13.70′ W. long.;

(7) 46°16.00′ N. lat., 124°12.50′ W. long.;

(8) 46°15.99′ N. lat., 124°12.04′ W. long.;

(9) 46°13.72′ N. lat., 124°11.04′ W. long.;

(10) 46°09.50′ N. lat., 124°07.62′ W. long.;

(11) 46°04.00′ N. lat., 124°03.20′ W. long.;

(12) 45°57.61′ N. lat., 124°01.85′ W. long.;

(13) 45°51.73′ N. lat., 124°01.06′ W. long.;

(14) 45°47.27′ N. lat., 124°01.22′ W. long.;

(15) 45°43.19′ N. lat., 124°00.32′ W. long.;

(16) 45°36.11′ N. lat., 124°00.38′ W. long.;

(17) 45°32.95′ N. lat., 124°01.38′ W. long.;

(18) 45°27.47′ N. lat., 124°01.46′ W. long.;

(19) 45°23.18′ N. lat., 124°01.94′ W. long.;

(20) 45°19.04′ N. lat., 124°01.29′ W. long.;

(21) 45°16.79′ N. lat., 124°01.90′ W. long.;

(22) 45°13.54′ N. lat., 124°01.64′ W. long.;

(23) 45°09.56′ N. lat., 124°01.94′ W. long.;

(24) 45°06.15′ N. lat., 124°02.38′ W. long.;

(25) 45°00.77′ N. lat., 124°03.72′ W. long.;

(26) 44°49.08′ N. lat., 124°06.49′ W. long.;

(27) 44°40.06′ N. lat., 124°08.14′ W. long.;

(28) 44°36.64′ N. lat., 124°08.51′ W. long.;

(29) 44°29.41′ N. lat., 124°09.24′ W. long.;

(30) 44°25.18′ N. lat., 124°09.37′ W. long.;

(31) 44°16.34′ N. lat., 124°10.30′ W. long.;

(32) 44°12.16′ N. lat., 124°10.82′ W. long.;

(33) 44°06.59′ N. lat., 124°11.00′ W. long.;

(34) 44°02.09′ N. lat., 124°11.24′ W. long.;

(35) 43°57.82′ N. lat., 124°11.60′ W. long.;

(36) 43°53.44′ N. lat., 124°12.34′ W. long.;

(37) 43°49.19′ N. lat., 124°13.08′ W. long.;

(38) 43°45.19′ N. lat., 124°13.73′ W. long.;

(39) 43°41.22′ N. lat., 124°14.59′ W. long.;

(40) 43°37.52′ N. lat., 124°15.05′ W. long.;

(41) 43°33.97′ N. lat., 124°16.00′ W. long.;

(42) 43°29.72′ N. lat., 124°17.78′ W. long.;

(43) 43°27.63′ N. lat., 124°19.11′ W. long.;

(44) 43°20.66′ N. lat., 124°25.39′ W. long.;

(45) 43°15.57′ N. lat., 124°26.86′ W. long.;

(46) 43°06.88′ N. lat., 124°29.30′ W. long.;

(47) 43°03.37′ N. lat., 124°29.06′ W. long.;

(48) 43°01.03′ N. lat., 124°29.41′ W. long.;

(49) 42°56.59′ N. lat., 124°31.93′ W. long.;

(50) 42°54.08′ N. lat., 124°34.55′ W. long.;

(51) 42°51.16′ N. lat., 124°37.02′ W. long.;

(52) 42°49.27′ N. lat., 124°37.73′ W. long.;

(53) 42°46.02′ N. lat., 124°37.54′ W. long.;

(54) 42°45.76′ N. lat., 124°35.68′ W. long.;

(55) 42°42.25′ N. lat., 124°30.47′ W. long.;

(56) 42°40.51′ N. lat., 124°29.00′ W. long.;

(57) 42°40.00′ N. lat., 124°29.01′ W. long.;

(58) 42°39.64′ N. lat., 124°28.28′ W. long.;

(59) 42°38.80′ N. lat., 124°27.57′ W. long.;

(60) 42°35.42′ N. lat., 124°26.77′ W. long.;

(61) 42°33.13′ N. lat., 124°29.06′ W. long.;

(62) 42°31.44′ N. lat., 124°30.71′ W. long.;

(63) 42°29.03′ N. lat., 124°31.71′ W. long.;

(64) 42°24.98′ N. lat., 124°29.95′ W. long.;

(65) 42°20.05′ N. lat., 124°28.16′ W. long.;

(66) 42°14.24′ N. lat., 124°26.03′ W. long.;

(67) 42°10.23′ N. lat., 124°23.93′ W. long.;

(68) 42°06.20′ N. lat., 124°22.70′ W. long.;

(69) 42°04.66′ N. lat., 124°21.49′ W. long.; and

(70) 42°00.00′ N. lat., 124°20.80′ W. long.

* * * * *

17. In § 660.392:

A. Paragraphs (a)(120) through (192) are revised, and paragraph (a)(193) is added;

B. Paragraphs (f)(137) through (194) are revised, and paragraphs (f)(195) through (204) are added:

C. Paragraphs (g)(1) through (28) are revised, and paragraph (g)(29) is removed;

D. Paragraphs (h)(1) through (14) are revised;

E. Paragraphs (i)(1) through (16) are revised, and paragraph (i)(17) is added;

F. Paragraphs (j)(144) through (244) are revised, and paragraphs (j)(245) through (253) are added;

G. Paragraphs (k)(1) through (31) are revised, and paragraphs (k)(32) through (38) are removed, and

H. Paragraphs (m)(1) through (18) are revised.

The revisions and additions read as follows:

§ 660.392 Latitude/longitude coordinates defining the 50-fm (91-m) through 75-fm (137-m) depth contours.

* * * * *

(a) * * *

(120) 36°10.41′ N. lat., 121°42.88′ W. long.;

(121) 36°02.56′ N. lat., 121°36.37′ W. long.;

(122) 36°01.11′ N. lat., 121°36.39′ W. long.;

(123) 36°00.00′ N. lat., 121°35.15′ W. long.;

(124) 35°58.26′ N. lat., 121°32.88′ W. long.;

(125) 35°40.38′ N. lat., 121°22.59′ W. long.;

(126) 35°27.74′ N. lat., 121°04.69′ W. long.;

(127) 35°01.43′ N. lat., 120°48.01′ W. long.;

(128) 34°37.98′ N. lat., 120°46.48′ W. long.;

(129) 34°32.98′ N. lat., 120°43.34′ W. long.;

(130) 34°27.00′ N. lat., 120°33.31′ W. long.;

(131) 34°23.47′ N. lat., 120°24.76′ W. long.;

(132) 34°25.78′ N. lat., 120°16.82′ W. long.;

(133) 34°24.65′ N. lat., 120°04.83′ W. long.;

(134) 34°23.18′ N. lat., 119°56.18′ W. long.;

(135) 34°19.20′ N. lat., 119°41.64′ W. long.;

(136) 34°16.82′ N. lat., 119°35.32′ W. long.;

(137) 34°13.43′ N. lat., 119°32.29′ W. long.;

(138) 34°05.39′ N. lat., 119°15.13′ W. long.;

(139) 34°07.98′ N. lat., 119°13.43′ W. long.;

(140) 34°07.64′ N. lat., 119°13.10′ W. long.;

(141) 34°04.56′ N. lat., 119°13.73′ W. long.;

(142) 34°03.90′ N. lat., 119°12.66′ W. long.;

(143) 34°03.66′ N. lat., 119°06.82′ W. long.;

(144) 34°04.58′ N. lat., 119°04.91′ W. long.;

(145) 34°01.28′ N. lat., 119°00.21′ W. long.;

(146) 34°00.19′ N. lat., 119°03.14′ W. long.;

(147) 33°59.66′ N. lat., 119°03.10′ W. long.;

(148) 33°59.54′ N. lat., 119°00.88′ W. long.;

(149) 34°00.82′ N. lat., 118°59.03′ W. long.;

(150) 33°59.11′ N. lat., 118°47.52′ W. long.;

(151) 33°59.07′ N. lat., 118°36.33′ W. long.;

(152) 33°55.06′ N. lat., 118°32.86′ W. long.;

(153) 33°53.56′ N. lat., 118°37.75′ W. long.;

(154) 33°51.22′ N. lat., 118°36.14′ W. long.;

(155) 33°50.48′ N. lat., 118°32.16′ W. long.;

(156) 33°51.86′ N. lat., 118°28.71′ W. long.;

(157) 33°50.09′ N. lat., 118°27.88′ W. long.;

(158) 33°49.95′ N. lat., 118°26.38′ W. long.;

(159) 33°50.73′ N. lat., 118°26.17′ W. long.;

(160) 33°49.86′ N. lat., 118°24.25′ W. long.;

(161) 33°48.10′ N. lat., 118°26.87′ W. long.;

(162) 33°47.54′ N. lat., 118°29.66′ W. long.;

(163) 33°44.10′ N. lat., 118°25.25′ W. long.;

(164) 33°41.78′ N. lat., 118°20.28′ W. long.;

(165) 33°38.18′ N. lat., 118°15.69′ W. long.;

(166) 33°37.50′ N. lat., 118°16.71′ W. long.;

(167) 33°35.98′ N. lat., 118°16.54′ W. long.;

(168) 33°34.15′ N. lat., 118°11.22′ W. long.;

(169) 33°34.29′ N. lat., 118°08.35′ W. long.;

(170) 33°35.53′ N. lat., 118°06.66′ W. long.;

(171) 33°35.93′ N. lat., 118°04.78′ W. long.;

(172) 33°34.97′ N. lat., 118°02.91′ W. long.;

(173) 33°33.84′ N. lat., 117°59.77′ W. long.;

(174) 33°35.33′ N. lat., 117°55.89′ W. long.;

(175) 33°35.05′ N. lat., 117°53.72′ W. long.;

(176) 33°31.32′ N. lat., 117°48.01′ W. long.;

(177) 33°27.99′ N. lat., 117°45.19′ W. long.;

(178) 33°26.93′ N. lat., 117°44.24′ W. long.;

(179) 33°25.46′ N. lat., 117°42.06′ W. long.;

(180) 33°18.45′ N. lat., 117°35.73′ W. long.;

(181) 33°10.29′ N. lat., 117°25.68′ W. long.;

(182) 33°07.47′ N. lat., 117°21.62′ W. long.;

(183) 33°04.47′ N. lat., 117°21.24′ W. long.;

(184) 32°59.89′ N. lat., 117°19.11′ W. long.;

(185) 32°57.41′ N. lat., 117°18.64′ W. long.;

(186) 32°55.71′ N. lat., 117°18.99′ W. long.;

(187) 32°54.43′ N. lat., 117°16.93′ W. long.;

(188) 32°52.34′ N. lat., 117°16.73′ W. long.;

(189) 32°52.64′ N. lat., 117°17.76′ W. long.;

(190) 32°52.24′ N. lat., 117°19.36′ W. long.;

(191) 32°47.06′ N. lat., 117°21.92′ W. long.;

(192) 32°41.93′ N. lat., 117°19.68′ W. long.; and

(193) 32°33.59′ N. lat., 117°17.89′ W. long.

* * * * *

(f) * * *

(137) 36°00.00′ N. lat., 121°35.34′ W. long.;

(138) 35°58.25′ N. lat., 121°32.88′ W. long.;

(139) 35°40.38′ N. lat., 121°22.59′ W. long.;

(140) 35°26.31′ N. lat., 121°03.73′ W. long.;

(141) 35°01.36′ N. lat., 120°49.02′ W. long.;

(142) 34°39.52′ N. lat., 120°48.72′ W. long.;

(143) 34°31.26′ N. lat., 120°44.12′ W. long.;

(144) 34°27.00′ N. lat., 120°36.00′ W. long.;

(145) 34°23.00′ N. lat., 120°25.32′ W. long.;

(146) 34°25.65′ N. lat., 120°17.20′ W. long.;

(147) 34°23.18′ N. lat., 119°56.17′ W. long.;

(148) 34°18.73′ N. lat., 119°41.89′ W. long.;

(149) 34°11.18′ N. lat., 119°31.21′ W. long.;

(150) 34°10.01′ N. lat., 119°25.84′ W. long.;

(151) 34°03.88′ N. lat., 119°12.46′ W. long.;

(152) 34°03.58′ N. lat., 119°06.71′ W. long.;

(153) 34°04.52′ N. lat., 119°04.89′ W. long.;

(154) 34°01.28′ N. lat., 119°00.27′ W. long.;

(155) 34°00.20′ N. lat., 119°03.18′ W. long.;

(156) 33°59.60′ N. lat., 119°03.14′ W. long.;
(157) 33°59.45′ N. lat., 119°00.87′ W. long.;
(158) 34°00.71′ N. lat., 118°59.07′ W. long.;
(159) 33°59.05′ N. lat., 118°47.34′ W. long.;
(160) 33°58.86′ N. lat., 118°36.24′ W. long.;
(161) 33°55.05′ N. lat., 118°32.85′ W. long.;
(162) 33°53.63′ N. lat., 118°37.88′ W. long.;
(163) 33°51.22′ N. lat., 118°36.13′ W. long.;
(164) 33°50.19′ N. lat., 118°32.19′ W. long.;
(165) 33°51.28′ N. lat., 118°29.12′ W. long.;
(166) 33°49.89′ N. lat., 118°28.04′ W. long.;
(167) 33°49.95′ N. lat., 118°26.38′ W. long.;
(168) 33°50.73′ N. lat., 118°26.16′ W. long.;
(169) 33°50.06′ N. lat., 118°24.79′ W. long.;
(170) 33°48.48′ N. lat., 118°26.86′ W. long.;
(171) 33°47.75′ N. lat., 118°30.21′ W. long.;
(172) 33°44.10′ N. lat., 118°25.25′ W. long.;
(173) 33°41.77′ N. lat., 118°20.32′ W. long.;
(174) 33°38.17′ N. lat., 118°15.69′ W. long.;
(175) 33°37.48′ N. lat., 118°16.72′ W. long.;
(176) 33°35.80′ N. lat., 118°16.65′ W. long.;
(177) 33°33.92′ N. lat., 118°11.36′ W. long.;
(178) 33°34.09′ N. lat., 118°08.15′ W. long.;
(179) 33°35.73′ N. lat., 118°05.01′ W. long.;
(180) 33°33.75′ N. lat., 117°59.82′ W. long.;
(181) 33°35.25′ N. lat., 117°55.89′ W. long.;
(182) 33°35.03′ N. lat., 117°53.80′ W. long.;
(183) 33°31.37′ N. lat., 117°48.15′ W. long.;
(184) 33°27.49′ N. lat., 117°44.85′ W. long.;
(185) 33°16.63′ N. lat., 117°34.01′ W. long.;
(186) 33°07.21′ N. lat., 117°21.96′ W. long.;
(187) 33°03.35′ N. lat., 117°21.22′ W. long.;
(188) 33°02.14′ N. lat., 117°20.26′ W. long.;
(189) 32°59.87′ N. lat., 117°19.16′ W. long.;
(190) 32°57.39′ N. lat., 117°18.72′ W. long.;
(191) 32°56.11′ N. lat., 117°18.41′ W. long.;
(192) 32°55.31′ N. lat., 117°18.80′ W. long.;
(193) 32°54.38′ N. lat., 117°17.09′ W. long.;
(194) 32°52.81′ N. lat., 117°16.94′ W. long.;
(195) 32°52.56′ N. lat., 117°19.30′ W. long.;
(196) 32°50.86′ N. lat., 117°20.98′ W. long.;
(197) 32°46.96′ N. lat., 117°22.69′ W. long.;
(198) 32°45.58′ N. lat., 117°22.38′ W. long.;
(199) 32°44.98′ N. lat., 117°21.87′ W. long.;
(200) 32°43.52′ N. lat., 117°19.32′ W. long.;
(201) 32°41.52′ N. lat., 117°20.12′ W. long.;
(202) 32°37.00′ N. lat., 117°20.10′ W. long.;
(203) 32°34.76′ N. lat., 117°18.77′ W. long.; and
(204) 32°33.70′ N. lat., 117°18.46′ W. long.

(g) * * *
(1) 34°09.83′ N. lat., 120°25.61′ W. long.;
(2) 34°07.03′ N. lat., 120°16.43′ W. long.;
(3) 34°06.38′ N. lat., 120°04.00′ W. long.;
(4) 34°07.90′ N. lat., 119°55.12′ W. long.;
(5) 34°05.07′ N. lat., 119°37.33′ W. long.;
(6) 34°05.04′ N. lat., 119°32.80′ W. long.;
(7) 34°04.00′ N. lat., 119°26.70′ W. long.;
(8) 34°02.27′ N. lat., 119°18.73′ W. long.;
(9) 34°00.98′ N. lat., 119°19.10′ W. long.;
(10) 33°59.44′ N. lat., 119°21.89′ W. long.;
(11) 33°58.70′ N. lat., 119°32.22′ W. long.;
(12) 33°57.81′ N. lat., 119°33.72′ W. long.;
(13) 33°57.65′ N. lat., 119°35.94′ W. long.;
(14) 33°56.14′ N. lat., 119°41.09′ W. long.;
(15) 33°55.84′ N. lat., 119°48.00′ W. long.;
(16) 33°57.22′ N. lat., 119°52.09′ W. long.;
(17) 33°59.32′ N. lat., 119°55.65′ W. long.;
(18) 33°57.73′ N. lat., 119°55.06′ W. long.;
(19) 33°56.48′ N. lat., 119°53.80′ W. long.;
(20) 33°49.29′ N. lat., 119°55.76′ W. long.;
(21) 33°48.11′ N. lat., 119°59.72′ W. long.;
(22) 33°49.14′ N. lat., 120°03.58′ W. long.;
(23) 33°52.95′ N. lat., 120°10.00′ W. long.;
(24) 33°56.00′ N. lat., 120°17.00′ W. long.;
(25) 34°00.12′ N. lat., 120°28.12′ W. long.;
(26) 34°08.23′ N. lat., 120°36.25′ W. long.;
(27) 34°08.80′ N. lat., 120°34.58′ W. long.; and
(28) 34°09.83′ N. lat., 120°25.61′ W. long.

(h) * * *
(1) 33°04.44′ N. lat., 118°37.61′ W. long.;
(2) 33°02.56′ N. lat., 118°34.12′ W. long.;
(3) 32°55.54′ N. lat., 118°28.87′ W. long.;
(4) 32°55.02′ N. lat., 118°27.69′ W. long.;
(5) 32°49.78′ N. lat., 118°20.88′ W. long.;
(6) 32°48.32′ N. lat., 118°19.89′ W. long.;
(7) 32°47.60′ N. lat., 118°22.00′ W. long.;
(8) 32°44.59′ N. lat., 118°24.52′ W. long.;
(9) 32°49.97′ N. lat., 118°31.52′ W. long.;
(10) 32°53.62′ N. lat., 118°32.94′ W. long.;
(11) 32°55.63′ N. lat., 118°34.82′ W. long.;
(12) 33°00.71′ N. lat., 118°38.42′ W. long.;
(13) 33°03.49′ N. lat., 118°38.81′ W. long.; and
(14) 33°04.44′ N. lat., 118°37.61′ W. long.

(i) * * *
(1) 33°28.15′ N. lat., 118°38.17′ W. long.;
(2) 33°29.23′ N. lat., 118°36.27′ W. long.;
(3) 33°28.85′ N. lat., 118°30.85′ W. long.;
(4) 33°26.69′ N. lat., 118°27.37′ W. long.;
(5) 33°26.30′ N. lat., 118°25.38′ W. long.;
(6) 33°25.35′ N. lat., 118°22.83′ W. long.;
(7) 33°22.60′ N. lat., 118°18.82′ W. long.;
(8) 33°19.49′ N. lat., 118°16.91′ W. long.;
(9) 33°17.13′ N. lat., 118°16.58′ W. long.;
(10) 33°16.65′ N. lat., 118°17.71′ W. long.;
(11) 33°18.35′ N. lat., 118°27.86′ W. long.;
(12) 33°20.07′ N. lat., 118°32.34′ W. long.;

(13) 33°21.82′ N. lat., 118°32.08′ W. long.;
(14) 33°23.15′ N. lat., 118°29.89′ W. long.;
(15) 33°24.99′ N. lat., 118°32.25′ W. long.;
(16) 33°25.73′ N. lat., 118°34.88′ W. long.; and
(17) 33°28.15′ N. lat., 118°38.17′ W. long.
(j) * * *
(144) 37°28.20′ N. lat., 122°54.92′ W. long.;
(145) 37°27.34′ N. lat., 122°52.91′ W. long.;
(146) 37°26.45′ N. lat., 122°52.95′ W. long.;
(147) 37°26.06′ N. lat., 122°51.17′ W. long.;
(148) 37°23.07′ N. lat., 122°51.34′ W. long.;
(149) 37°11.00′ N. lat., 122°43.89′ W. long.;
(150) 37°07.00′ N. lat., 122°41.06′ W. long.;
(151) 37°04.12′ N. lat., 122°38.94′ W. long.;
(152) 37°00.64′ N. lat., 122°33.26′ W. long.;
(153) 36°59.15′ N. lat., 122°27.84′ W. long.;
(154) 37°01.41′ N. lat., 122°24.41′ W. long.;
(155) 36°58.75′ N. lat., 122°23.81′ W. long.;
(156) 36°59.17′ N. lat., 122°21.44′ W. long.;
(157) 36°57.51′ N. lat., 122°20.69′ W. long.;
(158) 36°51.46′ N. lat., 122°10.01′ W. long.;
(159) 36°48.43′ N. lat., 122°06.47′ W. long.;
(160) 36°48.66′ N. lat., 122°04.99′ W. long.;
(161) 36°47.75′ N. lat., 122°03.33′ W. long.;
(162) 36°51.23′ N. lat., 121°57.79′ W. long.;
(163) 36°49.72′ N. lat., 121°57.87′ W. long.;
(164) 36°48.84′ N. lat., 121°58.68′ W. long.;
(165) 36°47.89′ N. lat., 121°58.53′ W. long.;
(166) 36°48.66′ N. lat., 121°50.49′ W. long.;
(167) 36°45.56′ N. lat., 121°54.11′ W. long.;
(168) 36°45.30′ N. lat., 121°57.62′ W. long.;
(169) 36°38.54′ N. lat., 122°01.13′ W. long.;
(170) 36°35.76′ N. lat., 122°00.87′ W. long.;
(171) 36°32.58′ N. lat., 121°59.12′ W. long.;
(172) 36°32.95′ N. lat., 121°57.62′ W. long.;
(173) 36°31.96′ N. lat., 121°56.27′ W. long.;
(174) 36°31.74′ N. lat., 121°58.24′ W. long.;
(175) 36°30.57′ N. lat., 121°59.66′ W. long.;
(176) 36°27.80′ N. lat., 121°59.30′ W. long.;
(177) 36°26.52′ N. lat., 121°58.09′ W. long.;
(178) 36°23.65′ N. lat., 121°58.94′ W. long.;
(179) 36°20.93′ N. lat., 122°00.28′ W. long.;
(180) 36°18.23′ N. lat., 122°03.10′ W. long.;
(181) 36°14.21′ N. lat., 121°57.73′ W. long.;
(182) 36°14.68′ N. lat., 121°55.43′ W. long.;
(183) 36°10.42′ N. lat., 121°42.90′ W. long.;
(184) 36°02.55′ N. lat., 121°36.35′ W. long.;
(185) 36°01.04′ N. lat., 121°36.47′ W. long.;
(186) 36°00.00′ N. lat., 121°35.40′ W. long.;
(187) 35°58.25′ N. lat., 121°32.88′ W. long.;
(188) 35°39.35′ N. lat., 121°22.63′ W. long.;
(189) 35°25.09′ N. lat., 121°03.02′ W. long.;
(190) 35°10.84′ N. lat., 120°55.90′ W. long.;
(191) 35°04.35′ N. lat., 120°51.62′ W. long.;
(192) 34°55.25′ N. lat., 120°49.36′ W. long.;
(193) 34°47.95′ N. lat., 120°50.76′ W. long.;
(194) 34°39.27′ N. lat., 120°49.16′ W. long.;
(195) 34°31.05′ N. lat., 120°44.71′ W. long.;
(196) 34°27.00′ N. lat., 120°36.54′ W. long.;
(197) 34°22.60′ N. lat., 120°25.41′ W. long.;
(198) 34°25.45′ N. lat., 120°17.41′ W. long.;
(199) 34°22.94′ N. lat., 119°56.40′ W. long.;
(200) 34°18.37′ N. lat., 119°42.01′ W. long.;
(201) 34°11.22′ N. lat., 119°32.47′ W. long.;
(202) 34°09.58′ N. lat., 119°25.94′ W. long.;
(203) 34°03.89′ N. lat., 119°12.47′ W. long.;
(204) 34°03.57′ N. lat., 119°06.72′ W. long.;
(205) 34°04.53′ N. lat., 119°04.90′ W. long.;
(206) 34°02.84′ N. lat., 119°02.37′ W. long.;
(207) 34°01.30′ N. lat., 119°00.26′ W. long.;
(208) 34°00.22′ N. lat., 119°03.20′ W. long.;
(209) 33°59.56′ N. lat., 119°03.36′ W. long.;
(210) 33°59.35′ N. lat., 119°00.92′ W. long.;
(211) 34°00.49′ N. lat., 118°59.08′ W. long.;
(212) 33°59.07′ N. lat., 118°47.34′ W. long.;
(213) 33°58.73′ N. lat., 118°36.45′ W. long.;
(214) 33°55.24′ N. lat., 118°33.42′ W. long.;
(215) 33°53.71′ N. lat., 118°38.01′ W. long.;
(216) 33°51.19′ N. lat., 118°36.50′ W. long.;
(217) 33°49.85′ N. lat., 118°32.31′ W. long.;
(218) 33°49.61′ N. lat., 118°28.07′ W. long.;
(219) 33°49.77′ N. lat., 118°26.34′ W. long.;
(220) 33°50.36′ N. lat., 118°25.84′ W. long.;
(221) 33°49.92′ N. lat., 118°25.05′ W. long.;
(222) 33°48.70′ N. lat., 118°26.70′ W. long.;
(223) 33°47.72′ N. lat., 118°30.48′ W. long.;
(224) 33°44.11′ N. lat., 118°25.25′ W. long.;
(225) 33°41.62′ N. lat., 118°20.31′ W. long.;
(226) 33°38.15′ N. lat., 118°15.85′ W. long.;
(227) 33°37.53′ N. lat., 118°16.82′ W. long.;
(228) 33°35.76′ N. lat., 118°16.75′ W. long.;
(229) 33°33.76′ N. lat., 118°11.37′ W. long.;
(230) 33°33.76′ N. lat., 118°07.94′ W. long.;
(231) 33°35.59′ N. lat., 118°05.05′ W. long.;
(232) 33°33.67′ N. lat., 117°59.98′ W. long.;
(233) 33°34.98′ N. lat., 117°55.66′ W. long.;
(234) 33°34.84′ N. lat., 117°53.83′ W. long.;
(235) 33°31.43′ N. lat., 117°48.76′ W. long.;
(236) 33°16.61′ N. lat., 117°34.49′ W. long.;
(237) 33°07.43′ N. lat., 117°22.40′ W. long.;
(238) 33°02.93′ N. lat., 117°21.12′ W. long.;
(239) 33°02.09′ N. lat., 117°20.28′ W. long.;
(240) 32°59.91′ N. lat., 117°19.28′ W. long.;
(241) 32°57.27′ N. lat., 117°18.82′ W. long.;
(242) 32°56.17′ N. lat., 117°19.43′ W. long.;

(243) 32°55.22′ N. lat., 117°19.09′ W. long.;
(244) 32°54.30′ N. lat., 117°17.13′ W. long.;
(245) 32°52.89′ N. lat., 117°17.03′ W. long.;
(246) 32°52.61′ N. lat., 117°19.50′ W. long.;
(247) 32°50.85′ N. lat., 117°21.14′ W. long.;
(248) 32°47.11′ N. lat., 117°22.95′ W. long.;
(249) 32°45.66′ N. lat., 117°22.60′ W. long.;
(250) 32°42.99′ N. lat., 117°20.70′ W. long.;
(251) 32°40.72′ N. lat., 117°20.23′ W. long.;
(252) 32°38.11′ N. lat., 117°20.59′ W. long.; and
(253) 32°33.83′ N. lat., 117°19.18′ W. long.
(k) * * *
(1) 34°10.82′ N. lat., 120°33.26′ W. long.;
(2) 34°11.78′ N. lat., 120°28.12′ W. long.;
(3) 34°08.65′ N. lat., 120°18.46′ W. long.;
(4) 34°07.01′ N. lat., 120°10.46′ W. long.;
(5) 34°06.56′ N. lat., 120°04.00′ W. long.;
(6) 34°08.11′ N. lat., 119°55.01′ W. long.;
(7) 34°05.18′ N. lat., 119°37.94′ W. long.;
(8) 34°05.22′ N. lat., 119°35.52′ W. long.;
(9) 34°05.12′ N. lat., 119°32.74′ W. long.;
(10) 34°04.32′ N. lat., 119°27.32′ W. long.;
(11) 34°02.32′ N. lat., 119°18.46′ W. long.;
(12) 34°00.95′ N. lat., 119°18.95′ W. long.;
(13) 33°59.40′ N. lat., 119°21.74′ W. long.;
(14) 33°58.70′ N. lat., 119°32.21′ W. long.;
(15) 33°56.12′ N. lat., 119°41.10′ W. long.;
(16) 33°55.74′ N. lat., 119°48.00′ W. long.;
(17) 33°56.91′ N. lat., 119°52.04′ W. long.;
(18) 33°59.06′ N. lat., 119°55.38′ W. long.;
(19) 33°57.82′ N. lat., 119°54.99′ W. long.;
(20) 33°56.58′ N. lat., 119°53.75′ W. long.;
(21) 33°54.43′ N. lat., 119°54.07′ W. long.;
(22) 33°52.67′ N. lat., 119°54.78′ W. long.;
(23) 33°48.33′ N. lat., 119°55.09′ W. long.;
(24) 33°47.28′ N. lat., 119°57.30′ W. long.;
(25) 33°47.36′ N. lat., 120°00.39′ W. long.;
(26) 33°49.16′ N. lat., 120°05.06′ W. long.;
(27) 33°52.00′ N. lat., 120°08.15′ W. long.;
(28) 33°58.11′ N. lat., 120°25.59′ W. long.;
(29) 34°02.15′ N. lat., 120°32.70′ W. long.;
(30) 34°08.86′ N. lat., 120°37.12′ W. long.; and
(31) 34°10.82′ N. lat., 120°33.26′ W. long.

* * * * *

(m) * * *
(1) 33°28.17′ N. lat., 118°38.16′ W. long.;
(2) 33°29.35′ N. lat., 118°36.23′ W. long.;
(3) 33°28.85′ N. lat., 118°30.85′ W. long.;
(4) 33°26.69′ N. lat., 118°27.37′ W. long.;
(5) 33°26.33′ N. lat., 118°25.37′ W. long.;
(6) 33°25.35′ N. lat., 118°22.83′ W. long.;
(7) 33°22.47′ N. lat., 118°18.53′ W. long.;
(8) 33°19.51′ N. lat., 118°16.82′ W. long.;
(9) 33°17.07′ N. lat., 118°16.38′ W. long.;
(10) 33°16.58′ N. lat., 118°17.61′ W. long.;
(11) 33°18.35′ N. lat., 118°27.86′ W. long.;
(12) 33°20.07′ N. lat., 118°32.35′ W. long.;
(13) 33°21.82′ N. lat., 118°32.09′ W. long.;
(14) 33°23.15′ N. lat., 118°29.99′ W. long.;
(15) 33°24.96′ N. lat., 118°32.21′ W. long.;
(16) 33°25.67′ N. lat., 118°34.88′ W. long.;
(17) 33°27.57′ N. lat., 118°37.90′ W. long.; and
(18) 33°28.17′ N. lat., 118°38.16′ W. long.

18. In § 660.393:

A. Paragraphs (a)(210) through (297) are redesignated as (a)(220) through (307), and paragraphs (a)(35) through (209) are redesignated as (a)(38) through (212);

B. Paragraphs (h)(215) through (291) are redesignated as (h)(224) through (300), and paragraphs (h)(187) through (214) are redesignated as (h)(188) through (215);

C. New paragraphs (a)(35) through (37), (a)(213) through (219), (h)(187), and (h)(216) through (223) are added; and

D. Newly redesignated paragraphs (a)(261), (262), and (304) and (h)(188), (201), (206), and (249) are revised.

The additions and revisions read as follows:

§ 660.393 Latitude/longitude coordinates defining the 100 fm (183 m) through 150 fm (274 m) depth contours.

(a) * * *
(35) 48°02.35′ N. lat., 125°17.30′ W. long.;
(36) 48°02.35′ N. lat., 125°18.07′ W. long.;
(37) 48°00.00′ N. lat., 125°19.30′ W. long.;

* * * * *

(213) 37°26.81′ N. lat., 122°55.57′ W. long.;
(214) 37°26.78′ N. lat., 122°53.91′ W. long.;
(215) 37°25.74′ N. lat., 122°54.13′ W. long.;
(216) 37°25.33′ N. lat., 122°53.59′ W. long.;
(217) 37°25.29′ N. lat., 122°52.57′ W. long.;
(218) 37°24.50′ N. lat., 122°52.09′ W. long.;
(219) 37°23.25′ N. lat., 122°53.12′ W. long.;

* * * * *

(261) 36°00.00′ N. lat., 121°35.41′ W. long.;
(262) 35°57.84′ N. lat., 121°32.81′ W. long.;

* * * * *

(304) 32°53.36′ N. lat., 117°19.97′ W. long.;

* * * * *

(h) * * *
(187) 39°39.82 N. lat., 123°59.98′ W. long.;
(188) 39°34.59 N. lat., 123°58.08′ W. long.;

* * * * *

(201) 38°18.75 N. lat., 123°31.21′ W. long.;

* * * * *

(206) 38°06.15 N. lat., 123°30.00′ W. long.;

* * * * *

(216) 37°26.10 N. lat., 122°57.07′ W. long.;
(217) 37°26.51 N. lat., 122°54.23′ W. long.;
(218) 37°25.05′ N. lat., 122°55.64′ W. long.;
(219) 37°24.42′ N. lat., 122°54.94′ W. long.;
(220) 37°25.16′ N. lat., 122°52.73′ W. long.;
(221) 37°24.55′ N. lat., 122°52.48′ W. long.;
(222) 37°22.81′ N. lat., 122°54.36′ W. long.;
(223) 37°19.87′ N. lat., 122°53.98′ W. long.;

* * * * *

(249) 36°00.00′ N. lat., 121°35.45′ W. long.;

* * * * *

19. In § 660.394:

A. Paragraphs (l)(179) through (214) are redesignated as (l)(180) through (242), paragraphs (l)(164) through (l)(177) are redesignated as (l)(166) through (179), and paragraph (l)(130) through (163) are redesignated as paragraphs (l)(131) through (164);

B. Paragraphs (l)(178) is removed;

C. Paragraph (l)(121) is revised;

D. New paragraphs (l)(130) and (165) are added;

E. Newly designated paragraphs (l)(140) and (179) are revised;

F. Paragraphs (m)(119) through (199) are redesignated as (m)(121) through (201);

G. New paragraphs (m)(119) and (120) are added, and

H. Newly redesignated paragraphs (m)(121) and (122) are revised.

The additions and revisions read as follows:

§ 660.394 Latitude/longitude coordinates defining the 180-fm (329-m) through 250-fm (457-m) depth contours.

* * * * *

(l) * * *

(121) 40°38.87′ N. lat., 124°30.15′ W. long.;

* * * * *

(130) 40°16.29′ N. lat., 124°34.50′ W. long.;

* * * * *

(140) 39°55.72′ N. lat., 124°09.86′ W. long.;

* * * * *

(165) 37°55.07′ N. lat., 123°27.20′ W. long.;

* * * * *

(179) 36°55.69′ N. lat., 122°22.32′ W. long.;

* * * * *

(m) * * *

(119) 39°56.44′ N. lat., 124°12.52′ W. long.;

(120) 39°54.98′ N. lat., 124°08.71′ W. long.;

(121) 39°52.60′ N. lat., 124°10.01′ W. long.;

(122) 39°37.37′ N. lat., 124°00.58′ W. long.;

* * * * *

20. In part 660, subpart G, Tables 1–5 are revised to read as follows:

TABLE 1a. TO PART 660, SUBPART G—2009, SPECIFICATIONS OF ABCS, OYS, AND HGS, BY MANAGEMENT AREA

[Weights in metric tons]

Species	ABC specifications						OY[b]	HG[b]	
	ABC contributions by area					ABC		Commercial	Recreational
	Vancouver[a]	Columbia	Eureka	Monterey	Conception				
ROUNDFISH:									
Lingcod[c] N of 42° N. lat									
S of 42° N. lat	4,473		805			5,278	5,278		
Pacific Cod[e]	3,200		([d])			3,200	1,600	1,200	
Pacific Whiting ([f])	([f])					([f])	134,773–404,318		
Sablefish[g] N of 36° N. lat							7,052	6,347	
S of 36° N. lat	9,914					9,914	1,371	1,371	
Cabezon[h]									
S of 42° N. lat	([d])		81		25	106	69		
FLATFISH:									
Dover sole[i]	29,453					29,453	16,500		
English sole[j]	14,326					14,326	14,326		
Petrale sole[k]	1,509		1,302			2,811	2,433		
Arrowtooth flounder[l]	11,267					11,267	11,267		
Starry Flounder[m]	1,509					1,509	1,004		
Other flatfish[n]	6,731					6,731	4,884		
ROCKFISH:									
Pacific Ocean Perch[o]	1,160					1,160	189	187	
Shortbelly[p]	6,950					6,950	6,950		
Widow[q]	7,728					7,728	522	460.4	7.2
Canary[r]	937					937	105	42.3	43.8
Chilipepper[s]	([d])			3,037		3,037	2,885	2,885	
Bocaccio[t]	([d])			793		793	288	206.4	67.3
Splitnose[u]	([d])			615		615	461		

TABLE 1a. TO PART 660, SUBPART G—2009, SPECIFICATIONS OF ABCS, OYS, AND HGS, BY MANAGEMENT AREA—Continued

[Weights in metric tons]

Species	ABC specifications						OY [b]	HG [b]	
	ABC contributions by area					ABC		Commercial	Recreational
	Vancouver [a]	Columbia	Eureka	Monterey	Conception				
Yellowtail [v]	4,562			(d)		4,562	4,562		
Shortspine thornyhead [w] N of 34°27′ N. lat							1,608	1,608	
S of 34°27′ N. lat	2,437					2,437	414		
Longspine thornyhead [x] N of 34°27′ N. lat							2,231		
S of 34°27′ N. lat	3,766					3,766	395		
Cowcod [y]	(d)			13		13	4		
Darkblotched [z]	437					437	285	282.05	
Yelloweye [aa]						31	17	3.1	
California Scorpionfish [bb]						175	175	175	
Black [cc] N of 46°16′ N. lat	490					490	490		
S of 46°16′ N. lat			1,469			1,469	1,000		
Minor Rockfish [dd] N of 40°10′ N. lat	3,678					3,678	2,283		
Minor Rockfish [ee] S of 40°10′ N. lat				3,384		3,384	1,990		
Remaining	1,640			1,318					
Bank [ff]	(d)			350					
Blackgill [gg]	(d)			292					
Blue	28			213					
Bocaccio north	318								
Chilipepper north	32								
Redstripe	576			(d)					
Sharpchin	307			45					
Silvergrey	38			(d)					
Splitnose north	242								
Yellowmouth	99			(d)					
Yellowtail				116					
Gopher	(d)			302					
Other rockfish [hh]	2,038			2,066					
SHARKS/SKATES/RATFISH/MORIDS/GRENADIERS/KELP GREENLING:									
Longnose Skate [ii]	3,428					3,428	1,349		
Other fish [jj]	11,200					11,200	5,600		

TABLE 1b. TO PART 660, SUBPART G—2009, HARVEST GUIDELINES FOR MINOR ROCKFISH BY DEPTH SUB-GROUPS

[Weights in metric tons]

Species	Total catch ABC	Total catch OY	Recreational HG	Commercial HG	Limited entry HG		Open access HG	
					Mt	%	Mt	%
Minor Rockfish [dd] N of 40°10′ N. lat	3,678	2,283				91.7		8.3
Nearshore		155						

TABLE 1b. TO PART 660, SUBPART G—2009, HARVEST GUIDELINES FOR MINOR ROCKFISH BY DEPTH SUB-GROUPS—Continued

[Weights in metric tons]

Species	Total catch ABC	Total catch OY	Recreational HG	Commercial HG	Limited entry HG		Open access HG	
					Mt	%	Mt	%
Shelf		968						
Slope		1,160						
Minor Rockfish [ee] S of 40°10′ N. lat	3,384	1,990				55.7		44.3
Nearshore		650						
Shelf		714						
Slope		626						

TABLE 1c. TO PART 660, SUBPART G—2009, OPEN ACCESS AND LIMITED ENTRY ALLOCATIONS BY SPECIES OR SPECIES GROUP

[Weights in metric tons]

Species	Commercial total catch HGs	Commercial total catch HGs			
		Limited entry	Open access		
			Mt	%	Mt
Lingcod: N of 42° N. lat.					
S of 42° N. lat			81.0		19.0
Sablefish [kk] N of 36° N. lat	6,347	5,750	90.6	597	9.4
Widow [ll]	460.4		97.0		3.0
Canary [ll]	42.3		87.7		12.3
Chilipepper	2,885	1,607	55.7	1,278	44.3
Bocaccio [ll]	206.4		55.7		44.3
Yellowtail			91.7		8.3
Shortspine thornyhead N of 34°27′ N. lat	1,608	1,603	99.7	5	0.27
Minor Rockfish: N of 40°10′ N. lat			91.7		8.3
S of 40°10′ N. lat			55.7		44.3

[a] ABCs apply only to the U.S. portion of the Vancouver area.

[b] Optimum Yields (OYs) and Harvest Guidelines (HGs) are specified as total catch values. A harvest guideline is a specified harvest target and not a quota. The use of this term may differ from the use of similar terms in state regulation.

[c] Lingcod—A coastwide lingcod stock assessment was prepared in 2005. The lingcod biomass was estimated to be at 64 percent of its unfished biomass coastwide in 2005. The ABC of 5,278 mt was calculated using an F_{MSY} proxy of $F_{45\%}$. Because the stock is above $B_{40\%}$ coastwide, the coastwide OY was set equal to the ABC. The tribal harvest guideline is 250 mt.

[d] ''Other species''—These species are neither common nor important to the commercial and recreational fisheries in the areas footnoted. Accordingly, these species are included in the harvest guidelines of ''other fish'', ''other rockfish'' or ''remaining rockfish''.

[e] Pacific Cod—The 3,200 mt ABC for the Vancouver-Columbia area is based on historical landings data. The 1,600 mt OY is the ABC reduced by 50 percent as a precautionary adjustment. A tribal harvest guideline of 400 mt is deducted from the OY resulting in a commercial OY of 1,200 mt.

[f] Pacific whiting—The most recent stock assessment was prepared in February 2008. The stock assessment base model estimated the Pacific whiting biomass to be at 42.6 percent (50th percentile estimate of depletion) of its unfished biomass in 2008. Final adoption of the Pacific whiting ABC and OY have been deferred until the Council's March 2009 meeting. Therefore, table 1a does not contain an ABC value, but does contain the OY range considered in the DEIS. It is anticipated that a new assessment will be available in early 2009 and the results will be used to set the 2009 ABC and OY. The final ABC and OY will be published as a separate action following the Council's recommendation at its March 2009 meeting.

[g] Sablefish—A coastwide sablefish stock assessment was prepared in 2007. The sablefish biomass was estimated to be at 38.3 percent of its unfished biomass in 2007. The coastwide ABC of 9,914 mt was based on the new stock assessment with a F_{MSY} proxy of $F_{45\%}$. The 40–10 harvest policy was applied to the ABC then apportion between the northern and southern areas with 72 percent going to the area north of 36° N. lat. and 28 percent going to the area south of 36° N. lat. The OY for the area north of 36° N. lat. is

7,052 mt. When establishing the OY for the area south of 36° N. lat. a 50 percent reduction was made resulting in a Conception area OY of 1,371 mt. The Coastwide OY of 8,423 mt is the sum of the northern and southern area OYs. The tribal allocation for the area north of 36° N. lat. is 705 mt (10 percent of the OY north of 36° N. lat.), which is further reduced by 1.6 percent (11 mt) to account for discard mortality. The tribal landed catch value is 694 mt.

[h] Cabezon south of 42° N. lat. was assessed in 2005. The Cabezon stock was estimated to be at 40 percent of its unfished biomass north of 34°27′ N. lat. and 28 percent of its unfished biomass south of 34°27′ N. lat. in 2005. The ABC of 106 mt is based on the 2005 stock assessment with a harvest rate proxy of $F_{45\%}$. The OY of 69 mt is consistent with the application of a 60–20 harvest rate policy specified in the California Nearshore Management Plan.

[i] Dover sole north of 34°27′ N. lat. was assessed in 2005. The Dover sole biomass was estimated to be at 59.8 percent of its unfished biomass in 2005 and was projected to be increasing. The ABC of 29,453 mt is based on the results of the 2005 assessment with an F_{MSY} proxy of $F_{40\%}$. Because the stock is above $B_{40\%}$ coastwide, the OY could be set equal to the ABC. The OY of 16,500 mt is less than the ABC. The OY is set at the MSY harvest level which is considerably larger than the coastwide catches in any recent years.

[j] A coastwide English sole stock assessment was prepared in 2005 and updated in 2007. The stock was estimated to be at 116 percent of its unfished biomass in 2007. The stock biomass is believed to be declining. The ABC of 14,326 mt is based on the results of the 2007 assessment update with an F_{MSY} proxy of $F_{40\%}$. Because the stock is above $B_{40\%}$, the OY was set equal to the ABC.

[k] A petrale sole stock assessment was prepared for 2005. In 2005 the petrale sole stock was estimated to be at 32 percent of its unfished biomass coastwide (34 percent in the northern assessment area and 29 percent in the southern assessment area). The ABC of 2,811 mt is based on the 2005 stock assessment with a $F_{40\%}$ F_{MSY} proxy. To derive the OY, the 40–10 harvest policy was applied to the ABC for both the northern and southern assessment areas. As a precautionary measure, an additional 25 percent reduction was made in the OY contribution for the southern area due assessment uncertainty. The coastwide OY is 2,433 mt in 2009.

[l] Arrowtooth flounder was assessed in 2007 and was estimated to be at 79 percent of its unfished biomass in 2007. Because the stock is above $B_{40\%}$, the OY is set equal to the ABC.

[m] Starry Flounder was assessed for the first time in 2005 and was estimated to be above 40 percent of its unfished biomass in 2005. However, the stock was projected to decline below 40 percent in both the northern and southern areas after 2008. The starry flounder assessment was considered to be a data-poor assessment relative to other groundfish assessments. For 2009, the coastwide ABC of 1,509 mt is based on the 2005 assessment with a F_{MSY} proxy of $F_{40\%}$. To derive the OY (1,004 mt), the 40–10 harvest policy was applied to the ABC for both the northern and southern assessment areas then an additional 25 percent reduction was made due to assessment uncertainty.

[n] ''Other flatfish'' are those flatfish species that do not have individual ABC/OYs and include butter sole, curlfin sole, flathead sole, Pacific sand dab, rex sole, rock sole, and sand sole. The other flatfish ABC is based on historical catch levels. The ABC of 6,731 mt is based on the highest landings for sanddabs (1995) and rex sole (1982) for the 1981–2003 period and on the average landings from the 1994–1998 period for the remaining other flatfish species. The OY of 4,884 mt is based on the ABC with a 25 percent precautionary adjustment for sanddabs and rex sole and a 50 percent precautionary adjustment for the remaining species.

[o] A POP stock assessment was prepared in 2005 and was updated in 2007. The stock assessment update estimated the stock to be at 27.5 percent of its unfished biomass in 2007. The ABC of 1,160 mt for the Vancouver and Columbia areas is based on the 2007 stock assessment update with an F_{MSY} proxy of $F_{50\%}$. The OY of 189 mt is based on a rebuilding plan with a target year to rebuild of 2017 and an SPR harvest rate of 86.4 percent. The OY is reduced by 2.0 mt for the amount anticipated to be taken during research activity and 0.14 mt for the amount expected to be taken during EFP fishing.

[p] Shortbelly rockfish remains an unexploited stock and is difficult to assess quantitatively. To understand the potential environmental determinants of fluctuations in the recruitment and abundance of an unexploited rockfish population in the California Current ecosystem, a non-quantitative assessment was conducted in 2007. The results of the assessment indicated the shortbelly stock was healthy with an estimated spawning stock biomass at 67 percent of its unfished biomass in 2005. The ABC and OY are being set at 6,950 mt which is 50 percent of the 2008 ABC and OY values. The stock is expected to remain at its current equilibrium with these harvest specifications.

[q] Widow rockfish was assessed in 2005 and an update was prepared in 2007. The stock assessment update estimated the stock to be at 36.2 percent of its unfished biomass in 2006. The ABC of 7,728 mt is based on the stock assessment update with an $F_{50\%}$ F_{MSY} proxy. The OY of 522 mt is based on a rebuilding plan with a target year to rebuild of 2015 and an SPR harvest rate of 95 percent. To derive the commercial harvest guideline of 460.4 mt the OY is reduced by 1.1 mt for the amount anticipated to be taken during research activity, 45.5 mt for the tribal set-aside, 7.2 mt the amount estimated to be taken in the recreational fisheries, 0.4 mt for the amount expected to be taken incidentally in non-groundfish fisheries, and 7.4 mt for the amount projected to be taken during EFP fishing. The following sector specific bycatch limits will be established for the Pacific whiting fishery: 153.0 mt for catcher/processors, 108.0 mt for motherships, and 189.0 mt for shore-based.

[r] Canary rockfish—A canary rockfish stock assessment was completed in 2007 and the stock was estimated to be at 32.7 percent of its unfished biomass coastwide in 2007. The coastwide ABC of 937 mt based on the 2007 rebuilding plan. The OY of 105 mt is based on a rebuilding plan with a target year to rebuild of 2021 and a SPR harvest rate of 88.7 percent. To derive the commercial harvest guideline of 42.3 mt, the OY is reduced by 8.0 mt for the amount anticipated to be taken during research activity, 7.3 mt the tribal set-aside, 43.8 mt the amount estimated to be taken in the recreational fisheries, 0.9 mt for the amount expected to be taken incidentally in non-groundfish fisheries, and 2.7 mt for the amount expected to be taken during EFP fishing. The following harvest guidelines are being specified for catch sharing in 2009: 19.7 mt for limited entry Non-Whiting Trawl, 18.0 mt for limited entry Whiting Trawl, 2.2 mt for limited entry fixed gear, 2.5 mt for directed open access, 4.9 mt for Washington recreational, 16.0 mt for Oregon recreational, and 22.9 mt for California recreational.

[s] Chilipepper rockfish was assessed in 2007 and the stock was estimated to be at 71 percent of its unfished biomass coastwide in 2007. The ABC of 3,037 mt is based on a F_{MSY} proxy of $F_{50\%}$. Because the unfished biomass is estimated to be above 40 percent the unfished biomass, the default OY could be set equal to the ABC. However, the OY of 2,885 mt was the ABC reduced by 5 percent as a precautionary measure for uncertainty in the stock assessment. Open access is allocated 44.3 percent (1,278 mt) of the commercial HG and limited entry is allocated 55.7 percent (1,607 mt) of the commercial HG.

[t] A bocaccio stock assessment and a rebuilding analysis were prepared in 2007. The bocaccio stock was estimated to be at 13.8 percent of its unfished biomass in 2007. The ABC of 793 mt for the Monterey-Conception area is based on the new assessment with an F_{MSY} proxy of $F_{50\%}$. The OY of 288 mt is based on a rebuilding plan with a target year to rebuild of 2026 and a SPR harvest rate of 77.7 percent. To derive the commercial harvest guideline of 206.4 mt, the OY is reduced by 2.0 mt for the amount anticipated to be taken during research activity, 67.3 mt for the amount estimated to be taken in the recreational fisheries, 1.3 mt for the amount expected to be taken incidentally in non-groundfish fisheries, and 11.0 mt for the amount expected to be taken during EFP fishing.

[u] Splitnose rockfish—The ABC is 615 mt in the Monterey-Conception area. The 461 mt OY for the area reflects a 25 percent precautionary adjustment because of the less rigorous stock assessment for this stock. In the north (Vancouver, Columbia and Eureka areas), splitnose is included within the minor slope rockfish OY. Because the harvest assumptions used to forecast future harvest were likely overestimates, carrying the previously used ABCs and OYs forward into 2009 was considered to be conservative and based on the best available data.

[v] Yellowtail rockfish—A yellowtail rockfish stock assessment was prepared in 2005 for the Vancouver, Columbia, Eureka areas. Yellowtail rockfish was estimated to be above 40 percent of its unfished biomass in 2005. The ABC of 4,562 mt is based on the 2005 stock assessment with the F_{MSY} proxy of $F_{50\%}$. The OY of 4,562 mt was set equal

to the ABC, because the stock is above the precautionary threshold of $B_{40\%}$.

[w] Shortspine thornyhead was assessed in 2005 and the stock was estimated to be at 63 percent of its unfished biomass in 2005. The ABC of 2,437 mt is based on a $F_{50\%}$ F_{MSY} proxy. For that portion of the stock (66 percent of the biomass) north of Point Conception (34°27′ N. lat.), the OY of 1,608 mt was set at equal to the ABC because the stock is estimated to be above the precautionary threshold. For that portion of the stock south of 34°27′ N. lat. (34 percent of the biomass), the OY of 414 mt was the portion of the ABC for the area reduced by 50 percent as a precautionary adjustment due to the short duration and amount of survey data for that area.

[x] Longspine thornyhead was assessed coastwide in 2005 and the stock was estimated to be at 71 percent of its unfished biomass in 2005. The coastwide ABC of 3,766 mt is based on a $F_{50\%}$ F_{MSY} proxy. The OY is set equal to the ABC because the stock is above the precautionary threshold. Separate OYs are being established for the areas north and south of 34°27′ N. lat. (Point Conception). The OY of 2,231 mt for that portion of the stock in the northern area (79 percent) the ABC reduced by 25 percent as a precautionary adjustment. For that portion of the stock in the south of 34°27′ N. lat. (21 percent), the OY of 395 mt was the portion of the ABC for the area reduced by 50 percent as a precautionary adjustment due to the short duration and amount of survey data for that area.

[y] Cowcod in the Conception area was assessed in 2007 and the stock was estimated to be between 3.4 to 16.3 percent of its unfished biomass. The ABC for the area south of 36° N. lat., the Conception and Monterey areas, is 13 mt and is based on the 2007 rebuilding analysis in which the Conception area stock assessment projection was doubled to account for both areas. A single OY of 4 mt is being set for both areas. The OY of 4 mt is based on a rebuilding plan with a target year to rebuild of 2072 and an SPR rate of 82.1 percent. The amount anticipated to be taken during research activity is 0.2 mt and the amount expected to be taken during EFP activity is 0.24 mt.

[z] Darkblotched rockfish was assessed in 2007 and a rebuilding analysis was prepared. The new stock assessment estimated the stock to be at 22.4 percent of its unfished biomass in 2007. The ABC is projected to be 437 mt and is based on the 2007 stock assessment with an F_{MSY} proxy of $F_{50\%}$. The OY of 285 mt is based on a rebuilding plan with a target year to rebuild of 2028 and an SPR harvest rate of 62.1 percent. The commercial OY of 282.05 mt is the OY reduced by 2.0 mt for the amount anticipated to be taken during research activity and 0.95 mt for the amount projected to be taken during EFP activity.

[aa] Yelloweye rockfish was fully assessed in 2006 and an assessment update was completed in 2007. The 2007 stock assessment update estimated the spawning stock biomass in 2006 to be at 14 percent of its unfished biomass coastwide. The 31 mt coastwide ABC was derived from the base model in the new stock assessment with an F_{MSY} proxy of $F_{50\%}$. The 17 mt OY is based on a rebuilding plan with a target year to rebuild of 2084 and an SPR harvest rate of 66.3 percent in 2009 and 2010 and an SPR harvest rate of 71.9 percent for 2011 and beyond. The OY is reduced by 2.8 mt for the amount anticipated to be taken during research activity, 2.3 mt the amount estimated to be taken in the tribal fisheries and 0.3 mt for the amount expected to be taken incidentally in non-groundfish fisheries. The catch sharing harvest guidelines for yelloweye rockfish in 2009 and 2010 are: limited entry non whiting trawl 0.6 mt, limited entry whiting 0.0 mt, limited entry fixed gear 1.4 mt, directed open access 1.1 mt, Washington recreational 2.7 mt, Oregon recreational 2.4 mt, California recreational 2.7 mt, and 0.3 mt for exempted fishing.

[bb] California Scorpionfish south of 34°27′ N. lat. was assessed in 2005 and was estimated to be above 40 percent of its unfished biomass in 2005. The ABC of 175 mt is based on the new assessment with a harvest rate proxy of $F_{50\%}$. Because the stock is above $B_{40\%}$ coastwide, the OY is set equal to the ABC.

[cc] New assessments were prepared for black rockfish south of 45°56.00 N. lat. (Cape Falcon, Oregon) and for black rockfish north of Cape Falcon. The ABC for the area north of 46°16′ N. lat. (Washington) is 490 mt (97 percent) of the 505 mt ABC contribution from the northern assessment area. The ABC for the area south of 46°16′ N. lat. (Oregon and California) is 1,469 mt which is the sum of a contribution of 15 mt (3 percent) from the northern area assessment, and 1,454 mt from the southern area assessment. The ABCs were based on the results of the new assessment and derived using an F_{MSY} proxy of $F_{50\%}$. Because both portions of the stock are above 40 percent, the OYs could be set equal to the ABCs. For the area north of 46°16′ N. lat., the OY of 490 mt is set equal to the ABC. The following tribal harvest guidelines are being set: 20,000 lb (9.1 mt) north of Cape Alava, WA (48°09.50′ N. lat.) and 10,000 lb (4.5 mt) between Destruction Island, WA (47°40′ N. lat.) and Leadbetter Point, WA (46°38.17′ N. lat.) The OY for the area south of 46°16′ N. lat. is being set at 1,000 mt which is a constant harvest level. The black rockfish OY in the area south of 46°16′ N. lat., is subdivided with separate HGs being set for the area north of 42° N. lat. (580 mt/58 percent) and for the area south of 42° N. lat. (420 mt/42 percent).

[dd] Minor rockfish north includes the ''remaining rockfish'' and ''other rockfish'' categories in the Vancouver, Columbia, and Eureka areas combined. These species include ''remaining rockfish'', which generally includes species that have been assessed by less rigorous methods than stock assessments, and ''other rockfish'', which includes species that do not have quantifiable stock assessments. Blue rockfish has been removed from the ''other rockfish'' and added to the remaining rockfish. The ABC of 3,678 mt is the sum of the individual ''remaining rockfish'' ABCs plus the ''other rockfish'' ABCs. The remaining rockfish ABCs continue to be reduced by 25 percent (F=0.75M) as a precautionary adjustment. To obtain the total catch OY of 2,283 mt, the remaining rockfish ABCs were further reduced by 25 percent and other rockfish ABCs were reduced by 50 percent. This was a precautionary measure to address limited stock assessment information.

[ee] Minor rockfish south includes the ''remaining rockfish'' and ''other rockfish'' categories in the Monterey and Conception areas combined. These species include ''remaining rockfish'' which generally includes species that have been assessed by less rigorous methods than stock assessment, and ''other rockfish'' which includes species that do not have quantifiable stock assessments. Blue rockfish has been removed from the ''other rockfish'' and added to the remaining rockfish. The ABC of 3,384 mt is the sum of the individual ''remaining rockfish'' ABCs plus the ''other rockfish'' ABCs. The remaining rockfish ABCs continue to be reduced by 25 percent (F=0.75M) as a precautionary adjustment. The remaining rockfish ABCs are further reduced by 25 percent, with the exception of blackgill rockfish (see footnote gg). The other rockfish ABCs were reduced by 50 percent. This was a precautionary measure due to limited stock assessment information. The resulting minor rockfish OY is 1,990 mt.

[ff] Bank rockfish—The ABC is 350 mt which is based on a 2000 stock assessment for the Monterey and Conception areas. This stock contributes 263 mt towards the minor rockfish OY in the south.

[gg] Blackgill rockfish in the Monterey and Conception areas was assessed in 2005 and is estimated to be at 49.9 percent of its unfished biomass in 2008. The ABC of 292 mt for the Monterey and Conception areas is based on the 2005 stock assessment with an F_{MSY} proxy of $F_{50\%}$ and is the two year average ABC for the 2007 and 2008 periods. This stock contributes 292 mt towards minor rockfish south.

[hh] ''Other rockfish'' includes rockfish species listed in 50 CFR 660.302. A new stock assessment was conducted for blue rockfish in 2007. As a result of the new stock assessment, the blue rockfish contribution to the other rockfish group is of 232 mt in the north and 30 mt in the south are removed. A new contribution of 28 mt contribution in the north and 202 mt contribution in the south is added to the remaining rockfish. The ABC for the remaining species is based on historical data from a 1996 review landings and includes an estimate of recreational landings. Most of these species have never been assessed quantitatively.

[ii] Longnose skate was fully assessed in 2006 and an assessment update was completed in 2007. The ABC of 3,428 is based on the 2007 with an F_{MSY} proxy of $F_{45\%}$. Longnose skate was previously managed as part of the Other Fish complex. The 2009 OY of 1,349 mt is a precautionary OY based on historical total catch increased by 50 percent.

[jj] ''Other fish'' includes sharks, skates, rays, ratfish, morids, grenadiers, kelp greenling, and other groundfish species noted above in footnote d/. The longnose skate contribution is being removed from this complex.

[kk] Sablefish allocation north of 36° N. lat.—The limited entry allocation is further

divided with 58 percent allocated to the trawl fishery and 42 percent allocated to the fixed-gear fishery.

[ll] Specific open access/limited entry allocations specified in the FMP have been suspended during the rebuilding period as necessary to meet the overall rebuilding target while allowing harvest of healthy stocks.

TABLE 2a. TO PART 660, SUBPART G—2010, AND BEYOND, SPECIFICATIONS OF ABCS, OYS, AND HGS, BY MANAGEMENT AREA

[Weights in metric tons]

Species	ABC specifications						OY [b]	HG [b]	
	ABC specifications by area					ABC		Commercial	Recreational
	Vancouver [a]	Columbia	Eureka	Monterey	Conception				
Lingcod [c] N of 42° N. lat									
S of 42° N. lat	4,058		771			4,829	4,829		
Pacific Cod [e]	3,200		([d])			3,200	1,600		
Pacific Whiting [f]	([f])					([f])	134,773–404,318		
Sablefish [g] N of 36° N. lat							5,824		
S of 36° N. lat	9,217					9,217	1,258		
Cabezon [h] S of 42° N. lat	([d])		86		25	111	79		
FLATFISH:									
Dover sole	28,582					28,582	16,500		
English sole [j]	9,745					9,745	9,745		
Petrale sole [k]	1,514		1,237			2,751	2,393		
Arrowtooth flounder [l]	10,112					10,112	10,112		
Starry Flounder [m]	1,578					1,578	1,077		
Other flatfish [n]	6,731					6,731	4,884		
ROCKFISH:									
Pacific Ocean Perch [o]	1,173					1,173	200	198	
Shortbelly [p]	6,950					6,950	6,950		
Widow [q]	6,937					6,937	509	447.4	7.2
Canary [r]	940					940	105	42.3	43.8
Chilipepper [s]	([d])			2,576		2,576	2,447	2,447	
Bocaccio [t]	([d])			793		793	288	206.4	67.3
Splitnose [u]	([d])			615		615	461		
Yellowtail [v]	4,562			([d])		4,562	4,562		
Shortspine thornyhead [w] N of 34°27′ N. lat							1,591	1,591	
S of 34°27′ N. lat	2,411					2,411	410		
Longspine thornyhead [x] N of 34°27′ N. lat							2,175		
S of 34°27′ N. lat	3,671					3,671	385		
Cowcod [y]	([d])			14		14	4		
Darkblotched [z]	440					440	291	288.05	
Yelloweye [aa]						32	17	3.1	8.0
California Scorpionfish [bb]					155	155	155		
Black [cc] N of 46°16′ N. lat	464					464	464		
S of 46°16′ N. lat			1,317			1,317	1,000		

TABLE 2a. TO PART 660, SUBPART G—2010, AND BEYOND, SPECIFICATIONS OF ABCS, OYS, AND HGS, BY MANAGEMENT AREA—Continued

[Weights in metric tons]

Species	ABC specifications						OY [b]	HG [b]	
	ABC specifications by area					ABC		Commercial	Recreational
	Vancouver [a]	Columbia	Eureka	Monterey	Conception				
Minor Rockfish [dd] N of 40°10′ N. lat	3,678					3,678	2,283		
Minor Rockfish [ee] S of 40°10′ N. lat				3,384		3,384	1,990		
Remaining	1,640			1,318					
Bank [ff]	([d])			350					
Blackgill [gg]	([d])			292					
Blue	28			213					
Bocaccio north	318								
Chilipepper north	32								
Redstripe	576			([d])					
Sharpchin	307			45					
Silvergrey	38			([d])					
Splitnose north	242								
Yellowmouth	99			([d])					
Yellowtail				116					
Gopher	([d])			302					
Other rockfish [hh]	2,038			2,066					
SHARKS/SKATES/RATFISH/MORIDS/GRENADIERS/KELP GREENLING:									
Longnose Skate [ii]	3,269					3,269	1,349		
Other fish [jj]	11,200					11,200	5,600		

TABLE 2b. TO PART 660, SUBPART G—2008, HARVEST GUIDELINES FOR MINOR ROCKFISH BY DEPTH SUB-GROUPS

[Weights in metric tons]

Species	Total catch ABC	Total catch OY	Recreational HG	Commercial HG	Limited entry HG		Open access HG	
					Mt	%	Mt	%
Minor Rockfish [dd] N of 40°10′ N. lat	3,678	2,283				91.7		8.3
Nearshore		155						
Shelf		968						
Slope		1,160						
Minor Rockfish [ee] S of 40°10′ N. lat	3,382	1,990				55.7		44.3
Nearshore		650						
Shelf		714						
Slope		626						

TABLE 2c. TO PART 660, SUBPART G—2008, OPEN ACCESS AND LIMITED ENTRY ALLOCATIONS BY SPECIES OR SPECIES GROUP

[Weights in metric tons]

Species	Commercial total catch HGs	Commercial total catch HGs			
		Limited entry		Open access	
		Mt	%	Mt	%
Lingcod:					

TABLE 2c. TO PART 660, SUBPART G—2008, OPEN ACCESS AND LIMITED ENTRY ALLOCATIONS BY SPECIES OR SPECIES GROUP—Continued

[Weights in metric tons]

Species	Commercial total catch HGs	Commercial total catch HGs			
		Limited entry		Open access	
		Mt	%	Mt	%
N of 42° N. lat.					
S of 42° N. lat			81.0		19.0
Sablefish [kk] N of 36° N. lat	5,824	5,276	90.6	548	9.4
Widow [ll]			97.0		3.0
Canary [ll]	42.3		87.7		12.3
Chilipepper	2,447	1,363	55.7	1,084	44.3
Bocaccio [ll]	206.4		55.7		44.3
Yellowtail			91.7		8.3
Shortspine thornyhead N of 34°27′ N. lat	1,591	1,586	99.7	5	0.27
Minor Rockfish: N of 40°10′ N. lat			91.7		8.3
S of 40°10′ N. lat			55.7		44.3

[a] ABCs apply only to the U.S. portion of the Vancouver area.

[b] Optimum Yields (OYs) and Harvest Guidelines (HGs) are specified as total catch values. A harvest guideline is a specified harvest target and not a quota. The use of this term may differ from the use of similar terms in state regulation.

[c] Lingcod—A coastwide lingcod stock assessment was prepared in 2005. The lingcod biomass was estimated to be at 64 percent of its unfished biomass coastwide in 2005. The ABC of 5,278 mt was calculated using an F_{MSY} proxy of $F_{45\%}$. Because the stock is above $B_{40\%}$ coastwide, the coastwide OY was set equal to the ABC. The tribal harvest guideline is 250 mt.

[d] ''Other species''—these species are neither common nor important to the commercial and recreational fisheries in the areas footnoted. Accordingly, these species are included in the harvest guidelines of ''other fish'', ''other rockfish'' or ''remaining rockfish''.

[e] Pacific Cod—The 3,200 mt ABC for the Vancouver-Columbia area is based on historical landings data. The 1,600 mt OY is the ABC reduced by 50 percent as a precautionary adjustment. A tribal harvest guideline of 400 mt is deducted from the OY resulting in a commercial OY of 1,200 mt.

[f] Pacific whiting—Pacific whiting—The most recent stock assessment was prepared in February 2008. The stock assessment base model estimated the Pacific whiting biomass to be at 42.6 percent (50th percentile estimate of depletion) of its unfished biomass in 2008. Final adoption of the Pacific whiting ABC and OY have been deferred until the Council's March 2009 meeting. Therefore, table 1a does not contain an ABC value, but does contain the OY range considered in the DEIS. It is anticipated that a new assessment will be available in early 2010 and the results will be used to set the 2010 ABC and OY. The final ABC and OY will be published as a separate action following the Council's recommendation at its March 2010 meeting.

[g] Sablefish—A coastwide sablefish stock assessment was prepared in 2007. The coastwide sablefish biomass was estimated to be at 38.3 percent of its unfished biomass in 2007. The coastwide ABC of 9,914 mt was based on the new stock assessment with a F_{MSY} proxy of $F_{45\%}$. The 40–10 harvest policy was applied to the ABC then apportioned between the northern and southern areas with 72 percent going to the area north of 36° N. lat. and 28 percent going to the area south of 36° N. lat. The OY for the area north of 36° N. lat. is 6,471 mt. When establishing the OY for the area south of 36° N. lat. a 50 percent reduction was made resulting in a Conception area OY of 1,258 mt. The OY for the area north of 36° N. lat. is 5,824 mt. The Coastwide OY of 7,729 mt is the sum of the northern and southern area OYs. The tribal allocation for the area north of 36° N. lat. is 647 mt (10 percent of the OY north of 36° N. lat.), which is further reduced by 1.6 percent (10 mt) to account for discard mortality. The tribal landed catch value is 637 mt.

[h] Cabezon south of 42° N. lat. was assessed in 2005. The Cabezon stock was estimated to be at 40 percent of its unfished biomass north of 34° 27′ N. lat. and 28 percent of its unfished biomass south of 34° 27′ N. lat. in 2005. The ABC of 106 mt is based on the 2005 stock assessment with a harvest rate proxy of $F_{45\%}$. The OY of 79 mt is consistent with the application of a 60–20 harvest rate policy specified in the California Nearshore Management Plan.

[i] Dover sole north of 34° 27′ N. lat. was assessed in 2005. The Dover sole biomass was estimated to be at 59.8 percent of its unfished biomass in 2005 and was projected to be increasing. The ABC of 29,453 mt is based on the results of the 2005 assessment with an F_{MSY} proxy of $F_{40\%}$. Because the stock is above $B_{40\%}$ coastwide, the OY could be set equal to the ABC. The OY of 16,500 mt is less than the ABC. The OY is set at the MSY harvest level which is considerably larger than the coastwide catches in any recent years.

[j] A coastwide English sole stock assessment was prepared in 2005 and updated in 2007. The stock was estimated to be at 116 percent of its unfished biomass in 2007. The stock biomass is believed to be declining. The ABC of 9,745 mt is based on the results of the 2007 assessment update with an F_{MSY} proxy of $F_{40\%}$. Because the stock is above $B_{40\%}$, the OY was set equal to the ABC.

[k] A petrale sole stock assessment was prepared for 2005. In 2005 the petrale sole stock was estimated to be at 32 percent of its unfished biomass coastwide (34 percent in the northern assessment area and 29 percent in the southern assessment area). The ABC of 2,751 mt is based on the 2005 assessment with a $F_{40\%}$ F_{MSY} proxy. To derive the OY, the 40–10 harvest policy was applied to the ABC for both the northern and southern assessment areas. As a precautionary measure, an additional 25 percent reduction was made in the OY contribution for the southern area due to assessment uncertainty. The coastwide OY is 2,393 mt in 2010.

[l] Arrowtooth flounder was assessed in 2007 and was estimated to be at 79 percent of its unfished biomass in 2007. Because the stock is above $B_{40\%}$, the OY is set equal to the ABC.

[m] Starry Flounder was assessed for the first time in 2005 and was estimated to be above 40 percent of its unfished biomass in 2005. However, the stock was projected to decline below 40 percent in both the northern and southern areas after 2008. For 2010, the coastwide ABC of 1,578 mt is based on the 2005 assessment with a F_{MSY} proxy of $F_{40\%}$. To derive the OY of 1,077 mt, the 40–10 harvest policy was applied to the ABC for both the northern and southern assessment areas then an additional 25 percent reduction was made due to assessment uncertainty.

[n] ''Other flatfish'' are those flatfish species that do not have individual ABC/OYs and include butter sole, curlfin sole, flathead sole, Pacific sand dab, rex sole, rock sole, and sand sole. The other flatfish ABC is based on historical catch levels. The ABC of 6,731 mt is based on the highest landings for sanddabs (1995) and rex sole (1982) for the 1981–2003 period and on the average landings from the 1994–1998 period for the remaining other flatfish species. The OY of 4,884 mt is based on the ABC with a 25 percent precautionary adjustment for sanddabs and rex sole and a 50 percent precautionary adjustment for the remaining species.

[o] A POP stock assessment was prepared in 2005 and was updated in 2007. The stock assessment update estimated the stock to be at 27.5 percent of its unfished biomass in 2007. The ABC of 1,160 mt for the Vancouver and Columbia areas is based on the 2007 stock assessment update with an F_{MSY} proxy of $F_{50\%}$. The OY of 200 mt is based on a rebuilding plan with a target year to rebuild of 2017 and an SPR harvest rate of 86.4 percent. The OY is reduced by 2.0 mt for the amount anticipated to be taken during research activity and 0.14 mt for the amount expected to be taken during EFP fishing.

[p] Shortbelly rockfish remains an unexploited stock and is difficult to assess quantitatively. To understand the potential environmental determinants of fluctuations in the recruitment and abundance of an unexploited rockfish population in the California Current ecosystem, a non-quantitative assessment was conducted in 2007. The results of the assessment indicated the shortbelly stock was healthy with an estimated spawning stock biomass at 67 percent of its unfished biomass in 2005. The ABC and OY are being set at 6,950 mt which is 50 percent of the 2008 ABC and OY values. The stock is expected to remain at its current equilibrium with these harvest specifications.

[q] Widow rockfish was assessed in 2005 and an update was prepared in 2007. The stock assessment update estimated the stock to be at 36.2 percent of its unfished biomass in 2006. The ABC of 6,937 mt is based on the stock assessment update with an $F_{50\%}$ F_{MSY} proxy. The OY of 509 is based on a rebuilding plan with a target year to rebuild of 2015 and an SPR harvest rate or 95 percent. To derive the commercial harvest guideline of 447.4 mt the OY is reduced by 1.1 mt for the amount anticipated to be taken during research activity, 45.5 mt for the tribal set-aside, 7.2 mt the amount estimated to be taken in the recreational fisheries, 0.4 mt for the amount expected to be taken incidentally in non-groundfish fisheries, and 7.4 mt for EFP fishing activities. The following sector specific bycatch limits will be established for the Pacific whiting fishery: 153.0 mt for catcher/processors, 108.0 mt for motherships, and 189.0 mt for shore-based.

[r] Canary rockfish—A canary rockfish stock assessment was completed in 2007 and the stock was estimated to be at 32.7 percent of its unfished biomass coastwide in 2007. The coastwide ABC of 940 mt is based on a F_{MSY} proxy of $F_{50\%}$. The OY of 105 mt is based on a rebuilding plan with a target year to rebuild of 2021 and a SPR harvest rate of 88.7 percent. To derive the commercial harvest guideline of 42.3 mt, the OY is reduced by 8.0 mt for the amount anticipated to be taken during research activity, 7.3 mt the tribal set-aside, 43.8 mt the amount estimated to be taken in the recreational fisheries, 0.9 mt for the amount expected to be taken incidentally in non-groundfish fisheries, and 2.7 mt for the amount expected to be taken during EFP fishing. The following harvest guidelines are being specified for catch sharing in 2009: 19.7 mt for limited entry Non-Whiting Trawl, 18.0 mt for limited entry Whiting Trawl, 2.2 mt for limited entry fixed gear, 2.5 mt for directed open access, 4.9 mt for Washington recreational, 16.0 mt for Oregon recreational, and 22.9 mt for California recreational.

[s] Chilipepper rockfish was assessed in 2007 and the stock was estimated to be at 71 percent of its unfished biomass coastwide in 2007. The ABC of 2,576 mt is based on the new assessment with an F_{MSY} proxy of $F_{50\%}$. Because the unfished biomass is estimated to be above 40 percent the unfished biomass, the default OY could be set equal to the ABC. However, the OY of 2,447 mt was the ABC reduced by 5 percent as a precautionary measure. Open access is allocated 44.3 percent (1,084 mt) of the commercial HG and limited entry is allocated 55.7 percent (1,363 mt) of the commercial HG.

[t] A bocaccio stock assessment and a rebuilding analysis were prepared in 2007. The bocaccio stock was estimated to be at 13.8 percent of its unfished biomass in 2007. The ABC of 793 mt for the Monterey-Conception area is based on the new stock assessment with an F_{MSY} proxy of $F_{50\%}$. The OY of 288 is based on a rebuilding plan with a target year to rebuild of 2026 and a SPR harvest rate of 77.7 percent. To derive the commercial harvest guideline of 206.4 mt, the OY is reduced by 2.0 mt for the amount anticipated to be taken during research activity, 67.3 mt for the amount estimated to be taken in the recreational fisheries, 1.3 mt for the amount expected to be taken incidentally in non-groundfish fisheries, and 11.0 mt for the amount expected to be taken during EFP fishing.

[u] Splitnose rockfish—The ABC is 615 mt in the Monterey-Conception area. The 461 mt OY for the area reflects a 25 percent precautionary adjustment because of the less rigorous stock assessment for this stock. In the north (Vancouver, Columbia and Eureka areas), splitnose is included within the minor slope rockfish OY. Because the harvest assumptions used to forecast future harvest were likely overestimates, carrying the previously used ABCs and OYs forward into 2010 was considered to be conservative and based on the best available data.

[v] Yellowtail rockfish—A yellowtail rockfish stock assessment was prepared in 2005 for the Vancouver, Columbia, Eureka areas. Yellowtail rockfish was estimated to be above 40 percent of its unfished biomass in 2005. The ABC of 4,562 mt is based on the 2005 stock assessment with the F_{MSY} proxy of $F_{50\%}$. The OY of 4,562 mt was set equal to the ABC, because the stock is above the precautionary threshold of $B_{40\%}$.

[w] Shortspine thornyhead was assessed in 2005 and the stock was estimated to be at 63 percent of its unfished biomass in 2005. The ABC of 2,411 mt is based on a $F_{50\%}$ F_{MSY} proxy. For that portion of the stock (66 percent of the biomass) north of Point Conception (34°27′ N. lat.), the OY of 1,591 mt was set at equal to the ABC because the stock is estimated to be above the precautionary threshold. For that portion of the stock south of 34°27′ N. lat. (34 percent of the biomass), the OY of 410 mt was the portion of the ABC for the area reduced by 50 percent as a precautionary adjustment due to the short duration and amount of survey data for that area.

[x] Longspine thornyhead was assessed coastwide in 2005 and the stock was estimated to be at 71 percent of its unfished biomass in 2005. The coastwide ABC of 3,671 mt is based on a $F_{50\%}$ F_{MSY} proxy. The OY is set equal to the ABC because the stock is above the precautionary threshold. Separate OYs are being established for the areas north and south of 34°27′ N. lat. (Point Conception). The OY of 2,175 mt for that portion of the stock in the northern area (79 percent) was the ABC reduced by 25 percent as a precautionary adjustment. For that portion of the stock in the southern area (21 percent), the OY of 385 mt was the portion of the ABC for the area reduced by 50 percent as a precautionary adjustment due to the short duration and amount of survey data for that area.

[y] Cowcod in the Conception area was assessed in 2007 and the stock was estimated to be between 3.4 to 16.3 percent of its unfished biomass. The ABC for the Monterey and Conception areas is 14 mt and is based on the 2007 rebuilding analysis in which the Conception area stock assessment projection was doubled to account for both areas. A single OY of 4 mt is being set for both areas. The OY of 4 mt is based on a rebuilding plan with a target year to rebuild of 2072 and an SPR rate of 82.1 percent. The amount anticipated to be taken during research activity is 0.2 mt and the amount expected to be taken during EFP activity is 0.24 mt.

[z] Darkblotched rockfish was assessed in 2007 and a rebuilding analysis was prepared. The new stock assessment estimated the stock to be at 22.4 percent of its unfished biomass in 2007. The ABC is projected to be 440 mt and is based on the 2007 stock assessment with an F_{MSY} proxy of $F_{50\%}$. The OY of 291 mt is based on a rebuilding plan with a target year to rebuild of 2028 and an SPR harvest rate of 62.1 percent. The commercial OY of 288.05 is the OY reduced by 2.0 mt for the amount anticipated to be taken during research activity and 0.95 mt for

the amount projected to be taken during EFP activity.

[aa] Yelloweye rockfish was fully assessed in 2006 and an assessment update was completed in 2007. The 2007 stock assessment update estimated the spawning stock biomass in 2006 to be at 14 percent of its unfished biomass coastwide. The 31 mt coastwide ABC was derived from the base model in the new stock assessment with an F_{MSY} proxy of $F_{50\%}$. The 17 mt OY is based on a rebuilding plan with a target year to rebuild of 2084 and an SPR harvest rate of 66.3 percent in 2009 and 2010 and an SPR harvest rate of 71.9 percent for 2011 and beyond. The OY is reduced by 2.8 mt for the amount anticipated to be taken during research activity, 2.3 mt the amount estimated to be taken in the tribal fisheries and 0.3 mt for the amount expected to be taken incidentally in non-groundfish fisheries. The catch sharing harvest guidelines for yelloweye rockfish in 2009 and 2010 are: Limited entry non whiting trawl 0.6 mt, limited entry whiting 0.0 mt, limited entry fixed gear 1.4 mt, directed open access 1.1 mt, Washington recreational 2.7 mt, Oregon recreational 2.4 mt, California recreational 2.7 mt, and 0.3 mt for exempted fishing.

[bb] California Scorpionfish south of 34°27′ N. lat. (point Conception) was assessed in 2005 and was estimated to be above 40 percent of its unfished biomass in 2005. The ABC of 155 mt is based on the new assessment with a harvest rate proxy of $F_{50\%}$. Because the stock is above $B_{40\%}$ coastwide, the OY is set equal to the ABC.

[cc] New assessments were prepared for black rockfish south of 45° 56.00 N. lat. (Cape Falcon, Oregon) and for black rockfish north of Cape Falcon. The ABC for the area north of 46° 16′ N. lat. (Washington) is 464 mt (97 percent) of the 478 mt ABC contribution from the northern assessment area. The ABC for the area south of 46° 16′ N. lat. (Oregon and California) is 1,317 mt which is the sum of a contribution of 14 mt (3 percent) from the northern area assessment, and 1,303 mt from the southern area assessment. The ABCs were derived using an F_{MSY} proxy of $F_{50\%}$. Because both portions of the stock are above 40 percent, the OYs could be set equal to the ABCs. For the area north of 46°16′ N. lat., the OY of 490 mt is set equal to the ABC. The following tribal harvest guidelines are being set: 20,000 lb (9.1 mt) north of Cape Alava, WA (48°09.50′ N. lat.) and 10,000 lb (4.5 mt) between Destruction Island, WA (47°40′ N. lat.) and Leadbetter Point, WA (46°38.17′ N. lat.) For the area south of 46°16′ N. lat., the OY of 1,000 mt is a constant harvest level. The black rockfish OY in the area south of 46°16′ N. lat., is subdivided with separate HGs being set for the area north of 42° N. lat. (580 mt/58 percent) and for the area south of 42° N. lat. (420 mt/42 percent).

[dd] Minor rockfish north includes the ''remaining rockfish'' and ''other rockfish'' categories in the Vancouver, Columbia, and Eureka areas combined. These species include ''remaining rockfish'', which generally includes species that have been assessed by less rigorous methods than stock assessments, and ''other rockfish'', which includes species that do not have quantifiable stock assessments. Blue rockfish has been removed from the ''other rockfish'' and added to the remaining rockfish. The ABC of 3,678 mt is the sum of the individual ''remaining rockfish'' ABCs plus the ''other rockfish'' ABCs. The remaining rockfish ABCs continue to be reduced by 25 percent (F = 0.75M) as a precautionary adjustment. To obtain the total catch OY of 2,283 mt, the remaining rockfish ABCs were further reduced by 25 percent and other rockfish ABCs were reduced by 50 percent. This was a precautionary measure to address limited stock assessment information.

[ee] Minor rockfish south includes the ''remaining rockfish'' and ''other rockfish'' categories in the Monterey and Conception areas combined. These species include ''remaining rockfish'' which generally includes species that have been assessed by less rigorous methods than stock assessment, and ''other rockfish'' which includes species that do not have quantifiable stock assessments. Blue rockfish has been removed from the ''other rockfish'' and added to the remaining rockfish. The ABC of 3,382 mt is the sum of the individual ''remaining rockfish'' ABCs plus the ''other rockfish'' ABCs. The remaining rockfish ABCs continue to be reduced by 25 percent (F = 0.75M) as a precautionary adjustment. The remaining rockfish ABCs are further reduced by 25 percent, with the exception of blackgill rockfish (see footnote gg). The other rockfish ABCs were reduced by 50 percent. This was a precautionary measure due to limited stock assessment information. The resulting minor rockfish OY is 1,990 mt.

[ff] Bank rockfish—The ABC is 350 mt which is based on a 2000 stock assessment for the Monterey and Conception areas. This stock contributes 263 mt towards the minor rockfish OY in the south.

[gg] Blackgill rockfish in the Monterey and Conception areas was assessed in 2005 and is estimated to be at 49.9 percent of its unfished biomass in 2008. The ABC of 292 mt for the Monterey and Conception areas is based on the 2005 stock assessment with an F_{MSY} proxy of $F_{50\%}$ and is the two year average ABC for the 2007 and 2008 periods. This stock contributes 292 mt towards minor rockfish south.

[hh] ''Other rockfish'' includes rockfish species listed in 50 CFR 660.302. A new stock assessment was conducted for blue rockfish in 2007. As a result of the new stock assessment, the blue rockfish contribution to the other rockfish group is of 232 mt in the north and 30 mt in the south are removed. A new contribution of 28 mt contribution in the north and 202 mt contribution in the south is added to the remaining rockfish. The ABC for the remaining species is based on historical data from a 1996 review landings and includes an estimate of recreational landings. Most of these species have never been assessed quantitatively.

[ii] Longnose skate was fully assessed in 2006 and an assessment update was completed in 2007. The ABC of 3,428 is based on the 2007 with an F_{MSY} proxy of $F_{45\%}$. Longnose skate was previously managed as part of the Other Fish complex. The 2009 OY of 1,349 mt is a precautionary OY based on historical total catch increased by 50 percent.

[jj] ''Other fish'' includes sharks, skates, rays, ratfish, morids, grenadiers, kelp greenling, and other groundfish species noted above in footnote d. The longnose skate contribution is being removed from this complex.

[kk] Sablefish allocation north of 36° N. lat.—The limited entry allocation is further divided with 58 percent allocated to the trawl fishery and 42 percent allocated to the fixed-gear fishery.

[ll] Specific open access/limited entry allocations specified in the FMP have been suspended during the rebuilding period as necessary to meet the overall rebuilding target while allowing harvest of healthy stocks.

BILLING CODE 3510–2–P

Table 3 (North) to Part 660, Subpart G -- 2009-2010 Trip Limits for Limited Entry Trawl Gear North of 40°10' N. Lat.

Other Limits and Requirements Apply – Read § 660.301 - § 660.399 before using this table 111208

		JAN-FEB	MAR-APR	MAY-JUN	JUL-AUG	SEP-OCT	NOV-DEC
	Rockfish Conservation Area (RCA)[6/]:						
1	North of 48°10' N. lat.	shore - modified 200 fm [7/]	shore - 200 fm	shore - 150 fm		shore - 200 fm	shore - modified 200 fm [7/]
2	48°10' N. lat. - 45°46' N. lat.	75 fm - modified 200 fm [7/]	75 fm - 200 fm	75 fm - 150 fm		75 fm - 200 fm	75 fm - modified 200 fm [7/]
3	45°46' N. lat. - 40°10' N. lat.			75 fm - 200 fm			
	Selective flatfish trawl gear is required shoreward of the RCA; all trawl gear (large footrope, selective flatfish trawl, and small footrope trawl gear) is permitted seaward of the RCA. Large footrope and small footrope trawl gears (except for selective flatfish trawl gear) are prohibited shoreward of the RCA. Midwater trawl gear is permitted only for vessels participating in the primary whiting season.						
	See § 660.370 and § 660.381 for Additional Gear, Trip Limit, and Conservation Area Requirements and Restrictions. See §§ 660.390-660.394 and §§ 660.396-660.399 for Conservation Area Descriptions and Coordinates (including RCAs, YRCA, CCAs, Farallon Islands, Cordell Banks, and EFHCAs).						
	State trip limits and seasons may be more restrictive than federal trip limits, particularly in waters off Oregon and California.						
4	**Minor slope rockfish[2/] & Darkblotched rockfish**	1,500 lb/ 2 months					
5	**Pacific ocean perch**	1,500 lb/ 2 months					
6	**DTS complex**						
7	Sablefish						
8	large & small footrope gear	18,000 lb/ 2 months		22,000 lb/ 2 months			18,000 lb/ 2 months
9	selective flatfish trawl gear	5,000 lb/ 2 months	7,500 lb/ 2months				5,000 lb/ 2 months
10	multiple bottom trawl gear [8/]	5,000 lb/ 2 months	7,500 lb/ 2months				5,000 lb/ 2 months
11	Longspine thornyhead						
12	large & small footrope gear	22,000 lb/ 2 months					
13	selective flatfish trawl gear	3,000 lb/ 2 months	5,000 lb/ 2 months				3,000 lb/ 2 months
14	multiple bottom trawl gear [8/]	3,000 lb/ 2 months	5,000 lb/ 2 months				3,000 lb/ 2 months
15	Shortspine thornyhead						
16	large & small footrope gear	17,000 lb/2 months					
17	selective flatfish trawl gear	3,000 lb/ 2 months					
18	multiple bottom trawl gear [8/]	3,000 lb/ 2 months					
19	Dover sole						
20	large & small footrope gear	110,000 lb/ 2 months					
21	selective flatfish trawl gear	40,000 lb/ 2 months	45,000 lb/ 2 months				40,000 lb/ 2 months
22	multiple bottom trawl gear [8/]	40,000 lb/ 2 months	45,000 lb/ 2 months				40,000 lb/ 2 months

TABLE 3 (North)

Table 3 (North). Continued

23	**Whiting**				
24	midwater trawl	Before the primary whiting season: CLOSED. – During the primary season: mid-water trawl permitted in the RCA. See §660.373 for season and trip limit details. – After the primary whiting season: CLOSED.			
25	large & small footrope gear	Before the primary whiting season: 20,000 lb/trip. -- During the primary season: 10,000 lb/trip. -- After the primary whiting season: 10,000 lb/trip.			
26	**Flatfish** (except Dover sole)				
27	Arrowtooth flounder				
28	large & small footrope gear	150,000 lb/ 2 months			
29	selective flatfish trawl gear	90,000 lb/ 2 months			
30	multiple bottom trawl gear [8/]	90,000 lb/ 2 months			
31	Other flatfish [3/], English sole, starry flounder, & Petrale sole				
32	large & small footrope gear for Other flatfish [3/], English sole, & s tarry flounder	110,000 lb/ 2 months	110,000 lb/ 2 months, no more than 25,000 lb/ 2 months of which may be petrale sole.	110,000 lb/ 2 months, no more than 30,000 lb/ 2 months of which may be petrale sole.	110,000 lb/ 2 months
33	large & small footrope gear for Petrale sole	25,000 lb/ 2 months			40,000 lb/ 2 months
34	selective flatfish trawl gear for Other flatfish [3/], English sole, & starry flounder	90,000 lb/ 2 months, no more than 16,000 lb/ 2 months of which may be petrale sole.	90,000 lb/ 2 months, no more than 18,000 lb/ 2 months of which may be petrale sole.		90,000 lb/ 2 months, no more than 16,000 lb/ 2 months of which may be petrale sole.
35	selective flatfish trawl gear for Petrale sole				
36	multiple bottom trawl gear [8/]	90,000 lb/ 2 months, no more than 16,000 lb/ 2 months of which may be petrale sole.	90,000 lb/ 2 months, no more than 18,000 lb/ 2 months of which may be petrale sole.		90,000 lb/ 2 months, no more than 16,000 lb/ 2 months of which may be petrale sole.
37	**Minor shelf rockfish [1/], Shortbelly, Widow & Yelloweye rockfish**				
38	midwater trawl for Widow rockfish	Before the primary whiting season: CLOSED. – During primary whiting season: In trips of at least 10,000 lb of whiting, combined widow and yellowtail limit of 500 lb/ trip, cumulative widow limit of 1,500 lb/ month. Mid-water trawl permitted in the RCA. See §660.373 for primary whiting season and trip limit details. -- After the primary whiting season: CLOSED.			
39	large & small footrope gear	300 lb/ 2 months			
40	selective flatfish trawl gear	300 lb/ month		1,000 lb/ month, no more than 200 lb/ month of which may be yelloweye rockfish	300 lb/ month
41	multiple bottom trawl gear [8/]	300 lb/ month		300 lb/ 2 months, no more than 200 lb/ month of which may be yelloweye rockfish	300 lb/ month

TABLE 3 (North) con't

Table 3 (North). Continued

42	**Canary rockfish**				
43	large & small footrope gear	CLOSED			
44	selective flatfish trawl gear	100 lb/ month	300 lb/ month	100 lb/ month	
45	multiple bottom trawl gear [8/]	CLOSED			
46	**Yellowtail**				
47	midwater trawl	Before the primary whiting season: CLOSED. -- During primary whiting season: In trips of at least 10,000 lb of whiting: combined widow and yellowtail limit of 500 lb/ trip, cumulative yellowtail limit of 2,000 lb/ month. Mid-water trawl permitted in the RCA. See §660.373 for primary whiting season and trip limit details. -- After the primary whiting season: CLOSED.			
48	large & small footrope gear	300 lb/ 2 months			
49	selective flatfish trawl gear	2,000 lb/ 2 months			
50	multiple bottom trawl gear [8/]	300 lb/ 2 months			
51	**Minor nearshore rockfish & Black rockfish**				
52	large & small footrope gear	CLOSED			
53	selective flatfish trawl gear	300 lb/ month			
54	multiple bottom trawl gear [8/]	CLOSED			
55	**Lingcod** [4/]				
56	large & small footrope gear	1,200 lb/ 2 months	4,000 lb/ 2 months		
57	selective flatfish trawl gear		1,200 lb/2 months		
58	multiple bottom trawl gear [8/]				
59	**Pacific cod**	30,000 lb/ 2 months	70,000 lb/ 2 months		30,000 lb/ 2 months
60	**Spiny dogfish**	200,000 lb/ 2 months	150,000 lb/ 2 months	100,000 lb/ 2 months	
61	**Other Fish** [5/]	Not limited			

TABLE 3 (North) con't

1/ Bocaccio, chilipepper and cowcod are included in the trip limits for minor shelf rockfish.
2/ Splitnose rockfish is included in the trip limits for minor slope rockfish.
3/ "Other flatfish" are defined at § 660.302 and include butter sole, curlfin sole, flathead sole, Pacific sanddab, rex sole, rock sole, and sand sole.
4/ The minimum size limit for lingcod is 22 inches (56 cm) total length North of 42° N. lat.
5/ "Other fish" are defined at § 660.302 and include sharks, skates (including longnose skate), ratfish, morids, grenadiers, and kelp greenling. Cabezon is included in the trip limits for "other fish."
6/ The Rockfish Conservation Area is a gear and/or sector specific closed area generally described by depth contours but specifically defined by lat/long coordinates set out at §§ 660.391-660.394.
7/ The "modified" fathom lines are modified to exclude certain petrale sole areas from the RCA.
8/ If a vessel has both selective flatfish gear and large or small footrope gear on board during a cumulative limit period (either simultaneously or successively), the most restrictive cumulative limit for any gear on board during the cumulative limit period applies for the entire cumulative limit period.

To convert pounds to kilograms, divide by 2.20462, the number of pounds in one kilogram.

Table 3 (South) to Part 660, Subpart G -- 2009-2010 Trip Limits for Limited Entry Trawl Gear South of 40°10' N. Lat.

Other Limits and Requirements Apply -- Read § 660.301 - § 660.399 before using this table

111208

		JAN-FEB	MAR-APR	MAY-JUN	JUL-AUG	SEP-OCT	NOV-DEC
	Rockfish Conservation Area (RCA)[6/]:						
1	South of 40°10' N. lat.	100 fm - 150 fm[7/]					
	All trawl gear (large footrope, selective flatfish trawl, midwater trawl, and small footrope trawl gear) is permitted seaward of the RCA. Large footrope trawl gear and midwater trawl gear are prohibited shoreward of the RCA.						
	See § 660.370 and § 660.381 for Additional Gear, Trip Limit, and Conservation Area Requirements and Restrictions. See §§ 660.390-660.394 and §§ 660.396-660.399 for Conservation Area Descriptions and Coordinates (including RCAs, YRCA, CCAs, Farallon Islands, Cordell Banks, and EFHCAs).						
	State trip limits and seasons may be more restrictive than federal trip limits, particularly in waters off Oregon and California.						
2	**Minor slope rockfish[2/] & Darkblotched rockfish**						
3	40°10' - 38° N. lat.	15,000 lb/ 2 months			10,000 lb/ 2 months		15,000 lb/ 2 months
4	South of 38° N. lat.	55,000 lb/ 2 months					
5	**Splitnose**						
6	40°10' - 38° N. lat.	15,000 lb/ 2 months			10,000 lb/ 2 months		15,000 lb/ 2 months
7	South of 38° N. lat.	55,000 lb/ 2 months					
8	**DTS complex**						
9	Sablefish	20,000 lb/ 2 months					
10	Longspine thornyhead	22,000 lb/ 2 months					
11	Shortspine thornyhead	17,000 lb/ 2 months					
12	Dover sole	110,000 lb/ 2 months					
13	**Flatfish** (except Dover sole)						
14	Other flatfish[3/], English sole, & starry flounder	110,000 lb/ 2 months	110,000 lb/ 2 months, no more than 30,000 lb/ 2 months of which may be petrale sole.				110,000 lb/ 2 months
15	Petrale sole	50,000 lb/ 2 months					50,000 lb/ 2 months
16	Arrowtooth flounder	10,000 lb/ 2 months					
17	**Whiting**						
18	midwater trawl	Before the primary whiting season: CLOSED. -- During the primary season: mid-water trawl permitted in the RCA. See §660.373 for season and trip limit details. -- After the primary whiting season: CLOSED.					
19	large & small footrope gear	Before the primary whiting season: 20,000 lb/trip. -- During the primary season: 10,000 lb/trip. -- After the primary whiting season: 10,000 lb/trip.					

TABLE 3 (South)

Table 3 (South). Continued

20	**Minor shelf rockfish[1/], Chilipepper, Shortbelly, Widow, & Yelloweye rockfish**				
21	large footrope or midwater trawl for Minor shelf rockfish & Shortbelly	300 lb/ month			
22	large footrope or midwater trawl for Chilipepper	5,000 lb/ 2 months			
23	large footrope or midwater trawl for Widow & Yelloweye	CLOSED			
24	small footrope trawl for Minor Shelf, Shortbelly, Widow & Yelloweye	300 lb/ month			
25	small footrope trawl for Chilipepper	5,000 lb/ 2 months			
26	**Bocaccio**				
27	large footrope or midwater trawl	300 lb/ 2 months			
28	small footrope trawl	CLOSED			
29	**Canary rockfish**				
30	large footrope or midwater trawl	CLOSED			
31	small footrope trawl	100 lb/ month	300 lb/ month	100 lb/ month	
32	**Cowcod**	CLOSED			
33	**Minor nearshore rockfish & Black rockfish**				
34	large footrope or midwater trawl	CLOSED			
35	small footrope trawl	300 lb/ month			
36	**Lingcod[4/]**				
37	large footrope or midwater trawl	1,200 lb/ 2 months	4,000 lb/ 2 months		
38	small footrope trawl		1,200 lb/ 2 months		
39	**Pacific cod**	30,000 lb/ 2 months	70,000 lb/ 2 months		30,000 lb/ 2 months
40	**Spiny dogfish**	200,000 lb/ 2 months	150,000 lb/ 2 months	100,000 lb/ 2 months	
41	**Other Fish[5/] & Cabezon**	Not limited			

TABLE 3 (South) con't

1/ Yellowtail is included in the trip limits for minor shelf rockfish.
2/ POP is included in the trip limits for minor slope rockfish
3/ "Other flatfish" are defined at § 660.302 and include butter sole, curlfin sole, flathead sole, Pacific sanddab, rex sole, rock sole, and sand sole.
4/ The minimum size limit for lingcod is 24 inches (61 cm) total length South of 42° N. lat.
5/ Other fish are defined at § 660.302 and include sharks, skates (including longnose skate), ratfish, morids, grenadiers, and kelp greenling.
6/ The Rockfish Conservation Area is a gear and/or sector specific closed area generally described by depth contours but specifically defined by lat/long coordinates set out at §§ 660.391-660.394.
7/ South of 34°27' N. lat., the RCA is 100 fm - 150 fm along the mainland coast; shoreline - 150 fm around islands.
To convert pounds to kilograms, divide by 2.20462, the number of pounds in one kilogram.

Table 4 (North) to Part 660, Subpart G -- 2009-2010 Trip Limits for Limited Entry Fixed Gear North of 40°10' N. Lat.

Other Limits and Requirements Apply -- Read § 660.301 - § 660.399 before using this table 111208

		JAN-FEB	MAR-APR	MAY-JUN	JUL-AUG	SEP-OCT	NOV-DEC
	Rockfish Conservation Area (RCA)[6/]:						
1	North of 46°16' N. lat.	shoreline - 100 fm					
2	46o16' N. lat. - 45°03.83' N. lat.	30 fm - 100 fm					
3	45°03.83' N. lat. - 42°50' N. lat.	30 fm - 125 fm [7/]					
4	42°50' N. lat. - 40°10' N. lat.	20 fm - 100 fm					
	See § 660.370 and § 660.382 for Additional Gear, Trip Limit, and Conservation Area Requirements and Restrictions. See §§ 660.390-660.394 and §§ 660.396-660.399 for Conservation Area Descriptions and Coordinates (including RCAs, YRCA, CCAs, Farallon Islands, Cordell Banks, and EFHCAs).						
	State trip limits and seasons may be more restrictive than federal trip limits, particularly in waters off Oregon and California.						
5	**Minor slope rockfish [2/] & Darkblotched rockfish**	4,000 lb/ 2 months					
6	**Pacific ocean perch**	1,800 lb/ 2 months					
7	**Sablefish**	300 lb/ day, or 1 landing per week of up to 1,000 lb, not to exceed 5,000 lb/ 2 months			500 lb/ day, or 1 landing per week of up to 1,000 lb, not to exceed 5,000 lb/ 2 months		
8	**Longspine thornyhead**	10,000 lb/ 2 months					
9	**Shortspine thornyhead**	2,000 lb/ 2 months					
10	**Dover sole**	5,000 lb/ month South of 42° N. lat., when fishing for "other flatfish," vessels using hook-and-line gear with no more than 12 hooks per line, using hooks no larger than "Number 2" hooks, which measure 11 mm (0.44 inches) point to shank, and up to two 1 lb (0.45 kg) weights per line are not subject to the RCAs.					
11	**Arrowtooth flounder**						
12	**Petrale sole**						
13	**English sole**						
14	**Starry flounder**						
15	**Other flatfish [1/]**						
16	**Whiting**	10,000 lb/ trip					
17	**Minor shelf rockfish [2/], Shortbelly, Widow, & Yellowtail rockfish**	200 lb/ month					
18	**Canary rockfish**	CLOSED					
19	**Yelloweye rockfish**	CLOSED					
20	**Minor nearshore rockfish & Black rockfish**						
21	North of 42° N. lat.	5,000 lb/ 2 months, no more than 1,200 lb of which may be species other than black or blue rockfish [3/]					
22	42° - 40°10' N. lat.	6,000 lb/ 2 months, no more than 1,200 lb of which may be species other than black or blue rockfish [3/]					
23	**Lingcod [4/]**	CLOSED		800 lb/ 2 months		400 lb/ month	CLOSED
24	**Pacific cod**	1,000 lb/ 2 months					
25	**Spiny dogfish**	200,000 lb/ 2 months		150,000 lb/ 2 months	100,000 lb/ 2 months		
26	**Other fish [5/]**	Not limited					

TABLE 4 (North)

1/ "Other flatfish" are defined at § 660.302 and include butter sole, curlfin sole, flathead sole, Pacific sanddab, rex sole, rock sole, and sand sole.
2/ Bocaccio, chilipepper and cowcod are included in the trip limits for minor shelf rockfish and splitnose rockfish is included in the trip limits for minor slope rockfish.
3/ For black rockfish north of Cape Alava (48°09.50' N. lat.), and between Destruction Is. (47°40' N. lat.) and Leadbetter Pnt. (46°38.17' N. lat.), there is an additional limit of 100 lb or 30 percent by weight of all fish on board, whichever is greater, per vessel, per fishing trip.
4/ The minimum size limit for lingcod is 22 inches (56 cm) total length North of 42° N. lat. and 24 inches (61 cm) total length South of 42° N. lat.
5/ "Other fish" are defined at § 660.302 and include sharks, skates (including longnose skates), ratfish, morids, grenadiers, and kelp greenling. Cabezon is included in the trip limits for "other fish."
6/ The Rockfish Conservation Area is a gear and/or sector specific closed area generally described by depth contours but specifically defined by lat/long coordinates set out at §§ 660.391-660.394.
7/ The 125 fm restriction is in place all year, except on days when the directed halibut fishery is open. On those days the 100 fm depth restriction is in effect.

To convert pounds to kilograms, divide by 2.20462, the number of pounds in one kilogram.

Table 4 (South) to Part 660, Subpart G -- 2009-2010 Trip Limits for Limited Entry Fixed Gear South of 40°10' N. Lat.

Other Limits and Requirements Apply -- Read § 660.301 - § 660.399 before using this table 111208

		JAN-FEB	MAR-APR	MAY-JUN	JUL-AUG	SEP-OCT	NOV-DEC
	Rockfish Conservation Area (RCA)[5/]:						
1	40°10' - 34°27' N. lat.	30 fm - 150 fm					
2	South of 34°27' N. lat.	60 fm - 150 fm (also applies around islands)					
	See § 660.370 and § 660.382 for Additional Gear, Trip Limit, and Conservation Area Requirements and Restrictions. See §§ 660.390-660.394 and §§ 660.396-660.399 for Conservation Area Descriptions and Coordinates (including RCAs, YRCA, CCAs, Farallon Islands, Cordell Banks, and EFHCAs).						
	State trip limits and seasons may be more restrictive than federal trip limits, particularly in waters off Oregon and California.						
3	**Minor slope rockfish[2/] & Darkblotched rockfish**	40,000 lb/ 2 months					
4	**Splitnose**	40,000 lb/ 2 months					
5	**Sablefish**						
6	40°10' - 36° N. lat.	300 lb/ day, or 1 landing per week of up to 1,000 lb, not to exceed 5,000 lb/ 2 months			500 lb/ day, or 1 landing per week of up to 1,000 lb, not to exceed 5,000 lb/ 2 months		
7	South of 36° N. lat.	400 lb/ day, or 1 landing per week of up to 1,500 lb					
8	**Longspine thornyhead**	10,000 lb / 2 months					
9	**Shortspine thornyhead**						
10	40°10' - 34°27' N. lat.	2,000 lb/ 2 months					
11	South of 34°27' N. lat.	3,000 lb/ 2 months					
12	**Dover sole**	5,000 lb/ month South of 42° N. lat., when fishing for "other flatfish," vessels using hook-and-line gear with no more than 12 hooks per line, using hooks no larger than "Number 2" hooks, which measure 11 mm (0.44 inches) point to shank, and up to two 1 lb (0.45 kg) weights per line are not subject to the RCAs.					
13	**Arrowtooth flounder**						
14	**Petrale sole**						
15	**English sole**						
16	**Starry flounder**						
17	**Other flatfish[1/]**						
18	**Whiting**	10,000 lb/ trip					
19	**Minor shelf rockfish[2/], Shortbelly, Widow rockfish, and Bocaccio (including Chilipepper between 40°10' - 34°27' N. lat.)**						
20	40°10' - 34°27' N. lat.	Minor shelf rockfish, shortbelly, widow rockfish, bocaccio & chilipepper: 2,500 lb/ 2 months, of which no more than 500 lb/ 2 months may be any species other than chilipepper.					
21	South of 34°27' N. lat.	3,000 lb/ 2 months	CLOSED	3,000 lb/ 2 months			
22	**Chilipepper rockfish**						
23	40°10' - 34°27' N. lat.	Chilipepper included under minor shelf rockfish, shortbelly, widow and bocaccio limits - - See above					
24	South of 34°27' N. lat.	2,000 lb/ 2 months, this opportunity only available seaward of the nontrawl RCA					
25	**Canary rockfish**	CLOSED					
26	**Yelloweye rockfish**	CLOSED					
27	**Cowcod**	CLOSED					
28	**Bocaccio**						
29	40°10' - 34°27' N. lat.	Bocaccio included under Minor shelf rockfish, shortbelly, widow & chilipepper limits -- See above					
30	South of 34°27' N. lat.	300 lb/ 2 months	CLOSED	300 lb/ 2 months			

TABLE 4 (South)

Table 4 (South). Continued

31	**Minor nearshore rockfish & Black rockfish**							
32	Shallow nearshore	600 lb/ 2 months	CLOSED	800 lb/ 2 months	900 lb/ 2 months	800 lb/ 2 months	600 lb/ 2 months	
33	Deeper nearshore							
34	40°10' - 34°27' N. lat.	700 lb/ 2 months	CLOSED	700 lb/ 2 months		600 lb/ 2 months	700 lb/ 2 months	
35	South of 34°27' N. lat.	500 lb/ 2 months		600 lb/ 2 months				
36	California scorpionfish	600 lb/ 2 months	CLOSED	600 lb/ 2 months	800 lb/ 2 months		600 lb/ 2 months	
37	**Lingcod**[3/]	CLOSED		800 lb/ 2 months			400 lb/ month	CLOSED
38	**Pacific cod**	1,000 lb/ 2 months						
39	**Spiny dogfish**	200,000 lb/ 2 months		150,000 lb/ 2 months	100,000 lb/ 2 months			
40	**Other fish**[4/] **& Cabezon**	Not limited						

TABLE 4 (South)

1/ "Other flatfish" are defined at § 660.302 and include butter sole, curlfin sole, flathead sole, Pacific sanddab, rex sole, rock sole, and sand sole.
2/ POP is included in the trip limits for minor slope rockfish. Yellowtail is included in the trip limits for minor shelf rockfish.
3/ The minimum size limit for lingcod is 24 inches (61 cm) total length South of 42° N. lat.
4/ "Other fish" are defined at § 660.302 and include sharks, skates (including longnose skates), ratfish, morids, grenadiers, and kelp greenling.
5/ The Rockfish Conservation Area is a gear and/or sector specific closed area generally described by depth contours but specifically defined by lat/long coordinates set out at §§ 660.391-660.394, except that the 20-fm depth contour off California is defined by the depth contour and not coordinates.

To convert pounds to kilograms, divide by 2.20462, the number of pounds in one kilogram.

Table 5 (North) to Part 660, Subpart G -- 2009-2010 Trip Limits for Open Access Gears North of 40°10' N. Lat.

Other Limits and Requirements Apply -- Read § 660.301 - § 660.399 before using this table 111208

		JAN-FEB	MAR-APR	MAY-JUN	JUL-AUG	SEP-OCT	NOV-DEC
	Rockfish Conservation Area (RCA)[6/]:						
1	North of 46°16' N. lat.	shoreline - 100 fm					
2	46°16' N. lat. - 45°03.83' N. lat.	30 fm - 100 fm					
3	45°03.83' N. lat. - 42°50' N. lat.	30 fm - 125 fm [7/]					
4	42°50' N. lat. - 40°10' N. lat.	20 fm - 100 fm					
	See § 660.370 and § 660.383 for Additional Gear, Trip Limit, and Conservation Area Requirements and Restrictions. See §§ 660.390-660.394 and §§ 660.396-660.399 for Conservation Area Descriptions and Coordinates (including RCAs, YRCA, CCAs, Farallon Islands, Cordell Banks, and EFHCAs).						
	State trip limits and seasons may be more restrictive than federal trip limits, particularly in waters off Oregon and California.						
5	**Minor slope rockfish[1/] & Darkblotched rockfish**	Per trip, no more than 25% of weight of the sablefish landed					
6	**Pacific ocean perch**	100 lb/ month					
7	**Sablefish**	300 lb/ day, or 1 landing per week of up to 800 lb, not to exceed 2,400 lb/ 2 months		300 lb/ day, or 1 landing per week of up to 800 lb, not to exceed 2,200 lb/ 2 months			
8	**Thornyheads**	CLOSED					
9	**Dover sole**	3,000 lb/month, no more than 300 lb of which may be species other than Pacific sanddabs. South of 42° N. lat., when fishing for "other flatfish," vessels using hook-and-line gear with no more than 12 hooks per line, using hooks no larger than "Number 2" hooks, which measure 11 mm (0.44 inches) point to shank, and up to two 1 lb (0.45 kg) weights per line are not subject to the RCAs.					
10	**Arrowtooth flounder**						
11	**Petrale sole**						
12	**English sole**						
13	**Starry flounder**						
14	**Other flatfish[2/]**						
15	**Whiting**	300 lb/ month					
16	**Minor shelf rockfish[1/], Shortbelly, Widow, & Yellowtail rockfish**	200 lb/ month					
17	**Canary rockfish**	CLOSED					
18	**Yelloweye rockfish**	CLOSED					
19	**Minor nearshore rockfish & Black rockfish**						
20	North of 42° N. lat.	5,000 lb/ 2 months, no more than 1,200 lb of which may be species other than black or blue rockfish 3/					
21	42° - 40°10' N. lat.	6,000 lb/ 2 months, no more than 1,200 lb of which may be species other than black or blue rockfish 3/					
22	**Lingcod[4/]**	CLOSED		400 lb/ month			CLOSED
23	**Pacific cod**	1,000 lb/ 2 months					
24	**Spiny dogfish**	200,000 lb/ 2 months		150,000 lb/ 2 months	100,000 lb/ 2 months		
25	**Other Fish[5/]**	Not limited					

TABLE 5 (North)

Table 5 (North). Continued

26	**PINK SHRIMP NON-GROUNDFISH TRAWL** *(not subject to RCAs)*		**TABLE 5 (North) con't**
27	North	**Effective April 1 - October 31:** Groundfish: 500 lb/day, multiplied by the number of days of the trip, not to exceed 1,500 lb/trip. The following sublimits also apply and are counted toward the overall 500 lb/day and 1,500 lb/trip groundfish limits: lingcod 300 lb/month (minimum 24 inch size limit); sablefish 2,000 lb/month; canary, thornyheads and yelloweye rockfish are PROHIBITED. All other groundfish species taken are managed under the overall 500 lb/day and 1,500 lb/trip groundfish limits. Landings of these species count toward the per day and per trip groundfish limits and do not have species-specific limits. The amount of groundfish landed may not exceed the amount of pink shrimp landed.	
28	**SALMON TROLL**		
29	North	Salmon trollers may retain and land up to 1 lb of yellowtail rockfish for every 2 lbs of salmon landed, with a cumulative limit of 200 lb/month, both within and outside of the RCA. This limit is within the 200 lb per month combined limit for minor shelf rockfish, widow rockfish and yellowtail rockfish, and not in addition to that limit. All groundfish species are subject to the open access limits, seasons and RCA restrictions listed in the table above.	

1/ Bocaccio, chilipepper and cowcod rockfishes are included in the trip limits for minor shelf rockfish. Splitnose rockfish is included in the trip limits for minor slope rockfish.
2/ "Other flatfish" are defined at § 660.302 and include butter sole, curlfin sole, flathead sole, Pacific sanddab, rex sole, rock sole, and sand sole.
3/ For black rockfish north of Cape Alava (48°09.50' N. lat.), and between Destruction Is. (47°40' N. lat.) and Leadbetter Pnt. (46°38.17' N. lat.), there is an additional limit of 100 lbs or 30 percent by weight of all fish on board, whichever is greater, per vessel, per fishing trip.
4/ The minimum size limit for lingcod is 22 inches (56 cm) total length North of 42° N. lat. and 24 inches (61 cm) total length South of 42° N. lat.
5/ "Other fish" are defined at § 660.302 and include sharks, skates (including longnose skates), ratfish, morids, grenadiers, and kelp greenling. Cabezon is included in the trip limits for "other fish."
6/ The Rockfish Conservation Area is a gear and/or sector specific closed area generally described by depth contours but specifically defined by lat/long coordinates set out at §§ 660.391-660.394.
7/ The 125 fm restriction is in place all year, except on days when the directed halibut fishery is open. On those days the 100 fm depth restriction is in effect.

To convert pounds to kilograms, divide by 2.20462, the number of pounds in one kilogram.

Table 5 (South) to Part 660, Subpart G -- 2009-2010 Trip Limits for Open Access Gears South of 40°10' N. Lat.

Other Limits and Requirements Apply – Read § 660.301 - § 660.399 before using this table 111208

		JAN-FEB	MAR-APR	MAY-JUN	JUL-AUG	SEP-OCT	NOV-DEC
	Rockfish Conservation Area (RCA)[5/]:						
1	40°10' - 34°27' N. lat.	30 fm - 150 fm					
2	South of 34°27' N. lat.	60 fm - 150 fm (also applies around islands)					
	See § 660.370 and § 660.383 for Additional Gear, Trip Limit, and Conservation Area Requirements and Restrictions. See §§ 660.390-660.394 and §§ 660.396-660.399 for Conservation Area Descriptions and Coordinates (including RCAs, YRCA, CCAs, Farallon Islands, Cordell Banks, and EFHCAs).						
	State trip limits and seasons may be more restrictive than federal trip limits, particularly in waters off Oregon and California.						
3	**Minor slope rockfish[1/] & Darkblotched rockfish**						
4	40°10' - 38° N. lat.	Per trip, no more than 25% of weight of the sablefish landed					
5	South of 38° N. lat.	10,000 lb/ 2 months					
6	**Splitnose**	200 lb/ month					
7	**Sablefish**						
8	40°10' - 36° N. lat.	300 lb/ day, or 1 landing per week of up to 800 lb, not to exceed 2,400 lb/ 2 months		300 lb/ day, or 1 landing per week of up to 800 lb, not to exceed 2,200 lb/ 2 months			
9	South of 36° N. lat.	400 lb/ day, or 1 landing per week of up to 1,500 lb, not to exceed 8,000 lb/ 2 months					
10	**Thornyheads**						
11	40°10' - 34°27' N. lat.	CLOSED					
12	South of 34°27' N. lat.	50 lb/ day, no more than 1,000 lb/ 2 months					
13	**Dover sole**	3,000 lb/month, no more than 300 lb of which may be species other than Pacific sanddabs. South of 42° N. lat., when fishing for "other flatfish," vessels using hook-and-line gear with no more than 12 hooks per line, using hooks no larger than "Number 2" hooks, which measure 11 mm (0.44 inches) point to shank, and up to two 1 lb (0.45 kg) weights per line are not subject to the RCAs.					
14	**Arrowtooth flounder**						
15	**Petrale sole**						
16	**English sole**						
17	**Starry flounder**						
18	**Other flatfish[2/]**						
19	**Whiting**	300 lb/ month					
20	**Minor shelf rockfish[1/], Shortbelly, Widow & Chilipepper rockfish**						
21	40°10' - 34°27' N. lat.	300 lb/ 2 months	CLOSED	200 lb/ 2 months		300 lb/ 2 months	
22	South of 34°27' N. lat.	750 lb/ 2 months		750 lb/ 2 months			
23	**Canary rockfish**	CLOSED					
24	**Yelloweye rockfish**	CLOSED					
25	**Cowcod**	CLOSED					
26	**Bocaccio**						
27	40°10' - 34°27' N. lat.	200 lb/ 2 months	CLOSED	100 lb/ 2 months		200 lb/ 2 months	
28	South of 34°27' N. lat.	100 lb/ 2 months		100 lb/ 2 months			

TABLE 5 (South)

Table 5 (South). Continued

29	**Minor nearshore rockfish & Black rockfish**						
30	Shallow nearshore	600 lb/ 2 months	CLOSED	800 lb/ 2 months	900 lb/ 2 months	800 lb/ 2 months	600 lb/ 2 months
31	Deeper nearshore						
32	40°10' - 34°27' N. lat.	700 lb/ 2 months	CLOSED	700 lb/ 2 months		600 lb/ 2 months	700 lb/ 2 months
33	South of 34°27' N. lat.	500 lb/ 2 months		600 lb/ 2 months			
34	California scorpionfish	600 lb/ 2 months	CLOSED	600 lb/ 2 months	800 lb/ 2 months		600 lb/ 2 months
35	**Lingcod[3/]**	CLOSED		400 lb/ month			CLOSED
36	**Pacific cod**	1,000 lb/ 2 months					
37	**Spiny dogfish**	200,000 lb/ 2 months		150,000 lb/ 2 months	100,000 lb/ 2 months		
38	**Other Fish[4/] & Cabezon**	Not limited					
39	**RIDGEBACK PRAWN AND, SOUTH OF 38°57.50' N. LAT., CA HALIBUT AND SEA CUCUMBER NON-GROUNDFISH TRAWL**						
40	**NON-GROUNDFISH TRAWL Rockfish Conservation Area (RCA) for CA Halibut, Sea Cucumber & Ridgeback Prawn:**						
41	40°10' - 38° N. lat.	100 fm - modified 200 fm [6/]	100 fm - 150 fm				100 fm - modified 200 fm [6/]
42	38° - 34°27' N. lat.	100 fm - 150 fm					
43	South of 34°27' N. lat.	100 fm - 150 fm along the mainland coast; shoreline - 150 fm around islands					
44		Groundfish: 300 lb/trip. Trip limits in this table also apply and are counted toward the 300 lb groundfish per trip limit. The amount of groundfish landed may not exceed the amount of the target species landed, except that the amount of spiny dogfish landed may exceed the amount of target species landed. Spiny dogfish are limited by the 300 lb/trip overall groundfish limit. The daily trip limits for sablefish coastwide and thornyheads south of Pt. Conception and the overall groundfish "per trip" limit may not be multiplied by the number of days of the trip. Vessels participating in the California halibut fishery south of 38°57.50' N. lat. are allowed to (1) land up to 100 lb/day of groundfish without the ratio requirement, provided that at least one California halibut is landed and (2) land up to 3,000 lb/month of flatfish, no more than 300 lb of which may be species other than Pacific sanddabs, sand sole, starry flounder, rock sole, curlfin sole, or California scorpionfish (California scorpionfish is also subject to the trip limits and closures in line 31).					
45	**PINK SHRIMP NON-GROUNDFISH TRAWL GEAR** *(not subject to RCAs)*						
46	South	**Effective April 1 - October 31:** Groundfish: 500 lb/day, multiplied by the number of days of the trip, not to exceed 1,500 lb/trip. The following sublimits also apply and are counted toward the overall 500 lb/day and 1,500 lb/trip groundfish limits: lingcod 300 lb/ month (minimum 24 inch size limit); sablefish 2,000 lb/ month; canary, thornyheads and yelloweye rockfish are PROHIBITED. All other groundfish species taken are managed under the overall 500 lb/day and 1,500 lb/trip groundfish limits. Landings of these species count toward the per day and per trip groundfish limits and do not have species-specific limits. The amount of groundfish landed may not exceed the amount of pink shrimp landed.					

TABLE 5 (South) con't

1/ Yellowtail rockfish is included in the trip limits for minor shelf rockfish and POP is included in the trip limits for minor slope rockfish.
2/ "Other flatfish" are defined at § 660.302 and include butter sole, curlfin sole, flathead sole, Pacific sanddab, rex sole, rock sole, and sand sole.
3/ The size limit for lingcod is 24 inches (61 cm) total length South of 42° N. lat.
4/ "Other fish" are defined at § 660.302 and include sharks, skates (including longnose skates), ratfish, morids, grenadiers, and kelp greenling.
5/ The Rockfish Conservation Area is a gear and/or sector specific closed area generally described by depth contours but specifically defined by lat/long coordinates set out at §§ 660.391-660.394, except that the 20-fm depth contour off California is defined by the depth contour and not coordinates.
6/ The "modified 200 fm" line is modified to exclude certain petrale sole areas from the RCA.

To convert pounds to kilograms, divide by 2.20462, the number of pounds in one kilogram.

[FR Doc. E8–30778 Filed 12–30–08; 8:45 am]
BILLING CODE 3510–22–C

Federal Register

Wednesday,
December 31, 2008

Part III

Department of Labor

Mine Safety and Health Administration
30 CFR Parts 6, 14, 18, et al.
Flame-Resistant Conveyor Belt, Fire Prevention and Detection, and Use of Air From the Belt Entry; Final Rule

DEPARTMENT OF LABOR

Mine Safety and Health Administration

30 CFR Parts 6, 14, 18, 48, and 75

RIN 1219–AB59

Flame-Resistant Conveyor Belt, Fire Prevention and Detection, and Use of Air From the Belt Entry

AGENCY: Mine Safety and Health Administration (MSHA), Labor.

ACTION: Final rule.

SUMMARY: This final rule addresses the recommendations of the Technical Study Panel (Panel) on the Utilization of Belt Air and the Composition and Fire Retardant Properties of Belt Materials in Underground Coal Mining. The Panel was established under Section 11 of the Mine Improvement and New Emergency Response (MINER) Act of 2006. The final rule is consistent with the Panel's recommendations and includes requirements for: Flame-resistant conveyor belts; training Atmospheric Monitoring System operators; levels of respirable dust in belt entries; airlocks along escapeways; minimum and maximum air velocities; approval for the use of air from the belt entry to ventilate working sections; monitoring point-feed regulators; smoke sensors; standardized tactile signals on lifelines; replacing point-type heat sensors with carbon monoxide sensors; and belt conveyor and belt entry maintenance.

DATES: *Effective Date:* The final rule is effective on December 31, 2008.

Compliance Dates: Details are in the **SUPPLEMENTARY INFORMATION** section of this document.

FOR FURTHER INFORMATION CONTACT: Patricia W. Silvey at *silvey.patricia@dol.gov* (e-mail), (202) 693–9440 (Voice), or (202) 693–9441 (Fax).

SUPPLEMENTARY INFORMATION:

Compliance Dates

Each mine operator shall comply with the following sections by the dates listed below.

1. § 48.27(a) and §§ 75.156(a), 75.350(b), and 75.1731 by March 2, 2009.
2. § 75.333(c)(4) by March 31, 2009.
3. §§ 75.380(d)(7), 75.380(f), 75.381(e)(5), and 75.381(f) by June 30, 2009.
4. §§ 75.350(a)(2), 75.351(e)(2), 75.1103–4(a), 75.1108(a), and 75.1108(b) December 31, 2009.
5. § 75.1108(c) by December 31, 2018.

The outline of the final rule is as follows:

I. Introduction
II. Statutory and Rulemaking Background
III. Section-by-Section Analysis
A. Flame-Resistant Conveyor Belt
1. General
2. Discussion of Final Rule
3. Conforming Amendments
B. Fire Prevention and Detection and Approval of the Use of Air From the Belt Entry To Ventilate Working Sections
1. General
2. Discussion of Final Rule
IV. Regulatory Economic Analysis
A. Executive Order 12866
B. Population-at-Risk
C. Benefits
D. Compliance Costs
V. Feasibility
A. Technological Feasibility
B. Economic Feasibility
VI. Regulatory Flexibility Act and Small Business Regulatory Enforcement Fairness Act (SBREFA)
A. Definition of a Small Mine
B. Factual Basis for Certification
VII. Paperwork Reduction Act of 1995
A. Summary
B. Procedural Details
VIII. Other Regulatory Considerations
A. The Unfunded Mandates Reform Act of 1995
B. Treasury and General Government Appropriations Act of 1999: Assessment of Federal Regulations and Policies on Families
C. Executive Order 12630: Government Actions and Interference With Constitutionally Protected Property Rights
D. Executive Order 12988: Civil Justice Reform
E. Executive Order 13045: Protection of Children From Environmental Health Risks and Safety Risks
F. Executive Order 13132: Federalism
G. Executive Order 13175: Consultation and Coordination With Indian Tribal Governments
H. Executive Order 13211: Actions Concerning Regulations That Significantly Affect Energy Supply, Distribution, or Use
I. Executive Order 13272: Proper Consideration of Small Entities in Agency Rulemaking
IX. Final Rule

I. Introduction

This final rule addresses the recommendations of the Technical Study Panel (Panel), which was established under Section 11 of the MINER Act. The Secretary of Labor chartered the Panel on December 22, 2006 (71 FR 77069).

On December 20, 2007, the Panel issued its final report, which included the following 20 recommendations passed by unanimous vote:

- Recommendation 1—Conveyor belt flammability testing and approval;
- Recommendation 2—Other belt tests;
- Recommendation 3—Improved fire resistance standards for all underground coal mines;
- Recommendation 4—Coordinating belt testing with other countries;
- Recommendation 5—Belt entry and conveyor belt maintenance;
- Recommendation 6—Special requirements for the use of belt air;
- Recommendation 7—Belt air approval recommendation;
- Recommendation 8—Discontinuing point-type heat sensors;
- Recommendation 9—Smoke sensors;
- Recommendation 10—Use of diesel-discriminating sensors;
- Recommendation 11—Review of AMS records;
- Recommendation 12—AMS operator training certification;
- Recommendation 13—Minimum and maximum air velocities;
- Recommendation 14—Escapeways and leakage;
- Recommendation 15—Lifelines;
- Recommendation 16—Point-feeding;
- Recommendation 17—Respirable dust;
- Recommendation 18—Mine methane;
- Recommendation 19—Inspections; and
- Recommendation 20—Research.

A copy of the Panel's report is available on MSHA's Web site at: *http://www.msha.gov/beltair/BeltAirFinalReport122007.pdf.*

The final rule is based on the Panel's recommendations, Agency data and experience, and comments and testimony received during the rulemaking process. MSHA is providing delayed compliance dates for some requirements in the final rule for mine operators to have adequate time to comply.

II. Statutory and Rulemaking Background

The Consolidated Appropriations Act of 2008 (Pub. L. 110–161, December 26, 2007) requires the Secretary to publish regulations, consistent with the recommendations of the Panel, to require that:

> [i]n any coal mine * * * belt haulage entries not be used to ventilate active working places without prior approval from the Assistant Secretary. Further, a mine ventilation plan incorporating the use of air coursed through belt haulage entries to ventilate active working places shall not be approved until the Assistant Secretary has reviewed the elements of the plan related to the use of belt air and has determined that the plan at all times affords at least the same measure of protection where belt haulage entries are not used to ventilate working places.

The regulations must be finalized by December 31, 2008.

Based on the Panel's recommendations, MSHA published a proposed rule on Safety Standards Regarding the Recommendations of the Technical Study Panel on the Utilization of Belt Air and the Composition and Fire Retardant Properties of Belt Materials in Underground Coal Mining in the **Federal Register** on June 19, 2008 (73 FR 35026). On that same date, MSHA published a Request for Information (RFI) in the **Federal Register** on criteria for testing the toxicity and density of smoke produced from burning conveyor belt or similar materials (73 FR 35057).

The Agency will review relevant information received on the RFI and make a determination on appropriate regulatory action.

The Agency held four public hearings on: August 19, 2008 in Salt Lake City, UT; August 21, 2008 in Lexington, KY; August 26, 2008 in Charleston, WV; and August 28, 2008 in Birmingham, AL. The comment period closed on September 8, 2008.

Like the proposal, the final rule includes new and revised safety standards for underground coal mines for those Panel recommendations that required rulemaking. The following five recommendations did not require rulemaking: Recommendation 2, concerning ''Other Belt Tests,'' recommends that MSHA adopt a drum friction test to be utilized for a period of two years to evaluate and assess the contribution to conveyor belt fire safety of such a test. MSHA is continuing to evaluate the drum friction test to determine if it could complement the Belt Evaluation Laboratory Test method. This evaluation will occur over a two-year period, and is consistent with the Panel's recommendation. Recommendation 4, concerning ''Coordinating belt testing with other countries,'' recommends that MSHA establish contacts and maintain dialogue with other key mining countries. MSHA's technical support program area maintains continuing contact and dialogue with other key mining countries. Recommendation 11, concerning ''Review of AMS records,'' recommends that MSHA perform regular, periodic reviews of atmospheric monitoring system (AMS) records at mines using air from the belt entry to ventilate working sections. In addition, MSHA already conducts periodic reviews of AMS records during regular inspections of the mine. Recommendation 19, concerning ''Inspections of mines utilizing belt air in the working section,'' recommends that a more structured procedure be instituted to help mine inspectors complete their inspection duties with greater ease and efficiency. MSHA will accomplish this through inspector training. Recommendation 20, concerning ''Research,'' recommends research utilizing ventilation modeling, engineering design and risk analysis be performed to investigate: Improved escapeway design, reduced air leakage, and booster fans. MSHA will accomplish this through the Agency's technical support program area, working in collaboration with the National Institute for Occupational Safety and Health (NIOSH).

This preamble, like that of the proposal, is organized in two parts. Part III(A) includes requirements for improved flame-resistant conveyor belts. Part III(B) includes requirements for fire prevention and detection and approval of the use of air from the belt entry to ventilate working sections.

III. Section-by-Section Analysis

A. Flame-Resistant Conveyor Belt

1. General

In the 1980s, MSHA and the former Bureau of Mines (Bureau) of the Department of the Interior developed a flame-resistance test for conveyor belts that would result in a higher level of flame resistance than the existing 30 CFR Part 18 test. The Bureau and MSHA constructed a large-scale test facility at the Lake Lynn Laboratory. The large scale tests showed the effect of air flow on belt flammability. These tests were conducted over a wide range of air velocities.

MSHA used the large-scale flammability test data to develop the Belt Evaluation Laboratory Test (BELT), a laboratory-scale flame resistance test. In order for a belt to pass the BELT method, it must have improved fire-resistant capability, which greatly limits flame propagation. The BELT method is easy to perform, objective, correlates well with large-scale tests, and is economically and technologically feasible. MSHA and the Bureau performed extensive testing of the BELT method. Test results over a 34-month period, based on samples of conveyor belts, reveal that the BELT method is highly precise and accurate.

On December 24, 1992, MSHA published a proposal to revise the existing regulation for testing and acceptance of conveyor belts (53 FR 61524). That proposal would have replaced existing § 18.65 concerning flame-testing of conveyor belts. Under the 1992 proposal, underground conveyor belts would have been required to meet the more protective BELT method for MSHA approval under proposed Part 14.

However, the Agency withdrew the proposal (67 FR 46431) on July 15, 2002, due to the decreased frequency of conveyor belt fires. As mentioned earlier, in accordance with Section 11 of the 2006 MINER Act and the recommendation of the Panel, MSHA issued a proposal on June 19, 2008 on Safety Standards Regarding the Recommendations of the Technical Study Panel on the Utilization of Belt Air and the Composition and Fire Retardant Properties of Belt Materials in Underground Coal Mining.

The final rule addresses Panel Recommendation No. 1—Conveyor Belt Flammability Testing and Approval, and Recommendation No. 3—Improved Fire Resistance Standards for All Underground Coal Mines. Consistent with the Panel's recommendations, this final rule establishes a new Part 14 that includes the BELT method for the approval of improved flame-resistant conveyer belts. In addition, the final rule requires that improved flame-resistant conveyor belts be used in all underground coal mines. It makes technical and conforming changes to existing Parts 6 and 18.

2. Discussion of the Final Rule

Final § 14.1, changed from the proposal, establishes the purpose of the final rule and effective date for approval holders. Final Part 14 establishes the flame resistance requirements for MSHA approval of conveyor belts for use in underground coal mines. Applications for approval or extensions of approval submitted after December 31, 2008 must meet the requirements of final Part 14.

During the rulemaking process and at each of the public hearings, MSHA solicited comments on the impact of the proposed one-year period provided manufacturers and operators to transition to the new belt, on existing inventories, and associated costs to approval holders. A commenter stated that the transition period was adequate and that they would not have any difficulty meeting it as long as the approval process was quick. Another commenter stated that the timetable established by the Agency may be too aggressive to assure that all the laboratory testing and approvals are timely completed so that belt manufacturing and delivery of the new belt products are timely. Based on Agency experience, MSHA's timely processing of applications will be dependent upon the completeness of applications submitted to the Agency. To assure that the new belt will be

available in a timely manner, the final rule requires that all applications for approval or extensions of approval submitted after December 31, 2008 meet the requirements of the final rule. MSHA intends to process all applications that fully comply with the requirements in the final rule on a timely basis.

Final § 14.2 establishes the following definitions: ''Applicant'', like the proposal, is derived from existing §§ 6.2 and 7.2, and refers to an individual or organization that manufactures or controls the production of a conveyor belt and who applies to MSHA for approval. MSHA received no comments on the proposal.

''Approval'', like the proposal, is derived from existing § 7.2, and replaces the term ''acceptance'' under existing § 18.2. An approval, issued by MSHA, shows that a conveyor belt has met the requirements of this Part, and authorizes a marking identifying the belt as approved. This is consistent with other MSHA approval regulations which define ''approved'' as the general term which indicates that a product has met MSHA's technical requirements. MSHA received no comments on the proposal.

''Extension of approval'', like the proposal, is derived from existing § 7.2, and is defined as a document issued by MSHA which states that a change to a conveyor belt previously approved by MSHA continues to meet the requirements of this Part. An extension of approval authorizes the continued use of the approval marking after the appropriate extension number has been added. MSHA received no comments on the proposal.

''Flame-retardant ingredient'', like the proposal, means material that inhibits ignition or flame propagation. MSHA received no comments on the proposal.

''Flammable ingredient'', like the proposal, means material that is capable of combustion. MSHA received no comments on the proposal.

''Inert ingredient'', like the proposal, means a material that does not contribute to combustion. MSHA received no comments on the proposal.

''Post-approval product audit'', like the proposal, is derived from existing § 7.2, and is defined as an examination, testing, or both, by MSHA of an approved conveyor belt selected by MSHA to determine if it meets the technical requirements and has been manufactured as approved. MSHA received no comments on the proposal.

''Similar conveyor belt'', like the proposal, is defined as a conveyor belt that shares the same cover compound, general carcass construction, and fabric type as another approved conveyor belt. MSHA received no comments on the proposal.

Final § 14.3, derived from existing § 18.9(a), provides that representatives of the applicant and other persons agreed upon by MSHA and the applicant may be present during tests and evaluations conducted under this Part. In response to comments, the final rule is changed from the proposal to allow the Agency to consider requests received from others to observe tests.

Commenters requested that miners (or representatives of the miners) be allowed to observe and evaluate the testing of belts. In response to this comment, the final rule would allow the Agency to consider requests received from others to observe tests. It is important to note that such requests would only apply to tests, not evaluations. MSHA's evaluations involve a paper review of the application and thus would not be appropriate for observation. MSHA believes that observation of tests may be appropriate if it does not involve the release of proprietary information, so long as it does not interfere with the approval process, does not delay the approval, and does not create a conflict of interest. As stated during the rulemaking process, the Agency must protect any proprietary information submitted.

With this revision, MSHA intends that the approval process for flame-resistant conveyor belt be as transparent as possible, while safeguarding the confidentiality of all proprietary information submitted by applicants. The Agency made a minor non-substantive change, which clarifies that it is not necessary to state that MSHA be included in the parties allowed to observe testing and evaluation.

Final § 14.4, like the proposal, is derived from existing §§ 7.3 and 18.6, and provides application procedures and requirements. The final rule covers two types of approval actions: Applications for approval and extensions of approval. When requesting the approval of a flame-resistant conveyor belt, final § 14.4 requires that the applicant submit information necessary to properly evaluate a conveyor belt. If, after receipt of an approval, the applicant requests approval of a similar conveyor belt or an extension of approval for the original conveyor belt, the applicant will not be required to submit documentation duplicative of previously submitted information. Only information related to changes in the previously approved conveyor belt will be required, avoiding unnecessary paperwork.

Final § 14.4(a), like the proposal, is based on existing §§ 7.3(a) and 18.6(a). It specifies how and where an applicant files for MSHA approval or extension of approval. Paragraph (a) requires that applications for approvals or extensions of approval be sent to: U.S. Department of Labor, Mine Safety and Health Administration, Chief, Approval and Certification Center, 765 Technology Drive, Triadelphia, West Virginia 26059. Alternatively, applications for approval or extensions of approval may be filed online at *http://www.msha.gov* or faxed to: Chief, Mine Safety and Health Administration Approval and Certification Center at 304–547–2044. Since the proposal, the address of the Center has been changed (73 FR 52210); the final rule reflects this change. MSHA received no comments on the proposal.

Final paragraph (b), like the proposal, requires that each application for approval contain information concerning the identification and construction of a conveyor belt, except any information submitted in a prior approval application need not be re-submitted. An application must address either a single specific construction, or multiple-ply construction consisting of the same cover compound and carcass construction varying only by the number of plies and fabric weight. Under the final rule, if approval of multiple-ply construction is requested, the minimum and maximum number of plies both with thinnest-specified cover thickness and heaviest-specified fabric weight will be tested.

Final § 14.4(b)(1), like the proposal, requires a technical description of the conveyor belt. This information must include: Trade name (specification or code numbers) or identification number; cover compound type and designation number; belt thickness and thickness of top and bottom covers; presence and type of skim coat; presence and type of friction coat; carcass construction (number of plies, solid woven); carcass fabric by textile type and weight (ounces per square yard); presence and type of breaker or floated ply; and the number, type, and size of cords and fabric for metal cord belts. MSHA received no comments on the proposal.

Proposed § 14.4(b)(3) has been renumbered as § 14.4(b)(2). Like the proposal, it requires the name, address, and telephone number of the applicant's representative responsible for answering any questions regarding the application. The applicant may also wish to include the representative's electronic mail (e-mail) address. MSHA received no comments on the proposal.

Proposed § 14.4(b)(2) has been renumbered as final § 14.4(c)(1). The final rule permits an applicant to request an approval of a similar belt or extension of approval without testing if the formulation of the belt is provided and MSHA determines testing is not necessary. The application must include formulation information on the compounds in the conveyor belt (for example, styrene-butadiene rubber (SBR), polyvinyl chloride (PVC), chloroprene, composite, or steel cable) by specifying either: (1) Each ingredient by its chemical name along with its percentage (weight) and tolerance or percentage range; or (2) each flame-retardant ingredient by its chemical or generic name with its percentage and tolerance or percentage range, or its minimum percent. The applicant must list each flammable and inert ingredient by chemical, generic or trade name, along with the total percentage of all flammable and inert ingredients. MSHA will evaluate this information and determine whether testing using the BELT method should occur or if the similar belt or extension of approval can be approved without testing.

A commenter stated that the actual formulation data required to be submitted to MSHA is more extensive than the existing standard requires and includes competitively sensitive information. The commenter also stated that even though MSHA intends to protect the confidentiality of the information, there can be no guarantees. This commenter stated that MSHA should be prohibited from requiring compounding or formulation information to be submitted as part of the application for approval.

Approving belts based upon an evaluation of the formulation and construction of the belt speeds the approval process and reduces cost to the applicant by eliminating testing fees. To approve a belt without testing, detailed formulation information on the composition and construction of the previously approved belt or belt family is necessary to assure that the flame-resistant properties would be maintained. This information may not be necessary if each belt construction is tested using the BELT method. To address this commenter's concern, the final rule allows the option of submitting detailed formulation and construction data for belts, or submitting samples for testing. Applicants who choose to submit samples for testing would be responsible for testing fees.

When the formulation and construction information is collected, MSHA is required to maintain the proprietary nature of this conveyor belt information submitted under final § 14.4 under the Freedom of Information Act (FOIA, 5 U.S.C. 552). MSHA intends to continue its existing practice of treating information on product specifications and performance as proprietary information. The Agency will protect disclosure of this information to the fullest extent, consistent with the FOIA. Section 14.9 of the final rule provides that MSHA notify the applicant of requests for product information. MSHA will provide the manufacturer the opportunity to present its position on disclosure. In addition, information identified by the manufacturer as proprietary will not be disclosed.

Proposed § 14.4(b)(4) has been renumbered as final § 14.4(c)(2). It requires the identification of any similar conveyor belt for which the applicant already holds an approval. The final rule has been revised to require submission of the formulation specifications for the approved similar belt if it has not already been submitted to the Agency. This would be the same information as specified in § 14.4(c)(1).

Final § 14.4(c)(2)(i) requires the applicant to submit, as part of the application, the MSHA assigned approval number of the belt that most closely resembles the one being evaluated. Final § 14.4(c)(2)(ii) requires an explanation of any changes from the existing approval. MSHA's evaluation of whether a belt is similar will determine if the application has to be processed as an extension of approval or a new approval.

A commenter stated that this proposal is confusing. This commenter further stated that MSHA should take the safe approach and test all belt products, regardless of the number of plies. Under existing Part 18, MSHA's testing program for accepting belts over the last 30 years includes the evaluation of similar belts. Under the existing program, each belt that is submitted to MSHA is thoroughly evaluated according to existing application procedures to determine if additional testing is necessary or if an extension is justified. The use of the BELT method will greatly increase safety to miners by the approval of improved flame-resistant belt. Further, additional information required under the final rule will allow MSHA to provide a full evaluation of the belt application.

Final § 14.4(d), renumbered from proposed § 14.4(c), requires that any change from the documentation on file at MSHA that affects the technical requirements of Part 14 must be submitted for approval prior to implementing the change. This requirement avoids changes being made that could affect the flame resistant properties of the conveyor belt. MSHA received no comments on the proposal.

Final § 14.4(d)(1), (2), and (3), like the proposal, include requirements for each application for an extension of approval. Final paragraph (d)(1) requires the MSHA-assigned approval number of the conveyor belt for which the extension is sought; final paragraph (d)(2) requires the description of the proposed change to the conveyor belt; and final paragraph (d)(3) requires the name, address, and telephone number of the applicant's representative responsible for answering any questions regarding the application. The applicant may also include the representative's e-mail address. MSHA received no comments on the proposal.

Final § 14.4(e), renumbered from proposed § 14.4(d), provides that MSHA will determine if testing, additional information, samples, or material is needed to evaluate an application. Under the final rule, if an applicant believes that flame testing is not required, a statement explaining the rationale must be included in the application. MSHA received no comments on the proposal.

Final § 14.4(f), renumbered from proposed § 14.4(e), permits an applicant to request an equivalency determination under existing § 6.20 for a non-MSHA product safety standard. MSHA received no comments on the proposal.

Final § 14.4(g), renumbered from proposed § 14.4(f), requires that fees calculated in accordance with Part 5, entitled: Fee for Testing, Evaluation, and Approval of Mining Products, must be submitted. MSHA received no comments on the proposal.

Final § 14.5, like the proposal, requires that upon request by MSHA, each applicant must submit three pre-cut, unrolled, flat samples of conveyor belt for flame testing. Under the final rule, each sample must be 60 ± ¼ inches (152.4 ± 0.6 cm) long by 9 ± ⅛ inches (22.9 ± 0.3 cm) wide. The laboratory-scale test for flame resistance requires testing of three samples to determine acceptable performance. The final rule requires pre-cut and unrolled flat samples, which can be mounted for testing. Uncut and rolled samples require additional time to be cut and flattened for subsequent mounting in the test chamber. MSHA uses the word ''pre-cut'' to inform the applicant that the samples would need to be sent to MSHA already cut to the required sample size. Under existing § 18.65(a), acceptance applicants are required to submit samples for testing.

Curling of samples has presented a problem during testing. These

requirements, along with the required preconditioning of samples, serve to minimize curling of samples. The requirement to submit samples for testing is derived from existing § 18.6(i). However, the requirement for the number and dimension of samples is specific to the BELT method. MSHA received no comments on the proposal.

Final § 14.6, like the proposal, addresses issuance of approval. Final § 14.6(a) provides that MSHA will issue an approval or notice of the reasons for denying approval after completing the Agency's testing and evaluation. The notice of approval will be accompanied by relevant documentation and related material, covering the details of design and construction of the conveyor belt upon which the approval is based. MSHA received no comments on the proposal.

Final § 14.6(b), like the proposal, requires that an applicant not advertise or otherwise represent a conveyor belt as approved until MSHA has issued an approval. MSHA received no comments on the proposal.

Final § 14.7, like the proposal, includes requirements for approval marking and distribution records. Final § 14.7(a), like the proposal, requires that an approved conveyor belt must be marketed only under the name listed in the approval. MSHA received no comments on the proposal.

Final § 14.7(b), like the proposal, is based on existing § 18.65(f). It requires approved conveyor belts to be legibly and permanently marked with the assigned MSHA approval number for the service life of the product. The approval marking must be at least ½ inch (1.27 cm) high, placed at intervals not to exceed 60 feet (18.3 meters), and repeated at least once every foot (0.3 m or 30.5 centimeters) across the width of the belt. MSHA requires this marking method since a conveyor belt's edges can wear as it passes along the conveyor framework, causing fraying. Fraying of conveyor belts, which may occur during normal use, can cause the approval markings on belts to become illegible or worn. Relocating the markings from the edge of the belt to across its width permits identification of the conveyor belt for a longer time. This method also enables better identification of conveyor belts cut from larger to smaller widths, or where worn edges are trimmed. MSHA received no comments on the proposal.

Final § 14.7(c), like the proposal, provides that where the construction of a conveyor belt does not permit marking as prescribed under the final rule, other permanent marking may be accepted by MSHA. This provision allows alternatives for marking conveyor belts. MSHA received no comments on the proposal.

Final § 14.7(d), like the proposal, requires that the applicant maintain records of the initial sale of each belt having an approval marking. Under the final rule, the record must be retained for at least 5 years following the initial sale. Information on initial sales should include the sale date, the customer name and address, and the belt identification by slab, batch or lot. A five-year retention period conforms to MSHA's audit cycle.

During the rulemaking process and at each of the public hearings, MSHA requested comments on the 5-year retention period for sales records. Commenters suggested that sales records be kept as long as the belt is in use, whether it be at the operation it was originally purchased for or other locations. In addition, a commenter stated that in order to keep the record straight, MSHA should require that all sales records follow the belt from the time of purchase to its end-of-service life. Based on MSHA's experience and data, a five-year retention period is adequate to discover any potential hazardous defects, such as through MSHA's post-approval audit process.

Final § 14.8 includes requirements for quality assurance. MSHA received no comments on the proposal.

Final § 14.8(a), like the proposal, requires approval holders to flame test a sample of each batch, lot, or slab of conveyor belts; or flame test or inspect a sample of each batch or lot of the materials that contribute to the flame-resistance characteristic. This assures that the finished conveyor belt slab will meet the flame-resistance test. MSHA received no comments on the proposal.

Final § 14.8(b), like the proposal, requires that the instruments used for quality assurance under paragraph (a) be calibrated according to the instrument manufacturer's specifications. Under this final rule, instruments must be calibrated using standards set by the National Institute of Standards and Technology, U.S. Department of Commerce, or other nationally or internationally recognized standards. The final rule also requires that the instruments used be accurate to at least one significant figure beyond the desired accuracy. This calibration sequence is consistent with the procedure under existing § 7.7. MSHA received no comments on the proposal.

Final § 14.8(c), like the proposal, requires control of production in accordance with the approval. If a third party is assembling or manufacturing all or part of the approved belt, the final rule requires that the approval holder assure that the product is manufactured as approved. MSHA received no comments on the proposal.

Final § 14.8(d), like the proposal, requires approval holders to immediately notify the MSHA Approval and Certification Center of any information that a conveyor belt has been distributed, which does not meet the specifications of the approval. It also requires that the notification include a description of the nature and extent of the problem, the locations where the conveyor belt has been distributed, and the approval holder's plans for corrective action. Under the final rule, notification could be by telephone, e-mail, facsimile, or other similar means. In addition, corrective action may include recalling the conveyor belt or restricting its use pending resolution of the defect. MSHA received no comments on the proposal.

Final § 14.9 is derived from existing § 18.9. It addresses the disclosure of information. Final § 14.9(a), like the proposal, provides that all proprietary information concerning product specifications and performance submitted to MSHA by the applicant will be protected from disclosure. MSHA received no comments on the proposal.

Final § 14.9(b), like the proposal, provides that MSHA will notify applicants or approval holders of requests for disclosure of information concerning their conveyor belts, and provide them an opportunity to present their position prior to any decision on disclosure. MSHA received no comments on the proposal.

Under the final rule, MSHA will treat information on product material, specifications, and processes as protected under exemption 4 of FOIA. Exemption 4 exempts from disclosure ''trade secrets and commercial or financial information'' obtained from an outside source and ''privileged or confidential.'' (5 U.S.C. 552(b)(4)). Under the Department's regulations at 29 CFR 70.26, *Business information,* MSHA will notify the applicant of any FOIA request seeking information submitted by the applicant under the final rule. The applicant then will have a reasonable period of time in which to object to disclosure. An objecting applicant must submit a ''detailed written statement'' showing ''why the information is a trade secret or commercial or financial information that is privileged or confidential'' [29 CFR 70.26(e)]. MSHA will consider the applicant's objections in deciding whether to disclose the information. If MSHA determines that the FOIA

requires disclosure over the applicant's objections, MSHA will notify the applicant of the documents to be disclosed prior to the disclosure date (unless MSHA learns that the material already has lawfully been made public) [29 CFR 70.26(f), (g)]. Under 29 CFR 70.26(b), when submitting documents, applicants should identify the documents they wish to protect by marking them (such as stamping each page ''Confidential''). MSHA notes that it has no authority under the FOIA to withhold applicant documents requested by a Congressional oversight committee.

Final § 14.10 provides for post-approval product audits. Final § 14.10(a), like the proposal, provides that approved conveyor belts are subject to periodic audits by MSHA to determine conformity with the technical requirements upon which the approval was based. Under the final rule, MSHA will select representative conveyor belts to be audited and, upon request, the approval holder may obtain any final audit report.

One commenter asked if the audit procedures would be applied equally to domestic and foreign manufacturers who are approval holders. As MSHA stated during the public hearings, all approval holders will be held to the same approval and audit procedures, regardless of location.

Other commenters stated that the proposal would only allow the approval holder to receive the final post-approval product audit report upon request to MSHA. They stated that the distribution of similar reports involving respirators are published and distributed by NIOSH to the mining industry, and believed audit reports should be distributed, or at least made available, to the entire industry. Commenters added that they would also like to have these reports provided to the representative of miners and the operator be required to post a copy on the mine bulletin board. MSHA conducts post-approval product audits under other existing regulations, such as § 7.8(a), and consistent with both the proposal and the final rule, provides copies to the approval holders upon their request. The Agency has not experienced any problems or issues with the existing regulations, and the final rule is the same as the proposal. In the event there is a discrepancy between the manufactured product and the technical requirements upon which the approval is based, the approval holder would have to rectify the discrepancy and meet the requirements in this final rule.

Final § 14.10(b), like the proposal, requires that no more than once a year, except for cause, the approval holder, at MSHA's request, make 3 samples of an approved conveyor belt of the size specified in § 14.5 available to MSHA for an audit at no cost to MSHA. The final rule also allows representatives of the applicant and other persons agreed upon by MSHA and the applicant to be present during audit tests and evaluations; however, if MSHA receives a request from others to observe tests, the Agency will consider it.

Commenters stated that the representative of miners should be given an opportunity to be present during any testing or audit conducted by the Agency. The Agency agrees with the comments that requests to observe tests should be considered under the same conditions as explained in final § 14.3, which is designed to protect proprietary rights of approval holders and not delay the audit process.

Final § 14.10(c), like the proposal, provides that conveyor belts will be subject to audit for cause at any time MSHA believes the product is not in compliance with the technical requirements of the approval. Audits allow MSHA to determine whether products are being manufactured as approved. MSHA will select the product and may obtain products from sources other than the manufacturer, such as distributors or wholesalers.

In determining which products to audit, MSHA will consider a variety of factors such as whether the manufacturer has previously produced the product or similar products, whether the product is new or part of a new product line, or whether the product is intended for a unique application or limited distribution. MSHA may also consider product complexity, the manufacturer's previous product audit results, extent of the product's use in the mining community, and the time elapsed since the last audit or since the product was first approved.

There are other circumstances or causes when additional audits may be necessary to verify compliance with this final rule. These include complaints about the safety or performance of a product, product changes that have not been approved, audit test results that warrant further testing to determine compliance, and evaluation of corrective action taken by an approval holder. Some commenters supported these audit procedures but insisted that a prompt notice of the findings of such audits be made available to all interested parties, including the miners' representatives. In the event that an audit finds a discrepancy between the manufactured product and the technical requirements upon which the approval is based, requirements contained in § 14.11 will be followed.

Final § 14.11, like the proposal, includes requirements for revocation. Final § 14.11(a)(1) and (2), like the proposal, provides that MSHA may revoke for cause an approval issued under the final rule if the conveyor belt (1) fails to meet the technical requirements of the approval, or (2) creates a danger or hazard when used in an underground coal mine. MSHA received no comments on the proposal.

Final § 14.11(b), like the proposal, provides that prior to revoking an approval, the approval holder will be informed in writing of MSHA's intention to revoke. Under the final rule, the notice will (1) explain the reasons for the proposed revocation; and (2) provide the approval holder an opportunity to demonstrate or achieve compliance with the product approval requirements.

Commenters suggested that if MSHA issues a revocation notice, other means besides the internet be used, since not all mine operations and miners have access to the internet. MSHA's existing practice is to notify the mining community of equipment and safety alerts by various means, including the internet, the Agency's district offices and inspectors, and occasionally, via mail.

Final § 14.11(c), like the proposal, provides that upon request, the approval holder will be given the opportunity for a hearing. MSHA's practice is to treat approval holders as ''licensees'' under the Administrative Procedure Act (APA, 5 U.S.C. 558). Consistent with this practice, final § 14.11(b) provides that approval holders be given due process considerations prior to revocation of an approval. These considerations include being provided with (1) a written notice of the Agency's intent to revoke a product approval; (2) an explanation of the reasons for the proposed revocation; and (3) an opportunity to demonstrate or achieve compliance with the technical requirements for approval. Commenters suggested that if a hearing is held, miners and their representatives should be able to participate. The administrative procedures for revocation hearings, including participation, will be determined on a case-by-case basis consistent with requirements contained in the APA.

Final § 14.11(d), which is changed from the proposal, requires that if a conveyor belt poses an imminent danger to the safety or health of miners, an approval may be immediately suspended without written notice of the Agency's intention to revoke.

Commenters suggested that MSHA reconsider the proposal since the immediate suspension of conveyor belt approval necessitating removal of conveyor belt could pose serious operational difficulty for mine operators and their employees. They suggested that MSHA develop an expedited procedure to validate any concerns identified and to establish a manageable approach to expeditiously remedy such concerns. The commenters stated that district managers should have the authority to approve alternative approaches to ''immediate removal.'' Such approaches could establish agreed upon safety precautions permitting miners to remain at work during a conveyor belt removal/replacement cycle.

This final requirement would only be applicable in the event that MSHA discovers during an audit that a conveyor belt poses an imminent danger to miners. However, MSHA believes that it is unlikely that an audit would result in a massive recall of conveyor belt. Under the final rule, MSHA intends that the severity of the hazard identified in the audit would dictate the corrective action required. MSHA believes that, should revocation of an approval become necessary, the Agency will be able to develop procedures that will allow any identified defect to be remedied while maintaining safety and health protection for miners.

Consistent with the Agency's existing practice, revocation of an approval, as the commenter suggests, is a very serious action, taken only to correct a condition likely to cause death or serious physical harm. MSHA's existing regulations in Parts 7 and 15 provide that the Agency may suspend an approval without written notice, if there is an imminent danger to miners, pending completion of revocation procedures. The final rule is changed to provide that in the case of an imminent danger to miners, the approval may be immediately suspended. This is consistent with MSHA's other approval regulations.

MSHA believes that removal of belts that pose an imminent danger is necessary to protect miners from potential injury and life-threatening hazards. Once an approval is suspended, MSHA will notify the mining community of this action.

Final § 14.20, like the proposal, requires that conveyor belts for use in underground coal mines be flame resistant and tested under final § 14.20 (a) or (b). Under final paragraph (a), testing must be in accordance with the flame test specified in final § 14.22. Under final paragraph (b), testing must be in accordance with an alternate test determined by MSHA to be equivalent under existing § 6.20 and final § 14.4(e). This testing would assure that conveyor belts meet the specifications in the final rule, are difficult to ignite, and are highly resistant to flame propagation. MSHA recognizes that other tests may exist or be developed in the future which could be appropriate for evaluating flame-resistant qualities of conveyor belt for use in underground coal mines. Under final paragraph (b), once a determination of equivalency is made, MSHA will publish a notice in the **Federal Register**. MSHA received no comments on the proposal.

Final § 14.21, like the proposal, describes the principal parts of the BELT apparatus used to test for flame resistance of conveyor belts. Final § 14.21(a), like the proposal, requires a horizontal test chamber 66 inches (167.6 cm) long by 18 inches (45.7 cm) square (inside dimensions). The chamber dimensions were established from the large-scale belt flammability studies. The test chamber must be constructed from 1 inch (2.5 cm) thick Marinite I®, or equivalent insulating material. Should minor cracking occur in the Marinite I®, it can be repaired using an appropriate sealant. However, the Marinite I® or equivalent insulating material must be replaced and not repaired if the crack or break is across the total thickness. MSHA received no comments on the proposal.

Final § 14.21(b), like the proposal, requires a 16-gauge (0.16 cm) stainless steel duct section, tapering over at least a 24-inch (61 cm) length from a 20-inch (51 cm) square cross-sectional area at the test chamber connection to a 12-inch (30.5 cm) diameter exhaust duct, or equivalent. The interior surface of the tapered duct section must be lined with ½-inch (1.27 cm) thick ceramic blanket insulation or equivalent insulating material. The use of stainless steel minimizes corrosion and the tapered duct section allows a smooth airflow to enter the exhaust duct. The tapered duct must be lined with ceramic blanket insulation to minimize high duct temperatures and thermal expansion. MSHA received no comments on the proposal.

Final § 14.21(c), like the proposal, requires a U-shaped gas-fueled impinged jet burner igniting source, measuring 12 inches (30.5 cm) long and 4 inches (10.2 cm) wide, with two parallel rows of 6 jets each. Each jet must be spaced alternately along the U-shaped burner tube. The 2 rows of burner jets must be slanted so that they point toward each other and the flame from each jet impinges upon each other in pairs. The burner fuel must be at least 98 percent methane (technical grade) or natural gas containing at least 93 percent methane.

A burner unit available from the Solarflo® Corporation Model U–10, using Model Number 640 jets producing 7,500 BTU per hour per jet, is suitable to comply with these specifications. This burner unit, which is an impinged jet burner, is the burner type used as the igniting source in the BELT. Any other burner unit which meets the specifications would be appropriate. The burner in the final rule was referenced because it is commercially available and provides a reliable, reproducible ignition source that can burn methane or natural gas. The BELT results correlate well with the large-scale belt flammability test results when using the burner in the final rule and gaseous fuel in conjunction with the other parameters. MSHA received no comments on the proposal.

Final § 14.21(d), like the proposal, requires a removable steel rack, consisting of 2 parallel rails and supports that form a 7 ± ⅛ inches (17.8 ± 0.3 cm) wide by 60 ± ⅛ inches (152.4 ± 0.3 cm) long assembly to hold a belt sample. Under final paragraph (d)(1), like the proposal, the 2 parallel rails, with 5 ± ⅛ inches (12.7 ± 0.3 cm) space between them comprise the top of the rack. The rails and supports must be constructed of slotted angle iron with holes along the top surface. Typically, commercially available, 1 inch (2.5 cm) by 1¾ inch (4.4 cm) by ⅛ inch (0.3 cm) thick angle iron with predrilled ¼ inch (0.6 cm) diameter holes spaced 1 inch (2.5 cm) apart is used. Under final paragraph (d)(2), the top surface of the rack must be 8 ± ⅛ inches (20.3 ± 0.3 cm) from the inside roof of the test chamber.

The rack materials and dimensions were selected so that the rack adequately supports the belt sample and withstands repeated tests with only minor warping due to heat while minimizing the rack's thermal mass. The distance from the top surface of the rack to the inside roof of the test chamber was established based on the comparison of the test results and the development of correlation parameters with the large-scale belt flammability studies.

The BELT apparatus does not contain any pollution control system for exhaust fumes created during flame tests. If an applicant chooses to build a test apparatus and perform the BELT method for research or quality assurance purposes, some type of effluent control may be required to meet State and local

emission standards. MSHA received no comments on the proposal.

Final § 14.22, like the proposal, specifies the test for flame resistance of conveyor belts. The final rule addresses variables that have an appreciable effect on the test results in order to maintain consistency in the testing method. Small changes in barometric pressure, humidity, and ambient temperature should not have a significant effect on the test results. Published literature indicates that small changes in atmospheric pressure have little or no effect on flame propagation. Variations in ambient temperature did not show a trend in either decreasing or increasing the burn damage of belts tested. A small increase or decrease of relative humidity will not have a significant effect on the flame propagation because conveyor belts are typically impervious to moisture.

Final § 14.22(a), like the proposal, specifies the test procedure sequence. Technical dimensions and tolerances that are critical to the proper conduct of the test and to maintain consistency in the test method are specified in this final rule, while dimensions that have no effect on the test results are specified without a tolerance and are indicated as approximate. MSHA received no comments on the proposal.

Final § 14.22(a)(1), like the proposal, requires that three belt samples, 60 ± ¼ inches (152.4 ± 0.6 cm) long by 9 ± ⅛-inches (22.9 ± 0.3 cm) wide, be laid flat at 70 ± 10 °F (21 ± 5 °C) for at least 24 hours prior to the test. It assures that the samples are at laboratory temperatures, facilitates sample mounting, and minimizes curling during the test. MSHA received no comments on the proposal.

A conveyor belt that has been rolled prior to testing is more likely to rebound to the rolled position during testing. This action is considered curling, and may lead to erroneous test results. Samples which have been rolled prior to testing can develop sufficient curling forces to overcome the holding capabilities of the cotter pins installed to retain the sample on the rack. Should curling occur, MSHA would need to test additional samples in order to assure that reliable test results have been obtained. The Agency has determined that the use of flat, unrolled samples greatly reduces the occurrence of curling.

Final § 14.22(a)(2), like the proposal, requires that for each of three tests, one belt sample be placed on the rails of the rack with the load carrying surface facing up so that the sample extends 1 ± ⅛ inch (2.5 ± 0.3 cm) beyond the front of the rails and 1 ± ⅛ inch (2.5 ± 0.3 cm) from the outer lengthwise edge of each rail. This centers the longitudinal axis of the sample along the centerline of the rack with the first inch of the sample in the ignition area and not in contact with the rack. The 1 ± ⅛ inch (2.5 ± 0.3 cm) overlap that extends beyond the front of the rail facilitates ignition of the belt sample by minimizing the thermal heat sink created by the sample rack. A greater overlap can result in the sample curling or pulling back from the burner during the ignition period. Many PVC belts are constructed with a solid woven carcass and the top or bottom cover is not designated. If a belt is constructed without a designated top cover, either side of the belt could be mounted as the load carrying surface. MSHA received no comments on the proposal.

Final § 14.22(a)(3), like the proposal, requires the sample to be fastened to the rails of the rack with steel washers and cotter pins. The final rule provides the following requirements. The cotter pin must extend at least ¾ inch (1.9 cm) below the rails. Equivalent fasteners may be used. A series of 5 holes approximately 9/32 inch (0.7 cm) in diameter must be made along both edges of the belt sample, starting at the first rail hole within 2 inches (5.1 cm) from the front edge of the sample. The next hole must be made 5 ± ¼ inches (12.7 ± 0.6 cm) from the first, the third hole must be made 5 ± ¼ inches (12.7 ± 0.6 cm) from the second, the fourth hole must be made approximately midway along the length of the sample, and the fifth hole must be made near the end of the sample. A washer must be placed over each sample hole, and a cotter pin must be inserted through the hole and spread apart to secure the sample to the rail. MSHA received no comments on the proposal.

Under the final rule, the locations of the fasteners were chosen so that the majority (6 of 10) would be in the ignition area to minimize the belt sample pulling away from the burner, or lifting and curling during the ignition period. Specific fastener locations with tolerances for holes 4 and 5 were not identified. It is MSHA's experience that the exact location of these fasteners is not critical to the retention of the sample and does not influence the test results. Additional fasteners can be used in the ignition region for belts that lift excessively. The fasteners facilitate the secure mounting of the belt sample and are too small to influence the test results by heat absorption, even if additional fasteners are used.

Final § 14.22(a)(4), like the proposal, requires centering the rack and sample in the test chamber with the front end of the sample 6 ± ½ inches (15.2 ± 1.27 cm) from the entrance. This location reduces the disturbance of the airflow entering the test chamber. The location is based on the correlation of the BELT results to the results of large-scale belt flammability studies. MSHA received no comments on the proposal.

Final § 14.22(a)(5), like the proposal, requires measuring the airflow with a 4-inch (10.2 cm) diameter vane anemometer, or equivalent device, placed on the centerline of the belt sample 12 ± ½ inches (30.5 ± 1.27 cm) from the entrance of the chamber. Airflow passing through the chamber must be adjusted to 200 ± 20 ft/min (61 ± 6 m/min). MSHA received no comments on the proposal.

The airflow and measuring location are based on comparison of the test results with the large-scale belt flammability studies. MSHA identified the variables that affect the conditions of the test, such as air velocity and the ambient air and tunnel temperatures while conducting several hundred belt flame tests.

Final § 14.22(a)(6), like the proposal, requires that, before starting the test on each sample, the inner surface temperature of the chamber roof be measured at points 6 ± ½, 30 ± ½, and 60 ± ½ inches (15.2 ± 1.27, 76.2 ± 1.27, and 152.4 ± 1.27 cm) from the front entrance must not exceed 95° Fahrenheit (35° Centigrade) at any of these points with the specified airflow passing through the chamber. In addition, the temperature of the air entering the chamber during the test on each sample must not be less than 50° Fahrenheit (10° Centigrade).

Under the final rule, the ½ inch (1.27 cm) tolerance is needed for the temperature measurement points to maintain consistency of the test conditions. These temperature limits are specified to maintain the repeatability of the test results and to maintain the comparability obtained with the large-scale belt flammability studies. An upper limit on airflow and a lower limit on the temperature of the air entering the test chamber are included as test control parameters. These test parameters are designed to assure the test chamber temperature meets certain restrictions for each of the three tests. MSHA received no comments on the proposal.

Final § 14.22(a)(7), like the proposal, requires centering the burner in front of the sample's leading edge with the plane, defined by the tips of the burner jets, ¾ ± ⅛ inch (1.9 ± 0.3 cm) from the front edge of the belt. The burner must be centered in front of the sample's leading edge, so that when ignited the

flames from the two rows of jets impinge in front of the belt's edge and distribute uniformly on the top and bottom surfaces of the sample. A ⅛ inch tolerance was added to the location dimension for the burner jets. This tolerance is important because it maintains the consistency of the test method. The alignment of the burner provides for the uniform heating of the sample, which is necessary to maintain the consistency of the test results.

The exact burner orientation needed to provide uniform distribution of flame on the top and bottom surfaces of the test sample may vary depending upon the belt sample's thickness. Based upon comparison tests and experience gained in developing the BELT method, the burner must be slanted downward from the vertical, at approximately a 15° angle, and located ¾ ± ⅛ inch (1.9 ± 0.3 cm) from the front edge of the belt. Slanting of the burner compensates for the buoyancy of the burner flames. The appropriate burner alignment necessary for uniform distribution of flame may be determined by adjustments prior to igniting the samples under test. MSHA received no comments on the proposal.

Final § 14.22(a)(8), like the proposal, requires that, with the burner lowered away from the sample, the gas flow to the burner must be set at 1.2 ± 0.1 standard cubic feet per minute (SCFM) (34 ± 2.8 liters per minute) and be maintained throughout the 5 to 5.1 minute ignition period. One standard cubic foot is the amount of gas which occupies one cubic foot at 72 °F and one atmosphere pressure (1 cubic liter at 22 °C and 101 kilopascals). The specified gas flow provides a stable flame and is based on a comparison of the test results with the large-scale belt flammability studies. MSHA received no comments on the proposal.

Final § 14.22(a)(9), like the proposal, provides that after applying the burner flame to the front edge of the sample for a 5 to 5.1 minute ignition period, lower the burner away from the sample and extinguish the flame. MSHA received no comments on the proposal.

Final § 14.22(a)(10), like the proposal, provides that after the completion of each test, the undamaged portion across the entire width of the sample be determined. Determining the undamaged portion across the entire width of the sample is necessary for specifying acceptable performance of the conveyor belt. Blistering without charring does not constitute damage because blistering could result from heat exposure rather than the presence of flame. MSHA received no comments on the proposal.

Final § 14.22(b), like the proposal, requires that each tested sample must exhibit an undamaged portion across its entire width. This requirement is based on the correlation of the BELT results to the results of large-scale belt flammability studies. MSHA received no comments on the proposal.

Final § 14.22(c), like the proposal, provides that MSHA may modify the procedures of the flammability test for belts constructed of thicknesses more than 3/4 inch (1.9 cm). No comments were received on this provision.

Final § 14.23, like the proposal, provides that MSHA may approve a conveyor belt that incorporates technology for which the requirements of this final rule are not applicable if the Agency determines that the conveyor belt is as safe as those which meet the requirements of the final rule. This final rule is intended to facilitate the introduction of new technology or new applications of existing technology with respect to conveyor belts. MSHA received no comments on the proposal.

Part 75—Mandatory Safety Standards—Underground Coal Mines Subpart L—Fire Protection

Final § 75.1108 requires the use of improved flame-resistant conveyor belt, as approved under Part 14, in underground coal mines. This requirement is consistent with Panel Recommendation 3.

Final § 75.1108(a) is changed from the proposal and allows mine operators until December 31, 2009 to place in service in underground coal mines conveyor belts approved under Part 14 or accepted under existing Part 18.

Final § 75.1108(b) is changed from the proposal and requires that effective December 31, 2009, conveyor belts placed in service must be approved under Part 14. In the event that MSHA determines that Part 14 approved belt is not available, the Agency will consider an extension of the one-year transition period. Notice of an extension would be published in the **Federal Register**.

Final § 75.1108(c) is added in the final rule in response to comments and to clarify the Agency's intent with respect to the use of existing conveyor belt. It requires that effective December 31, 2018, all conveyor belts used in underground coal mines must be approved under Part 14.

Commenters were opposed to permitting the purchase of either Part 18 or Part 14 belt for a period of one year because mine operators could stockpile Part 18 belt, and use that belt underground for an extended period of time. They stated that Part 14 belt should be required to be purchased and installed in the mine upon the effective date of the final rule. These commenters stated that mine operators should only be permitted to use Part 18 belts already in service or in their inventory.

In response to comments, MSHA included a new paragraph in the final rule that clarifies the Agency's intent with respect to the use of existing belt. Under the final rule, operators will have up to ten years to use existing belt, which has been placed into service by December 31, 2009. This assures that all belt used in underground coal mines will meet the requirements of Part 14 within ten years.

The final rule language also has been changed from the proposal to include the phrase, ''placed in service'' instead of ''purchased for use.'' The Agency intends that ''placed in service'' clarifies that all new conveyor belts installed one year after the publication date of this final rule will comply with Part 14 requirements.

A commenter stated that mine operators should be permitted to continue to remove belts, trim them down, and re-install the belt in their underground mines. Under the final rule, mine operators may continue these practices if the belts have been placed in service in their mines prior to or during the one-year transition period, that is, the one-year period when either Part 18 or Part 14 belt may be purchased. Belts that have been placed in service prior to or during the one-year transition period can be used until December 31, 2018. This belt may not be marketed for use in other underground coal mining operations after December 31, 2009, but may be used by the same mine operator.

Existing § 75.1108–1 is removed because it is no longer needed.

3. Conforming Amendments

This final rule requires conforming amendments to existing approval regulations in Parts 6 and 18.

Part 6—Testing and Evaluation by Independent Laboratories and Non-MSHA Product Safety Standards

Section 6.2 concerning the definition of ''Equivalent non-MSHA product safety standards,'' and § 6.20(a)(1) concerning applications for equivalency, are both amended by adding Part 14 (Conveyor Belts in Underground Coal Mines). These are administrative and conforming provisions.

Part 18—Electric Motor-Driven Mine Equipment and Accessories

Part 18 is amended by removing the term ''conveyor belt'' from existing

§§ 18.1, 18.2, 18.6(a), 18.6(i), 18.9(a) and 18.65. The revised sections of Part 18 would only relate to acceptance of hoses, and existing § 18.6(c) would be removed and reserved. MSHA is making these conforming amendments to Part 18 because applications for approval of conveyor belts will be considered only under Part 14.

B. Fire Prevention and Detection and Approval of the Use of Air From the Belt Entry To Ventilate Working Sections

1. General

This final rule enhances miner safety and health by including improved requirements for the use of air from the belt entry, belt entry and conveyor maintenance, and fire prevention and detection. This final rule includes requirements on: Approval of using air from the belt entry to ventilate working sections; replacement of point-type heat sensors with carbon monoxide sensors in all coal mines; training of AMS operators; requirements for escapeways; limits on respirable dust in the belt entry; maximum and minimum air velocities in the belt entry; standardized tactile signals for lifelines; use of smoke sensors in mines using air from the belt entry; and improved belt entry maintenance.

Consistent with the Panel's recommendations this final rule, like the proposal, includes requirements applicable to mines that use air from the belt entry to ventilate a working section, and requirements applicable to all underground coal mines. The requirements applicable to all underground coal mines include: Airlocks along escapeways; minimum belt entry air velocity; standardized tactile signals for lifelines; maintaining higher ventilating pressures in the primary escapeway; replacing point-type heat sensors with carbon monoxide sensors for fire detection in belt entries; and belt entry maintenance.

In addition, this final rule, like the proposal, revises existing requirements related to the use of carbon monoxide sensors for fire detection along belt lines in all mines. These include sensor spacing, establishing a warning level, responses to warning and malfunction signals, testing and calibration requirements, and minimum air velocity to incorporate the use of carbon monoxide sensors.

This section of the final rule addresses the following Panel recommendations:

- Recommendation 5—Belt entry and conveyor belt maintenance;
- Recommendation 6—Special requirements for the use of belt air;
- Recommendation 7—Belt air approval recommendation;
- Recommendation 8—Discontinuing point-type heat sensors;
- Recommendation 9—Smoke sensors;
- Recommendation 10—Use of diesel-discriminating sensors;
- Recommendation 12—AMS operator training certification;
- Recommendation 13—Minimum and maximum air velocities;
- Recommendation 14—Escapeways and leakage;
- Recommendation 15—Lifelines;
- Recommendation 16—Point-feeding; and
- Recommendation 17—Respirable dust.

2. Discussion of the Final Rule

Part 48—Training and Retraining of Miners Subpart B—Training and Retraining of Miners Working at Surface Mines and Surface Areas of Underground Mines

Final § 48.27(a), like the proposal, revises the existing rule to require that miners assigned to new work tasks as AMS operators be trained before they perform these duties. This requirement is consistent with Panel recommendation 12, that MSHA require the qualification and certification of AMS operators. This requirement applies to AMS operators that are monitoring methane or carbon monoxide sensors used to meet the requirements of: §§ 75.323(d)(1)(ii)—Actions for excessive methane; 75.340(a)(1)(ii) and 75.340(a)(2)(ii)—Electrical installations; 75.350(b) and 75.350(d)—Use of air from a belt entry to ventilate working sections; or 75.362—On-shift examinations. MSHA believes that AMS operators must have the background, experience, and training to assure that proper actions are taken in response to AMS signals, including alerts, alarms, and malfunctions, to provide the highest degree of safety to all affected miners.

Existing § 48.23 requires that a training plan be approved by MSHA for specific tasks, and that the training be provided prior to the miner performing those tasks. The Agency has added AMS operators to the list of tasks covered by this provision.

A commenter stated that AMS operators should participate in a simulated mine emergency as part of the initial training. While mine operators may elect to include a simulated mine emergency in the initial task training for AMS operators, the final rule does not require simulated mine emergency training. The responsible person designated under existing § 75.1501 is required to take charge during a mine emergency. That person must be trained annually in a course of instruction in mine emergency response.

Another commenter stated that this task training duplicates the annual training already required for AMS operators and qualified persons. Under the final rule, the initial task training and annual retraining are separate requirements. The initial task training is designed to assure that the AMS operator has the necessary skills to operate the AMS prior to assuming responsibility for that task. The annual retraining in § 75.351(q) is designed to reinforce existing skills and to assure that the AMS operator remains capable of doing the task, with an understanding of current mining operations.

Part 75—Mandatory Safety Standards—Underground Coal Mines

Subpart B—Qualified and Certified Persons

Section 75.156—AMS Operator, Qualifications

Final § 75.156(a), like the proposal, is new and requires that to be qualified as an AMS operator, a person shall be provided with task training on duties and responsibilities at each mine where an AMS operator is employed in accordance with the mine operator's approved Part 48 training plan. This requirement is consistent with Panel recommendation 12, that MSHA require the qualification and certification of AMS operators.

MSHA recognizes that a significant portion of the knowledge necessary for an AMS operator is mine-specific and must be tailored to conditions at each mine. This task training must be provided at each mine where the AMS operator performs these duties due to different AMS designs, variations in ventilation plans and systems, complexities of evacuation plan requirements, and uniqueness of the mine configurations. MSHA has developed a training guide to assist mine operators in identifying essential elements to be included in the training plan.

A commenter stated that this training should not be included with the Part 48 annual retraining. This commenter was concerned about diluting the Part 48 training and wanted the AMS operator training to be separate.

A commenter asked if MSHA would develop an initial training program for AMS operators. A commenter also stated that a copy of the initial training plan should be furnished to miners or a representative of miners two weeks

before its submission to the district manager.

The new initial task training for AMS operators does not impact other existing training requirements in Part 48. MSHA has developed a model training program that mine operators can tailor to fit specific mining conditions and equipment at their mines. Consistent with existing § 48.23(d), mine operators must furnish a copy of the training plan to a miner's representative two weeks prior to its submission to the district manager.

Final § 75.156(b), like the proposal, requires that an AMS operator must be able to demonstrate to an authorized representative of the Secretary that he/she is qualified to perform the assigned tasks. The inspector will make a determination about the AMS operator's qualifications during regular inspections. In making this determination, the inspector will ask the AMS operator questions regarding: The responses to AMS signals; notification requirements; approved mine plans; recordkeeping requirements; and AMS operating requirements. This assures that the AMS operator fully understands how to operate and respond to the AMS.

Subpart D—Ventilation

Actions for Excessive Methane

During the rulemaking process and at each of the public hearings, MSHA solicited comments on whether the Agency should establish a new provision to require that changes or adjustments be made to reduce the concentration of methane when a range between 0.5 and 1.0 percent methane is present in the belt entry as measured 200 feet outby the section loading point. In addition, MSHA specifically requested comments on the level at which changes or adjustments should be made. MSHA received no comments regarding a specific level at which changes or adjustments should be made.

The Agency's request for comments was based on Panel Recommendation 18, which stated that the district manager should regularly evaluate any working section that has methane readings at or above 0.5% methane, measured 200 feet outby the tailpiece of the belt. This recommendation applied only to mines that use air from the belt entry to ventilate working sections.

A commenter agreed with the Panel's recommendation and supported a new standard to require that corrective actions be made when methane levels range between 0.5 and 1.0 percent, measured 200 feet outby the section loading point. This commenter did not recommend a specific level, but did state that methane levels should be reduced to the lowest possible level.

Several commenters were opposed to a new standard stating that existing standards, combined with methane limits and tests already in place for the working section, provide adequate protection. Commenters also stated that any attempt to reduce methane concentrations in the belt entry below 1.0 percent could create undesired pressure differentials from the belt entry to the intake air course. MSHA agrees that this may be true for blowing ventilation systems, but not for exhausting ventilation systems.

Further, according to commenters, adjustments to reduce the methane concentration in the belt entry to a range below 0.5 to 1.0 percent may not be possible because intake methane levels up to 1.0 percent are permitted. MSHA notes that existing standards require that when 1.0 percent or more methane is present in the belt entry, changes or adjustments must be made to reduce the concentration to less than 1.0 percent.

Consistent with the Panel's recommendation, MSHA is not including a new standard in the final rule, but intends to change the Agency's inspection procedures to require that inspectors measure methane in the belt entry at a point 200 feet outby the section tail piece. This will allow the Agency to determine the effect of the use of air from the belt entry on methane levels in the working section.

The Agency recognizes that moving air from the intake to the belt may reduce the methane concentration 200 feet outby the section loading point, but may not result in reduced methane concentrations on the working section because the total air quantity delivered to the section will not be increased.

Section 75.333(c)(4)—Ventilation Controls

Final § 75.333(c)(4), like the proposal, is a new provision requiring that an airlock be established where the air pressure differential between air courses creates a static force exceeding 125 pounds on closed personnel doors along escapeways.

The final rule is responsive to Panel Recommendation 14 that personnel doors along escapeways should be installed to establish an airlock when the static force created by the pressure differential exceeds 125 pounds. High pressure differentials on doors can lead to serious injuries to miners opening and closing these doors. Providing an airlock between entries provides a safe means for miners to travel between two air courses. An airlock consists of a pair of doors installed in ventilation controls between two air courses, which form a pressure equalizing chamber. A miner would open the first door, enter the airlock, and close the door. After equalizing the pressure, the miner can then open the second door and move into the adjacent entry. The need for safe access is critical during a mine emergency evacuation when miners must move between adjacent air courses.

The Panel recommended a standard based upon the force on the personnel door of 125 pounds. This force on any specific door is dependent upon the pressure differential across the ventilation control, and the surface area of the personnel door. For the same pressure differential, the force required to open a personnel door increases proportionately with surface area.

In order to calculate the force exerted by a pressure differential, the pressure differential and door dimensions must first be determined. As reflected in the Panel's example, a 125-pound force limitation on a 3-foot by 4-foot door would be created by a pressure differential of 2.0 inches of water. A 3-foot by 4-foot personnel door has an area of 1,728 square inches ($3' \times 4' = 12$ square feet $\times$ 144 in^2/ft^2 = 1,728 square inches). For a force of 125 pounds, the distribution is 0.0725 pounds per square inch (125 lb $\div$ 1,728 in^2 = 0.0725 psi). Using the conversion factor, 1 psi = 27.68 inches of water, the equivalent pressure differential can be calculated to be 2.0 inches of water (0.0725 psi $\times$ 27.68 in. H_2O/psi = 2.0 inches of water).

A commenter supported the proposal to require airlocks, but suggested spacing the airlocks at intervals not to exceed 1,000 feet for the entire length of the escapeway from the section to the surface. Consistent with the Panel recommendation, MSHA believes that airlocks should only be required when the force on a personnel door between air courses along escapeways could result in injury to miners when opening or closing the door. If the force is less than 125 pounds, miners should not experience difficulty opening or closing the door. Requiring airlocks on doors with lower pressures would unnecessarily delay miners in moving between escapeways.

Some commenters suggested the proposal be modified to allow the use of alternative measures such as flaps and sliders to comply with the proposed requirement for airlocks. Another suggested that airlocks only be required when alternatives such as hinged or sliding doors or flaps do not reduce the force on the door to less than 125 pounds. In the preamble to the proposal, MSHA stated mine operators may have

alternatives to establishing airlocks, including reducing the size of a personnel door, providing a flap, or sliding door, which may reduce the static pressure to below 125 pounds. Under the final rule, the Agency will allow alternatives to reduce the force on a door. Airlocks are only required when the force exceeds 125 pounds. Mine operators have the option to use alternatives to reduce the force on a door.

A commenter suggested that the final rule should state that airlocks only be required between adjacent escapeways when the force on the door exceeds 125 pounds. However, such a change would not be consistent with the Panel's recommendation. In the final rule, MSHA intends that airlocks be established where the air pressure differential between air courses along escapeways creates a static force exceeding 125 pounds on closed personnel doors.

During the rulemaking process and at the public hearings, the Agency solicited comments on other suitable pressures. No comments were provided. MSHA also solicited comments on the number of airlocks that would be required under the proposal and the associated cost. One commenter provided data from 14 mines, which identify the number of airlocks required in each mine based upon the proposed rule. MSHA has considered this comment in the regulatory economic analysis.

Section 75.350—Belt Air Course Ventilation

Final § 75.350(a)(2), like the proposal, revises the existing standard. It requires that one year after the publication of the final rule, the air velocity in the belt entry must be at least 50 feet per minute. It also requires that air velocities be compatible with all fire detection systems and fire suppression systems used in the belt entry.

MSHA has revised the existing standard because of changes to final § 75.1103–4 (fire detection systems), which replaces point-type heat sensors for early-warning and detection of conveyor belt fires with carbon monoxide fire sensor systems in all belt entries. When point-type heat sensor systems are used for fire detection, no minimum velocity in the belt entry is needed because the sensors are heat-activated. When carbon monoxide sensors are used, a minimum air velocity of 50 feet per minute is necessary to assure that carbon monoxide gas produced by a fire will be carried by the air current to the downwind sensors in a timely manner. This minimum velocity has been required for over two decades in mines using carbon monoxide sensors for fire detection, and has been shown to provide effective early warning.

The final rule, like the proposal, allows mine operators to request lower velocities in the ventilation plan in areas where the minimum velocity cannot be maintained. Where the district manager approves such a plan, carbon monoxide sensor spacing would have to be reduced to no greater than 350 feet. NIOSH research and Agency experience show that the reduced spacing is necessary to assure carbon monoxide resulting from a fire more quickly reaches downwind sensors.

Commenters questioned where and how MSHA would make air velocity measurements under the proposal. Consistent with existing inspection procedures, MSHA uses representative cross-sectional areas when determining air velocities. Large areas (such as belt channels, boom holes, and fall areas) and restricted areas (such as overcasts) are not representative and would not be used to determine air velocities.

Another commenter supported the proposal but stated that the district manager should conduct an investigation, including a ventilation survey, prior to approving a lower velocity in the ventilation plan. Prior to approving changes in the ventilation plan, the district manager receives recommendations from inspectors, supervisors and specialists who are familiar with specific conditions in the mine. The district manager can also direct that further investigation or review be made at the mine which could include an underground ventilation survey. However, the Agency does not believe it is necessary to conduct an underground investigation in all cases and has not included such a requirement in the final rule.

Final § 75.350(b), like the proposal, revises the existing standard. It provides that the use of air from a belt air course to ventilate a working section be permitted only when evaluated and approved by the district manager in the ventilation plan. It requires the mine operator to provide justification in the plan that the use of air from the belt entry affords at least the same measure of protection as where belt haulage entries are not used to ventilate working places.

This final rule addresses Panel Recommendation 7, which states that MSHA should evaluate, as part of the approval of the mine ventilation plan, the safety of the use of air from the belt entry to ventilate working sections. The Panel further stated that the district manager must take special care to evaluate whether the air from the belt entry can be routed to the working face in a manner that is safe for all miners involved.

The final rule has been changed from the proposal to reduce to two months the time allowed for mine operators currently using air from the belt entry to submit a revised ventilation plan to the district manager. This change was made in response to commenters and to clarify MSHA's intent that mine operators submit their revised ventilation plans as soon as feasible after the final rule becomes effective. MSHA believes that the two-month period allows adequate time.

The Agency will approve ventilation plans and revisions that assure that the use of air from the belt entry to ventilate working sections affords at least the same measure of protection as where belt haulage entries are not used to ventilate working places. The district manager will notify the operator in writing of the approval or denial of approval of a proposed ventilation plan or proposed revision. The district manager will send a copy of this notification to the miners' representative. If the district manager denies approval of a proposed plan or revision, the district manager will notify the operator, in writing, of the deficiencies and the deadline for submitting the required information.

If the operator does not respond by the deadline, or if issues can not be resolved, the district manager will send a second letter notifying the operator: (1) That the plan has not been approved; (2) of the deadline for submitting any required information; and (3) that after that deadline, if the operator does not submit the required information, the plan will be revoked. If the operator does not submit the required information in response to the second letter, the district manager will send a letter notifying the operator that the plan is revoked.

Operating after the revocation date is a violation of the existing standard requiring an approved ventilation plan. A citation would be issued for failure to have an approved plan, as required by the existing ventilation standard.

During the rulemaking process and at the public hearings, MSHA solicited comments on this proposal. The Agency was particularly interested in comments related to circumstances in which the district manager does not approve the continued use of air from the belt entry to ventilate working sections.

A commenter stated that the use of air from the belt entry should not be

allowed. However, the commenter suggested that for consistency, the Assistant Secretary should review all plan revisions proposing the use of air from the belt entry. If the district manager makes the decision, the commenter recommended that MSHA develop criteria for plan approval that would hold mine operators to a higher standard. The commenter further stated that when the use of air from the belt entry is disapproved, its use should be discontinued immediately.

Other commenters supported the use of air from the belt entry to reduce methane levels, and stated that mines currently using that air to ventilate working sections should be allowed to continue. Some of these commenters also indicated that if the district manager decides to disapprove the use of air from the belt entry, a reasonable transition period should be allowed for the mine operator to make the necessary ventilation changes.

Mine ventilation plans are designed to reflect the specific conditions at each operation. The MSHA personnel most familiar with those mines—local mine inspectors, specialists and supervisors—possess the technical expertise and are in the best position to make recommendations concerning plan approvals. Consistent with the Panel's recommendation, MSHA believes that the district manager is the appropriate senior official to make plan approval determinations including whether air from the belt entry should be used to ventilate working sections. To facilitate consistency with respect to Agency policy, MSHA will develop criteria for district managers to use when granting approval for the use of belt air.

There are potential sources of fire in belt conveyor entries, and the use of air from the belt entry to ventilate working sections can result in contaminants from a fire being carried to the working section. However, the Agency recognizes that there may be compelling reasons to use air from the belt entry as an intake air source for the section. These reasons may include the need for additional ventilation to dilute methane, or the need for fewer entries to reduce ground control hazards.

The district manager may approve the use of air from the belt entry to ventilate the working section only in sections developed with three or more entries. Under existing standards, a petition for modification will be required for two-entry mine development to use air from the belt entry to ventilate the working section, and to operate the belt in the return air course. The final rule does not affect existing granted petitions for modification at two entry mines.

In the preamble to the proposal, the Agency indicated that when the district manager makes a determination that the use of air from the belt entry would no longer be permitted in the mine ventilation plan, continued use of that air would be permitted until completion of current mining. MSHA recognizes that a transition period may be necessary, and that some mines can implement the change more readily than others. In response to commenters, the district manager, as part of the plan approval process, will make a determination on the duration of this transition period based on the specific conditions at each mine.

Commenters also stated that the Agency should not allow the use of air from the belt entry to ventilate working sections until MSHA establishes standards, as part of the conveyor belt approval process, for smoke density and toxicity. The Agency recognizes that smoke density and toxicity can impact escape during a mine fire. To address these areas, MSHA issued a Request for Information to solicit input from the mining community and other interested parties (73 FR 35057). MSHA believes that the use of air from the belt entry to ventilate working sections can be made as safe as not using such air. As noted by the Panel, conditions such as high methane levels and deep ground cover can present serious safety concerns to miners. The use of air from the belt entry in these circumstances may result in a safer mine environment.

In 2006, a fatal fire occurred at the Aracoma Alma Mine No. 1 in West Virginia. Public comments made during this rulemaking implied that deficiencies in the ventilation methods and safety measures in place at Aracoma at the time of the fire were approved by MSHA in the ventilation plan.

However, the accident investigation revealed that the Aracoma mine was not ventilated as specified and required in the approved ventilation plan. In the accident report, MSHA identified 25 violations of safety standards as contributing to the accident. The Agency concluded that the two fatalities would have been prevented had the mine operator fully complied with MSHA standards.

Final § 75.350(b)(3), revises the existing standard. Paragraph (b)(3)(i), like the proposal, requires that the average concentration of respirable dust in the belt air course, when used as a section intake air course, must be maintained at or below 1.0 mg/m^3. Paragraph (b)(3)(ii), like the proposal, requires that where miners on the working section are on a reduced respirable coal mine dust standard that is below 1.0 mg/m^3, the average concentration of respirable dust in the belt entry must be at or below the lowest applicable respirable dust standard on that section. Paragraph (b)(3)(iii), like the proposal, requires that a permanent designated area (DA) for dust measurements must be established at a point no greater than 50 feet upwind from the section loading point in the belt entry when the belt air flows over the loading point or no greater than 50 feet upwind from the point where belt air is mixed with air from another intake air course near the loading point. The DA must be specified and approved in the ventilation plan.

Final § 75.350(b)(3) is consistent with Panel Recommendation 17. The Panel stated that respirable coal mine dust concentrations in the air coursed through a belt conveyor entry, and used to ventilate working sections, should be as low as feasible and must not exceed the existing standard of 1.0 mg/m^3. The Panel also stated that district managers should have the authority to require improvements in dust control in the belt entry if the dust concentration exceeds an 8-hour time-weighted average of 1.0 mg/m^3 or raises the concentration in that section above the exposure limit.

Reduced standards are frequently established on working sections due to presence of respirable quartz. The existing exposure limit for respirable coal mine dust is 2.0 mg/m^3 when quartz levels are five percent or less. This standard is reduced when respirable dust in the mine atmosphere contains more than five percent quartz. Reduced standards are computed by dividing the percent of quartz measured in the mine atmosphere into the number ten. For example, if the mine atmosphere contains 20 percent quartz, the reduced standard would be 0.5 mg/m^3 (10/20 = 0.5 mg/m^3). The purpose of a reduced standard is to limit miner exposure to respirable quartz.

The final rule, like the proposal, assures that the respirable coal mine dust exposure of miners on the working section would not be increased by the use of air from the belt entry. For example, if the standard for the continuous miner operator (the designated occupation) is 2.0 mg/m^3 and the reduced standard for the roof bolter on the same working section (a designated area) is 0.8 mg/m^3, the average concentration of respirable dust in the belt entry used to ventilate that working section must not exceed 0.8 mg/m^3. This is because 0.8 mg/m^3 is the lowest applicable respirable dust standard on the section.

If a mine operator is unable to effectively reduce the respirable dust

levels in the belt entry to meet this requirement, the district manager will have the authority to revoke the ventilation plan which allowed the use of air from the belt entry to ventilate the working section.

MSHA believes that technology is available to effectively lower respirable dust levels in the belt entry. Because a principal source of respirable dust is at belt transfer points, technologies such as improved water sprays may reduce dust concentrations. If a mine operator reduces the air velocity in the belt entry, this could result in less scouring and lower respirable dust concentrations. As the Panel indicated, the operator should implement improved engineering controls whenever possible, or use air from another intake air course.

During the rulemaking process and at each of the public hearings, the Agency solicited comments on the proposal. A commenter supported the proposal. Another commenter agreed with reducing dust concentrations, and stated that the dust concentration should be as low as feasible.

Another commenter requested that MSHA not include this proposal in the final rule because there is no scientific justification for reducing the intake content of air that does not contain quartz in excess of five percent. The commenter stated that there is no connection between the designated area in the belt area and areas on the working section where there would be a reduced standard.

Another commenter stated that the proposal was unnecessary because respirable dust samples must still be collected at the affected designated areas or designated occupations. This commenter stated that additional reduction of dust concentrations to less than 1.0 mg/m^3 should not be required unless sample results from the designated area or occupations indicate non-compliance with the existing standard.

The mine ventilation system must provide the necessary air quantity and velocity to dilute and disperse the airborne dust generated in the working section. This requires the intake air ventilating working sections to be sufficiently uncontaminated to maintain compliance with applicable dust standards. MSHA recognizes that permitting air from the belt entry to ventilate working sections increases the quantity of air at the working place. The Agency also recognizes that conveyor belt entries represent a constant and potentially significant dust generating source that can contribute to the respirable dust exposure of all miners on the working section. Consistent with the Panel's recommendation, the final rule is necessary to assure that air from the belt entry does not increase miners' exposure to respirable coal mine dust.

Final §§ 75.350(b)(7) and (b)(8), like the proposal, are new provisions. Final § 75.350(b)(7) requires that the air velocity in the belt entry must be at least 100 feet per minute where this air is used to ventilate working sections. It provides that when requested by the mine operator, the district manager may approve lower velocities in the ventilation plan based on specific mine conditions. Final § 75.350(b)(8) requires that the air velocity in the belt entry must not exceed 1,000 feet per minute. It provides that when requested by the mine operator, the district manager may approve higher velocities in the ventilation plan based on specific mine conditions.

These requirements address Panel Recommendation 13. The Panel recommended minimum and maximum air velocities in belt entries for mines using air from belt entries to ventilate working sections. The Panel recommended a minimum velocity of 100 feet per minute, and a maximum of 1,000 feet per minute in the belt entry, but acknowledged that there are situations where these velocities may be difficult to maintain. For this reason, the Panel recommended allowing the district manager to approve exceptions to the minimum and maximum velocities.

The Panel provided three reasons for requiring a minimum velocity of 100 feet per minute: Improve the response time for fire detection; reduce the possibility of methane layering; and mitigate underground fog formation. The Panel recommended limiting the maximum velocity to 1,000 feet per minute to address physical discomfort to workers when air from the belt entry is used to ventilate working sections. Also, according to the Panel, when air from the belt entry is used to ventilate working sections, increased velocity will result in a greater entrainment of dust particles, resulting in a need to limit the velocity.

The Panel noted that it may be difficult to achieve minimum air velocities in locations outby point-feed regulators, and where the air meets a partial obstruction like an airway constriction at an overcast or undercast. MSHA believes that additional areas where minimum air velocities may be hard to achieve include those areas where entry height is exceptionally high.

Consistent with the Panel's recommendation, the final rule provides that the district manager may approve exceptions to the minimum and maximum velocities in the mine ventilation plan based on specific mine conditions. These exceptions can be approved where reductions to sensor spacing or alert and alarm levels are made to assure the fire detection capabilities of the AMS are maintained. In developing their ventilation plans, mine operators should use the criteria in NIOSH research (RI 9380, 1991) to determine appropriate alert and alarm levels.

A commenter supported the proposal but suggested that exceptions to the minimum and maximum velocities be approved at MSHA headquarters. For the reasons outlined above, MSHA believes that the district manager is in the most appropriate position to make a judgment on this issue.

Another commenter objected to any limits on the velocity of air in the belt entry. That commenter stated that velocities greater than 1,000 feet per minute may be necessary in gassy mines. However, the commenter did recognize that the proposal allowed the district manager to approve higher velocities in specific situations.

Consistent with the Panel recommendation, MSHA believes establishing limits on velocity in the final rule, with the district manager being able to approve exceptions to the limits, is justified for mines using air from the belt entry to ventilate working sections.

Final § 75.350(d)(1), like the proposal, revises the existing standard. It requires that the air current that will pass through the point-feed regulator must be monitored for carbon monoxide or smoke at a point within 50 feet upwind of the point-feed regulator. It also requires that a second point must be monitored 1,000 feet upwind of the point-feed regulator, unless the mine operator requests a lesser distance to be approved by the district manager in the mine ventilation plan based on mine-specific conditions.

The final rule addresses Panel Recommendation 16. The Panel recommended that mines using air from the belt entry to ventilate working sections install, where possible, a second carbon monoxide sensor in the primary escapeway 1,000 feet upwind of the sensor required by the existing standard. MSHA believes that this final rule will expedite escape in the case of a fire or other emergency, since a fire in the primary escapeway may be detected before contaminants inundate the alternate escapeway. This early-warning will provide the AMS operator and responsible person with additional time

to assess potential hazards and determine necessary corrective actions.

MSHA is aware that point-feeding air from the primary escapeway to the belt entry designated as the alternate escapeway can present significant problems for miners who must evacuate the mine due to a fire in the primary escapeway. The second sensor would monitor the primary escapeway for fire. Agency experience suggests this is possible in most cases since point-feed regulators are typically near the mouth of development panels or deep into the mains of the mine. However, the final rule allows operators to request that a lesser distance be approved by the district manager in the mine ventilation plan based on mine-specific conditions, for example, near intake shafts where the distance from the point-feed regulator to the bottom of the shaft may be less than 1,000 feet.

A commenter suggested that similar protection should be required for locations where air is introduced from a shaft or slope into the belt air course (injection point). MSHA does not consider these locations to be point-feed regulators. This commenter's suggestion is beyond the scope of the Panel's recommendation and this rulemaking.

Other commenters stated a sensor installed 1,000 feet out by a point-feed regulator did not provide additional protection and was not necessary. In its report, the Panel recommended installation of this sensor to provide earlier warning of a fire in the intake, and to eliminate possible false alarms. MSHA agrees that these sensors can provide early detection of a fire in the intake, and enhance miner safety.

Proposed § 75.350(d)(7) is not included in the final rule. The proposal would have required that where point-feeding air from a primary escapeway to a belt entry designated as an alternate escapeway, point-feed regulators be equipped with a means to remotely close the regulator. It would have also required that the AMS operator, after consultation with the responsible person and section foreman, be capable of performing this function from the designated surface location. The final rule does not include a requirement for providing a means for closing or re-opening the regulator from the designated surface location.

The proposed rule addressed Panel Recommendation 16. The Panel recommended that, when carbon monoxide sensors detect alert or alarm levels of carbon monoxide and the mine has designated the belt entry as the alternate escapeway, the AMS operator should have the ability and authority to remotely close or open the point-feed regulator after consulting with the responsible person designated by the mine operator to take charge during mine emergencies.

Several commenters indicated that closure of a point-feed regulator would be a major ventilation change. The commenters noted that the change can reduce the intake air quantity on a working section and create hazardous conditions. These commenters were opposed to requiring a means to remotely close or re-open point-feed regulators due to the possibility of inadvertent closure, which could create explosive atmospheres in working places. A commenter stated that these types of air changes should be performed only by trained mine rescue personnel with MSHA approval, and only after the mine was evacuated.

MSHA agrees that closure of a regulator can reduce the intake air quantity on a working section, and may cause sudden and rapid increases in methane concentrations on the working sections. Closing regulators without properly notifying sections may lead to an ignition in the face area, fires and explosions.

After a review of the comments, the Agency has determined, based on its experience with making ventilation changes during emergencies that the existing requirement that point-feed regulators be provided with a means to close the regulator from the intake and belt air courses within the mine is the most appropriate method for making this ventilation change during a mine emergency. This allows an on-site evaluation of the circumstances surrounding the emergency, and prevents an inadvertent or unauthorized closure from the surface.

Section 75.351(b)—Designated Surface Location and AMS Operator

Final § 75.351(b)(2), like the proposal, revises the existing standard. It requires that the AMS operator must have as a primary duty the responsibility to monitor the malfunction, alert and alarm signals of the AMS, and to notify appropriate personnel of these signals. In response to comments and to clarify the Agency's intent, the final rule is changed from the proposal to include a requirement that, in the event of an emergency, the sole responsibility of the AMS operator shall be to respond to the emergency.

The final rule addresses Panel Recommendation 12. The Panel indicated that the highest priority of the AMS operator should be monitoring and responding to system signals. Under the final rule, the AMS operator is not prohibited from performing additional duties as long as the alert, alarm and malfunction signals can be seen or heard, and a timely response can be initiated. The final rule will assure that the AMS operator's other duties do not adversely affect the primary responsibility of responding to AMS signals.

Commenters supported this provision, but were concerned that AMS operators may have other duties not directly related to safety and health. These commenters also stated that AMS operators should not have other responsibilities during an emergency.

In response to these comments, the final rule adds a requirement clarifying that, in the event of an emergency, the sole responsibility of the AMS operator shall be to respond to the emergency. This will assure that an AMS operator is performing those duties essential to the safety and health of miners during an emergency.

Section 75.351(e)—Location of Sensors—Belt Air Course

Final § 75.351(e)(1), like the proposal, revises and renumbers existing § 75.351(e). Under final § 75.351(e)(1), the term ''approved'' has been added to clarify that all sensors used for fire detection must be approved under existing § 75.1103–2. In addition, the term ''smoke sensors'' has been deleted. The requirements for smoke sensors are addressed in final § 75.351(e)(2).

Final §§ 75.351(e)(1)(i) and (ii), like the proposal, renumber existing §§ 75.351(e)(1) and (2). Final § 75.351(e)(ii) makes nonsubstantive changes for clarity and ease of reading. No other changes have been made to these provisions.

Final § 75.351(e)(1)(iii), like the proposal, renumbers and revises existing § 75.351(e)(3). It requires approved sensors at intervals not to exceed 1,000-feet along each belt entry; however, in areas along each belt entry where air velocities are between 50 and 100 feet per minute, spacing of sensors must not exceed 500 feet. It also retains the existing requirement that in areas along each belt entry where air velocities are less than 50 feet per minute, the sensor spacing must not exceed 350 feet.

The requirement for a minimum velocity in the belt entry is based on the time it would take for carbon monoxide or smoke to travel from a fire to the sensors. When the air velocity is reduced, the time required to carry carbon monoxide gas or smoke to a sensor is increased. Therefore, the distance between sensors needs to be reduced to maintain the same level of early-warning fire detection.

The 500-foot spacing interval for velocities between 50 and 100 fpm, like the proposal, is a new requirement. MSHA calculated the spacing requirement, which provides a 10-minute maximum travel time for gases between sensors. The 500-foot spacing requirement with a velocity between 50 and 100 fpm is equivalent to the 1,000-foot sensor spacing with 100 fpm air velocity. The time for carbon monoxide gas or smoke to travel from a fire to a downwind sensor is no greater than 10 minutes.

A commenter supported the provision, but stated that the effectiveness of the reduced sensor spacing should be demonstrated in the mine. The Agency has extensive experience and data on the air flow characteristics in belt conveyor entries, including tracer gas tests and ventilation surveys. That experience and data show that reduced sensor spacing requirements are effective for detecting carbon monoxide produced by a fire. MSHA believes further testing at each mine site is not necessary.

Final § 75.351(e)(1)(iv), like the proposal, renumbers and revises existing § 75.351(e)(4). It requires approved sensors not to be more than 100 feet downwind of each belt drive unit, each tailpiece transfer point, and each belt take-up. In addition, if the belt drive, tailpiece, and/or take-up for a single transfer point are installed together in the same air course, and the distance between the units is less than 100 feet, they may be monitored with one sensor downwind of the last component. Also, if the distance between the units exceeds 100 feet, additional sensors are required downwind of each belt drive unit, each tailpiece transfer point, and each belt take-up.

A commenter supported the proposal, and added that the sensors should also be visually examined during the preshift examination. Existing standards require these sensors to be visually examined at least once each shift because they are installed to comply with § 75.350(b). The examination can be made during either the preshift or on-shift examination.

Another commenter suggested the provision should apply only to mines using air from the belt entry to ventilate the working section. While the final rule applies only to mines using air from the belt entry, the same requirement is included in final § 75.1103–4(a)(1)(i) and applies to all mines using belt haulage. Belt drives, tail pieces, transfer points and take-up units are potential fire sources. The additional sensors will assure earlier detection of a fire.

Final § 75.351(e)(1)(v), like the proposal, renumbers existing § 75.351(e)(5). No other changes have been made.

Final § 75.351(e)(2), like the proposal, is a new provision. It requires smoke sensors to be installed to monitor the belt entry under final § 75.350(b). The final rule addresses Panel Recommendation 9 that MSHA require the use of smoke sensors in addition to carbon monoxide sensors in mines using air from a belt entry to ventilate working sections at three specific locations.

When smoke sensors become available, mine operators must comply with the requirements for installing both smoke and carbon monoxide sensors in those mines that use air from the belt entry to ventilate the working section.

Final § 75.351(e)(2)(i), like the proposal, requires a smoke sensor to be installed at or near the working section belt tailpiece in the air stream ventilating the belt entry. In addition, in longwall mining systems, the sensor must be located upwind in the belt entry at a distance no greater than 150 feet from the mixing point where intake air is mixed with the belt air at or near the tailpiece.

A smoke sensor at or near the section tailpiece will warn miners of smoke prior to it contaminating the working section. This allows more time for miners to evacuate the section with less exposure to potentially toxic fumes.

Final § 75.351(e)(2)(ii), like the proposal, requires a smoke sensor to be installed not more than 100 feet downwind of each belt drive unit, each tailpiece, transfer point, and each belt take-up. In addition, if the belt drive, tailpiece, and take-up for a single transfer point are installed together in the same air course, and the distance between the units is less than 100 feet, they may be monitored with one sensor located downwind of the last component. Also, if the distance between the units exceeds 100 feet, additional sensors are required downwind of each belt drive unit, each tailpiece, transfer point, and each belt take-up. These components are potential fire sources. The additional sensors will assure earlier detection of a fire.

Based upon the Panel's report and Agency experience and data, MSHA believes that smoke sensors provide additional protection at the belt drive, which can be a major source of frictional heating from belt slippage. This can often produce significant smoke with little carbon monoxide, and can result in a belt fire.

Final § 75.351(e)(2)(iii), like the proposal, requires smoke sensors to be installed at intervals not to exceed 3,000 feet along each belt entry. The Agency is not requiring a smoke sensor to be installed near the midpoint of the belt line as recommended by the Panel. The midpoint of the belt line will change as the section advances or retreats, which would require splicing of the data line when relocating the smoke sensor. The frequent splicing of the data lines could allow moisture and dust to enter the line and may result in communication failures. Miners have indicated that frequent splicing of the cable containing the AMS data line can adversely affect the reliability of a system.

MSHA believes the requirement for smoke sensors along the belt entry is responsive to the Panel's goal for more effective and reliable early detection of conveyor belt fires. The final rule would avoid problems associated with frequent relocation of the smoke sensor. The 3,000-foot spacing requirement provides longer belts to be monitored at additional locations.

Final § 75.351(e)(2)(iv), like the proposal, provides that the smoke sensor requirements of this final rule are effective one year after the Secretary has determined that a smoke sensor is available to reliably detect fire in underground coal mines. This final rule is consistent with the Panel's suggested delayed effective date for the smoke sensor requirement, to permit in-mine evaluation of the sensors. The Panel noted reliability and maintenance issues with the use of smoke sensors in underground coal mines, especially along conveyor belt entries.

NIOSH is currently testing smoke sensors used in other harsh industrial environments for their potential use in underground mines. NIOSH is evaluating these sensors to assess reliability and service life.

To allow for further in-mine evaluation and approval of smoke sensors, the Secretary's determination will be made after a nationally recognized testing laboratory formally lists a smoke sensor specifically tested for use in underground coal mines. In making the determination regarding the availability of smoke sensors, the Secretary will also consider whether additional rulemaking is appropriate. MSHA will notify mine operators of the availability of smoke sensors by publishing a notice in the **Federal Register**.

The final rule is based on the Secretary's authority under existing § 75.1103–2 to approve nationally recognized testing laboratories. The Secretary has approved two such laboratories for listing or approving components of automatic fire sensors.

They are Underwriters Laboratories (UL) and Factory Mutual (FM). These laboratories establish standards for manufacturers of components of automatic fire sensors used in underground coal mines.

MSHA has recommended a change to a commercial standard for smoke detectors to be applied to address sensor reliability in underground coal mines. In December 2002, the Agency asked UL to add a category for smoke sensors for underground coal mines to their commercial performance standard for smoke sensors (UL268). In MSHA's request to UL, the Agency asked that the performance standard for smoke sensors include tests for sensitivity to smoldering and flaming coal. UL has formed a new working group, which includes an MSHA representative, to study false alarms caused by coal mine dust and other airborne particulates.

MSHA's Program Policy Manual (Manual) provides additional guidance on the requirements of § 75.1103–2. The Manual states that fire sensors used in belt entries must be listed or approved by UL or FM. New or unique devices to be used as fire sensors that are not yet listed by UL or FM and which may meet the requirements of these standards can be submitted to MSHA's Office of Technical Support for a determination of whether they are acceptable to use.

Once a laboratory has formally listed a smoke sensor for use in underground coal mines, the Secretary will evaluate the sensor to determine if it will reliably detect a fire in the underground environment. MSHA believes that, once the smoke sensors for underground coal mines are available, one year will allow mine operators using air from the belt entry to ventilate working sections sufficient time to purchase and install the sensors. The Agency intends to keep the mining community informed of ongoing activities with respect to the development of smoke sensors for underground coal mines.

Some commenters supported the proposal, but stated that smoke sensors are currently available. They added that upon approval, installation should be immediate and not be delayed by allowing one year for compliance. Other commenters stated that smoke detectors should not be required until they are reliable and commercially available.

NIOSH has not found smoke sensors to be reliable for fire detection in the mine environment. Research continues to identify technology that can be adapted to the mine environment, and MSHA intends to require smoke sensors when available. The Agency believes that one year is an appropriate time period for manufacturers to produce the sensors, and for mine operators to purchase and install them.

A commenter supported the locations of smoke sensors but wanted sensors to be placed at intervals not to exceed 1,500 feet and to have smoke sensors placed at every transfer point along each belt line. Consistent with the Panel recommendation, the Agency believes a 3,000-foot interval achieves the objective for placing a sensor near the midpoint of each belt flight. MSHA recognizes that once a smoke sensor has been approved for use in underground coal mines, adjustments to spacing requirements may be necessary based on in-mine testing.

Section 75.351(q)—Training

Final § 75.351(q)(1), like the proposal, revises existing § 75.351(q). It requires that all AMS operators must be trained annually in the proper operation of the AMS. It requires that training include the following subjects under final paragraphs (q)(1)(i) through (vii): Familiarity with underground mining systems; basic AMS requirements; the mine emergency evacuation and firefighting program of instruction; the mine ventilation system including planned air directions; appropriate responses to alert, alarm and malfunction signals; use of mine communication systems including emergency notification procedures; and AMS recordkeeping requirements.

The final rule is consistent with Panel Recommendation 12 which specifies the content of required annual training for AMS operators.

Under the final rule, training should address the specific conditions and practices at the mine where the AMS operator is employed. Based on Agency experience, MSHA believes an understanding of these subjects is essential to properly perform the duties of an AMS operator.

A commenter supported the specified content of the proposed training but stated that the training under the proposal should not be part of the annual Part 48 training. This commenter also stated that AMS operators should receive training on system maintenance and calibration in order to better judge when the system may need maintenance.

The training required in the final rule is separate from annual refresher training in Part 48. AMS operators will receive training on those aspects of maintenance and calibration that are directly related to alert, alarm, and malfunction signals.

Final § 75.351(q)(2), like the proposal, is new and requires that, at least once every six months, all AMS operators must travel to all working sections. The Panel stated that some AMS operators do not travel underground, and recommended that they be required to spend at least a day underground on a semi-annual basis.

Several commenters objected to the proposal, stating that some AMS operators are disabled and may not be able to travel underground safely. In support of their objection, they stated that some of these AMS operators are miners with substantial underground experience and, under the proposal, would be precluded from operating the AMS. Another commenter stated that accommodations can be made for disabled AMS operators to travel underground.

Other commenters supported the proposal because they recognize the value of the AMS operator being familiar with underground workings. In their view, this familiarity gives AMS operators a greater sense of what needs to be done during an emergency. These commenters also stated that a greater frequency than every six months may be needed.

Consistent with the Panel recommendation, MSHA believes it is important for AMS operators to travel underground to retain familiarity with underground mining systems including haulage, ventilation, communication, and escapeways. MSHA appreciates commenters' concerns for disabled miners, but the Agency believes that accommodations can be made to allow disabled AMS operators to meet this requirement. MSHA also believes that the six-month frequency recommended by the Panel is appropriate to provide AMS operators with current information on the underground operation.

Final § 75.351(q)(3) is changed from the proposal to be consistent with the existing requirement to keep training records for one year. It requires a record of the content training, the person conducting the training, and the date the training was conducted to be maintained at the mine for at least one year by the mine operator. The final rule allows MSHA to verify the training in the previous year has been conducted.

Several commenters objected to the proposed requirement to maintain the training records for two years, stating that it was inconsistent with other existing record retention requirements. One commenter supported the proposal. For consistency, the final rule includes a one year record retention period.

Section 75.352—Actions in Response to AMS Malfunction, Alert, or Alarm Signals

Final § 75.352(f), like the proposal, makes a conforming reference and organizational changes to the existing standard. It deletes the term ''50-foot per minute'' and replaces the reference to § 75.351(e)(3) with § 75.350(b)(7).

Final § 75.352(g), like the proposal, is new. It requires that the AMS automatically provide both a visual and audible signal in the belt entry at the point-feed regulator location, at affected sections, and at the designated surface location when carbon monoxide concentrations reach (1) the alert level at both point-feed intake monitoring sensors, or (2) the alarm level at either point-feed intake monitoring sensor.

The final rule addresses Panel Recommendation 16 that when both of the sensors installed in the primary escapeway monitoring the point feed reach the carbon monoxide alert level, or if one sensor reaches the alarm level, a warning signal be given at the regulator location. The Panel's recommendation addresses point-feed regulators where air is introduced to a belt entry and used to ventilate the working section. The Panel specifically limited this recommendation to point-feed regulators feeding the belt entries designated as alternate escapeways.

The final rule provides that visual and audible signals be automatically activated at all three locations when concentrations of carbon monoxide at both of the sensors in the intake escapeway reach the alert level or when one sensor reaches the alarm level.

The signal at the regulator would provide notice to miners nearby that a fire may have occurred in the primary escapeway. This information will assist miners in evacuating the mine.

The Panel did not specify in which escapeway the signal is to be located. The final rule specifies that the signal be located in the belt entry (alternate escapeway). Since the purpose of the signal is to warn of a potential fire in the primary escapeway, MSHA believes that it is more appropriate to locate the signal on the belt side of the regulator.

A commenter stated that since the signal is in an area that is normally unmanned, it would not be useful. That commenter further stated that if a signal is required, it should only alarm when the point feed regulator has been closed, and the signal should only be required if the belt entry is designated as the alternate escapeway.

Consistent with the Panel recommendation, the signal is required only where the belt entry is designated as the alternate escapeway. This would include any entries designated as the escapeway common with the belt. This signal must be given when sensors monitoring the primary escapeway indicate a potential fire. The signal, which is in addition to the signals provided to affected sections, will provide miners in the area with early notification that there is a potential fire in the primary intake, and that the alternate escapeway could become contaminated. The signal would allow those miners to take early and appropriate action.

Section 75.371—Mine Ventilation Plan; Contents

Final § 75.371(jj), like the proposal, revises the existing standard. It requires that the mine ventilation plan contain the locations and approved velocities at those locations where air velocities in the belt entry are above or below the limits set forth in final § 75.350(a)(2) or final §§ 75.350(b)(7) and 75.350(b)(8).

The final rule addresses Panel Recommendation 13 regarding the approval of air velocities in the belt entry. Although the Panel recommended minimum and maximum velocities in the belt entry, they recognized that in certain areas of underground coal mines it may be difficult to achieve these velocities. The Panel specifically noted that this may occur in the outby air split near a point-feed regulator, or where the air meets a partial obstruction like an airway constriction at an overcast or undercast. Where the recommended velocities cannot be achieved, the Panel recommended that the district manager may approve exceptions in the mine ventilation plan, dependent upon specific mine conditions.

MSHA believes that requiring approval in the mine ventilation plan will allow the district manager to fully evaluate the conditions in the mine including all aspects of the mine ventilation system. In making a determination on whether to approve requested velocities, the district manager would evaluate the need for increasing fire detection sensitivity by adjusting alert and alarm levels for high velocities or reducing sensor spacing for low velocities.

Final § 75.371(mm), like the proposal, revises the existing standard. It requires that the mine ventilation plan contain the location of any diesel-discriminating sensor, and additional carbon monoxide or smoke sensors installed in the belt air course.

The final rule addresses Recommendation 10 that MSHA perform regular, periodic reviews of the AMS records at mines using air from a belt entry to ventilate working sections to evaluate the number of occurrences of false alarms due to diesel exhaust. In those instances where such false alarms are excessive, the Panel recommended MSHA should require the use of diesel-discriminating sensors.

Based on Agency experience and data, diesel exhaust contains carbon monoxide, and can activate alerts and alarms. Under these circumstances, these signals may not be the result of a fire, but the result of diesel equipment operating in the area. An excessive number of these alert and alarm signals can cause miners to become complacent and routinely ignore them as false alarms. The benefit of diesel-discriminating sensors is that the frequency of signals caused by diesel engines is reduced.

The final rule provides that the district manager may require the use of diesel-discriminating sensors in the approved mine ventilation plan. It requires that the operator include in the ventilation plan the locations of any diesel-discriminating sensors. The district manager decision to require the use of these sensors will be based on mine conditions where diesel-powered equipment is used and excessive alert and alarm signals are caused by diesel exhaust. Since the final rule is applicable to all mines using belt haulage, the reference to existing § 75.351(e)(5), that relates to mines using air from the belt entry to ventilate the working section, is deleted.

MSHA conducts periodic reviews of AMS records during regular inspections of the mine. MSHA re-emphasized procedures for inspecting an AMS in a recently revised Agency handbook, which specifically provides inspectors with guidance on evaluating the frequency of diesel-related alert and alarm signals (Carbon Monoxide and Atmospheric Monitoring Systems Inspection Procedures MSHA Handbook PH–08–V–2, February, 2008).

Final § 75.371(nn), like the proposal, revises the existing standard. It requires that the mine ventilation plan contain the length of the time delay or any other method used to reduce the number of non-fire related alert and alarm signals from carbon monoxide sensors.

This final rule addresses Panel Recommendation 8 on discontinuing the use of point-type heat sensors, and replacing them with carbon monoxide sensors for early fire detection in all mines using belt haulage. Existing § 75.351(m) requires that the use and length of any time delays be approved by the district manager in the mine ventilation plan for mines using air from the belt entry to ventilate the working

section. Time delays may also be necessary in some mines that do not use air from the belt entry to ventilate working sections to aid in the reduction of false alarms. Like the proposal, final § 75.1103–4 requires the use of carbon monoxide sensors. Therefore, time delays for these mines must also be approved in the mine ventilation plan. Accordingly, the final rule deletes the reference to existing § 75.351(m) because this final rule applies to all mines using belt haulage.

Proposed § 75.371(yy) would have required that the mine ventilation plan contain the locations where airlock doors are installed between air courses. Several commenters suggested that including the locations in the ventilation plan is unnecessary since those locations are already required on the mine ventilation map. Commenters also stated that no approval to install an airlock should be required in the ventilation plan. MSHA concurs that the mine ventilation map is the appropriate place to identify airlock locations. Therefore, proposed § 75.371(yy) is not included in the final rule.

Proposed § 75.371(zz) is renumbered to § 75.371(yy). It requires that the mine ventilation plan contain the locations where the pressure differential cannot be maintained from the primary escapeway to the belt entry.

The final rule addresses Panel Recommendation 14 that primary escapeways be ventilated with intake air preferably, and to the extent possible, the primary escapeway should have a higher pressure than the belt entry. The final rule allows the district manager to evaluate specific mine conditions and require additional actions or precautions to be taken to protect the integrity of the primary escapeway, as appropriate.

A commenter suggested that requiring approval in the ventilation plan of locations where pressure differentials cannot be maintained would require frequent and unnecessary changes. MSHA believes these areas must be identified in the plan to allow an evaluation of the methods used to limit air leakage into the primary escapeway. The Agency expects that in areas where the pressure differentials cannot be maintained from the primary escapeway to the belt, mine operators will provide additional protection to maintain the integrity of the primary escapeway. These protections would include enhanced stopping construction and design, or changes to the ventilation system.

Sections 75.380—Escapeways; Bituminous and Lignite Mines, and 75.381—Escapeways; Anthracite Mines

Final §§ 75.380(d)(7)(v) and 75.381(c)(5)(v), like the proposal, revise the existing standards. They require that each lifeline be equipped with one directional indicator cone securely attached to the lifeline, signifying the route of escape, placed at intervals not exceeding 100 feet. In addition, cones must be installed so that the tapered section points inby. The final rule adds the phrase ''securely attached to the lifeline'' to clarify the Agency's intent under the proposal.

Final §§ 75.380(d)(7)(vi) and 75.381(c)(5)(vi), are renumbered and changed from proposed §§ 75.380(d)(7)(vii) and 75.381(c)(5)(vii). They require each lifeline to be equipped with one sphere (such as a tennis ball) securely attached to the lifeline at each intersection where personnel doors are installed in adjacent crosscuts.

Final §§ 75.380(d)(7)(vii) and 75.381(c)(5)(vii), are new. The final rule responds to comments by simplifying the proposal. The final rule requires that each lifeline be equipped with two securely attached cones, installed in succession with the tapered section pointing inby, to signify an attached branch line is immediately ahead.

Final §§ 75.380(d)(7)(vii)(A) and 75.381(c)(5)(vii)(A) are renumbered and changed from proposed §§ 75.380(d)(7)(vi) and 75.381(c)(5)(vi). They require a branch line leading from the lifeline to an SCSR cache to be marked with four cones with the base sections in contact to form two diamond shapes. The cones must be placed within reach of the lifeline.

Final §§ 75.380(d)(7)(vii)(B) and 75.381(c)(5)(vii)(B) are renumbered and changed from proposed §§ 75.380(d)(7)(ix) and 75.381(c)(5)(ix). They require a branch line leading from the lifeline to a refuge alternative to be marked with a rigid spiraled coil at least eight inches in length. The spiraled coil must be placed within reach of the lifeline.

Proposed §§ 75.380(d)(7)(viii) and 75.381(c)(5)(viii), which required each lifeline be marked to provide tactile feedback distinguishable from other markings to indicate the location of physical impediments in the escapeways, are not included in the final rule.

The final rules address Panel Recommendation 15. The Panel made recommendations on tactile signals attached to lifelines and signal standardization.

Several commenters supported the proposed standardization of tactile signals, but believed the proposed rule created a system of cones that was too complicated. These commenters wanted a simpler system that would be easier to remember during a mine emergency. Several of these commenters also stressed the need for adequate training for miners.

Another commenter believed standardization was not necessary, and that mines should be permitted to continue to use signals they have developed, which have been used for an extended period of time. This commenter believed changing the tactile signals may create confusion. This commenter also stated the proposal would require replacing miles of lifeline in their mine and retraining hundreds of miners for little benefit.

During the rulemaking process and at the beginning of each public hearing, the Agency specifically solicited comments on alternate tactile signal markings. The Agency received no specific comments suggesting alternatives to its proposal.

In response to comments, the final rule requires a simpler system of tactile signals. The Agency continues to believe that a standardized system will reduce the possibility of confusion in an emergency, and will provide an additional safety benefit to miners who transfer to different mines, because they would not have to become familiar with new signal systems.

The final rule requires only three signals to be attached to the lifeline. These are for direction of travel, location of personnel doors, and to alert miners that a branch line is ahead that would lead to either an SCSR storage cache or a refuge alternative. Additional signals are required on the branch lines to identify whether it leads to an SCSR storage cache or a refuge alternative. Illustration 1 shows how these signals should be installed.

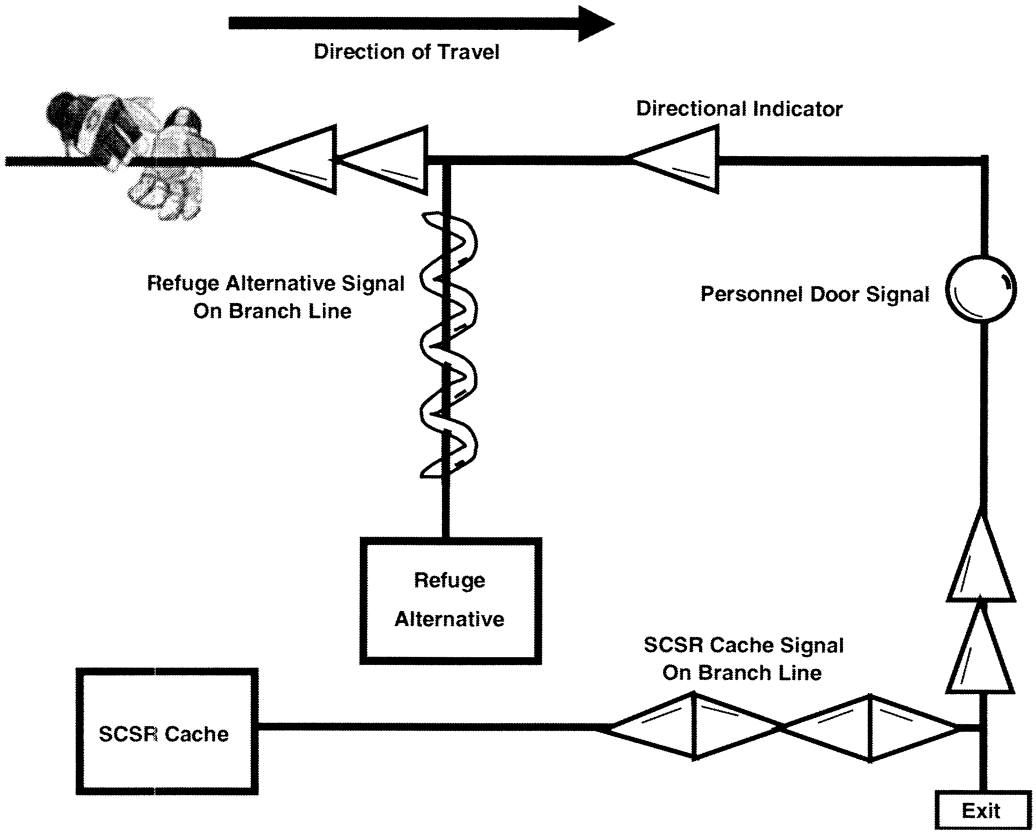

Illustration 1

The final rule does not include a tactile signal to indicate the location of physical impediments in the escapeway. By not including this signal, the Agency has simplified the signals on the lifeline. The Agency believes that the locations of physical impediments can be addressed during evacuation training.

In another rulemaking, MSHA is establishing new requirements for refuge alternatives in underground coal mines. Because tactile signals on lifelines are addressed in this final rule, to provide a comprehensive and integrated approach for these requirements, the Agency is including the requirement for tactile signals leading to refuge alternatives in this rulemaking. In the proposal, the Agency would have required a two-foot rigid coil as a tactile signal for refuge alternatives. The proposed requirement has been changed to a rigid spiraled coil at least eight inches in length.

These signals, when integrated with the comprehensive escape and evacuation plan, including escapeway drills and expectation training, will help miners understand the differences in, and significance of, tactile signals and aid in evacuating the mine.

Existing §§ 75.380(d)(7) and 75.381(c)(5) require escapeways to be provided with lifelines or an equivalent device. The new requirements for tactile signals are applicable to any device used to comply with these sections.

Final §§ 75.380(f) and 75.381(e), like the proposal, revise the existing standards on the primary escapeway. They provide that one escapeway, ventilated with intake air, shall be designated as the primary escapeway. The final rules require that the primary escapeway shall have a higher ventilation pressure than the belt entry unless the mine operator submits an alternative in the mine ventilation plan to protect the integrity of the primary escapeway, based on mine specific conditions, which must be approved by the district manager.

The final rules address Panel Recommendation 14. The Panel recommended that primary escapeways should be designed, constructed, and maintained in accordance with the provisions of existing §§ 75.333(b) through (d) to minimize the air leakage. The Panel also recommended that primary escapeways be ventilated with intake air and, to the extent possible, the primary escapeway should have a higher pressure than the belt entry. Based on Agency experience, MSHA recognizes the need to maintain the pressure differential from the primary escapeway to the belt air course. A higher pressure in the primary escapeway would assure that air leakage would move from the escapeway to the belt entry. In case of a fire in the belt entry, the primary escapeway would not become contaminated. Under the final rule, an operator may submit an alternative in the mine ventilation plan, based on mine specific conditions, to protect the integrity of the primary escapeway. The alternative must be approved by the district manager.

There are two components to air leakage. First, the flow from one entry to the other is caused by the pressure differential. Air will tend to flow from high to low pressure. The other component is the resistance to flow. A high resistance will not allow high air flow rates even when the pressure differentials are considerable. A key to limiting air leakage through a ventilation control is to increase the resistance by sealing the control and its perimeter. Historically, MSHA has identified damaged and improperly installed doors as sources of high air leakage. Openings in stoppings to provide routing of air and water lines, electrical conductors and other conduits must also be sealed to minimize air leakage. When these conduits are

removed, ventilation controls must be properly repaired.

The Agency does not support the use of check curtains or other temporary ventilation controls such as parachute stoppings to increase the resistance in the primary escapeway in order to pressurize the air course during normal mining. The use of such controls on a regular basis diminishes the efficiency of the ventilation system.

Commenters stated that mine operators should be required to maintain the pressure differential from the primary escapeway to the belt entry at all times, and that alternatives should not be approved in the mine ventilation plan, but only in petitions for modification. A commenter also stated the pressure in the primary escapeway should at all times be at least 50 percent higher than that in the belt entry.

Other commenters indicated that maintaining the pressure differential as proposed may not be feasible in all areas of the mine.

Consistent with the Panel recommendation, MSHA believes that to the extent possible, the primary escapeway should have a higher pressure than the belt entry. The Agency's action in the final rule reflects the Agency's opinion that it is not possible to maintain the primary escapeway at a pressure 50 percent higher than the belt entry in all areas of the mine, as suggested by commenters. This is especially so on development sections where pressures equalize near the section loading point. Due to unique conditions in mines, the district manager is the appropriate official to make determinations regarding alternatives to maintaining the pressure differential based upon a review of the mine operator's proposed revision to the mine ventilation plan.

Subpart L—Fire Protection

Section 75.1103–4—Automatic Fire Sensor and Warning Device Systems; Installation; Minimum Requirements

Final § 75.1103–4, like the proposal, requires the use of carbon monoxide sensors for fire detection along belt conveyors in all underground coal mines. In addition, the final rule includes installation, maintenance, operating and training requirements related to the use of carbon monoxide sensors.

Final § 75.1103–4(a), like the proposal, requires that on December 31, 2009 automatic fire sensor and warning device systems that use carbon monoxide sensors shall provide identification of fire along all belt conveyors.

The final rule eliminates the existing requirement to identify the belt flight on which the system detects fire. When point-type heat sensors are used for fire detection, they are designed to identify the belt flight on which the fire occurs. Carbon monoxide sensors provide a more precise identification of the location, to within 1,000 feet.

The final rule supersedes granted petitions for modification that allowed mine operators to use carbon monoxide sensors equivalent to point-type heat sensors. Mines operating under these petitions must comply with the requirements in the final rule. Mines that have installed carbon monoxide sensors in lieu of point-type heat sensors must comply with the final rule.

Commenters supported the proposal. A commenter stated that carbon monoxide sensors provide for a safer method of detecting fires than point-type heat sensors.

Final § 75.1103–4(a)(1), like the proposal, requires carbon monoxide sensors to be installed at specific locations along belt conveyors. These locations maximize the potential of early warning of a fire in the belt entry, and are based on Agency experience with the use of carbon monoxide sensors in underground coal mines.

Final § 75.1103–4(a)(1)(i), like the proposal, requires a sensor to be placed not more than 100 feet downwind of each belt drive unit, each tailpiece transfer point, and each belt take-up. If the belt drive, tailpiece, and/or take-up are installed together in the same air course, they may be monitored with one sensor located not more than 100 feet downwind of the last component. However, if the distance between the belt drive unit, tailpiece transfer point, and belt take-up units exceeds 100 feet, additional sensors are required to monitor each of these belt conveyor components.

A commenter supported the proposal. Other commenters objected to the proposal, stating that additional sensors would be unnecessary, require additional maintenance, and could be the source of false alarms. Another commenter stated that one sensor should be allowed to monitor a belt transfer consisting of a drive, take-up, and a tailpiece if all are in the same ventilation stream.

A commenter was concerned that installation of the sensor at an existing belt drive could expose miners to risks when working at heights. To avoid these risks, the commenter stated that these sensors should not be installed at existing belt drives but only at belt drives installed in the future.

As stated in the proposal, this requirement is intended to provide early fire detection at the belt drive where there are multiple belt components, which are potential fire sources, and the distance between these components exceeds 100 feet. The final rule allows one sensor to monitor the drive, take-up, and tailpiece if the distance is less than 100 feet. When sensors need to be installed in high places, the mine operator can use mechanisms that allow sensors to be temporarily lowered to a location where they can be safely accessed for maintenance purposes.

Final § 75.1103–4(a)(1)(ii), like the proposal, requires a sensor to be installed in the belt entry not more than 100 feet downwind of each section loading point. This sensor monitors the section loading point, and provides miners on the section with warning of fire in the belt entry. A commenter supported the proposal.

Final § 75.1103–4(a)(1)(iii), like the proposal, requires that sensors be located along the belt entry so that the spacing between sensors does not exceed 1,000 feet. Where air velocities are less than 50 feet per minute, spacing must not exceed 350 feet.

The 350-foot spacing requirement has been shown in NIOSH research to provide effective early warning of a fire in the belt entry when the air velocity is 50 feet per minute or less. The combination of sensor spacing and air velocity is required to assure that carbon monoxide produced by a belt fire is transported to the sensor to provide for an effective warning.

A commenter stated that the spacing requirement should be modified so that sensors are placed every 500 feet to allow the location of a fire to be detected with greater accuracy. Another commenter stated that 2,000 feet spacing of sensors is effective.

Another commenter stated that 500 feet would be more appropriate spacing for carbon monoxide sensors where the velocity along the belt is less than 50 feet per minute.

NIOSH research on sensor spacing has shown that 1,000 feet is the appropriate distance for air velocities of least 50 fpm. Additional NIOSH research has demonstrated that reduced sensor spacing of 350 feet is necessary when air velocities are less than 50 fpm to maintain early fire detection capabilities.

As discussed earlier, MSHA uses representative cross-sectional areas when determining air velocities. MSHA would not use large areas (such as belt channels, boom holes, and fall areas) and restricted areas (such as overcasts) to determine air velocities.

Proposed § 75.1103–4(a)(1)(iv) has not been included in the final rule. It would have required sensors to be located upwind, a distance of no greater than 50 feet from the point where the belt air course is combined with another air course or splits into multiple air courses.

A commenter stated that the sensor required under the proposal is unnecessary because it provides little additional information and should be addressed in the ventilation plan if needed. MSHA concurs that this sensor is not necessary. The Agency expects the location of the sensors required in the final rule will provide precise information on the location of a fire in the belt entry.

Final § 75.1103–4(a)(1)(iv) is new, clarifies MSHA's intent under the proposal, and requires that the location and identification of all carbon monoxide sensors be included on the mine maps required under existing §§ 75.1200 and 75.1505. MSHA has included this clarification in response to a comment that the location of sensors be on a mine map that is available to miners. This is consistent with the existing standard related to identifying the location of stored SCSRs.

Final § 75.1103–4(a)(2), like the proposal, requires that where used, sensors responding to radiation, smoke, gases, or other indications of fire, shall be spaced at regular intervals to provide protection equivalent to carbon monoxide sensors, and installed within the time specified in this final rule.

The final rule removes the reference to point-type heat sensors and replaces it with carbon monoxide sensors. As stated earlier, point-type heat sensors cannot be used for fire detection along belt conveyors.

A commenter supported this proposal and stated that point-type heat sensors should only be used to activate fire suppression systems.

Final § 75.1103–4(a)(3), like the proposal, requires that when the distance from the tailpiece at loading points to the first outby sensor reaches the spacing requirements in § 75.1103–4(a)(1)(iii), an additional sensor shall be installed and put in operation within 24 production shift hours. When sensors of the kind described in paragraph (a)(2) of this section are used, they shall be installed and put in operation within 24 production shift hours after the equivalent distance that has been established for the sensor from the tailpiece at loading points to the first outby sensor is first reached.

The final rule removes the 125-foot spacing requirement for point-type heat sensors and replaces it with conforming requirements for carbon monoxide sensor spacing. Because point-type heat sensors are no longer permitted, spacing for the devices is no longer applicable. Carbon monoxide sensors must be added when the distance from the section loading point to the first outby sensor reaches 1,000 feet when air velocity is at least 50 feet per minute, and 350 feet if the velocity is less than 50 feet per minute. A commenter supported the proposal.

Final § 75.1103–4(b), like the proposal, requires that sensors be installed to minimize the possibility of damage from roof falls and the moving belt and its load. The sensors must be installed near the center in the upper third of the entry, in a manner that does not expose personnel working on the fire detection system to unsafe conditions. The final rule requires that sensors not be located in abnormally high areas or in other locations where air flow patterns do not permit products of combustion to be carried to the sensors.

MSHA based this requirement on the results of NIOSH research and Agency experience with carbon monoxide sensors. Data has shown that during both smoldering and open combustion fires, the products of combustion stratify, leaving higher concentrations of smoke and carbon monoxide near the mine roof. Based on this, NIOSH recommended installing sensors near the roof of the entry to take advantage of stratification. MSHA's experience is that when operators do not properly install sensors, fire detection can be hindered or delayed. For example, sensors that are installed behind equipment or other obstructions may not be exposed to the products of combustion contained in the air stream, thereby impairing their ability to provide for effective fire detection.

The final rule requires sensors to be installed near the center, and in the upper third, of the belt entry. In most cases, the safest location for installing a sensor is from a roof bolt plate or belt hanger located beside the belt along the walkway. This prevents miners from being exposed to hazards such as a moving belt when calibrating or examining sensors. A commenter supported the proposal.

The final rules, and those in §§ 75.1103–5, 75.1103–6, and 75.1103–8 discussed below, address Panel Recommendation 8. The Panel recommended that MSHA initiate rulemaking to discontinue the use of point-type heat sensors for early-warning and detection of conveyor belt fires in all underground coal mines.

In making its recommendation, the Panel examined research comparing the fire detection capabilities of carbon monoxide sensors and point-type heat sensors. The Panel concluded that there are inherent inadequacies with point-type heat sensors for reliable early-warning belt fire detection. According to the Panel's report, carbon monoxide sensors can detect fires at an earlier stage of fire development than point-type heat sensors. The Panel found the time it took for point-type heat sensors to alarm during a fire was much longer than the time it took carbon monoxide sensors to alarm. The Panel also found that the location and spacing of point-type heat sensors relative to fire location could result in fires not being detected in a timely manner.

Research and accident investigation reports on fires have consistently shown that carbon monoxide sensors are superior to point-type heat sensors. MSHA's accident investigation report of the Dilworth mine fire (MSHA, 1992 Greene County, PA), revealed that carbon monoxide sensors were superior to point-type heat sensors, where both sensors were installed in the same belt entry. The ignition source of the fire was located nearly midway between two heat sensors spaced at 50 feet. The fire was detected by the carbon monoxide sensor located 1,400 feet downwind of the fire. The fire was extinguished by miners without injury and with only little damage in the belt entry. The heat sensors installed along the belt did not detect the fire.

Section 75.1103–5—Automatic Fire Warning Devices; Actions and Response.

Final § 75.1103–5, like the proposal, has been retitled. It adds requirements for initiating warning signals and responses for automating fire warning devices.

Final § 75.1103–5(a), like the proposal, requires that when the carbon monoxide level reaches 10 parts per million (ppm) above the established ambient level at any sensor location, an effective warning signal must be provided at specific locations.

Consistent with MSHA's existing standards for a warning signal to be effective, they must be located where they can be seen or heard. MSHA experience also shows that an action level at 10 parts per million above the ambient level provides an effective warning of a fire and allows miners the opportunity to safely evacuate the affected area.

The Agency solicited comments on the proposal. A commenter supported it. Another commenter stated that at mines

not using air from the belt entry to ventilate working sections, a warning level should be given at 10 ppm and an alarm at 15 ppm. The final rule is based on a NIOSH research recommendation that a carbon monoxide fire warning and withdrawal of miners be initiated at 10 ppm above the ambient level.

Final § 75.1103–5(a)(1), like the proposal, requires effective warning signals to be provided to working sections and other work locations where miners may be endangered from a fire in the belt entry.

Locations where miners may be endangered would include working sections, areas where mechanized mining equipment is being installed or removed, permanent work locations, and other locations specified in the Mine Emergency Evacuation and Firefighting Program of Instruction required under existing § 75.1502. A commenter supported the proposal.

Final § 75.1103–5(a)(2), like the proposal, requires that the warning signal be provided at a manned surface location where personnel have an assigned post of duty.

MSHA believes that providing the warning at a manned surface location will facilitate timely and effective evacuation of miners and improve communication with mine management. This will also facilitate more effective decision-making in a mine emergency and allow for required communication with local emergency response personnel, appropriate state agencies, and MSHA. This is consistent with the Emergency Response Plan requirement in Section 2 of the MINER Act for local communication.

Commenters requested clarification on the term ''assigned post of duty''. Another commenter supported the proposal. The term ''assigned post of duty'' is not new and was in a requirement for mines using point-type heat sensors. It refers to the location where miners are regularly assigned to work and are able to see or hear the warning signal.

Final § 75.1103–5(a)(2)(i), like the proposal, retains the existing requirement for having a telephone or equivalent communication with all miners who may be endangered.

A commenter stated that the final rule should also recognize a PED (personal emergency device) as an equivalent communication. A PED is not equivalent to a telephone because it does not provide two way communications, which is essential during a mine emergency.

Final § 75.1103–5(a)(2)(ii), like the proposal, is new. It requires a mine map or schematic that shows the location of sensors and the intended air flow direction at these locations to be posted at the manned surface location. This map or schematic must be updated within 24 hours of any change in information.

The final rule is necessary to assure that the location of a potential fire can be identified in a timely manner. With the use of carbon monoxide sensors, a fire location is identified by specific sensors. The sensor locations are most easily identifiable by using a map or schematic. The air directions are needed to facilitate fire fighting activities and evacuation in the event of a fire, explosion or other emergency.

A commenter stated that this information should also be on the mine bulletin board so that it is available to miners. The final rule has been changed to specify that the location of all carbon monoxide sensors be included on the mine maps required under §§ 75.1200 and 75.1505. These maps are available to miners.

Final § 75.1103–5(a)(3), like the proposal, is derived from the existing standard, and has not been changed, except for the numbering.

Final §§ 75.1103–5(d) through (h), like the proposal, are new provisions which specify responses required to signals from the automatic fire warning devices. They are consistent with requirements for responses to AMS signals in existing § 75.352 and apply to all mines using belt haulage.

Final §§ 75.1103–5(d), like the proposal, requires that when a malfunction or warning signal is received at the surface location, the sensor must be identified and appropriate personnel be immediately notified. Depending upon the circumstances at the mine, appropriate personnel may include the mine foreman, mine electrician, or other persons responsible for maintaining the sensors.

Final § 75.1103–5(e), like the proposal, requires that upon notification of a malfunction or warning signal, appropriate personnel must immediately initiate an investigation to determine the cause of the malfunction or warning signal and take the required action set forth in § 75.1103–5(f). The final rule requires immediate corrective actions to assure that the appropriate responses are taken in case of an emergency.

Commenters requested clarification on the term immediately as used in the proposal because the responses required may take longer than 15 minutes to accomplish. Another commenter supported the proposal.

The term immediately in the final rule means that the required actions must be promptly initiated after a malfunction or warning signal is received. The amount of time it takes to resolve the issue depends on the occurrence. MSHA does not intend that the use of the term immediate in the final rule be defined by the 15-minute immediate accident notification requirement in existing § 50.10.

Final § 75.1103–5(f), like the proposal, requires specific procedures to be followed if any sensor indicates a warning, unless the mine operator determines that the signal does not present a hazard to miners.

For example, if the operator knows that the warning signal is caused by cutting and welding or calibration of a sensor, actions would not have to be taken. MSHA believes that actions in response to carbon monoxide malfunction or warning signals are needed to assure that the protective early-warning capabilities of the carbon monoxide sensor result in timely action and rapid evacuation in case of emergency.

Final § 75.1103–5(f)(1), like the proposal, requires appropriate personnel to notify miners in affected working sections, in affected areas where mechanized mining equipment is being installed or removed, and at other locations specified in the existing approved mine emergency evacuation and firefighting program of instruction when a warning signal is received.

Commenters questioned the need for appropriate personnel to notify miners in addition to providing the automatic signal. Another commenter supported the proposal.

It is necessary for appropriate personnel to notify miners, in addition to the automatic signal, to assure that miners receive the warning and withdrawal is initiated. Notification under this final standard facilitates two-way communication among those involved and those responsible for addressing the emergency, and thus enhances successful decision-making.

Final § 75.1103–5(f)(2), like the proposal, requires all miners in the affected areas to be immediately withdrawn to a safe location identified in the mine emergency evacuation and firefighting program of instruction upon notification of a warning signal. Under the final rule, miners who are assigned emergency response duties do not have to be withdrawn.

Commenters stated that immediate withdrawal of all miners in affected areas upon notification of a warning signal without investigation would be a problem when there are false alarms.

Another commenter supported the proposal.

Once a warning signal is received, there is a significant likelihood that a fire has occurred and, in the confined area of an underground mine, miners must be immediately withdrawn. Waiting for the results of an investigation could put miners at risk of being trapped by the fire. If false alarms are occurring, the mine operator should take action to reduce those alarms, such as installing diesel-discriminating or hydrogen-insensitive sensors, or programming time delays.

Final § 75.1103–5(g), like the proposal, requires that, if the warning signal will be activated during calibration of sensors, personnel manning the surface location must be notified prior to and upon completion of calibration. The final rule is changed to require that the notification be provided to affected working sections and other areas where miners may be endangered.

This requirement is necessary so that miners know that a warning signal is not a fire. This will apply only at mines where calibration of sensors would cause activation of warning signals; many sensors have a calibration mode, where warning signals are blocked during calibration.

A commenter stated that the proposal could be read to require that notice be provided to each miner before calibration of sensors can begin. Another commenter supported the proposal.

Under the proposal, MSHA did not intend that the mine operator directly notify each miner on the section before calibration of sensors can begin. The mine operator must assure that appropriate personnel on the section are notified, who will then be responsible for informing other miners of warning signals caused by calibration.

Final § 75.1103–5(h), like the proposal, requires that if any fire detection component becomes inoperative, immediate action must be taken to repair the component. While repairs are being made, the belt may continue to operate if the requirements in final §§ 75.1103–5(h)(1) through (h)(6) are met.

Final § 75.1103–5(h)(1), like the proposal, requires that when only one sensor is inoperative, continued operation of the belt is permitted when a trained person is stationed at the sensor and monitors the air for carbon monoxide using a hand-held detector.

Final § 75.1103–5(h)(2), like the proposal, requires that when two or more adjacent sensors are inoperative, continued operation of the belt is permitted if the area monitored by these sensors is patrolled so the area is traveled each hour in its entirety. Alternatively, a trained person must be stationed at each inoperative sensor to monitor for carbon monoxide.

Final § 75.1103–5(h)(3), like the proposal, requires that if the complete fire detection system becomes inoperative continued operation of the belt is permitted if the area monitored by these sensors is patrolled so the area is traveled each hour in its entirety.

Final § 75.1103–5(h)(4), like the proposal, requires the trained persons who conduct monitoring under the final rule to have two-way voice communication capability at intervals not to exceed 2,000 feet. The final rule requires that persons conducting monitoring must report carbon monoxide levels to the surface at intervals not to exceed one hour.

Final § 75.1103–5(h)(5), like the proposal, requires that trained persons who conduct monitoring under the final rule to immediately report to the surface any concentration of carbon monoxide that reaches 10 parts per million above the established ambient level, unless the mine operator knows that the source of the carbon monoxide does not present a hazard to miners.

Final § 75.1103–5(h)(6), like the proposal, requires that handheld detectors used to monitor the belt entry under the final rule have a detection level equivalent to that of the carbon monoxide sensors.

These requirements assure that repairs are made in a timely manner so that the fire detection system will remain capable of warning miners of a fire in the belt entry. Otherwise, the belt must be taken out of service until necessary repairs are made. A commenter supported the proposal.

Section 75.1103–6—Automatic Fire Sensors; Actuation of Fire Suppression Systems

Final § 75.1103–6, like the proposal, specifies that point-type heat sensors or automatic fire sensor and warning device systems may be used to activate fire suppression systems.

Although the Panel recommended discontinuing the use of point-type heat sensors for fire detection, it recognized a benefit in allowing them to be used for activating fire suppression systems. Consistent with the Panel's recommendation, point-type heat sensors may continue to be used to actuate deluge-type water systems, foam generator systems, multipurpose dry-powder systems, or other equivalent automatic fire suppression systems. A commenter supported the proposal.

Section 75.1103–8—Automatic Fire Sensor and Warning Device Systems; Examination and Test Requirements

Final § 75.1103–8(a), like the proposal, requires that automatic fire sensor and warning device systems be examined at least once each shift when belts are operated as part of a production shift, and a functional test of the warning signals be made at least once every seven days. The final rule does not include the term inspection that was in the proposal to clarify that examination and maintenance of the system must be made by a qualified person.

Increased frequency of examinations and functional tests of the system better assures that the system will effectively maintain its fire warning capability so that it can provide adequate warning to miners in the event of a fire. The increased examinations will also alert the mine operator to any damaged or missing sensors and alarm units.

Under the final rule, the functional test must be completed at intervals not to exceed 7 days. MSHA expects the functional test to verify that warning signals are effective at all locations where these signals are provided. Consistent with existing practice, MSHA expects that functional tests will include application of carbon monoxide gas to the sensors necessary to activate each warning signal. These functional tests are needed to assure that the system retains its fire warning capability so that it will provide the proper warning signal in case of emergency.

The Agency believes that the examination requirements can be integrated into required preshift and on-shift examinations under existing §§ 75.360 and 75.362. The examinations should identify any problems with sensors such as improper installation, damaged or missing sensors, cables and alarm units.

A commenter objected to the weekly testing requirement in the proposal. Other commenters stated that presently carbon monoxide sensors are tested and calibrated monthly and that increasing the frequency of testing will increase maintenance costs and reduce the life of carbon monoxide sensors. These commenters also requested clarification on whether the functional testing could be performed monthly.

Commenters also requested that the Agency clarify the terms inspection and examination, which are used interchangeably in the proposal. These commenters also requested clarification on whether a functional test must be performed on each sensor every seven days and whether gas must be applied

as part of the testing procedure. They stated that weekly testing would be burdensome for large mines and that monthly functional testing and calibration would be sufficient.

Another commenter supported the proposal, stating that it provided the upkeep needed for the carbon monoxide sensors to maintain their accuracy.

Under the final rule, the weekly functional test does not require carbon monoxide to be applied to every sensor. The purpose of the test is to determine if the alarm units are working properly. Carbon monoxide only needs to be applied to a sufficient number of sensors to activate every alarm. For example, to satisfy this requirement, carbon monoxide could be applied to only one sensor on each section to activate the alarm. Alternatively, a single sensor could be installed on the surface or underground that is programmed to activate all alarms in the mine.

The functional test must be conducted at least once every seven days. The seven-day frequency is consistent with the Agency's existing testing procedures for carbon monoxide sensors for all mines using these sensors in lieu of point-type heat sensors. The functional tests are currently being performed, either as part of an approved mine ventilation plan or a granted petition for modification.

Final § 75.1103–8(b), like the proposal, requires that the mine operator maintain a record of the functional tests and keep the records for a period of one year.

Maintaining records for one year is consistent with other recordkeeping requirements, and would indicate to MSHA how warning signals operate over the course of a year. Like the proposal, the final rule deletes the existing requirement that a record card of the weekly inspection of point-type heat sensors be kept at each belt drive since the final rule requires carbon monoxide sensors.

Commenters requested that the final rule specify where the records of functional tests are to be located and maintained. Under the final rule, mine operators can determine how and where records would be maintained so long as they are kept for a period of one year.

Final § 75.1103–8(c), like the proposal, requires that carbon monoxide sensors be calibrated according to manufacturer's instructions at intervals not to exceed 31 days. In addition, the final rule requires a record of sensor calibrations to be kept for a period of one year.

MSHA experience and data have shown this interval to be an appropriate time period to assure that carbon monoxide sensors respond effectively and reliably in the event of a fire. The record will provide the mine operator with information to make necessary repairs and maintain the system, and will allow MSHA to verify that these corrective actions were taken in a timely manner. Comments supported the proposal.

The final rule also makes conforming changes to existing § 75.1103–10. The final rule removes the reference to belt that is not fire resistant and to the maximum distance between point-type heat sensors. No substantive changes were made to the existing standard.

Subpart R—Miscellaneous

Section 75.1731—Maintenance of Belt Conveyors and Belt Conveyor Entries

Final § 75.1731(a) modifies the proposal, and requires that damaged rollers, or other damaged belt conveyor components, which pose a fire hazard must be immediately repaired or replaced. Under the final rule, all other damaged rollers, or other damaged belt conveyor components, must be repaired or replaced.

Final § 75.1731(b), like the proposal, requires that conveyor belts be properly aligned to prevent the moving belt from rubbing against the support structure or components.

Final § 75.1731(c) modifies the proposal, and prohibits materials in the belt conveyor entry where the material may contribute to a frictional heating hazard.

Final § 75.1731(d), like the proposal, requires that splicing of any approved conveyor belt must maintain flame-resistant properties of the belt.

These requirements address Panel Recommendations 1, 5, 6 and 14 regarding belt entry and conveyor belt maintenance. They apply to all underground coal mines using belt haulage.

In its report, the Panel recommended that MSHA rigorously enforce existing standards on underground conveyor belt maintenance and fire protection, and improve inspection procedures. The Panel also stated that MSHA should focus on required examinations of the belt lines by mine examiners to assure each belt is kept in good working order. The Panel identified the following areas for increased attention by belt examiners: belts rubbing stands; damaged rollers; inadequate rock dusting; and accumulations of materials.

In its report, the Panel cited the findings of MSHA's investigation into the Aracoma Alma Mine No. 1 belt fire as evidence of inadequate belt maintenance (MSHA Fatal Accident Report, Aracoma, Logan County, WV, 2007). MSHA identified deficiencies in belt maintenance and examinations as root causes of the fire.

MSHA believes prevention of belt fires is a critical element in improving miners' safety, and proper maintenance and examinations will reduce the likelihood of fires. Improper belt examinations can lead to uncorrected hazards. This can result in frictional heating of combustibles in the belt entry, which could cause a fire. These requirements will assure that mine operators will implement proper mine examination and maintenance procedures and that belt examiners will identify and correct hazardous conditions in the conveyor belt entry to improve safety of miners.

Existing § 75.400 addresses accumulation of combustible materials, but it does not address materials in the belt entry that may contribute to a frictional heating hazard. These materials may include rock, trash, discarded conveyor belt parts, posts, and cribs. These materials may become potential frictional ignition sources and result in a belt fire. MSHA does not intend that these materials include rock dust used in the belt entry.

It is essential that any splices in the belt maintain the fire resistant properties of the belt so that the belt will continue to perform as intended in the approval and it will not easily ignite or be a source of fuel for a fire. MSHA recognizes the need to address splicing of the belt so that the materials and processes used in splicing do not compromise the flame resistant properties of the belt. Because splicing is a belt maintenance issue, it is included in this final rule.

A commenter stated that damaged rollers and other malfunctioning belt components can result in the frictional heating of combustibles. This commenter also stated that damaged rollers can be identified during the preshift examination and repaired or replaced at the beginning of the next shift.

Commenters requested clarification of the proposed terms damaged, malfunctioning, and immediately. Commenters also objected to the proposed term immediately because the proposal did not connect the requirement for immediate replacement of the damaged belt roller or malfunctioning component with a hazardous condition. A commenter also noted that immediate replacement of damaged belt rollers or malfunctioning components is not always feasible or practical, and that it may be more

appropriate for replacement to occur on a maintenance shift. These commenters also stated that existing regulations adequately address this concern.

In response to comments, the final rule does not include the reference to malfunctioning belt conveyor components, and clarifies that immediate repair or replacement is only required when damaged rollers, or other damaged belt conveyor components, pose a fire hazard. All other damaged rollers, or other damaged belt conveyor components, must be repaired.

A commenter stated that where the accumulation of noncombustible materials does not create an immediate fire hazard, miners should correct the condition on the next shift.

Another commenter stated that the proposal was unnecessary and vague. Commenters wanted the terms noncombustible and accumulation clarified, and the final rule to address frictional heating or ignition. These commenters wanted clarification of whether the accumulation of waste rock, rock dust, gob materials, or other noncombustible materials would be prohibited. Commenters also wanted to know whether an accumulation of noncombustible materials in a crosscut would be prohibited. Other commenters stated that existing regulations adequately address the proposal.

After reviewing all comments, the final rule is changed from the proposal to require that materials not be allowed in the belt conveyor entry if the material may contribute to a frictional heating hazard. Under the final rule, materials may be stored in crosscuts or other locations if they do not contribute to a hazard.

Existing § 75.1725(a) contains inspection and maintenance requirements applicable to mobile and stationary machinery and equipment, including conveyor belts. Based on its experience, MSHA does not believe that this standard or other existing standards appropriately address the Panel's concerns regarding potential hazards resulting from inadequate examinations by belt examiners and inadequate maintenance. These hazards are caused by misalignment of the belt, damaged rollers and other belt components, and materials that may contribute to a frictional heating hazard.

Several commenters asked how MSHA would determine that splices maintain the flame-resistant properties of the belt. During the rulemaking process, and at the public hearings, MSHA specifically raised the issue of how the Agency should determine flame resistance and indicated that the Agency was considering implementing a program to evaluate splice kits.

In response to these comments, MSHA will, at the request of approval holders or mine operators, make a suitability evaluation to determine if a splice kit maintains flame-resistant properties of the belt. This approach will be similar to the evaluations MSHA makes for stoppings and sealants. MSHA will place a list of suitable splice kits on the Agency's Web site and provide the list to interested stakeholders. Under the final rule, splice kits which have been evaluated by MSHA must be used when splicing Part 14 belts after December 31, 2009.

IV. Regulatory Economic Analysis

A. Executive Order 12866

Executive Order (E.O.) 12866 requires that regulatory agencies assess both the costs and benefits of regulations. To comply with E.O. 12866, MSHA has prepared a Regulatory Economic Analysis (REA) for the final rule. The REA contains supporting data and explanation for the summary economic materials presented in this preamble, including data on the mining industry, costs and benefits, feasibility, small business impacts, and paperwork. The REA is located on MSHA's Web site at *http://www.msha.gov/REGSINFO.HTM*. A copy of the REA can be obtained from MSHA's Office of Standards, Regulations and Variances at the address in the **ADDRESSES** section of the preamble.

Under E.O. 12866, a significant regulatory action is one meeting any of a number of specified conditions, including the following: Having an annual effect on the economy of $100 million or more, creating a serious inconsistency or interfering with an action of another agency, materially altering the budgetary impact of entitlements or the rights of entitlement recipients, or raising novel legal or policy issues. Based on the REA, MSHA has determined that the final rule will not have an annual effect of $100 million or more on the economy and that, therefore, it is not an economically significant regulatory action. MSHA has concluded that the final rule is otherwise significant because it raises novel legal or policy issues.

B. Population at Risk

The final rule will apply to all underground coal mines in the United States. As of 2007, MSHA data reveal that there were 624 underground coal mines, employing 42,207 miners, operating in the United States.

C. Benefits

MSHA has evaluated the safety benefits of the final rule on improved flame-resistant conveyor belts, fire prevention and detection, and approval of the use of air from the belt entry to ventilate the working sections in underground coal mines. The final rule will implement Section 11 of the MINER Act and the recommendations of the Technical Study Panel (Panel) on the Utilization of Belt Air and The Composition and Fire Retardant Properties of Belt Materials in Underground Coal Mining.

The final rule on improved flame-resistant conveyor belts will reduce belt entry fires in underground coal mines and will prevent related fatalities and injuries. From 1980 to 2007, there were 65 reportable belt entry fires. Almost all involved the conveyor belt itself. These fires caused over two dozen injuries and three deaths—one in 1986 at the Florence No. 1 Mine, and two in 2006 at the Aracoma Alma No. 1 Mine. The Technical Study Panel noted that the number of belt fires had decreased over the past decade, but that the rate (*i.e.*, number of fires per thousand mines) has remained constant. The Panel also noted that during this same period, although underground coal production increased so that the number of belt fires per 100 million tons decreased, there was high variability from year to year. The final rule will prevent conveyor belt fires and, in turn, reduce accidents, injuries, and deaths caused by conveyor belt fires.

The final rule on fire prevention and detection and approval of the use of air from the belt entry in underground coal mines will improve miner safety. The requirements addressing maintenance of the belt conveyor and belt conveyor entry will improve safety of miners by requiring related hazards to be corrected. These hazards, known to be sources of belt fire ignitions, include damaged and missing rollers and belt misalignment. For example, the MSHA Investigation Report of the Aracoma Alma Mine No.1 fire determined that the fire occurred as a result of the frictional heating due to a misaligned belt. The final rule will also require that damaged components be repaired or replaced and that materials contributing to a frictional heating hazard not be allowed in the belt entry.

The requirement to replace point-type heat sensors with carbon monoxide sensors for fire detection along belt conveyors in all underground coal mines will enhance miner safety because carbon monoxide sensors provide earlier fire detection. Earlier fire

detection allows miners to better address the problem and/or evacuate the area. MSHA's research and accident investigation reports indicate that carbon monoxide sensors are superior to point-type heat sensors. For example, in the 1992 Dilworth Mine fire, the point-type heat sensors were no more than 27 feet away, but the carbon monoxide sensor that actually detected the fire was 1,400 feet downwind of the fire. Based on MSHA's research and experience, replacing point-type heat sensors with carbon monoxide sensors is an improvement in early fire warning detection.

Inadequate Atmospheric Monitoring System (AMS) operator training was identified as a contributing factor in the two fatalities in the Aracoma fire. Accident investigators found all miners assigned the duties of an AMS operator at this mine needed additional training to properly respond to alert, alarm, and malfunction signals generated by the AMS. The requirement for AMS operator training will improve safety for miners by assuring that AMS operators will have the knowledge to respond properly to AMS signals. The training of miners as AMS operators will assure that MSHA has oversight in the development and approval of the task training, and annual retraining requirements will assure that AMS operators retain knowledge and training needed to perform specific duties and responsibilities. These training requirements will also assure that AMS operators are familiar with underground mining systems such as coal haulage, transportation, ventilation, and escape facilities.

The requirement for a higher ventilating pressure in the primary escapeway than the belt entry will assure that air leakage moves from this escapeway to the belt entry. If a fire were to occur in the belt entry, the primary escapeway will not become contaminated with smoke and carbon monoxide, thus maintaining the integrity of the escapeway and providing a safe means of egress for miners.

The requirement for lifelines to be marked with standardized tactile signals will aid miners evacuating the mine where visibility is obscured by smoke. New standardized signals will be required to: Identify the location of personnel doors in adjacent crosscuts connected to adjacent escapeways; and identify the location of refuge alternatives. Existing signals for direction of travel and SCSR storage locations will also be standardized. Standardization will allow for uniform understanding of the signals so that miners who transfer between mines will not need to learn new signal systems, and will reduce the possibility of confusion, delay, or injury during an emergency.

D. Compliance Costs [1]

MSHA estimated the first year costs and the yearly costs of the final rule. MSHA estimated costs to mine operators for the following requirements: Improved flame-resistant conveyor belt; installation and maintenance of carbon monoxide sensors in all underground coal mines; improved maintenance of conveyor belts and conveyor belt entries; AMS operator duties; standardized lifeline signals; installation of airlocks along escapeways; maintaining higher pressure in the escapeway than the belt entry; and an additional sensor and alarm unit on point-feed regulators in mines using air from the belt entry.

MSHA estimates total first year costs will be approximately $65 million, including approximately $44 million for the improved flame-resistant belts, and approximately $21 million for the remaining requirements.

MSHA estimates that the final rule will result in total yearly costs of approximately $52 million, including approximately $100,000 in yearly costs to manufacturers of conveyor belts. Yearly costs will be approximately $5 million for mine operators with fewer than 20 employees, approximately $21,000 per mine for the 223 mines in this size category. Yearly costs will be approximately $43 million for mine operators with 20–500 employees, approximately $110,000 per mine for the 391 mines in this size category. Yearly costs will be approximately $4 million for mine operators with more than 500 employees, approximately $410,000 per mine for the 10 mines in this size category.

The $52 million in yearly costs consist of approximately: $40.4 million for improved flame-resistant conveyor belt; $6.3 million for installation and maintenance of carbon monoxide sensors in all underground coal mines; $3.5 million for improved maintenance of conveyor belts and conveyor belt entries; $1 million for AMS operator duties; $150,000 for standardized lifeline signals; and $73,000 for other provisions mentioned above.

MSHA estimates the yearly cost for smoke sensors to be approximately $460,000; however, this amount is based on the cost of existing smoke sensors and may not reflect their actual cost when approved for underground mine use. Therefore, this cost is not included in the yearly costs of the final rule.

Table 1 is a summary of the approximate yearly costs of the final rule by mine size and requirement.

TABLE 1

Final provisions	1–19 employees	20–500 employees	501+ employees	Total
Improved Flame Resistant Belt	$3.3 million	$33.4 million	$3.8 million	$40.4 million.
Improved Flame Resistant Belt (Manufacturers)	n/a	n/a	n/a	$100,000.
CO Sensors	$660,000	$5.5 million	$180,000	$6.3 million.
Maintenance of belts and belt entries	$750,000	$2.6 million	$130,000	$3.5 million.
AMS Operator duties	$57,000	$960,000	$29,000	$1 million.
Lifeline signals	$16,000	$130,000	$7,300	$150,000.
Other provisions	$1,500	$64,000	$7,800	$73,000.
Total	$5 million	$43 million	$4 million	$52 million.

[1] All costs have been rounded; therefore, some total costs may deviate slightly from the sum of individual costs.

V. Feasibility

MSHA has concluded that the requirements of the final rule will be both technologically and economically feasible.

A. Technological Feasibility

The final rule does not involve activities on the frontiers of scientific knowledge. Aside from final § 75.351(e)(2), compliance with the provisions of the final rule is technologically feasible because the materials, equipment, and methods for implementing these requirements currently exist.

Final section 75.351(e)(2) will require mines that use air from the belt entry to ventilate working sections to install smoke sensors one year after approval for use in underground coal mines. At the current time, smoke sensors are not technologically feasible because these sensors are not reliable for use in underground coal mining. MSHA will notify the public when smoke sensors are approved for use in underground coal mining and become available.

B. Economic Feasibility

The yearly compliance cost of the final rule will be approximately $51.5 million for underground coal mines, which is 0.37 percent of annual revenue of $14.0 billion for all underground coal mines. MSHA concludes that the final rule will be economically feasible for these mines because the total yearly compliance cost is below one percent of the estimated annual revenue for all underground coal mines.

VI. Regulatory Flexibility Act and Small Business Regulatory Enforcement Fairness Act

Under the Regulatory Flexibility Act (RFA) of 1980, as amended by the Small Business Regulatory Enforcement Fairness Act (SBREFA), MSHA has analyzed the impact of the final rule on small entities. Based on that analysis, MSHA has notified the Chief Counsel for Advocacy, Small Business Administration (SBA), and made the certification under the RFA at 5 U.S.C. 605(b) that the final rule will not have a significant economic impact on a substantial number of small entities. The factual basis for this certification is in the REA and summarized below.

A. Definition of a Small Mine

Under the RFA, in analyzing the impact of the final rule on small entities, MSHA must use the SBA definition for a small entity, or after consultation with the SBA Office of Advocacy, establish an alternative definition for the mining industry by publishing that definition in the **Federal Register** for notice and comment. MSHA has not established an alternative definition and is required to use the SBA definition. The SBA defines a small entity in the mining industry as an establishment with 500 or fewer employees.

MSHA has also examined the impact of the final rule on underground coal mines with fewer than 20 employees, which MSHA has traditionally referred to as ''small mines.'' These small mines differ from larger mines not only in the number of employees, but also in economies of scale in material produced, in the type and amount of production equipment, and in supply inventory. Therefore, the cost of complying with MSHA's final rule and the impact of the final rule on small mines will also be different.

This analysis complies with the legal requirements of the RFA for an analysis of the impact on ''small entities'' while continuing MSHA's traditional concern for ''small mines.''

B. Factual Basis for Certification

MSHA initially evaluates the impact on small entities by comparing the estimated compliance cost of a rule for small entities in the sector affected by the rule to the estimated revenue of the affected sector. When the estimated compliance cost is less than one percent of the estimated revenue, the Agency believes it is generally appropriate to conclude that the rule will not have a significant economic impact on a substantial number of small entities. When the estimated compliance cost exceeds one percent of revenue, MSHA investigates whether further analysis is required.

Total underground coal production in 2007 was approximately 278 million tons for mines with 500 or fewer employees. Using the 2007 price of underground coal of $40.29 per ton, MSHA estimates that underground coal revenue was approximately $11.2 billion for mines with 500 or fewer employees. The yearly cost of the final rule for mines with 500 or fewer employees is estimated to be approximately $47.4 million, or approximately $77,000 per mine. This is equal to approximately 0.42 percent of annual revenue. Since the yearly cost of the final rule is less than one percent of annual revenues for small underground coal mines, as defined by SBA, MSHA has certified that the final rule will not have a significant impact on a substantial number of small mining entities, as defined by SBA.

Total underground coal production in 2007 was approximately 7.7 million tons for mines with fewer than 20 employees. Using the 2007 price of underground coal of $40.29 per ton, MSHA estimates that underground coal revenue was approximately $310 million for mines with fewer than 20 employees. The yearly cost of the final rule for mines with fewer than 20 employees is estimated to be $4.7 million, or approximately $22,000 per mine. This is equal to approximately 1.53 percent of annual revenue.

The Agency has provided, in the REA accompanying the final rule, a complete analysis of the cost impact on this category of mines. MSHA estimates that some mines might experience costs somewhat higher than the average per mine in its size category while others might experience lower costs. Even though the analysis reflects a range of impacts for different mine sizes, from 0.42 to 1.53 percent of annual revenue, as noted above, MSHA has certified that the final rule will not have a significant impact on a substantial number of small mining entities, as defined by SBA.

VII. Paperwork Reduction Act

A. Summary

The information collection package for the final rule has been assigned OMB Control Number 1219–0145. The final rule contains information collection requirements (ICR) that will affect requirements in existing paperwork packages with OMB Control Numbers 1219–0009, 1219–0054, 1219–0066, 1219–0073, and 1219–0088. The requirement for AMS operator training will modify ICR 1219–0009. The requirements for fire protection will modify ICR 1219–0054. The requirements that affect the information collected for approval of flame-resistant conveyor belts will modify ICR 1219–0066. The requirements to amend the mine map will modify ICR 1219–0073. The requirements that affect the information contained in the ventilation plan for underground coal mines will modify ICR 1219–0088.

In the first year that the final rule is in effect, mine operators will incur 3,344 burden hours with related costs of approximately $240,000. Annually, starting in the second year that the final rule is in effect, mine operators will incur 2,350 burden hours with related costs of approximately $180,000. In addition, conveyor belt manufacturers will incur 540 burden hours and related costs of $27,000 in the first year that the final rule is in effect; 270 burden hours and related costs of $13,500 in the second year that the final rule is in effect; and 170 burden hours and related

costs of $8,500 in the third year that the final rule is in effect.

Final § 14.7, which requires approval holders to retain initial sales records of conveyor belts, is considered by MSHA to be an information collection requirement that does not result in a paperwork burden because it is considered a part of normal business practices.

For a summary of the burden hours and related costs by final provision, see the REA accompanying the final rule. The REA is posted on MSHA's Web site at *http://www.msha.gov/REGSINFO.HTM.* A copy of the REA can be obtained from MSHA's Office of Standards, Regulations, and Variances at the address provided in the **ADDRESSES** section of this preamble.

B. Procedural Details

The information collection package, OMB Control Number 1219–0145, has been submitted to OMB for review under 44 U.S.C. 3504, paragraph (h) of the Paperwork Reduction Act of 1995, as amended. A copy of the information collection package can be obtained from the Department of Labor by electronic mail request to *king.darrin@dol.gov* or by phone request to 202–693–4129.

Paperwork requirements contained in proposed §§ 14.4(b) and 75.350(b) received comments. A commenter stated that the actual formulation data required to be submitted to MSHA under proposed § 14.4(b) is more extensive than currently required and is not needed since approval is based solely on the BELT results. Another commenter stated that proposed § 14.4(b)(4) was confusing. Other commenters also were concerned with proposed provision § 75.350(b) that set out additional requirements to be included in the mine ventilation plan. These comments are addressed in earlier sections of this preamble and in the information collection package supporting this final rule (OMB control number 1219–0145).

VIII. Other Regulatory Considerations

A. The Unfunded Mandates Reform Act of 1995

MSHA has reviewed the final rule under the Unfunded Mandates Reform Act of 1995 (2 U.S.C. 1501 *et seq.*). MSHA has determined that the final rule will not include any Federal mandate that may result in increased expenditures by State, local, or tribal governments; and it will not increase private sector expenditures by more than $100 million in any one year or significantly or uniquely affect small governments. Accordingly, the Unfunded Mandates Reform Act of 1995 requires no further agency action or analysis.

B. Treasury and General Government Appropriations Act of 1999: Assessment of Federal Regulations and Policies on Families

The final rule will have no effect on family well-being or stability, marital commitment, parental rights or authority, or income or poverty of families and children. Accordingly, § 654 of the Treasury and General Government Appropriations Act of 1999 (5 U.S.C. 601 note) requires no further agency action, analysis, or assessment.

C. Executive Order 12630: Government Actions and Interference With Constitutionally Protected Property Rights

The final rule will not implement a policy with takings implications. Accordingly, Executive Order 12630 requires no further agency action or analysis.

D. Executive Order 12988: Civil Justice Reform

The final rule was written to provide a clear legal standard for affected conduct and was carefully reviewed to eliminate drafting errors and ambiguities, so as to minimize litigation and undue burden on the Federal court system. Accordingly, the final rule meets the applicable standards provided in § 3 of Executive Order 12988.

E. Executive Order 13045: Protection of Children From Environmental Health Risks and Safety Risks

The final rule will have no adverse impact on children. Accordingly, Executive Order 13045 requires no further agency action or analysis.

F. Executive Order 13132: Federalism

The final rule will not have ''federalism implications'' because it will not ''have substantial direct effects on the States, on the relationship between the national government and the States, or on the distribution of power and responsibilities among the various levels of government.'' Accordingly, Executive Order 13132 requires no further agency action or analysis.

G. Executive Order 13175: Consultation and Coordination With Indian Tribal Governments

The final rule will not have ''tribal implications'' because it will not ''have substantial direct effects on one or more Indian tribes, on the relationship between the Federal government and Indian tribes, or on the distribution of power and responsibilities between the Federal government and Indian tribes.'' Accordingly, Executive Order 13175 requires no further agency action or analysis.

H. Executive Order 13211: Actions Concerning Regulations That Significantly Affect Energy Supply, Distribution, or Use

The final rule has been reviewed for its impact on the supply, distribution, and use of energy because it applies to the coal mining industry. Because the final rule will result in yearly costs of approximately $51.5 million to the underground coal mining industry, relative to annual revenues of $14.0 billion in 2007, the final rule is not a ''significant energy action'' because it is not ''likely to have a significant adverse effect on the supply, distribution, or use of energy * * * (including a shortfall in supply, price increases, and increased use of foreign supplies).'' Accordingly, Executive Order 13211 requires no further Agency action or analysis.

I. Executive Order 13272: Proper Consideration of Small Entities in Agency Rulemaking

MSHA has reviewed the final rule to assess and take appropriate account of its potential impact on small businesses, small governmental jurisdictions, and small organizations. MSHA has determined and certified that the final rule will not have a significant economic impact on a substantial number of small entities.

IX. Final Rule

List of Subjects

30 CFR Part 6

Testing and evaluation by independent laboratories and non-MSHA product safety standards, Mine safety and health.

30 CFR Part 14

Approval of equipment, Mine safety and health, Underground mining.

30 CFR Part 18

Electric motor-driven mine equipment and accessories, Mine safety and health.

30 CFR Part 48

Training and retraining of miners, Mine safety and health.

30 CFR Part 75

Mandatory safety standards—Underground coal mines, Mine safety and health, Recordkeeping.

Dated: November 18, 2008.

Richard E. Stickler,

Acting Assistant Secretary for Mine Safety and Health.

■ For the reasons set out in the preamble, and under the authority of the Federal Mine Safety and Health Act of 1977 as amended by the Mine Improvement and New Emergency Response Act of 2006, MSHA is amending chapter I of title 30 of the Code of Federal Regulations as follows:

PART 6—TESTING AND EVALUATION BY INDEPENDENT LABORATORIES AND NON-MSHA PRODUCT SAFETY STANDARDS

■ 1. The authority citation for part 6 continues to read as follows:

Authority: 30 U.S.C. 957.

■ 2. Amend § 6.2 by revising the definition of ''Equivalent non-MSHA product safety standards'' to read as follows:

§ 6.2 Definitions.

* * * * *

Equivalent non-MSHA product safety standards. A non-MSHA product safety standard, or group of standards, determined by MSHA to provide at least the same degree of protection as the applicable MSHA product approval requirements in parts 14, 18, 19, 20, 22, 23, 27, 33, 35, and 36, or which in modified form provide at least the same degree of protection.

* * * * *

■ 3. Amend § 6.20 to revise paragraph (a)(1) to read as follows:

§ 6.20 MSHA acceptance of equivalent non-MSHA product safety standards.

(a) * * *

(1) Provide at least the same degree of protection as MSHA's product approval requirements in parts 14, 18, 19, 20, 33, 35 and 36 of this chapter; or

* * * * *

■ 4. Add new Part 14 to subchapter B chapter I, title 30 of Code of Federal Regulations to read as follows:

PART 14—REQUIREMENTS FOR THE APPROVAL OF FLAME-RESISTANT CONVEYOR BELTS

Subpart A—General Provisions

Sec.
14.1 Purpose and effective date for approval holders.
14.2 Definitions.
14.3 Observers at tests and evaluations.
14.4 Application procedures and requirements.
14.5 Test samples.
14.6 Issuance of approval.
14.7 Approval marking and distribution records.
14.8 Quality assurance.
14.9 Disclosure of information.
14.10 Post-approval product audit.
14.11 Revocation.

Subpart B—Technical Requirements

14.20 Flame resistance.
14.21 Laboratory-scale flame test apparatus.
14.22 Test for flame resistance of conveyor belts.
14.23 New technology.

Authority: 30 U.S.C. 957.

Subpart A—General Provisions

§ 14.1 Purpose, effective date for approval holders.

This Part establishes the flame resistance requirements for MSHA approval of conveyor belts for use in underground coal mines. Applications for approval or extensions of approval submitted after December 31, 2008, must meet the requirements of this Part.

§ 14.2 Definitions.

The following definitions apply in this part:

Applicant. An individual or organization that manufactures or controls the production of a conveyor belt and applies to MSHA for approval of conveyor belt for use in underground coal mines.

Approval. A document issued by MSHA, which states that a conveyor belt has met the requirements of this Part and which authorizes an approval marking identifying the conveyor belt as approved.

Extension of approval. A document issued by MSHA, which states that a change to a product previously approved by MSHA meets the requirements of this Part and which authorizes the continued use of the approval marking after the appropriate extension number has been added.

Flame-retardant ingredient. A material that inhibits ignition or flame propagation.

Flammable ingredient. A material that is capable of combustion.

Inert ingredient. A material that does not contribute to combustion.

Post-approval product audit. An examination, testing, or both, by MSHA of an approved conveyor belt selected by MSHA to determine if it meets the technical requirements and has been manufactured as approved.

Similar conveyor belt. A conveyor belt that shares the same cover compound, general carcass construction, and fabric type as another approved conveyor belt.

§ 14.3 Observers at tests and evaluations.

Representatives of the applicant and other persons agreed upon by MSHA and the applicant may be present during tests and evaluations conducted under this Part. However, if MSHA receives a request from others to observe tests, the Agency will consider it.

§ 14.4 Application procedures and requirements.

(a) *Application address.* Applications for approvals or extensions of approval under this Part may be sent to: U.S. Department of Labor, Mine Safety and Health Administration, Chief, Approval and Certification Center, 765 Technology Drive, Triadelphia, West Virginia 26059. Alternatively, applications for approval or extensions of approval may be filed online at *http://www.msha.gov* or faxed to: Chief, Mine Safety and Health Administration Approval and Certification Center at 304–547–2044.

(b) *Approval application.* Each application for approval of a conveyor belt for use in underground coal mines must include the information below, except any information submitted in a prior approval application need not be re-submitted, but must be noted in the application.

(1) A technical description of the conveyor belt, which includes:

(i) Trade name or identification number;

(ii) Cover compound type and designation number;

(iii) Belt thickness and thickness of top and bottom covers;

(iv) Presence and type of skim coat;

(v) Presence and type of friction coat;

(vi) Carcass construction (number of plies, solid woven);

(vii) Carcass fabric by textile type and weight (ounces per square yard);

(viii) Presence and type of breaker or floated ply; and

(ix) The number, type, and size of cords and fabric for metal cord belts.

(2) The name, address, and telephone number of the applicant's representative responsible for answering any questions regarding the application.

(c) Similar belts and extensions of approval may be evaluated for approval without testing using the BELT method if the following information is provided in the application:

(1) Formulation information on the compounds in the conveyor belt indicated by either:

(i) Specifying each ingredient by its chemical name along with its percentage (weight) and tolerance or percentage range; or

(ii) Specifying each flame-retardant ingredient by its chemical or generic name with its percentage and tolerance or percentage range or its minimum percent. List each flammable ingredient and inert ingredient by chemical,

generic, or trade name along with the total percentage of all flammable and inert ingredients.

(2) Identification of any similar approved conveyor belt for which the applicant already holds an approval, and the formulation specifications for that belt if it has not previously been submitted to the Agency.

(i) The MSHA assigned approval number of the conveyor belt that most closely resembles the new one; and

(ii) An explanation of any changes from the existing approval.

(d) *Extension of approval.* Any change in an approved conveyor belt from the documentation on file at MSHA that affects the technical requirements of this Part must be submitted for approval prior to implementing the change. Each application for an extension of approval must include:

(1) The MSHA-assigned approval number for the conveyor belt for which the extension is sought;

(2) A description of the proposed change to the conveyor belt; and

(3) The name, address, and telephone number of the applicant's representative responsible for answering any questions regarding the application.

(e) MSHA will determine if testing, additional information, samples, or material is required to evaluate an application. If the applicant believes that flame testing is not required, a statement explaining the rationale must be included in the application.

(f) *Equivalent non-MSHA product safety standard.* An applicant may request an equivalency determination to this part under § 6.20 of this chapter, for a non-MSHA product safety standard.

(g) *Fees.* Fees calculated in accordance with Part 5 of this chapter must be submitted in accordance with § 5.40.

§ 14.5 Test samples.

Upon request by MSHA, the applicant must submit 3 precut, unrolled, flat conveyor belt samples for flame testing. Each sample must be 60 ± ¼ inches long (152.4 ± 0.6 cm) by 9 ± ⅛ inches (22.9 ± 0.3 cm) wide.

§ 14.6 Issuance of approval.

(a) MSHA will issue an approval or notice of the reasons for denying approval after completing the evaluation and testing provided in this part.

(b) An applicant must not advertise or otherwise represent a conveyor belt as approved until MSHA has issued an approval.

§ 14.7 Approval marking and distribution records.

(a) An approved conveyor belt must be marketed only under the name specified in the approval.

(b) Approved conveyor belt must be legibly and permanently marked with the assigned MSHA approval number for the service life of the product. The approval marking must be at least ½ inch (1.27 cm) high, placed at intervals not to exceed 60 feet (18.3 m) and repeated at least once every foot (0.3 m) across the width of the belt.

(c) Where the construction of a conveyor belt does not permit marking as prescribed above, other permanent marking may be accepted by MSHA.

(d) Applicants granted approval must maintain records of the initial sale of each belt having an approval marking. The records must be retained for at least 5 years following the initial sale.

§ 14.8 Quality assurance.

Applicants granted an approval or an extension of approval under this Part must:

(a) In order to assure that the finished conveyor belt will meet the flame-resistance test—

(1) Flame test a sample of each batch, lot, or slab of conveyor belts; or

(2) Flame test or inspect a sample of each batch or lot of the materials that contribute to the flame-resistance characteristic.

(b) Calibrate instruments used for the inspection and testing in paragraph (a) of this section according to the instrument manufacturer's specifications. Instruments must be calibrated using standards set by the National Institute of Standards and Technology, U.S. Department of Commerce or other nationally or internationally recognized standards. The instruments used must be accurate to at least one significant figure beyond the desired accuracy.

(c) Control production so that the conveyor belt is manufactured in accordance with the approval document. If a third party is assembling or manufacturing all or part of an approved belt, the approval holder shall assure that the product is manufactured as approved.

(d) Immediately notify the MSHA Approval and Certification Center of any information that a conveyor belt has been distributed that does not meet the specifications of the approval. This notification must include a description of the nature and extent of the problem, the locations where the conveyor belt has been distributed, and the approval holder's plans for corrective action.

§ 14.9 Disclosure of information.

(a) All proprietary information concerning product specifications and performance submitted to MSHA by the applicant will be protected.

(b) MSHA will notify the applicant or approval holder of requests for disclosure of information concerning its conveyor belts, and provide an opportunity to present its position prior to any decision on disclosure.

§ 14.10 Post-approval product audit.

(a) Approved conveyor belts will be subject to periodic audits by MSHA to determine conformity with the technical requirements upon which the approval was based. MSHA will select an approved conveyor belt to be audited; the selected belt will be representative of that distributed for use in mines. Upon request to MSHA, the approval holder may obtain any final report resulting from the audit.

(b) No more than once a year, except for cause, the approval holder, at MSHA's request, must make 3 samples of an approved conveyor belt of the size specified in § 14.5 available at no cost to MSHA for an audit. If a product is not available because it is not currently in production, the manufacturer will notify MSHA when it is available. Representatives of the applicant and other persons agreed upon by MSHA and the applicant may be present during audit tests and evaluations. MSHA will also consider requests by others to observe tests.

(c) A conveyor belt will be subject to audit for cause at any time MSHA believes the approval holder product is not in compliance with the technical requirements of the approval.

§ 14.11 Revocation.

(a) MSHA may revoke for cause an approval issued under this Part if the conveyor belt—

(1) Fails to meet the technical requirements; or

(2) Creates a danger or hazard when used in a mine.

(b) Prior to revoking an approval, the approval holder will be informed in writing of MSHA's intention to revoke. The notice will—

(1) Explain the reasons for the proposed revocation; and

(2) Provide the approval holder an opportunity to demonstrate or achieve compliance with the product approval requirements.

(c) Upon request to MSHA, the approval holder will be given the opportunity for a hearing.

(d) If a conveyor belt poses an imminent danger to the safety or health of miners, an approval may be

immediately suspended without written notice of the Agency's intention to revoke.

Subpart B—Technical Requirements

§ 14.20 Flame resistance.

Conveyor belts for use in underground coal mines must be flame-resistant and:

(a) Tested in accordance with § 14.22 of this part; or

(b) Tested in accordance with an alternate test determined by MSHA to be equivalent under 30 CFR §§ 6.20 and 14.4(e).

§ 14.21 Laboratory-scale flame test apparatus.

The principal parts of the apparatus used to test for flame resistance of conveyor belts are as follows—

(a) A horizontal test chamber 66 inches (167.6 cm) long by 18 inches (45.7 cm) square (inside dimensions) constructed from 1 inch (2.5 cm) thick Marinite I®, or equivalent insulating material.

(b) A 16-gauge (0.16 cm) stainless steel duct section which tapers over a length of at least 24 inches (61 cm) from a 20 inch (51 cm) square cross-sectional area at the test chamber connection to a 12 inch (30.5 cm) diameter exhaust duct, or equivalent. The interior surface of the tapered duct section must be lined with ½ inch (1.27 cm) thick ceramic blanket insulation, or equivalent insulating material. The tapered duct must be tightly connected to the test chamber.

(c) A U-shaped gas-fueled impinged jet burner ignition source, measuring 12 inches (30.5 cm) long and 4 inches (10.2 cm) wide, with two parallel rows of 6 jets each. Each jet is spaced alternately along the U-shaped burner tube. The 2 rows of jets are slanted so that they point toward each other and the flame from each jet impinges upon each other in pairs. The burner fuel must be at least 98 percent methane (technical grade) or natural gas containing at least 96 percent combustible gases, which includes not less than 93 percent methane.

(d) A removable steel rack, consisting of 2 parallel rails and supports that form a 7 ± ⅛ inches (17.8 ± 0.3 cm) wide by 60 ± ⅛ inches (152.4 ± 0.3 cm) long assembly to hold a belt sample.

(1) The 2 parallel rails, with a 5 ± ⅛ inches (12.7 ± 0.3 cm) space between them, comprise the top of the rack. The rails and supports must be constructed of slotted angle iron with holes along the top surface.

(2) The top surface of the rack must be 8 ± ⅛ inches (20.3 ± 0.3 cm) from the inside roof of the test chamber.

§ 14.22 Test for flame resistance of conveyor belts.

(a) *Test procedures.* The test must be conducted in the following sequence using a flame test apparatus meeting the specifications of § 14.21:

(1) Lay three samples of the belt, 60 ± ¼ inches (152.4 ± 0.6 cm) long by 9 ± ⅛ inches (22.9 ± 0.3 cm) wide, flat at a temperature of 70 ± 10° Fahrenheit (21 ± 5° Centigrade) for at least 24 hours prior to the test;

(2) For each of three tests, place one belt sample with the load-carrying surface facing up on the rails of the rack so that the sample extends 1 ± ⅛ inch (2.5 ± 0.3 cm) beyond the front of the rails and 1 ± ⅛ inch (2.5 ± 0.3 cm) from the outer lengthwise edge of each rail;

(3) Fasten the sample to the rails of the rack with steel washers and cotter pins. The cotter pins shall extend at least ¾ inch (1.9 cm) below the rails. Equivalent fasteners may be used. Make a series of 5 holes approximately 9/32 inch (0.7 cm) in diameter along both edges of the belt sample, starting at the first rail hole within 2 inches (5.1 cm) from the front edge of the sample. Make the next hole 5 ± ¼ inches (12.7 ± 0.6 cm) from the first, the third hole 5 ± ¼ inches (12.7 ± 0.6 cm) from the second, the fourth hole approximately midway along the length of the sample, and the fifth hole near the end of the sample. After placing a washer over each sample hole, insert a cotter pin through the hole and spread it apart to secure the sample to the rail;

(4) Center the rack and sample in the test chamber with the front end of the sample 6 ± ½ inches (15.2 ± 1.27 cm) from the entrance;

(5) Measure the airflow with a 4-inch (10.2 cm) diameter vane anemometer, or an equivalent device, placed on the centerline of the belt sample 12 ± ½ inches (30.5 ± 1.27 cm) from the chamber entrance. Adjust the airflow passing through the chamber to 200 ± 20 ft/min (61 ± 6 m/min);

(6) Before starting the test on each sample, the inner surface temperature of the chamber roof measured at points 6 ± ½, 30 ± ½, and 60 ± ½ inches (15.2 ± 1.27, 76.2 ± 1.27, and 152.4 ± 1.27 cm) from the front entrance of the chamber must not exceed 95° Fahrenheit (35° Centigrade) at any of these points with the specified airflow passing through the chamber. The temperature of the air entering the chamber during the test on each sample must not be less than 50° Fahrenheit (10° Centigrade);

(7) Center the burner in front of the sample's leading edge with the plane, defined by the tips of the burner jets, ¾ ± ⅛ inch (1.9 ± 0.3 cm) from the front edge of the belt;

(8) With the burner lowered away from the sample, set the gas flow at 1.2 ± 0.1 standard cubic feet per minute (SCFM) (34 ± 2.8 liters per minute) and then ignite the gas burner. Maintain the gas flow to the burner throughout the 5 to 5.1 minute ignition period;

(9) After applying the burner flame to the front edge of the sample for a 5 to 5.1 minute ignition period, lower the burner away from the sample and extinguish the burner flame;

(10) After completion of each test, determine the undamaged portion across the entire width of the sample. Blistering without charring does not constitute damage.

(b) *Acceptable performance.* Each tested sample must exhibit an undamaged portion across its entire width.

(c) MSHA may modify the procedures of the flammability test for belts constructed of thicknesses more than ¾ inch (1.9 cm).

§ 14.23 New technology.

MSHA may approve a conveyor belt that incorporates technology for which the requirements of this part are not applicable if the Agency determines that the conveyor belt is as safe as those which meet the requirements of this part.

PART 18—ELECTRIC MOTOR-DRIVEN MINE EQUIPMENT AND ACCESSORIES

■ 5. The authority citation for Part 18 continues to read as follows:

Authority: 30 U.S.C. 957, 961.

§ 18.1 [Amended]

■ 6. Section 18.1 is amended by revising the phrase ''hoses and conveyor belts'' to read ''hoses''.

§ 18.2 [Amended]

■ 7. Section 18.2 is amended by revising the phrase ''hose or conveyor belt'' to read ''hose'' in the definitions of ''Acceptance'', ''Acceptance Marking'', and ''Applicant'' and removing the definition for ''Fire-resistant''.

§ 18.6 [Amended]

■ 8. Section 18.6(a)(1) is amended by revising the phrase ''hose or conveyor belt'' to read ''hose''.

■ 9. Section 18.6(c) is removed and reserved.

■ 10. Section 18.6(i) is amended by revising the phrase ''hose or conveyor belt'' to read ''hose'' and removing the words ''conveyor belt—a sample of each type 8 inches long cut across the entire width of the belt''.

§ 18.9 [Amended]

■ 11. Section 18.9(a) is amended by revising the phrase ''hose or conveyor belt'' to read ''hose''.

§ 18.65 [Amended]

■ 12. Section 18.65 is amended by revising the section heading to read ''Flame test of hose'' and by removing and reserving paragraph (a)(1) and removing and reserving paragraph (f)(1).

PART 48—TRAINING AND RETRAINING OF MINERS

■ 13. The authority citation for Part 48 continues to read as follows:

Authority: 30 U.S.C. 811, 825.

Subpart B—Training and Retraining of Miners Working at Surface Mines and Surface Areas of Underground Mines

■ 14. Amend § 48.27 to revise the first sentence in paragraph (a) introductory text to read as follows:

§ 48.27 Training of miners assigned to a task in which they have had no previous experience; minimum courses of instruction.

(a) Miners assigned to new work tasks as mobile equipment operators, drilling machine operators, haulage and conveyor systems operators, ground control machine operators, AMS operators, and those in blasting operations shall not perform new work tasks in these categories until training prescribed in this paragraph and paragraph (b) of this section has been completed.* * *

* * * * *

PART 75—MANDATORY SAFETY STANDARDS—UNDERGROUND COAL MINES

Subpart B—Qualified and Certified Persons

■ 15. The authority citation for Part 75 continues to read as follows:

Authority: 30 U.S.C. 811.

■ 16. Section 75.156 is added to read as follows:

§ 75.156 AMS operator, qualifications.

(a) To be qualified as an AMS operator, a person shall be provided with task training on duties and responsibilities at each mine where an AMS operator is employed in accordance with the mine operator's approved Part 48 training plan.

(b) An AMS operator must be able to demonstrate to an authorized representative of the Secretary that he/she is qualified to perform in the assigned position.

Subpart D—Ventilation

■ 17. In § 75.333, paragraph (c)(4) is added to read as follows:

§ 75.333 Ventilation controls.

* * * * *

(c) * * *

(4) An airlock shall be established where the air pressure differential between air courses creates a static force exceeding 125 pounds on closed personnel doors along escapeways.

* * * * *

■ 18. In § 75.350, paragraphs (a)(2), (b) introductory text, (b)(3), and (d)(1) are revised, and (b)(7) and (b)(8) are added to read as follows:

§ 75.350 Belt air course ventilation.

(a) * * *

(1) * * *

(2) Effective December 31, 2009, the air velocity in the belt entry must be at least 50 feet per minute. When requested by the mine operator, the district manager may approve lower velocities in the ventilation plan based on specific mine conditions. Air velocities must be compatible with all fire detection systems and fire suppression systems used in the belt entry.

(b) The use of air from a belt air course to ventilate a working section, or an area where mechanized mining equipment is being installed or removed, shall be permitted only when evaluated and approved by the district manager in the mine ventilation plan. The mine operator must provide justification in the plan that the use of air from a belt entry would afford at least the same measure of protection as where belt haulage entries are not used to ventilate working places. In addition, the following requirements must be met:

* * * * *

(3)(i) The average concentration of respirable dust in the belt air course, when used as a section intake air course, must be maintained at or below 1.0 mg/m^3.

(ii) Where miners on the working section are on a reduced standard below 1.0 mg/m^3, the average concentration of respirable dust in the belt entry must be at or below the lowest applicable respirable dust standard on that section.

(iii) A permanent designated area (DA) for dust measurements must be established at a point no greater than 50 feet upwind from the section loading point in the belt entry when the belt air flows over the loading point or no greater than 50 feet upwind from the point where belt air is mixed with air from another intake air course near the loading point. The DA must be specified and approved in the ventilation plan.

* * * * *

(7) The air velocity in the belt entry must be at least 100 feet per minute. When requested by the mine operator, the district manager may approve lower velocities in the ventilation plan based on specific mine conditions.

(8) The air velocity in the belt entry must not exceed 1,000 feet per minute. When requested by the mine operator, the district manager may approve higher velocities in the ventilation plan based on specific mine conditions.

* * * * *

(d) * * *

(1) The air current that will pass through the point-feed regulator must be monitored for carbon monoxide or smoke at a point within 50 feet upwind of the point-feed regulator. A second point must be monitored 1,000 feet upwind of the point-feed regulator unless the mine operator requests that a lesser distance be approved by the district manager in the mine ventilation plan based on mine specific conditions;

* * * * *

■ 19. Paragraph (b)(2), (e), and (q) of § 75.351 are revised to read as follows:

§ 75.351 Atmospheric monitoring systems.

* * * * *

(b) * * *

(2) The mine operator must designate an AMS operator to monitor and promptly respond to all AMS signals. The AMS operator must have as a primary duty the responsibility to monitor the malfunction, alert and alarm signals of the AMS, and to notify appropriate personnel of these signals. In the event of an emergency, the sole responsibility of the AMS operator shall be to respond to the emergency.

* * * * *

(e) *Location of sensors-belt air course.*

(1) In addition to the requirements of paragraph (d) of this section, any AMS used to monitor belt air courses under § 75.350(b) must have approved sensors to monitor for carbon monoxide at the following locations:

(i) At or near the working section belt tailpiece in the air stream ventilating the belt entry. In longwall mining systems the sensor must be located upwind in the belt entry at a distance no greater than 150 feet from the mixing point where intake air is mixed with the belt air at or near the tailpiece;

(ii) No more than 50 feet upwind from the point where the belt air course is combined with another air course or splits into multiple air courses;

(iii) At intervals not to exceed 1,000 feet along each belt entry. However, in areas along each belt entry where air velocities are between 50 and 100 feet per minute, spacing of sensors must not exceed 500 feet. In areas along each belt entry where air velocities are less than 50 feet per minute, the sensor spacing must not exceed 350 feet;

(iv) Not more than 100 feet downwind of each belt drive unit, each tailpiece, transfer point, and each belt take-up. If the belt drive, tailpiece, and/or take-up for a single transfer point are installed together in the same air course, and the distance between the units is less than 100 feet, they may be monitored with one sensor downwind of the last component. If the distance between the units exceeds 100 feet, additional sensors are required downwind of each belt drive unit, each tailpiece, transfer point, and each belt take-up; and

(v) At other locations in any entry that is part of the belt air course as required and specified in the mine ventilation plan.

(2) Smoke sensors must be installed to monitor the belt entry under § 75.350(b) at the following locations:

(i) At or near the working section belt tailpiece in the air stream ventilating the belt entry. In longwall mining systems the sensor must be located upwind in the belt entry at a distance no greater than 150 feet from the mixing point where intake air is mixed with the belt air at or near the tailpiece;

(ii) Not more than 100 feet downwind of each belt drive unit, each tailpiece transfer point, and each belt take-up. If the belt drive, tailpiece, and/or take-up for a single transfer point are installed together in the same air course, and the distance between the units is less than 100 feet, they may be monitored with one sensor downwind of the last component. If the distance between the units exceeds 100 feet, additional sensors are required downwind of each belt drive unit, each tailpiece, transfer point, and each belt take-up; and

(iii) At intervals not to exceed 3,000 feet along each belt entry.

(iv) This provision shall be effective one year after the Secretary has determined that a smoke sensor is available to reliably detect fire in underground coal mines.

* * * * *

(q) *Training.*

(1) All AMS operators must be trained annually in the proper operation of the AMS. This training must include the following subjects:

(i) Familiarity with underground mining systems;

(ii) Basic atmospheric monitoring system requirements;

(iii) The mine emergency evacuation and firefighting program of instruction;

(iv) The mine ventilation system including planned air directions;

(v) Appropriate response to alert, alarm and malfunction signals;

(vi) Use of mine communication systems including emergency notification procedures; and

(vii) AMS recordkeeping requirements.

(2) At least once every six months, all AMS operators must travel to all working sections.

(3) A record of the content of training, the person conducting the training, and the date the training was conducted, must be maintained at the mine for at least one year by the mine operator.

* * * * *

■ 20. Section 75.352 is amended by revising paragraph (f) and by adding paragraph (g) to read as follows:

§ 75.352 Actions in response to AMS malfunction, alert, or alarm signals.

* * * * *

(f) If the minimum air velocity is not maintained when required under § 75.350(b)(7), immediate action must be taken to return the ventilation system to proper operation. While the ventilation system is being corrected, operation of the belt may continue only while a trained person(s) patrols and continuously monitors for carbon monoxide or smoke as set forth in §§ 75.352(e)(3) through (7), so that the affected areas will be traveled each hour in their entirety.

(g) The AMS shall automatically provide both a visual and audible signal in the belt entry at the point-feed regulator location, at affected sections, and at the designated surface location when carbon monoxide concentrations reach:

(1) The alert level at both point-feed intake monitoring sensors; or

(2) The alarm level at either point-feed intake monitoring sensor.

■ 21. Section 75.371 is amended by revising paragraphs (jj), (mm), (nn), and by adding paragraph (yy) to read as follows:

§ 75.371 Mine ventilation plan; contents.

* * * * *

(jj) The locations and approved velocities at those locations where air velocities in the belt entry are above or below the limits set forth in § 75.350(a)(2) or §§ 75.350(b)(7) and 75.350(b)(8).

* * * * *

(mm) The location of any diesel-discriminating sensor, and additional carbon monoxide or smoke sensors installed in the belt air course.

(nn) The length of the time delay or any other method used to reduce the number of non-fire related alert and alarm signals from carbon monoxide sensors.

* * * * *

(yy) The locations where the pressure differential cannot be maintained from the primary escapeway to the belt entry.

■ 22. Section 75.380 is amended by revising paragraphs (d)(7)(v) and (vi) and (f)(1) and adding paragraph (d)(7)(vii) to read as follows:

§ 75.380 Escapeways; bituminous and lignite mines.

* * * * *

(d) * * *

(7) * * *

(v) Equipped with one directional indicator cone securely attached to the lifeline, signifying the route of escape, placed at intervals not exceeding 100 feet. Cones shall be installed so that the tapered section points inby;

(vi) Equipped with one sphere securely attached to the lifeline at each intersection where personnel doors are installed in adjacent crosscuts;

(vii) Equipped with two securely attached cones, installed consecutively with the tapered section pointing inby, to signify an attached branch line is immediately ahead.

(A) A branch line leading from the lifeline to an SCSR cache will be marked with four cones with the base sections in contact to form two diamond shapes. The cones must be placed within reach of the lifeline.

(B) A branch line leading from the lifeline to a refuge alternative will be marked with a rigid spiraled coil at least eight inches in length. The spiraled coil must be placed within reach of the lifeline (see Illustration 1 below).

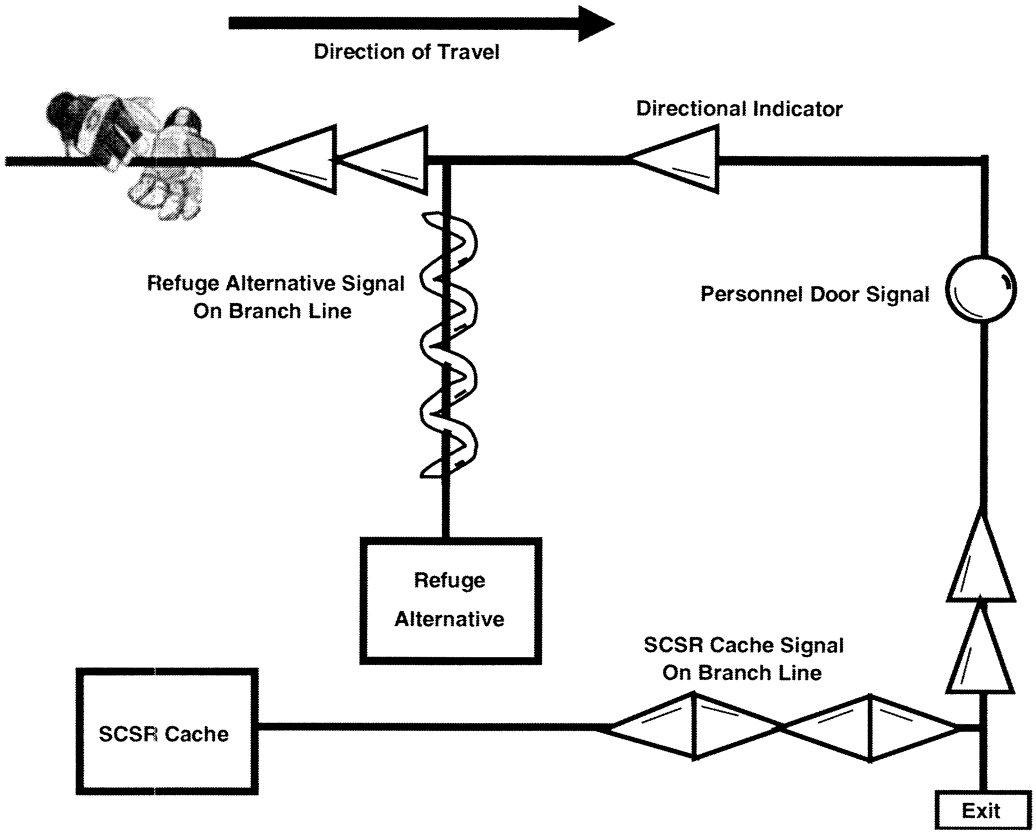

Illustration 1

* * * * *

(f) * * *

(1) One escapeway that is ventilated with intake air shall be designated as the primary escapeway. The primary escapeway shall have a higher ventilation pressure than the belt entry unless the mine operator submits an alternative in the mine ventilation plan to protect the integrity of the primary escapeway, based on mine specific conditions, which is approved by the district manager.

* * * * *

■ 23. Section 75.381 is amended by revising paragraphs (c)(5)(v) and (vi) and (e), and adding paragraph (c)(5)(vii) to read as follows:

§ 75.381 Escapeways; anthracite mines.

* * * * *

(c) * * *

* * * * *

(5) * * *

* * * * *

(v) Equipped with one directional indicator cone securely attached to the lifeline, signifying the route of escape, placed at intervals not exceeding 100 feet. Cones shall be installed so that the tapered section points inby;

(vi) Equipped with one sphere securely attached to the lifeline at each intersection where personnel doors are installed in adjacent crosscuts;

(vii) Equipped with two securely attached cones, installed consecutively with the tapered section pointing inby, to signify an attached branch line is immediately ahead.

(A) A branch line leading from the lifeline to an SCSR cache will be marked with four cones with the base sections in contact to form two diamond shapes. The cones must be placed within reach of the lifeline.

(B) A branch line leading from the lifeline to a refuge alternative will be marked with a rigid spiraled coil at least eight inches in length. The spiraled coil must be placed within reach of the lifeline.

* * * * *

(e) *Primary escapeway.* One escapeway that shall be ventilated with intake air shall be designated as the primary escapeway. The primary escapeway shall have a higher ventilation pressure than the belt entry unless the mine operator submits an alternative in the mine ventilation plan to protect the integrity of the primary escapeway, based on mine specific conditions, which is approved by the district manager.

* * * * *

Subpart L—Fire Protection

■ 24. Section 75.1103–4 is amended by revising paragraphs (a) and (b) to read as follows:

§ 75.1103–4 Automatic fire sensor and warning device systems; installation; minimum requirements.

(a) Effective December 31, 2009, automatic fire sensor and warning device systems that use carbon monoxide sensors shall provide identification of fire along all belt conveyors.

(1) Carbon monoxide sensors shall be installed at the following locations:

(i) Not more than 100 feet downwind of each belt drive unit, each tailpiece transfer point, and each belt take-up. If the belt drive, tailpiece, and/or take-up for a single transfer point are installed together in the same air course, and the distance between the units is less than 100 feet, they may be monitored with one sensor downwind of the last component. If the distance between the units exceeds 100 feet, additional sensors are required downwind of each belt drive unit, each tailpiece transfer point, and each belt take-up;

(ii) Not more than 100 feet downwind of each section loading point;

(iii) Along the belt entry so that the spacing between sensors does not

exceed 1,000 feet. Where air velocities are less than 50 feet per minute, spacing must not exceed 350 feet; and

(iv) The mine operator shall indicate the locations of all carbon monoxide sensors on the mine maps required by §§ 75.1200 and 75.1505 of this part.

(2) Where used, sensors responding to radiation, smoke, gases, or other indications of fire, shall be spaced at regular intervals to provide protection equivalent to carbon monoxide sensors, and installed within the time specified in paragraph (a)(3) of this section.

(3) When the distance from the tailpiece at loading points to the first outby sensor reaches the spacing requirements in § 75.1103–4(a)(1)(iii), an additional sensor shall be installed and put in operation within 24 production shift hours. When sensors of the kind described in paragraph (a)(2) of this section are used, they shall be installed and put in operation within 24 production shift hours after the equivalent distance which has been established for the sensor from the tailpiece at loading points to the first outby sensor is first reached.

(b) Automatic fire sensor and warning device systems shall be installed so as to minimize the possibility of damage from roof falls and the moving belt and its load. Sensors must be installed near the center in the upper third of the entry, in a manner that does not expose personnel working on the system to unsafe conditions. Sensors must not be located in abnormally high areas or in other locations where air flow patterns do not permit products of combustion to be carried to the sensors.

* * * * *

■ 25. The section heading and paragraph (a) of § 75.1103–5 are revised and paragraphs (d), (e), (f), (g) and (h) are added to read as follows:

§ 75.1103–5 Automatic fire warning devices; actions and response.

(a) When the carbon monoxide level reaches 10 parts per million above the established ambient level at any sensor location, automatic fire sensor and warning device systems shall provide an effective warning signal at the following locations:

(1) At working sections and other work locations where miners may be endangered from a fire in the belt entry.

(2) At a manned surface location where personnel have an assigned post of duty. The manned surface location must have:

(i) A telephone or equivalent communication with all miners who may be endangered and

(ii) A map or schematic that shows the locations of sensors, and the intended air flow direction at these locations. This map or schematic must be updated within 24 hours of any change in this information.

(3) The automatic fire sensor and warning device system shall be monitored for a period of 4 hours after the belt is stopped, unless an examination for hot rollers and fire is made as prescribed in § 75.1103–4(e).

* * * * *

(d) When a malfunction or warning signal is received at the manned surface location, the sensors that are activated must be identified and appropriate personnel immediately notified.

(e) Upon notification of a malfunction or warning signal, appropriate personnel must immediately initiate an investigation to determine the cause of the malfunction or warning signal and take the required actions set forth in paragraph (f) of this section.

(f) If any sensor indicates a warning, the following actions must be taken unless the mine operator determines that the signal does not present a hazard to miners:

(1) Appropriate personnel must notify miners in affected working sections, in affected areas where mechanized mining equipment is being installed or removed, and at other locations specified in the approved mine emergency evacuation and firefighting program of instruction; and

(2) All miners in the affected areas, unless assigned emergency response duties, must be immediately withdrawn to a safe location identified in the mine emergency evacuation and firefighting program of instruction.

(g) If the warning signal will be activated during calibration of sensors, personnel manning the surface location must be notified prior to and upon completion of calibration. Affected working sections, areas where mechanized mining equipment is being installed or removed, or other areas designated in the approved emergency evacuation and firefighting program of instruction must be notified at the beginning and completion of calibration.

(h) If any fire detection component becomes inoperative, immediate action must be taken to repair the component. While repairs are being made, operation of the belt may continue if the following requirements are met:

(1) If one sensor becomes inoperative, a trained person must continuously monitor for carbon monoxide at the inoperative sensor;

(2) If two or more adjacent sensors become inoperative, trained persons must patrol and continuously monitor the affected areas for carbon monoxide so that they will be traveled each hour in their entirety. Alternatively, a trained person must be stationed at each inoperative sensor to monitor for carbon monoxide;

(3) If the complete fire detection system becomes inoperative, trained persons must patrol and continuously monitor the affected areas for carbon monoxide so that they will be traveled each hour in their entirety;

(4) Trained persons who conduct monitoring under this section must have two-way voice communication capability, at intervals not to exceed 2,000 feet, and must report carbon monoxide concentrations to the surface at intervals not to exceed one hour;

(5) Trained persons who conduct monitoring under this section must immediately report to the surface any concentration of carbon monoxide that reaches 10 parts per million above the established ambient level, unless the mine operator knows that the source of the carbon monoxide does not present a hazard to miners; and

(6) Handheld detectors used to monitor the belt entry under this section must have a detection level equivalent to that of the system's carbon monoxide sensors.

■ 26. Section 75.1103–6 is revised to read as follows:

§ 75.1103–6 Automatic fire sensors; actuation of fire suppression systems.

Point-type heat sensors or automatic fire sensor and warning device systems may be used to actuate deluge-type water systems, foam generator systems, multipurpose dry-powder systems, or other equivalent automatic fire suppression systems.

■ 27. Section 75.1103–8 is revised to read as follows:

§ 75.1103–8 Automatic fire sensor and warning device systems; examination and test requirements.

(a) Automatic fire sensor and warning device systems shall be examined at least once each shift when belts are operated as part of a production shift. A functional test of the warning signals shall be made at least once every seven days. Examination and maintenance of such systems shall be by a qualified person.

(b) A record of the functional test conducted in accordance with paragraph (a) of this section shall be maintained by the operator and kept for a period of one year.

(c) Sensors shall be calibrated in accordance with the manufacturer's calibration instructions at intervals not to exceed 31 days. A record of the

sensor calibrations shall be maintained by the operator and kept for a period of one year.

■ 28. Section 75.1103–10 is revised to read as follows:

§ 75.1103–10 Fire suppression systems; additional requirements.

For each conveyor belt flight exceeding 2,000 feet in length, where the average air velocity along the belt haulage entry exceeds 100 feet per minute, an additional cache of the materials specified in § 75.1103–9(a)(1), (2), and (3) shall be provided. The additional cache may be stored at the locations specified in § 75.1103–9(a), or at some other strategic location readily accessible to the conveyor belt flight.

■ 29. Section 75.1108 is revised to read as follows:

§ 75.1108 Approved conveyor belts.

(a) Until December 31, 2009 conveyor belts placed in service in underground coal mines shall be:

(1) Approved under Part 14; or

(2) Accepted under Part 18.

(b) Effective December 31, 2009 conveyor belts placed in service in underground coal mines shall be approved under Part 14. If MSHA determines that Part 14 approved belt is not available, the Agency will consider an extension of the effective date.

(c) Effective December 31, 2018 all conveyor belts used in underground coal mines shall be approved under Part 14.

■ 30. Remove § 75.1108–1.

Subpart R—Miscellaneous

■ 31. Section 75.1731 is added to read as follows:

§ 75.1731 Maintenance of belt conveyors and belt conveyor entries.

(a) Damaged rollers, or other damaged belt conveyor components, which pose a fire hazard must be immediately repaired or replaced. All other damaged rollers, or other damaged belt conveyor components, must be repaired or replaced.

(b) Conveyor belts must be properly aligned to prevent the moving belt from rubbing against the structure or components.

(c) Materials shall not be allowed in the belt conveyor entry where the material may contribute to a frictional heating hazard.

(d) Splicing of any approved conveyor belt must maintain flame-resistant properties of the belt.

[FR Doc. E8–30639 Filed 12–30–08; 8:45 am]

BILLING CODE 4510–43–P

Federal Register

Wednesday,
December 31, 2008

Part IV

Department of Homeland Security

Coast Guard

33 CFR Part 155

Salvage and Marine Firefighting Requirements; Vessel Response Plans for Oil; Final Rule

DEPARTMENT OF HOMELAND SECURITY

Coast Guard

33 CFR Part 155

[Docket No. USCG–1998–3417]

RIN 1625–AA19 (Formerly RIN 2115–AF60)

Salvage and Marine Firefighting Requirements; Vessel Response Plans for Oil

AGENCY: Coast Guard, DHS.

ACTION: Final rule.

SUMMARY: The Coast Guard is amending the vessel response plan salvage and marine firefighting requirements for tank vessels carrying oil. These revisions clarify the salvage and marine firefighting services that must be identified in vessel response plans and set new response time requirements for each of the required salvage and marine firefighting services. The changes ensure that the appropriate salvage and marine firefighting resources are identified and available for responding to incidents up to and including the worst case discharge scenario.

DATES: This final rule is effective January 30, 2009, except for the amendment to § 155.1050, which is effective February 12, 2009. The incorporation by reference of certain publications listed in the rule is approved by the Director of the Federal Register on January 30, 2009.

ADDRESSES: Comments and material received from the public, as well as documents mentioned in this preamble as being available in the docket, are part of docket USCG–1998–3417 and are available for inspection or copying at the Docket Management Facility (M–30), U.S. Department of Transportation, West Building Ground Floor, Room W12–140, 1200 New Jersey Avenue, SE., Washington, DC 20590, between 9 a.m. and 5 p.m., Monday through Friday, except Federal holidays. You may also find this docket on the Internet at *http://www.regulations.gov*, selecting the Advanced Docket Search option on the right side of the screen, inserting USCG–1998–3417 in the Docket ID box, pressing Enter, and then clicking on the item in the Docket ID column.

FOR FURTHER INFORMATION CONTACT: If you have questions on this rule, or for questions regarding the Vessel Response Plan Program, contact Lieutenant Commander Ryan Allain at 202–372–1226 or *Ryan.D.Allain@uscg.mil.* If you have questions on viewing the docket, call Ms. Renee V. Wright, Program Manager, Docket Operations, telephone 202–366–9826.

SUPPLEMENTARY INFORMATION:

Table of Contents

I. Abbreviations
II. Regulatory History
III. Background and Purpose
IV. Summary of Changes from NPRM
V. Discussion of Comments and Changes
A. Introduction
B. General
C. Twenty-four-hour response time
D. Need for the regulation
E. Applicability
F. Incorporation by reference
G. Compliance dates
H. Definitions
I. Response times
1. General
2. Timeframe too short
3. Timeframe too long
4. Planning or performance standards
J. Use of resource providers during actual incident
K. Required services
1. Salvage
2. Firefighting
3. Other
L. Funding agreements
M. Considerations for choosing resource providers
1. General
2. Coast Guard or third-party vetting
3. Use of public resources
N. Integration of the VRP into the Unified Command System/ICS
O. Worker health and safety
P. Waiver provisions
Q. Economic comments
R. Environment comments
S. Tribal Consultation
T. Miscellaneous
U. Beyond the scope
VI. Incorporation by Reference
VII. Regulatory Analyses
A. Regulatory Planning and Review (E.O. 12866)
B. Small Entities
C. Assistance for Small Entities
D. Collection of Information
E. Federalism (E.O. 13132)
F. Unfunded Mandates Reform Act
G. Taking of Private Property
H. Civil Justice Reform
I. Protection of Children
J. Indian Tribal Governments
K. Energy Effects
L. Technical Standards
M. Environment

I. Abbreviations

Abbreviations	Explanation
ACP	Area Contingency Plan.
ANSI	American National Standards Institute.
ASTM	American Society for Testing and Materials.
BOA	Basic Ordering Agreement.
CONUS	Continental United States.
COTP	Captain of the Port.
EA	Environmental Assessment.
FONSI	Finding of No Significant Impact.
FOSC	Federal On-Scene Coordinator.
FWPCA	Federal Water Pollution Control Act.
ICS	Incident Command System.
IMO	International Maritime Organization.
LOI	Letter of Intent.
MARAD	Maritime Administration.
MFSA	Maritime Fire and Safety Association.
NARA	National Archives and Records Administration.
NEPA	National Environmental Policy Act.
NFPA	National Fire Protection Association.
NIMS	National Incident Management System.
NPRM	Notice of Proposed Rulemaking.
NPV	Net Present Value.
NTTAA	National Technology Transfer and Advancement Act.
NVIC	Navigation and Vessel Inspection Circular.
OCIMF	Oil Companies International Marine Forum.
OCONUS	Outside the Continental United States.
OPA 90	Oil Pollution Act of 1990.
OSHA	Occupational Safety and Health Administration.
OSRO	Oil Spill Removal Organization.
P&I	Protection and Indemnity.
PRA	Programmatic Regulatory Assessment.
QI	Qualified Individual.
SERT	Salvage Engineering Response Team.
SOLAS	International Convention for the Safety of Life at Sea, 1974.
STCW	International Convention on Standards of Training, Certification and Watchkeeping, 1978.
UCS	Unified Command System.
VRP	Vessel Response Plan.
VTS	Vessel Traffic Service.

II. Regulatory History

On June 24, 1997, a notice of meeting was published in the **Federal Register** (62 FR 34105) announcing a workshop to solicit comments from the public on potential changes to the salvage and marine firefighting requirements found in 33 CFR part 155.

The public workshop was held on August 5, 1997, to address issues related to salvage and marine firefighting response capabilities, including the 24-hour response time requirement, found at 33 CFR 155.1050(k), which was then scheduled to become effective on February 18, 1998. The participants uniformly identified the following three issues that they felt the Coast Guard needed to address:

(1) Defining the salvage and marine firefighting capability that is necessary for the plans;

(2) Establishing how quickly these resources must be on scene; and

(3) Determining what constitutes adequate salvage and marine firefighting resources.

A copy of the summary report generated from this meeting is included in the project docket where indicated under **ADDRESSES**.

Based on comments received during the workshop, the Coast Guard determined that it should better define the key elements within the requirements. Regulatory language such as ''a salvage company with expertise and equipment'' or ''firefighting capability'' needed to be further specified before the Coast Guard could expect vessel owners or operators to comply with any related time requirements. Therefore, the Coast Guard determined that it should suspend the 24-hour response time requirement that stated: ''identified salvage and firefighting resources must be capable of being deployed to the port nearest to the area in which the vessel operates within 24 hours of notification'' for plans that are submitted (or resubmitted) for approval after that time. (33 CFR 155.1050(k))

On February 12, 1998, a notice of suspension was published in the **Federal Register** suspending the 24-hour requirement scheduled to become effective on February 18, 1998, until February 12, 2001 (63 FR 7069) so that the Coast Guard could address issues identified at the public workshop through a rulemaking that would revise the existing salvage and marine firefighting requirements.

On January 17, 2001, a second notice of suspension was published in the **Federal Register** suspending the 24-hour requirement scheduled to become effective on February 12, 2001, until February 12, 2004 (63 FR 7069) because the potential impact on small businesses from this new rulemaking required the preparation of an initial regulatory flexibility analysis under the Small Business Regulatory Enforcement Fairness Act of 1996. This was not determined until a draft regulatory assessment was completed in November 2000.

On May 10, 2002, the Coast Guard published a notice of proposed rulemaking (NPRM) entitled Salvage and Marine Firefighting Requirements; Vessel Response Plans for Oil [USCG–1998–3417] in the **Federal Register** (67 FR 31868). The 90-day comment period was to close on August 8, 2002. We received 104 letters commenting on the proposed rule. The majority of these letters contained multiple comments.

During the comment period, we held four public meetings. On June 12, 2002, a notice of public meetings was published in the **Federal Register** (67 FR 40254) announcing the dates and location for the first three public meetings:

- Texas City, TX, on July 9, 2002;
- Philadelphia, PA, on July 17, 2002;
- Seattle, WA, on July 25, 2002.

On August 7, 2002, a notice was published in the **Federal Register** (67 FR 51159) announcing the extension of the comment period until October 18, 2002, and the date and location for a 4th public meeting:

- Louisville, KY, on September 26, 2002.

On January 23, 2004, a third notice of suspension was published in the **Federal Register**, continuing the 24-hour requirement suspension until February 12, 2007 (69 FR 3236) because during the preceding three years, the Coast Guard had to redirect the majority of its regulatory resources to issue security-related regulations as required by the Maritime Transportation Security Act of 2002. As a result, we were unable to complete our review of the comments we received in response to the May 10, 2002 NPRM. Once NPRM comment review was done, we found that numerous public comments addressed environmental issues and we agreed that these comments had merit. As a result, a new Programmatic Environmental Assessment (PEA) was drafted, solely for these salvage and marine firefighting revisions, to address these comments.

On January 3, 2006, a notice was published in the **Federal Register** (71 FR 125) requesting comment on a draft PEA.

On February 9, 2007, a fourth notice of suspension was published in the **Federal Register** (72 FR 6168) continuing the 24-hour requirement suspension until February 12, 2009, to permit the Coast Guard to complete its work on the regulatory and environmental assessments.

III. Background and Purpose

Requirements for salvage and marine firefighting resources in vessel response plans (VRPs) for vessels carrying group I–IV oils have been in place since February 5, 1993 (58 FR 7376). The existing requirements found at 33 CFR 155.1050 are general and only require that a planholder identify salvage and marine firefighting resources. Additionally, they require that these resources are capable of being deployed to the port nearest the area in which the vessel operates within 24 hours of notification by the planholder of an oil spill. The Coast Guard did not originally develop specific requirements because salvage and marine firefighting response resource requirements were considered unique for each vessel. The Coast Guard's intent was to rely on the planholders to prudently identify contractor resources to meet their needs. The Coast Guard expected that the significant benefits of a quick and effective salvage and marine firefighting response would be sufficient incentive for industry to develop salvage and marine firefighting capabilities, similar to the development of oil spill removal organizations that was seen in the early 1990s.

Early in 1997, it became apparent that the expected salvage and marine firefighting capability development was not occurring. There was disagreement among planholders, salvage and marine firefighting contractors, maritime associations, public agencies, and other stakeholders as to what constituted adequate salvage and marine firefighting resources. There was also concern over whether these resources could be deployed to the port nearest the vessel's operating area within 24 hours, even though the maritime industry had several years to develop these resources. Thus, this salvage and marine firefighting rulemaking was initiated.

IV. Summary of Changes From NPRM

Each change made between the NPRM and the final rule is summarized and described below. The vast majority of changes were made in response to public comment and are discussed in more detail in the ''Discussion of Comments and Changes'' section of this preamble.

- We revised the *incorporation by reference* section (§ 155.140) by referencing the most recently available NFPA Standard or Guide for each of the four NFPA documents listed in the NPRM. Additionally, based on public comment, we added a fifth NFPA Standard (1005) to the list of documents incorporated by reference.
- We revised the *Purpose of this subpart* section (§ 155.4010) to address public comment by adding a new paragraph (b) to clarify that the response criteria specified in the regulations are planning criteria, not performance standards, and are based on assumptions that may not exist during an actual incident, as stated in 33 CFR 155.1010.
- We revised the *Who must follow this subpart?* section (§ 155.4015) to read ''You must follow this subpart if your vessel carries group I–IV oils, and

is required by § 155.1015 to have a vessel response plan.'' to address public comment requests for clarity.

• We revised the *When must my plan comply with this subpart?* section (§ 155.4020) to address public comment requests to change the compliance date from 6 months to 18 months after publication of the final rule.

• We revised the *definitions* section (§ 155.4025) to address public comment by adding additional language to eight definitions: ''Assessment of structural stability''; ''Contract or other approved means''; ''Funding agreements''; ''Marine firefighting''; ''On-site fire assessment''; ''On-site salvage assessment''; ''Remote assessment and consultation''; and ''Resource provider''. Additionally, we added four new definitions for ''Boundary lines''; ''Captain of the Port (COTP) city''; ''Marine firefighting pre-fire plan''; and ''Primary resource provider''.

• We revised the *required pre-incident information and arrangements for the salvage and marine firefighting resource providers listed in response plans* section (§ 155.4035) by deleting the referenced cite § 155.1045(c) from the text in § 155.4035(a). Section 155.1045 applies to ''Response plan requirements for vessels carrying oil as a secondary cargo'' and does not require a salvage and marine firefighting component.

• We changed the *section titles* (§ 155.4010 to § 155.4055) from the question format to a declarative statement format.

• We revised the *Specialized Salvage Operations* response timeframe requirement (Table 155.4030(b)(1)(iii)(C)) for ''heavy lift'' service from 72/84 hours to a response time of ''estimated.'' Based on public comment, we determined that heavy lift services are not required to have definite hours for a response time. The planholder must still contract for heavy lift services, provide a description of the heavy lift response and an estimated response time when these services are required; however, none of the timeframes listed in the table in § 155.4030(b) will apply to these services.

• We corrected the *Integration into the response organization* paragraph (§ 155.4030(c)) by listing the appropriate cross reference cites §§ 155.1035(d), 155.1040(d) and 155.1045(d).

• We revised the *Coordination with other response resource providers, response organizations and OSROs* paragraph (§ 155.4030(d)) by adding text requiring that the information contained in the response plan must be consistent with applicable Area Contingency Plans (ACPs) and the National Oil and Hazardous Substances Pollution Contingency Plan as found in § 155.1030(h).

• We revised the *Ensuring firefighting equipment is compatible with your vessel* paragraph (§ 155.4030(g)) to address public comment by adding text requiring a 20-minute minimum time criteria for the extinguishing agent.

• We added a new *Other resource provider considerations* section (§ 155.4032) to address public comment that includes language in paragraph (a) regarding the use of service providers not listed in the plan.

• We moved the *Worker health and safety* section (old § 155.4030(i)) to § 155.4032(b) and added reference cites.

• We revised the *Required pre-incident information and arrangements for the salvage and marine firefighting resource providers listed in response plans* section (§ 155.4035) to address public comment by adding text to paragraph (b)(1) indicating that if the planholder's vessel pre-fire plan is one that meets international standards, a copy of that specific fire plan must also be given to the resource provider. Additionally, we added a new paragraph (b)(3) regarding who must receive copies of the planholder's vessel pre-fire plan.

• We revised the *Response Time End Points* requirements (Table 155.4040(c)) to address public comment for ''heavy lift'' service from ''resources on scene'' to ''estimated,'' to align with the response timeframe requirement in Table 155.4030(b)(1)(iii)(C).

• We revised the *Ensuring that the salvage and marine firefighters are adequate* section (§ 155.4050) to address public comment by revising introductory language in paragraph (b) to emphasize the importance of the selection criteria, amending paragraph (b)(6) with updated NFPA Guide/Standards, revised paragraph (b)(13) to include ''in arduous sea states and conditions'' to ensure that all expected weather conditions are addressed when selecting a resource provider for contract, adding paragraph (b)(14) on worker health and safety, and adding paragraph (b)(15) regarding a resource provider having familiarity with the marine firefighting and salvage operations contained in the local Area Contingency Plans for each COTP area for which they are being contracted.

• We added a *Drills and exercises* section (§ 155.4052) to highlight that Salvage and Marine firefighting components are part of the existing exercise requirements for vessels holding VRPs, as found in §§ 155.1060 and 155.1065.

V. Discussion of Comments and Changes

A. Introduction

We received 104 letters commenting on the proposed rule. The majority of these letters contained multiple comments. During the comment period, we held four public meetings—

• Texas City, TX, on July 9, 2002;
• Philadelphia, PA, on July 17, 2002;
• Seattle, WA, on July 25, 2002; and
• Louisville, KY, on September 26, 2002.

The following is a summary of the comments received, both by letter and at the public meetings, and the changes made to the regulatory text since the NPRM was published. The items that address a general issue are grouped first, then by those that relate to a specific topic or provision in the regulatory text.

B. General

In support of the proposed rule, seven comments were received that generally supported the rulemaking. One commenter stated that both salvage and firefighting responses are significantly improved by timely reaction at the very early stages of an emergency. Three commenters pointed out that some ports have limited capability to conduct marine firefighting, and that the increase in capability these regulations would bring is especially important in the current port security climate due to possible acts of terrorism. One commenter stated that the current U.S. salvage structure, if not given the support of a regulatory framework, such as these regulations, will fail in the long term. One commenter stated the rule will reduce confusion by helping ship owners understand what salvage services are truly required to be listed in their vessel response plans (VRPs).

In opposition to the proposed rule, we also received several comments that disagreed generally. Twelve commenters stated that this rulemaking amounted to bad public policy. The Coast Guard disagrees and maintains that the regulation provides an appropriate level of needed salvage and marine firefighting capability to mitigate or reduce pollution in the marine environment.

One commenter asked the Coast Guard to make substantial revisions to any proposed salvage and firefighting requirements it may impose. The Coast Guard acknowledges this request, but as the comment included no specific changes the commenter would find acceptable, the Coast Guard did not make changes in response to this comment. Where changes have been

made based on other comments, they are explained throughout this preamble.

One commenter stated that there is no reason to tie vessel salvage to pollution response. The Coast Guard disagrees in part. This rulemaking is based on steps that are necessary to mitigate the release of oil into the marine environment, thus avoiding the need for pollution response. One way to reduce the need for pollution response is to ensure proper salvage procedures can be followed by ensuring (through contract) that service providers will be place in the wake of a marine casualty. In other words, this is a proactive rulemaking.

One commenter expressed the deep concern of the tank vessel industry over the direction the Coast Guard took in the NPRM, and urged the Coast Guard to give this issue special attention and ensure that the final result meets the tests of value-added, cost-effective, and common-sense rulemaking. The Coast Guard developed the NPRM and this final rule after considering numerous statutes and executive orders related to rulemaking. At the time of the NPRM, the Coast Guard did consider common-sence rulemaking practice and assessed the cost-effectiveness of the requirements using reasonable interpretation of available industry and spill data. We have also provided a similar assessment for the final rule. Assessments for the NPRM and this final rule are available in the docket as indicated under **ADDRESSES**.

Ten commenters suggest that the Coast Guard and the tank vessel industry get together and discuss the proposed rule in order to come up with livable alternatives. The Coast Guard agrees with the intent of this comment. After publication of the NPRM, the Coast Guard held four public meetings, and accepted public comments to ensure that all parties had the opportunity to comment on the NPRM. We considered all comments received, and this final rule is a result of that effort.

One commenter stated that while the Coast Guard can meet with whomever it wants, the very carefully worded description of the meeting in the proposed rule sounded very much like the meetings should have been open to the public. The commenter added that the ''Purpose'' section lacks any indication that the Coast Guard actively sought out the views of owners and operators, noting that additional consultation with the affected planholders prior to publication of the NPRM would have produced a sounder proposal and, most likely, a shorter regulatory process. The Coast Guard disagrees, and points to the August 5, 1997, public workshop that was held to formulate the basis for the NPRM. That workshop was structured to identify major issues concerning salvage and marine firefighting in the VRP context. To accomplish this, the 35 workshop attendees, invited from a cross section of the affected industries, were asked to list their top three issues concerning marine salvage and firefighting on an informal workshop survey form. A Coast Guard officer and a maritime law attorney, representing the Maritime Association of the Ports of New York and New Jersey, facilitated the workshop. The Coast Guard announced this workshop in the **Federal Register** on June 24, 1997, and invited all interested parties, including planholders, to participate. In addition, four public meetings were held after issuance of the NPRM, and a lengthy public comment period was used to ensure all interested parties had a chance to contribute to the process of issuing a final rule.

One commenter considered it inaccurate for the Coast Guard to describe the workshop (referenced above) as reflecting a ''uniform'' industry request to the Coast Guard to promulgate detailed performance, instead of planning, standards governing salvage operations. The Coast Guard disagrees that the workshop addressed performance standards; it did not. We were unable to locate the point in the NPRM where the Coast Guard made a statement such as that suggested by the comment. The response criteria specified in the regulations (e.g., quantities of response resources and their arrival times) are planning criteria, not performance standards, and are based on assumptions that may not exist during an actual incident, as stated in 33 CFR 155.1010. Failure to meet specified criteria during an actual spill response does not necessarily mean that the planning requirements of the Federal Water Pollution Control Act (FWPCA), OPA 90 and regulations were not met. The Coast Guard will exercise its enforcement discretion in light of all facts and circumstances. Nothing in this rulemaking introduces performance standards.

One commenter stated that any discussion of government action designed to create additional salvage and marine firefighting capacity in the United States must include some analysis of the factors that affect the current capabilities of salvors. The Coast Guard agrees in part. In addition to including salvage representatives in the public workshop and asking salvage industry leaders to complete workshop surveys regarding their capabilities, we had in-depth discussions with salvage and marine firefighting industry leaders over various periods regarding the current salvage and marine firefighting capabilities and what would be the anticipated increase in salvage re-capitalization once the final rule was issued. This rule is intended to increase resource providers' capabilities to the level necessary to handle emergency incidents prior to deterioration into worst case discharge scenarios; it will also increase the response capabilities necessary to keep ports and waterways open in a worst case discharge scenario, which might include a national security incident. The current capabilities, and factors that have or have not produced those capabilities, were sufficiently studied.

One commenter strongly urged the Coast Guard to use the tools that it has created and employ its superior understanding of the maritime system to make informed, well-reasoned, and risk-based decisions in the context of this rule. We thank the commenter, and have determined that the extensive groundwork done in conceiving and drafting this regulation has led to a fair, beneficial, and effective regulation.

Two commenters suggested a ''placing the right people in the right place at the right time'' approach instead of a new regulation. They noted this will allow plans to develop quickly and allow ship owners to take advantage of the best available assets as quickly as possible. The Coast Guard disagrees. This type of approach has had the opportunity to develop without new regulations ever since the Oil Pollution Act of 1990 (OPA 90) (Pub. L. 101–380, 33 U.S.C. 2701 *et seq.*; 104 Stat. 484) was enacted. However, based upon resource providers' past performance from 1990 to 2002, it is unlikely that such an approach has been, or would be successful. Therefore, this regulation is necessary to ensure resources are available when needed. However, this regulation allows for deviations from the VRP if required and approved by the Federal On-Scene Coordinator (FOSC).

C. Twenty-Four-Hour Response Time

One commenter stated that the Coast Guard should permanently revoke the 24-hour response time currently provided for in 33 CFR 155.1050(k)(3), which has been suspended since February 12, 1998. Five commenters stated that the 24-hour response times are wholly unacceptable and inadequate for marine firefighting. The Coast Guard agrees with the commenters and we removed the 24-hour response time requirement in this final rule.

One commenter asked the Coast Guard to withdraw this proposed rule and permanently revoke the 24-hour response time currently provided for in 33 CFR 155.1050(k)(3), which is under temporary suspension. The Coast Guard disagrees; such an action would remove all planning standards for salvage and firefighting from the regulation. The planning standard timeframes included in this final rule were determined to be realistic standards for planholders and resource providers to use in developing their contractual arrangements, and the timeframes will ensure a proper response will be available to avoid a worst case discharge scenario.

One commenter stated that they understood the Coast Guard was concerned about a lack of specificity in the suspended 33 CFR 155.1050(k)(3), which requires 24-hour response times for an emergency incident. However, the commenter argued that the NPRM's identification of the expertise a planholder should be prepared to have on scene largely resolves that issue. The commenter added that, with the exception of heavy lift and sub-surface product removal, the salvage capabilities could fall within the 24-hour requirement. The Coast Guard disagrees. The required timeframes for salvage are reasonable and necessary to ensure any incident emergency resource provider is contracted for and able to arrive on scene at the earliest possible opportunity. These timeframe requirements will improve the chances that the vessel crew, planholders, and resource providers will keep an incident from deteriorating into a worst case discharge over the initial 24 hours.

D. Need for the Regulation

Six commenters stated that the existing regulations satisfy the need for salvage and firefighting resources. They stated there is no casualty evidence to indicate that the present regulations fail to satisfy the need for timely salvage and/or firefighting resources, and that these regulations are unjustified and demonstrably unfair to the entire tanker industry serving the United States. One commenter stated that they felt that the Coast Guard's regulatory assessment, as written in the NPRM, will only have a five-percent impact over current performance measures. The Coast Guard disagrees. The requirements within this regulation are reasonable and valid for ensuring the identification and availability of response capabilities for responding to incidents up to and including a worst case scenario as required by OPA 90. The amount of oil spilled in past years, while an important factor in developing these regulations, was not the overriding reason for this rulemaking. Rather, consistent with OPA 90, the overriding reason for this rulemaking is to define the salvage and marine firefighting capability that is necessary in the VRP (Table 155.4030(b)), establish how quickly these resources must be on-scene, and determine what constitutes adequate salvage and marine firefighting resources as found in § 155.4050.

Two commenters stated that there were no obvious instances where the timeliness or lack of salvage or firefighting capabilities reduced the effectiveness or the outcome of an oil spill response, and they recommended delaying action on the rule until they have had an opportunity to assess whether tank vessel casualty history warrants a change in the current tank vessel salvage and marine firefighting requirements. The Coast Guard understands the issues raised by these commenters, but this regulation is written to ensure response capabilities are identified and available for responding to incidents up to and including a worst case discharge scenario as specifically required in OPA 90:

> Section 4202 * * * (5) TANK VESSEL AND FACILITY RESPONSE PLANS., (A) The President shall issue regulations which require an owner or operator of a tank vessel or facility described in subparagraph (B) to prepare and submit to the President a plan for responding, to the maximum extent practicable, to a worst case discharge, and to a substantial threat of such a discharge, of oil or a hazardous substance. [See 33 U.S.C. 1321(j)(5)]

In essence, while the number of incidents and amount of oil spilled into the water has decreased over the years since OPA 90 was enacted, the law still requires identifying and employing prevention methods for a worst case discharge scenario.

One commenter stated that if one takes the National Research Council's 1994 Marine Board Report, ''A Reassessment of the Marine Salvage Posture of the United States'' in its entirety, it provides ample evidence for not implementing this rule. The Coast Guard disagrees. The information presented in the report could be used to both support and counter arguments for this regulation. The Coast Guard considers the requirements in this regulation reasonable and valid for ensuring response capabilities are identified and available to respond to incidents up to and including a worst case discharge scenario, as required by OPA 90. While this report was taken into consideration, numerous other sources including workshops, research, public meetings, and consultations with various representatives of industry were used to formulate this rulemaking.

One commenter stated that the Marine Board's Committee on Marine Salvage Issues (cited above), particularly its assessment of the salvage industry, appears to have been a principal motivating factor behind the NPRM. Two commenters stated that the Marine Board Report was heavily relied on by the drafters of this rule. The Coast Guard disagrees. As stated above, this report was taken into consideration, as were numerous other sources, including workshops, research, public meetings, and consultations with various representatives of industry were used to formulate this rulemaking.

Three commenters expressed concern that the Coast Guard is forging ahead without having gathered and thoroughly assessed all available relevant data. They also stated that either we missed some very crucial data, or our assumptions are seriously flawed. The Coast Guard disagrees. The data used to develop this regulation has come from extensive research, studies, a public workshop, review of published works, and numerous reference materials including National Fire Protection Association (NFPA) documents and salvage and marine firefighting case histories. In total, the Coast Guard has been studying this salvage and marine firefighting issue since 1992, long before the issuance of the NPRM. Since the NPRM was published, we have held four additional public meetings that were very well attended by members representing all sides of the issues under discussion. After the public comment period closed, we received and reviewed over 1,000 comments on the NPRM. This regulation meets the needs of the public and maritime industry.

One commenter stated that the present salvage capacities accurately reflect the need and scope of those services and a rule intended to sustain salvage capacity at a level above or different than that justified by casualty data and economics is costly and ill conceived. The Coast Guard disagrees. Section 4202(a) of OPA 90 and amended § 311(j) of the FWPCA (33 U.S.C. 1251–1376) outline the requirement to prepare and submit a written response plan for a worst case discharge scenario of oil, and this regulation was designed to satisfy those requirements. While this regulation might have the effect of sustaining or raising the level of salvage and marine firefighting resources in place, it was not written for, or intended to, have that effect beyond the statutory requirements.

One commenter noted that the Coast Guard has acknowledged that crew actions and salvage response efforts have resulted in substantial prevention of oil spillage, even in the most severe accidents. Another commenter stated that the highly prescriptive approach in the NPRM contradicts the tank vessel industry's improved incident record. The Coast Guard agrees that oil-spill volume has decreased significantly since the implementation of oil-spill regulations and innovative measures taken by the tank vessel industry to reduce spills. However, this regulation was written to fulfill OPA 90 requirements of adequate salvage and marine firefighting response capabilities for up to and including worst case discharge scenario incidents, including a discharge resulting from fire or explosion; it was not written in response to the amount of oil spilled in U.S. waters since 1990.

Two commenters stated that OPA 90 did not grant the Coast Guard authority in this area, and requested that the Coast Guard carefully review the Act and specify where the authority to promulgate the proposed revision is located. The commenters stated that the Coast Guard should not promulgate these regulations if it is lacking authority to take such action. The Coast Guard strongly disagrees that we have no authority to promulgate these regulations. The Coast Guard was delegated authority pursuant to Executive Order 11735, as outlined in the authorities section of the regulation. Executive Order 11735 states:

> The Secretary of the Department in which the Coast Guard is operating is hereby designated and empowered to exercise, without the approval, ratification, or other action of the President, the following: * * *
>
> (2) the authority of the President under subsection (j)(1)(C) of section 311 of the act, relating to the establishment of procedures, methods, and equipment and other requirements for equipment to prevent discharges of oil and hazardous substances from vessels and transportation-related onshore and offshore facilities, and to contain such discharges.

In addition, the requirements of § 4202(a) of OPA 90 and amended § 311(j) of FWPCA, outline the requirement to prepare and submit a written response plan for a worst case discharge of oil. *See* 33 U.S.C. 1321(j)(5). Part of such a worst case discharge scenario would include firefighting and salvage operations; therefore it is necessary, under the law, that the VRPs include these elements.

E. Applicability

One commenter stated that careful consideration should be given to bareboat-charter operators, because such owners should not have to pay for the negligence of individuals renting vessels under those types of agreements. The Coast Guard disagrees. Part 155 of 33 CFR requires that the ''owner or operator'' prepare and submit a VRP to the Coast Guard. The matter of who submits the VRP is a contractual agreement to be determined by the owner or operator—he or she is free to include preparation of this VRP as part of the terms of the bareboat charter. Additionally, in § 155.1020, the definition for ''contract or other approved means'' states, in part, that it is: ''a written contractual agreement between a vessel owner or operator and an oil spill removal organization'' and also defines ''operator'' as a:

> Person who is an owner, a demise charterer, or other contractor, who conducts the operation of, or who is responsible for the operation of a vessel.

It is not the Coast Guard's intent to dictate the exact contractual arrangement to meet the intent of this regulation, only to ensure the requirement is met to enhance safety.

One commenter stated that the applicability of 33 CFR 155.1015 should remain exactly as written, because the exemptions written into the subpart were done as part of a lengthy and open period of public discussion, and that any changes would circumvent the normal public discussion process. The Coast Guard agrees and has not revised the tank vessel response plan applicability section of § 155.1015.

One commenter stated that vessels, such as shale barges and liquid-mud barges, should not be part of the current proposed rulemaking. The Coast Guard agrees as these vessels, while required to have VRPs under the applicability regulations found in 33 CFR 155.1015 and 155.1045 as vessels carrying oil as a secondary cargo, are exempted by § 155.1045 to list a salvage and marine firefighting resource provider in the VRP.

Two commenters urged the Coast Guard to coordinate with the Canadian Coast Guard on this rulemaking. The Coast Guard agrees. There are, and will be, continuing efforts of coordination and cooperation between the U.S. and Canada on maritime issues of interest to both countries, and the vessel traffic service (VTS) agreement in the Juan de Fuca region will remain in place. Any vessels, regardless of their country of origin, are subject to this rulemaking when they fall under the applicability as found in 33 CFR 155.1015(a).

We received 65 comments criticizing the fact that this regulation was written to apply only to oil-carrying vessels. At the time this NPRM was issued, the Coast Guard did not have legislative authority to require VRPs for nontank vessels. In the Coast Guard and Maritime Transportation Act of 2004 (Pub. L. 108–293), Congress gave us the authority to do so by stating:

> The President shall also issue regulations which require an owner or operator of a nontank vessel to prepare and submit to the President a plan for responding, to the maximum extent practicable, to a worst case discharge, and to a substantial threat of such a discharge, of oil. (Section 701 of Pub. L. 108–293).

Since then, we have issued NVIC #01–05, Change One, ''Interim Guidance for the Development and Review of Response Plans for Nontank Vessels.'' This circular provides guidance to owners and operators of nontank vessels for preparing and submitting VRPs for responding to a discharge or threat of a discharge of oil from their vessels. A nontank vessel is defined as a self-propelled vessel of 400 gross tons or greater, other than a tank vessel, which carries oil of any kind as fuel for main propulsion and is a vessel of the United States or operates on the navigable waters of the United States. For more information, the applicable Coast Guard Navigation and Inspection Circular (NVIC) #01–05, Change One, ''Interim Guidance for the Development and Review of Response Plans for Nontank Vessels'' is available on the World Wide Web at *http://www.uscg.mil/hq/g-m/nvic/*.

F. Incorporation by Reference

One commenter stated that the standard found in the International Convention for the Safety of Life at Sea treaty (SOLAS), 1974, Chapter II–2, Regulation 16, should be required for § 155.4030(g). The Coast Guard disagrees. SOLAS chapter II–2, regulation 16 (2000 Amendments) addresses ''Fire Safety Operational Booklets'' and procedures for cargo tank purging. In the ''Fire Safety Booklet,'' section 16.2, there is no mention of types and amounts of extinguishing agents needed on board the vessel. The SOLAS regulation doesn't include extinguishing agent requirements essential to adequate planning for marine firefighting, therefore § 155.4030(g) remains unchanged in this final rule.

Three commenters stated that application rates for foam should at least be consistent with NFPA 11 and

11A or other recognized standards. The Coast Guard disagrees. Section 155.4030(g) was written to meet the quantity of foam requirements in the existing 46 CFR 34.20–5 and Coast Guard NVIC #6–72, ''Guide to Fixed Fire-Fighting Equipment Aboard Merchant Vessels''. These requirements are for the vessel's internal firefighting systems and external resource requirements should be compatible with the existing system capacities required on the vessels.

One commenter stated that the requirement to develop the fire plan in accordance with the NFPA standard is not practical and offers little benefit. They suggested that all vessels (SOLAS as well as non-SOLAS) be required to carry a SOLAS fire plan. The Coast Guard disagrees. Another commenter stated that if a vessel meets the guidelines of NFPA 1405 for a pre-fire plan by means of another document, such as a SOLAS fire plan, a requirement to attach it to the VRP is needed. The Coast Guard agrees that the NFPA pre-fire plan standards align with the SOLAS fire plan requirements to a degree that meets the intent of these regulations. We added wording to allow SOLAS vessels to use their SOLAS fire plans in lieu of a fire plan developed under NFPA 1405 to § 155.4035(b)(1).

Three commenters stated that NFPA is currently working on a Professional Qualification Standard for Marine Firefighters that should be noted as incorporated by reference when published, as it would eliminate the need to rewrite the regulation when it is promulgated. The Coast Guard agrees that the new qualification standard, issued in July of 2007, will be beneficial under § 155.4050, and it has been incorporated by reference into this regulation.

Five commenters stated that NFPA 1405 is a guide for marine firefighting training and not a standard. The Coast Guard agrees and has amended the wording in §§ 155.4035(b)(1) and 155.4050(b)(6) to reflect this. However, incorporating NFPA 1405 into the regulation is still considered essential by the Coast Guard.

One commenter asked that the following NFPA documents be adopted in the proposed rulemaking: NFPA 1001 (Fire Fighter Professional Qualifications), NFPA 1021 (Fire Officer Professional Qualifications), NFPA 1405 (Land-Based Fire Fighters Who Respond to Marine Vessel Fires), and NFPA 1561 (Emergency Services Incident Management System). The Coast Guard agrees. Those materials, which were proposed for incorporation by reference in the NPRM, are retained in the final rule, and the newly issued NFPA 1005 (Standard on Professional Qualifications for Marine Fire Fighting for Land-Based Fire Fighters) has also been incorporated by reference in §§ 155.4035 or 155.4050.

In addition, more information on the Incident Management System may be found by going to the Coast Guard's ''Homeport'' Web page, *http://homeport.uscg.mil/mycg/portal/ep/home.do*, and search for ''NIMS/ICS''.

Three commenters stated that firefighting personnel protective equipment should meet NFPA 1971, 1972, 1973, 1974, 1976, 1981, or a recognized equivalent. While standards for protective equipment are important, it is beyond the scope of this regulation to require using specific equipment in response operations. Therefore, the suggested standards were not incorporated.

In addition to the changes stated above, the Coast Guard is amending § 155.140 by incorporating by reference the most recent edition of each relevant NFPA document. Since marine firefighting is a dangerous and complex activity, this revision will help ensure that the most current methods and practices are employed for planning and responding to a marine fire.

G. Compliance Dates

Three commenters stated that if the regulations are enacted, planholders will be hard-pressed to identify and qualify resource providers, negotiate with resource providers, get contracts in place, prepare the various plans, and submit the VRP to the Coast Guard. The commenters added that the Coast Guard does not have the resources to review the VRPs in a timely manner. They suggested that, if the NPRM is not withdrawn, the Coast Guard should modify the regulation so that VRP elements are submitted in stages. They further suggested that planholders be permitted to submit completed VRPs with named resource providers with a letter of commitment only, no contract, and without regard to response times. The Coast Guard agrees in part and has amended § 155.4020 to extend the deadline for submitting the VRP to 18 months after publication of this final rule. The Coast Guard does not agree with having the planholders submit VRPs in stages or without contracts with resource providers in place. We determined that 18 months is adequate to have these required contractual arrangements in place. Additionally, the Coast Guard has already begun to take the influx of VRPs into consideration for internal staffing needs.

Three commenters did not feel that requiring some plan holders to list multiple providers for their entire area of operations is unreasonable and a reason to delay these regulations. The Coast Guard agrees because planholders will have 18 months from the date of issuance of this final rule to comply, which is an adequate time period for planholders to list all of their resource providers.

H. Definitions

One commenter stated that the proposed definition of ''contract or other approved means'' is unnecessary, inappropriate, and extremely confusing to planholders, and that the salvage and firefighting requirements are a part of the tank VRP regulations. They feel the existing definition of ''contract or other approved means'' (found in 33 CFR 155.1020) has worked well and should be applied throughout the regulations. The Coast Guard disagrees. The definition found in 33 CFR 155.1020 is written specifically, and has numerous references to, oil spill removal organizations. The definition in § 155.4025, written specifically for the salvage and marine firefighting portion of part 155, is sufficient and we have not made any changes to it. As noted below, however, the definition in § 155.4025 does not substantially differ from § 155.1020.

Two commenters stated that the proposed § 155.4025 creates a definition of ''contract or other approved means'', which is substantially different from the existing definition of this term in 33 CFR 155.1020. They noted that the creation of dual definitions and dual regulatory standards is bad rulemaking, particularly when the conflicting definitions are in the same set of regulations. They expressed a preference for the definition appearing in § 155.1020, stating that it has proven to be appropriate and effective. The Coast Guard agrees in part. While there are two separate definitions, the definition in § 155.4025 does not substantially differ from § 155.1020. Therefore, this definition suffices as written. We have, however, added text into the written definition to clarify that if the vessel owner or operator has personnel, equipment, and capabilities under their direct control, they need not contract for those items with a resource provider.

Ten commenters requested that we clearly define ''COTP city'', as the current use in the regulation is confusing and may not be effective for determining requirements. The Coast Guard agrees and has added a definition of ''COTP city'' in § 155.4025.

One commenter stated that the definition of ''emergency lightering'' should be included in § 155.1020. The commenter also suggested greater use of cross-referencing. The commenter references a subpart that is not covered by this rulemaking. However, the Coast Guard will keep this suggestion under advisement should rewriting the applicable subparts in a future rulemaking become necessary.

One commenter stated that the definition of ''emergency lightering'' should not include portable barges or shore-based portable tanks. The Coast Guard disagrees. These methods of emergency lightering are two of many different techniques that may be used in an emergency lightering response. The definition includes the phrase ''or other equipment that circumstances may dictate'' to allow the planholder and resource provider to use the best methods for each particular incident.

Three commenters recommended rewording the definition for ''external vessel firefighting systems,'' while giving no suggestions on how it should be defined. The definition as written is sufficient; therefore, no revision has been made.

One commenter stated that in the definition of ''external vessel firefighting system,'' airplanes and helicopters should be deleted because they are not applicable to shipboard firefighting. The Coast Guard disagrees. We feel air assets can be integral to shipboard-firefighting operations in delivery of needed firefighting supplies and equipment. However, these regulations do not require them to be provided. That is a decision left to the planholder and resource provider to address. Therefore, we did not revise the definition.

One commenter stated that the definition of ''funding agreement'' is not necessary. The Coast Guard disagrees; the definition is necessary to ensure resources are available and dispatched in a timely manner. This agreement must be part of the contract or other approved means that ensures response resources will support the vessel's VRP. While the funding agreement might not be part of the VRP, all such agreements that support a particular VRP must be reviewed by the USCG prior to approval.

One commenter suggested that the definition of ''marine firefighting'' be reworded to eliminate ''actual'' and ''potential'' from the text. The Coast Guard disagrees in part, recognizing that there might be scenarios where response to a potential fire (volatile oil spilled on deck but not yet ignited, for example) might differ from an actual fire event. However, we have removed the word ''danger'' from the definition for clarity and to match the wording in § 155.4035(b)(2).

Two commenters stated that there needs to be a definition for ''marine firefighting plan.'' They recommended that the VRP be consistent with the National Incident Management System (NIMS)/Incident Command System (ICS) incident plan content and formats. The Coast Guard believes the commenters meant the marine firefighting pre-fire plan as required by § 155.4035(b) and agrees. We have added the definition of a marine firefighting pre-fire plan into § 155.4025. The Coast Guard does not agree, however, that the VRP needs to be consistent with the NIMS/ICS incident plan. We determined that the Unified Command has the responsibility of drafting the incident plan during the actual incident dependent on actual circumstances, not on pre-incident planning.

One commenter asked that the terms ''marine firefighting team'', ''marine firefighting provider'', and ''marine firefighting training'' be better defined. However, the commenter did not explain why or how or provide any suggestions. As a result, the Coast Guard has determined that the definitions and references in the text, as written, suffice for this rulemaking.

One commenter recommends deleting the ''offshore area'' definition from subpart I, § 155.4025, because it is already included in subpart D, § 155.1020. The Coast Guard disagrees because readers of subpart I will find this definition more conveniently in that subpart than in a preceding one.

One commenter stated that the definition for ''on-site fire assessment'' requires a marine firefighting professional to also consider the vessel stability and structural integrity, and since vessel stability and, in particular, structural integrity is a separate profession from firefighting, it is unreasonable to expect a professional firefighter to have much knowledge of these subjects. The Coast Guard agrees and has amended the text in § 155.4025 to:

> Control and extinguish a marine fire in accordance with a vessel's stability and structural integrity assessment if necessary.

One commenter stated that the definition for ''other refloating methods'' should be deleted or redefined, because most refloating efforts will be assisted by the tide and the specific time requirements listed in Table 155.4030(b) are not really applicable. The Coast Guard disagrees and will retain the definition as written. The timeframe required in Table 155.4030(b) is for the salvage plan to be approved and for having the resources required for refloating on board, not a timeframe for the vessel to be refloated.

One commenter stated that § 155.4030(a) requires the identification of a ''primary resource provider'' for each Captain of the Port (COTP) zone in which the vessel operates, but that the term is not defined. The commenter recommended adding the word ''primary'' to the definition for ''resource providers'' or clearly defining the distinction between the ''primary resource provider'' and the ''resource provider''. The Coast Guard agrees and has clarified this issue by adding a definition for ''primary resource provider'' to § 155.4025.

Three commenters stated that the definition for ''remote assessment and consultation'' needs to be more specific on who can be contacted, as the current definition could be construed to include administrative or support personnel that would be unable to make effective determinations on the appropriate course of action and initiation of a response plan. The Coast Guard agrees and has amended the definition in § 155.4025 to read:

> The person contacted must be competent to consult on a determination of the appropriate course of action and initiation of a response plan.

One commenter pointed out that the definition of ''resource providers'' includes the phrase ''as long as they are able and willing to provide the service needed'' in the second sentence, and that it should be removed. The Coast Guard agrees in part and has amended the definition to refer to the limitations for public marine firefighters as listed in § 155.4045(d).

Seven commenters asked that the definition for ''resource provider'' be rewritten to include reference to the training and qualification criteria in § 155.4050. The Coast Guard agrees and has amended the definition.

One commenter considers the definition of ''salvage'' incorrect, because the National Academy of Science/Marine Board ''Reassessment of the Marine Salvage Posture of the United States'' (1994) defines salvage as:

> a commercial effort [that] traditionally has focused on the saving of property ships and cargo.

The commenter suggested that perhaps the definition should be for ''salvage services'' instead of ''salvage.'' The Coast Guard disagrees. In the book ''Modern Marine Salvage'' by William I. Milwee (1996, Cornell Maritime Press,

Inc.), which is authoritative and widely accepted in the industry, salvage is defined as:

> Saving property at risk at sea and reducing environmental damage, and that salvage is all the actions taken aboard and ashore to resolve a marine casualty and to save property at risk.

The definition as written reflects this and therefore no change has been made.

One commenter requested changing the existing definition of ''salvage'' in § 155.4025 to read:

> To assist a vessel who has suffered damage or is in danger of suffering damage to prevent or reduce loss.

For the reasons described above, the Coast Guard disagrees and will leave the definition as written.

I. Response Times

1. General

There were four comments asking what triggers the activation of the response plan. The response plan is activated once the master of the vessel has determined that the resources and personnel available on board cannot meet the needs of an actual or potential incident. The response timeframes listed in Table 155.4030(b) start when anyone in the response organization receives notification as stated in § 155.4040(b).

One commenter stated that the generic response times in the ''Table of salvage and marine firefighting services'' are not always appropriate to local situations, such as those on the west coast, Alaska, and Hawaii. They recommended the Coast Guard evaluate the entire U.S. coastline, including Alaska and Hawaii, to determine whether the offshore areas, as required by this rulemaking, provide adequate coverage. The Coast Guard agrees in part. Table 155.4030(b) was developed to target COTP cities that cover the major high-traffic ports outside the continental U.S. (OCONUS). Our analysis for the proposed rule showed that it would be cost prohibitive to cover all offshore areas for the OCONUS locations. All continental U.S. (CONUS) coastlines are covered by this final rule and this rule does not impose any additional capital requirements on industry. Table 155.4030(b) shows the timeframe requirements for CONUS and OCONUS response activity both within 12 miles of a COTP city, and from 12 to 50 miles of a COTP city.

One commenter recommended different planning response times for high-volume ports and non-high-volume ports similar to the spill response planning standards. The Coast Guard disagrees. This rulemaking was written to provide uniform response timeframes for all the shorelines and port cities of the U.S., emphasizing protection of vessels during underway transits where most salvage and/or marine firefighting incident response efforts would be needed. It differs from the abovementioned standards that were written to address the recovery of oil already released, which most often happens in or around port facilities during transfer operations at dockside in high-volume ports.

Two commenters questioned the justification for specifying whether particular equipment and expertise must be on scene in say, 12 hours, as opposed to 18 hours, given that every salvage operation is different depending on the circumstances of the casualty. The Coast Guard disagrees in part. We acknowledge that each incident will differ in circumstances, and that is why this rulemaking incorporates planning standards in lieu of performance standards. The timeframes were determined to be realistic standards for planholders and resource providers to meet when developing their contractual arrangements.

One commenter stated that the proposed regulations generally do a good job of identifying the services necessary, but there are significant sequencing and timing issues that compromise the proposed regulations to the point that compliance will be impossible. The Coast Guard disagrees because compliance with the planning standards as listed will be achievable, if not within the compliance date of this rulemaking, certainly within the waiver periods as outlined in § 155.4055(g).

One commenter stated that imposing strict response times will force a significant expansion of the resource base of dedicated professional salvors, and that as this resource base expands, it will not sit idle in warehouses or at dockside, but will enter the marketplace to compete for all available business to which it is suited. The Coast Guard neither agrees nor disagrees with this comment. We note, however, that what resource providers do with their resources when not responding to an incident is beyond the scope of this rulemaking.

2. Timeframe Too Short

Three commenters stated that the one-hour timeframe for remote assessment and consultation should be four hours. The Coast Guard disagrees. The criteria for remote assessment and consultation are that the salvor is in voice contact with the qualified individual, operator, or the master of the vessel. This qualified individual should plan to make voice contact via cell phone or radio within the one-hour response timeframe.

One commenter stated that placing the proposed time constraint of 16 hours on the salvage team to produce a written salvage plan is not necessary and may be counterproductive. The commenter feels that this time constraint, combined with factors such as the time of day the incident occurs and travel time, could unnecessarily result in poor decisions made as a result of being rushed or having insufficient time to gather information. The Coast Guard disagrees, but also reiterates that the timeframes listed in Table 155.4030(b) are planning standards and not performance standards. We understand that the first submittal of a salvage plan to the Incident Commander might not be the final plan after all factors are considered and that, as in any incident response, circumstances will dictate the development and execution of daily incident action plans. It is entirely feasible that with proper pre-planning and consultation between all parties involved, a suitable salvage plan can be developed in the published times.

Two commenters stated that the attempt to control the on-site salvage assessment, as found in Table 155.4030(b), and succeeding portions of the salvage effort by placing set time limits on the initiation of the various stages may be counterproductive to the overall effort. The commenters also asserted that the accuracy and timeliness of the ongoing assessments of structural integrity and stability will not be aided by having a set time limit imposed. The Coast Guard disagrees. It is imperative that the planholder have contractual arrangements in place to ensure a minimum level of salvage expertise, above that of the master and crew, will be on board the stricken vessel in a minimum amount of time. We understand that after this first response by the contracted salvor, a more specialized area of expertise may be needed and, if so, the planholder can arrange for such specialized expertise. The burden of providing capable salvor expertise in the required timeframe is on both the planholder and the resource provider. It is both parties' responsibility to jointly plan for and anticipate likely scenarios in which the salvor's services would be needed.

Two commenters stated that the proposed six-hour response timeframe (for incidents up to 12 miles from the COTP city) and the 12-hour response timeframe (for incidents up to 50 miles from the COTP city) for on-site firefighting assessment and fire-

suppression services presumably would apply in situations where local fire personnel are not available and the firefighting representatives must travel from the service provider's headquarters to the vessel. Under these circumstances, the commenters believe the proposed timeframes for this to take place are not reasonable or likely achievable. The Coast Guard disagrees. The timeframes listed for on-site fire assessment are achievable either by using local fire personnel or by contracting with resource providers that can meet the planning criteria. Should there not be a resource provider that can meet the criteria in that specific geographical area, § 155.4055 provides for a temporary waiver request to allow time to address those shortfalls.

One commenter stated that in operating areas where firefighting tugs may not be available, the ability to meet the proposed timeframe for ''External firefighting systems'', as found in Table 155.4030(b), will be limited by the amount of foam that can be stockpiled and the availability of nearby air cargo facilities. The Coast Guard disagrees in part. We understand that meeting the requirements will take a concerted effort by planholders and resource providers to ensure an adequate supply of foam is on hand, but it can be achieved within the timeframes listed. Resource providers and planholders will have to take a proactive stance in regards to ensuring adequate amounts of marine-firefighting extinguishing agents are available and should consult with port partners to ensure that appropriate firefighting responses will occur.

Two commenters stated that the timeframes for remote assessment and consultation, assessment of structural stability, external emergency transfer operations, and completing a salvage plan ignore numerous other demands, and that applying arbitrary time limits to inherently variable situations does not achieve the goal of the rulemaking. The Coast Guard disagrees. We have written Table 155.4040(c) specifically to allow flexibility for these services. For example, Table 155.4040(c) lists the ending for response time assessment of structural stability when the ''Initial analysis is complete.'' We understand and have taken into consideration that these services will be progressive. The specific response times are planning standards based on a set of assumptions made during the development of this regulation. We understand that these assumptions may not exist during an actual incident, but the use of these timeframes as planning standards is valid and will remain unchanged.

Two commenters stated that emergency lightering differs from an external transfer operation in that the cargo or bunkers are transferred to another vessel or to a land-based receiver (rather than to another location on the damaged vessel). The major component of offshore lightering, assuming that the portable pumps have arrived on scene, is the receiving vessel, and the use of that equipment must be guided by the approved salvage or lightering plan. The Coast Guard agrees in part, but as this comment was not specific in its opposition to the timeframe requirement the Coast Guard cannot respond further. However, we note that the requirement for emergency lightering, having the equipment on scene and alongside the stricken vessel (§ 155.4030(f)), is written such that it follows the requirement for a salvage plan by six hours specifically so that the emergency lightering can be accomplished in accordance with the salvage plan's direction.

Two commenters asserted that the assumption that re-floating methods such as pontoons or airbags could be assembled and delivered to the casualty in the proposed timeframe as found in Table 155.4030(b) is not reasonable as such an assumption makes no allowance for the planning and engineering effort that must accompany any prudent attempt to apply external buoyancy to a damaged vessel. The commenters argued that the capability to provide these types of services should be included in an assessment of a salvage service provider, but that having it mandated within a certain timeframe takes it out of the context of the salvage plan. The Coast Guard disagrees in part. The response time ends when the salvage plan is approved by the FOSC and the needed resources are on the vessel, not when an attempt is made to refloat the vessel. This allows for the discretion the commenter calls for when actually attempting to refloat the vessel.

Two commenters stated that there is no way of knowing prior to the incident what materials might be required to meet ''Making temporary repairs'' as found in Table 155.4030(b) and, therefore, it is not reasonable to impose a set timeframe for having the materials available. The capability to provide this service should be included in an assessment of a salvage service provider, but having it mandated within a certain timeframe takes it out of the context of the salvage plan. The Coast Guard disagrees in part. We determined that having repair equipment ready and deployed on board a vessel in an emergency incident is important enough to merit its own timeframe for response. We recognize that it is not possible to foresee every single material or tool that might be needed to make a temporary repair. However, we determined that a reasonableness standard can be applied to this provision, and it is absolutely possible to determine the materials and tools that are most likely to be needed for planning purposes.

Two commenters stated the response for ''Diving services support'' as found in Table 155.4030(b) may be a progressive operation with the initial dive team arriving with necessary initial gear augmented by truckloads of additional equipment such as underwater welding, larger compressors, and decompression chambers; therefore, some unique constraints are placed on the travel methods for the dive team. The Coast Guard agrees that dive operations can be a lengthy process. However, the response time ends when required support equipment and personnel are on scene in accordance with Table 155.4040(c)(1)(xii), and not when the diving support services operations start, so we have not amended the response time.

One commenter stated that getting the Salvage Master on-site is the key to the commencement and/or completion of many of the other services. The commenter stated it is possible to begin the on-site assessment, at the furthest extent of their operating area, if there were eight hours instead of six. The commenter recommends the requirement for this service be extended to at least eight hours. The Coast Guard agrees that getting the person conducting the salvage assessment on board is critical, hence our six- or 12-hour timeframe, depending on whether the incident occurs within 12 miles or 50 miles offshore. Due to the company-specific nature of this comment we are not expanding the planning standard in this rulemaking. We acknowledge that some geographic areas will have a harder time meeting certain timeframes than others, and that in cases where it is actually or nearly impossible to meet the timeframes, we will consider waivers as allowed in Table 155.4055(g).

3. Timeframe Too Long

Two commenters stated that it is unacceptable to leave large sections of coastline along the western coast of Washington State and the Strait of Juan de Fuca exposed, asserting that they are not covered by requirements for timed responses, and that the Federal Government has a responsibility to protect the treaty rights of Puget Sound tribes in their usual and accustomed fishing areas. The Coast Guard

disagrees. Sections 155.4030(b) and 155.4040 describe the geographical limits of vessel transits that the response activity timeframes apply to using the same geographical area descriptions as the original VRP regulation, found in 33 CFR 155.1050(k). Additionally, 46 CFR 7.5(c) reads:

> Except as otherwise described in this part, Boundary Lines are lines drawn following the general trend of the seaward, highwater shorelines and lines continuing the general trend of the seaward, highwater shorelines across entrances to small bays, inlets and rivers.

Therefore, all the coastal waters of the U.S. are covered under this rulemaking. Regarding specific response activity timeframes for the Strait of Juan De Fuca, it is unnecessary to change the timeframes for one area. Again, these timeframes are maximum planning standards and as such there will be resource providers that can bring resources to bear well within the published timeframes in the Strait of Juan de Fuca.

One commenter stated that the response times allotted for the emergency lightering resources in the NPRM are very generous and believes that more stringent response times for lightering resources would definitely be achievable. The Coast Guard disagrees; we feel the timeframe is appropriate for the need because these times must include the movement of both specialized equipment and the appropriate technical personnel. Therefore, the 18- and 24-hour timeframes for the resources to arrive on scene and alongside the vessel are suitable for this service.

One commenter stated that the time requirements in Table 155.4030(b)(1)(i)(E), specifically the line item calling for 12 hours for hull and bottom survey, are discouraging for two reasons: (1) A vessel on fire will need this analysis faster than 12 hours for effective firefighting response; and (2) the commenter has been providing the damage stability analysis within two hours for groundings, allisions, collisions, explosions, fires, and other structural failures. The Coast Guard agrees in part and understands the need for critical information to be available as soon as possible. The response activity timeframes are provided as a maximum planning limit. It is in the interest of the planholder to minimize response times for the salvage and firefighting requirements, and we anticipate the prudent planholder will work to ensure that they are minimized.

4. Planning or Performance Standards

One commenter stated that the description of services that the planholder must contract for in advance is excellent, but because each incident is different the planholder should be able to respond as appropriate instead of taking a ''by-the-numbers'' approach. The commenter was concerned that the Coast Guard will ''grade'' the response not on whether it was timely and appropriate, but by whether the planholder met the arbitrary timeframes proposed. The Coast Guard agrees that the response activity timeframes required by this subchapter should be used in developing the required VRPs. The specific response times are planning standards based on a set of assumptions made during the development of this regulation. These assumptions may not exist during an incident up to and including a worst case discharge scenario as required by OPA 90. Therefore, Table 155.4030(b) will be used as a planning standard and not a performance standard to ensure that the resources are capable of arriving at the vessel in the required response times when formulating the contract between the planholder and the resource providers.

Twenty-seven commenters asked the Coast Guard to continue emphasizing that the response-time criteria in the rule are a planning standard, not a performance standard. The Coast Guard agrees and has used § 155.1010 as a guideline in developing specific planning criteria. The response activity timeframes required by Table 155.4030(b) are intended for use in developing the required VRPs. The specific response times are planning standards based on a set of assumptions made during the development of this regulation. These assumptions may not exist during an incident up to and including a worst case discharge scenario as stated in OPA 90. Therefore, Table 155.4030(b) should be used as a planning standard and not a performance standard, to ensure that the resources are capable of reaching the vessel in the required response times, when formulating the contract between the planholder and the resource providers.

One commenter stated that the salvage and marine firefighting service response times are planning times in the same manner as oil spill removal organization (OSRO) equipment response times are planning times. The Coast Guard agrees. The planning criteria in this subpart are intended for use in response plan development and the identification of resources necessary to respond to the worst case discharge scenarios. The development of a response plan prepares the vessel owner or operator and the vessel's crew to respond to an emergency incident. The specific criteria for response resources and their arrival times are not performance standards. They are planning criteria based on a set of assumptions that may not exist during an actual incident.

J. Use of Resource Providers During Actual Incident

Twelve commenters expressed concern that the emphasis on contracts may set a precedent that would prohibit a company from using the best service available at the time instead of the contracted service. The Coast Guard disagrees in part. The purpose of requiring contracts is to ensure a timely response for an incident. Planholders may list multiple-contracted resource providers and choose which resource provider is best in a particular situation. While this regulation cannot eliminate the possibility that there may be closer, non-contracted resources, it ensures that prompt action can be taken immediately to dispatch needed resources to respond. While the preferred means of obtaining response resources is by pre-approved contracts, the Coast Guard recognizes that the planholder/FOSC/Unified Command must have flexibility under exceptional circumstances to deviate from the service provider(s) listed in the approved VRP. This deviation from the response plan must be conducted in accordance with the Jones Act (Title 46, United States Code Appendix 316(d)) unless a waiver is requested.

One commenter stated that the Coast Guard's interpretation of § 1144 of the Coast Guard Authorization Act of 1996, Public Law 104–324, is inappropriate, because the NPRM's version of FOSC authority to deviate from the VRP does not track the language of the FWPCA. The Coast Guard disagrees. Section 1144 of the Coast Guard Authorization Act of 1996 (Pub. L. 104–324), otherwise known as the ''Chaffee Amendment'' amended the FWPCA regarding the use of spill response plans. Specifically, it states:

> That the owner or operator may deviate from the applicable response plan if the President or the Federal On-Scene Coordinator determines that deviation from the response plan would provide for a more expeditious or effective response to the spill or mitigation of its environmental effects.

The Coast Guard interprets this amendment as applicable to the use of contracted resources, qualified individuals, and other ''significant''

deviations from the VRP. This deviation from the response plan must be conducted in accordance with the Jones Act (Title 46, United States Code Appendix 316(d)) unless a waiver is requested. The Coast Guard will give precedence to the Incident Action Plan as developed by a unified command during an actual response. Wording has been added in section § 155.4032(a) to cover this possibility.

One commenter urged the Coast Guard to encourage conformity with international practices and standards wherever possible and also encourage planholders to move quickly to engage the nearest best available assets. The Coast Guard agrees in part. Nothing in this regulation discourages planholders from conforming to international standards, and it has been a policy of the Coast Guard to encourage conformity with any international standards that are above the level of required federal regulations. As far as encouraging a planholder to engage the ''nearest best'' available assets, § 1144 of the Coast Guard Authorization Act of 1996 (Pub. L. 104–324; October 19, 1996; 110 STAT. 3901), otherwise known as the ''Chaffee Amendment'', provides the Incident Commander/COTP authorization to deviate from the VRP in instances where that would best effect a more successful response. This deviation from the response plan must be conducted in accordance with the Jones Act (Title 46, United States Code Appendix 316(d)) unless a waiver is requested.

One commenter stated that firefighting technology and resources are not in place. The Coast Guard agrees in part. We acknowledge that there are areas of the U.S. where adequate firefighting resources may not be available. This is part of the reason we are issuing this rule. In order to allow time for these resources to develop, we have included the ability to request a waiver for fire-suppression services for those planholders who are unable to contract for this service in the 18-month compliance period. However, we determined that remote firefighting assessment and consultation is easily achieved by external communications and, therefore, no waiver period is allowed for that service. We expect that this regulation will help the industry develop new firefighting resources and technologies.

One commenter stated that the Coast Guard should be realistic when they say a resource provider is capable of providing a service. A service provider is capable subject to the availability of its resources, and the Coast Guard ought to say so. The Coast Guard disagrees in part. The resource provider, by entering into a contractual agreement to provide the services necessary to meet the requirements of this regulation, has agreed to respond under the obligations identified in that contract. Due to extenuating circumstances, where local resources might be engaged in separate emergency response activities, the FOSC may determine that a deviation from the response plan would provide for a more expeditious or effective response.

K. Required Services

1. Salvage

One commenter stated that there is no need to provide the information in § 155.1035(c):

> Shipboard spill mitigation procedures for manned vessels carrying oil as a primary cargo,

or § 155.1040(c):

> Shipboard spill mitigation procedures for unmanned tank barges carrying oil as a primary cargo,

in advance of an incident, because the information can always be sent via fax or e-mail and arrive well before the salvage professional arrives on scene, adding that even if it was sent in advance, the odds are the salvage professional would ask for it again to ensure they have the latest copy. The Coast Guard disagrees. This information is a valuable asset for resource providers and must be available to them at all times. We don't consider this an additional burden as this information must already be included in a VRP. Maintaining current information as required by §§ 155.1035(c) and 155.1040(c) is an issue to be resolved between the vessel owner/operator and the resource provider.

One commenter stated that the NPRM does not adequately consider the diversity of situations lumped into the term ''salvage.'' The expertise and equipment that could be involved in a particular incident are as variable as the events themselves, therefore they feel that the rule is too prescriptive, and the placement of strict time requirements is counterproductive. The Coast Guard agrees in part. This regulation was written specifically to allow planholders and resource providers to determine those equipment and services for which they need to enter into a contract. We considered more prescriptive contractual requirements for specific salvage and marine-firefighting equipment and instead decided to allow the contractual partners flexibility to determine what was necessary to ensure effective incident response services are available to cover up to a worst case discharge scenario.

One commenter stated that the rule attempts to address components such as equipment and capability, training of experienced personnel, contracting options, effective communication and fair compensation but it does not, however, fully address any of them. The commenter elaborated that the elements remain largely untouched, and stated the rule does not go far enough in any area. The Coast Guard disagrees. The regulation was written in a non-prescriptive manner to allow both the planholders and resource providers to work together to provide the equipment and services necessary to meet the intent of the regulation under a contractual arrangement. A great deal of flexibility was allowed specifically to address the varying availability of response equipment and expertise in different geographical locations, and the types of transport services and operating environments.

One commenter stated that the response resources, which are created by this rulemaking, are unlike pollution response resources that have little or no practical uses outside of their design parameters. These new salvage resources, acquired and subsidized with lucrative retainer fees from the tanker industry, almost certainly will be used to compete for any and all additional maritime business for which they might be suited, and that this will be to the financial detriment of the many general marine contractors who currently provide many of the services and resources utilized for salvage operation. The Coast Guard disagrees in part. We recognize that response resources will be created by this regulation that will most probably be put to other uses when not in use per these regulations. However, the owner of these resources will be under contractual arrangement to ensure these services and equipment are available to respond in the required timeframes. It is also probable that local general marine contractors will be contracted for use of their services and equipment by the primary resource provider.

One commenter asked what constitutes a salvor today, particularly if it can no longer be viewed as a specialist in many key salvage-related activities. This question was asked in the context of the 1994 Marine Board report, which states:

> Even the professional salvor, once almost self contained, relies more and more on outside specialists for salvage engineering, firefighting, lightering, naval architecture and the provision of the salvage working platform itself. (Reassessment of the Marine Salvage

Posture of the United States, p. 36; Copyright 1994, available through the National Academy Press, 800–624–6242)

This final rule, while including dedicated salvors in the area of resource providers, does not limit the ability of anyone to enter into contractual agreements with the planholder. In fact, we recognize in § 155.4030(a) that multiple resource providers may be needed to meet the intent of these requirements. We recognize that it is unlikely any single salvage contractor would be able to perform all of the elements (services) of salvage and marine firefighting in every region of the United States. Thus, more than one contractor may be necessary to perform all the services needed. The planholder would be required to list each service and the resource provider to perform it, in their VRP's geographic-specific appendix for each COTP zone the vessel transits. The primary resource provider will act as the primary point of contact when multiple resource providers are listed for the same service.

One commenter disagreed with the definition of ''on-site salvage.'' They stated that the on-scene person does not need to be someone who has the ability to assess the vessel's stability and structural integrity. He or she needs to be someone who can assess the visual condition of the vessel and report the required information (phone or radio) to the person who will determine the vessel stability and structural integrity. The Coast Guard disagrees. To accurately assess the vessel's stability and structural integrity, and even to accurately report significant facts back to the resource provider conducting the stability calculation, the person on scene must have the training and experience to meet the requirements of § 155.4050. Determining how quickly resources must arrive and the expertise needed on-scene were discussed in detail during the 1997 public workshop (referenced earlier in this discussion) and in subsequent meetings with interested parties, therefore we feel that the six- and 12-hour timeframes are adequate for the resource provider's representative to arrive on-scene.

One commenter noted that many vessels have on board internal emergency transfer equipment and therefore should not have to contract for portable emergency-transfer equipment for lightering. The Coast Guard disagrees. While some ships have this equipment on board, it may not be capable of working in an emergency. Therefore, it is prudent to also have this equipment available by contract.

One commenter stated that the definition of ''diving services support'' and its position in Table 155.4030(b) is in error. They feel that it should be part of the ''Assessment & Survey'' section of Table 155.4030(b), and that divers should not enter the water without the support on scene. The Coast Guard disagrees regarding moving the diving services support into the ''Assessment & Survey'' section. We consider it unreasonable to expect diving services providers to meet the shorter timeframes as listed in the ''Assessment & Survey'' section of the table. We agree that divers should not enter the water without proper support, but point out that the diving services support listed in Table 155.4030(b) refers to diving services supporting the salvage operation, not support for the divers themselves. Section 155.4032(b) addresses implementing the safety support systems necessary when providing salvage and marine firefighting services.

One commenter stated that for emergency lightering of special cargoes, specialized lightering equipment may be needed and may take longer to arrive on scene than is required by this rulemaking. The Coast Guard understands that special circumstances could arise in any situation and has crafted the response timeframes as planning standards. Should circumstances arise that would delay emergency lightering equipment from arriving as planned for in the VRP, there are a number of alternatives. There is a provision in the Chaffee Amendment that allows the FOSC to deviate from the VRP if it would provide for a more expeditious or effective response to the incident or mitigation of its environmental effects. In addition, the requirements of the Jones Act:

> Prohibits the engagement of a foreign vessel in salvaging operations on the Atlantic or Pacific coast of the United States, or in territorial waters of the United States on the Gulf of Mexico, except when authorized by treaty or when the Commissioner of Customs, after investigation, authorizes the use of a foreign vessel or vessels in the salvaging operations. [Title 46, United States Code Appendix 316(d)],

Therefore, the FOSC may act to obtain a waiver when suitable U.S.-flag vessels or barges cannot be located or obligated to assist and support the removal and salvage operations to mitigate pollution or the threat of pollution. Every waiver request has to go to the Commissioner of Customs for authorization. The waiver may be granted, after the U.S. Maritime Administration (MARAD) has been consulted on the availability of U.S. vessels, on a case-by-case basis, to support removal/salvage operations to mitigate pollution or the threat of pollution. This on-scene, incident specific, FOSC request for a Jones Act waiver is a separate and different issue than the waiver discussed in § 155.4055(c). There, we explain that the emergency lightering requirements for the vessel response plan may not be waived due to a planholder being unable to contract a resource provider to be listed in the VRP.

One comment stated that the term ''special salvage operations'' may be misleading because every case is different, and there is currently no such entity as a ''special salvage operations plan,'' only the ''salvage plan.'' The Coast Guard disagrees. Salvage efforts may be divided into three areas: assessment and survey, stabilization, and special salvage operations (e.g., re-floating and post-refloating). For the purposes of this regulation, special salvage operations include heavy lift and/or subsurface product removal as detailed in Table 155.4030(b)(1)(iii).

One commenter suggested revising the ''heavy lift'' definition to identify a minimum-rated lift capacity, i.e., 100 short tons. The Coast Guard disagrees. Requirements for salvage capabilities let the planholder and resource providers decide, for each particular vessel, what sufficient ''heavy lift'' capabilities are. Again, the Coast Guard is writing these regulations to be planning based rather than prescriptive.

The same commenter also stated that heavy lift equipment is only useful for vessels of limited size, and that heavy lift is not useful for ship salvage, but could be used in the salvage of barges. The Coast Guard agrees in part. Heavy-lift capabilities are still required as stated in Table 155.4030(b). Heavy lift equipment is only useful for vessels of limited size, and not for the majority of tankers carrying oil. Because of this limited applicability and the major costs of capital construction associated with building heavy lift capabilities, it is economically and/or physically impractical to require these resources to be on scene in a given time period. Therefore, the Coast Guard revised the regulation in Table 155.4030(b) to allow the planholders to contract with existing resource providers where they are currently located, and provide an estimated time of arrival on scene for planning purposes.

Should a planholder not be able to contract a resource provider that can provide heavy lift capability for the area in which the vessel is operating, § 155.4055(g) offers a five-year waiver period for specialized salvage operations, of which heavy lift is part. In addition, should a planholder feel that contracting for heavy-lift capabilities is not feasible based on

special circumstances of their vessel(s), 33 CFR 155.130(a)(2)(i) allows for a planholder to request the Coast Guard to grant an exemption from the regulation when compliance with a specific requirement is economically or physically impractical.

One commenter recommended listing the resources and requirements for emergency lightering and/or external emergency-transfer operations under a separate heading in the NPRM. The Coast Guard disagrees and has written Table 155.4030(b) to reflect a logical progression during an emerging salvage operation.

One commenter asked if the required salvage and marine firefighting services will be listed in a geographic-specific appendix for each COTP zone. If so, the commenter stated that the existing regulations should be updated to reflect this change, and be listed as set forth in §§ 155.1035(i)(9) and 155.1040(j)(9), which state:

> The appendix must also separately list the companies identified to provide the salvage, vessel firefighting, lightering, and, if applicable, dispersant capabilities required in this subpart.

As these sections already require these specific services to be listed, §§ 155.1035(i)(9) and 155.1040(j)(9) will not be updated. Resource providers that will be contracted for services in an area must be listed in the VRP geographical-specific appendix as found in §§ 155.1035(i)(9) and 155.1040(j)(9). Additional resources may be listed, but if they are not under a contract or other approved means for response they must be clearly listed as an additional resource and not as a primary or secondary responder.

Two commenters stated that if additional equipment is needed to support operations or to transport firefighting resources to a vessel away from a pier, then these resources should be identified in the VRP. The Coast Guard agrees in part. This regulation outlines what services are required to be planned for in accordance with the response activity timeframes listed in Table 155.4030(b). If additional equipment or delivery platforms are necessary for a planholder's specific situations, then that should be a matter of contractual arrangement between the planholder and the resource provider. It is important that this regulation not be so specific as to restrict viable operational decision-making during an actual incident.

One commenter stated that the proposal to require VRPs to identify towing vessels with the proper characteristics, horsepower, and bollard pull to tow the vessel(s), as well as vessels that are capable of operating in environments where the winds are up to 40 knots will essentially require large, stand-by towing and salvage vessels in every COTP zone in the United States. In addition, the commenter wrote that the proposal provides explicit equipment requirements for firefighting and subsurface product removal capability, and that no legitimate, verifiable rationale for these requirements is provided. The Coast Guard acknowledges that this final rule may result in the existence of sufficient towing vessels in areas where there are none now, and we feel it is beneficial to the planholders, the environment, and to the local communities that this happen. With regards to the equipment requirements found in § 155.4030(f) through (h), these are minimum requirements, written to ensure that a basic level of response capabilities is available. Determining what constitutes adequate salvage and marine firefighting resources supports the requirement in OPA 90 to ensure capabilities exist to respond to a worst case discharge scenario.

Two commenters stated that the term ''structural stability,'' as defined in § 155.4025, includes two distinct activities. As defined, it includes assessment of both ''vessel stability'' and ''structural integrity.'' In actuality, these are two distinct types of assessments that will be going on at the same time. The salvage engineer and naval architect will be looking at the remaining strength of the damaged hull (''structural integrity''); simultaneously they will be assessing the stability of the vessel as the various spaces are emptied or flooded and how the contents of various spaces will affect the remaining hull strength. The engineers will be working closely together, both on board and ashore, to provide updated information to the Salvage Master and others in the team. The assessment process will begin with the initial call to the salvage resource provider and will be continuous and on-going from that point and may not be final until the salvage is completed. The commenters stated the accuracy and timeliness of the assessments of hull strength and vessel stability will not benefit by having a set time limit imposed by regulation. The Coast Guard agrees in part and understands that the assessment and salvage survey components of the response are ongoing evolutions, being continually updated as time and environmental factors work on the vessel. Planning standard timeframes are beneficial for these actions. The person on scene needs to be able to assess the vessel's stability and structural integrity to accurately report significant facts back to the person conducting the stability calculation. We determined that the timeframes are necessary for this action to ensure an accurate, professional evaluation of the vessel's actual state.

Another commenter stated that requiring a planholder to list a primary service provider serves no useful purpose and that the logic for doing this is not included in the rule. The commenter asked for clarification on the status of the primary service provider compared to other service providers, referencing the 19 different elements in Table 155.4030(b), and stated that the combinations when more than one service provider exists are overwhelming and impractical. The Coast Guard disagrees in part. We recognize that it is unlikely any single salvage and marine firefighting contractor would be able to perform all of the elements (services) of salvage and marine firefighting in every region of the United States. Thus, more than one contractor may be necessary to perform all the services needed. The planholder would need to list each service and the resource provider who will perform it for each COTP zone the vessel transits. The primary resource provider will act as the primary point of contact when multiple resource providers are listed for the same service. For example, if a planholder lists three separate towing companies for emergency towing services, one must be listed as the primary resource provider, but all must be under a contract or other approved means as stated in § 155.4030(a). To clarify this, we have added a definition for ''primary resource provider'' to § 155.4025.

One commenter wrote that the execution of a valid salvage strategy, including other, more appropriate actions, could be hindered by a requirement to perform a hull and/or bottom survey within a set timeframe, and that this is best left to the judgment of the experienced salvor. The Coast Guard agrees in part. This rulemaking requires planholders to have, under contract, resource providers that have the capability to provide a hull and bottom survey within the response activity timeframes. It does not require that a hull and bottom survey actually be completed, as there might be instances when a survey would be unnecessary or inappropriate.

One commenter stated that computer models using industry standard software should be required and in the possession of contracted naval

architects/salvage engineers in the event of casualties (33 CFR 155.4030(d)). The Coast Guard agrees in part that advancements in technology should be leveraged to provide optimal execution of incident management, but this rulemaking does not require the use of any specific technologies.

One commenter stated that the Coast Guard should reduce or remove the equipment requirements concerning towing vessels and firefighting equipment listed in §§ 155.4030(e) and 155.4030(g) and move to a people-based approach similar to the firefighting approach. The Coast Guard disagrees. While recognizing the prime importance of people-based operations, we consider the equipment requirements found in § 155.4030 minimal requirements, listed to ensure an adequate level of necessary response equipment. Section 155.4030(e) requires a towing vessel capable of operating in 40-knot winds. The Marine Board's ''A Reassessment of the Marine Salvage Posture of the United States'' (National Academy Press, 1004; Appendix I, page 123) references the Det Norske Veritas publication Towing Operations Guidelines and Recommendations for Barge Transportation. This document is intended to provide guidance to the offshore industry on how large a tug would be required to be in order to transport major equipment offshore. These guidelines recommended using a tug capable of towing in 16.5-foot (5-meter) seas with 39-knot winds and up to a 2-knot current. This correlates with the conditions in which we would expect a 7,000-horsepower tug to be able to hold a large tanker. The commenter's reference to § 155.4030(g) is specific to the section requiring the identified resource providers to have the ability to pump 0.16 gallons per minute per square foot of deck area of the vessel. This is in line with, and based on, existing regulations, specifically 46 CFR 34–20.5, and NVIC #6–72, ''Guide to Fixed Fire-Fighting Equipment Aboard Merchant Vessels.'' The volume of water required to extinguish a fire like the one on the T/V MEGA BORG (roughly 30,000 square feet of deck area) requires a pumping capability of roughly 4,500 GPM. For this rate, portable pumps of 2,000 GPM are effective. A sufficient supply of such pumps is available around the country, and they are efficient to transport from storage to casualty sites. (The Marine Board's ''A Reassessment of the Marine Salvage Posture of the United States.'' National Academy Press, 1004; Chapter 3, page 41)

2. Firefighting

One commenter stated that locking particular pieces of equipment into one location is very expensive and places the greatest financial burden on owners. The Coast Guard agrees in part. While pre-staging response equipment may require additional gear, it is necessary to have this equipment available for meeting the required planning standard timeframes. This final rule has purposely avoided mandating specific equipment requirements (with a couple of exceptions for cargo pumping capacity and firefighting foam). The reason we wrote the rule in this manner was to allow planholders and resource providers an opportunity to assess response equipment needs for each geographical area and type of vessels calling in specific ports. This will be more cost effective than Federal requirements for specific equipment supplies staged in every port and waterway covered by this rule.

One commenter stated that the firefighting requirements contained in the NPRM are burdensome, and recommended folding the firefighting requirements into the salvage requirements and renaming them ''Marine Casualty Responders.'' The commenter further suggested that the firefighting requirements be broader and left to the salvor's discretion. The Coast Guard disagrees. It is entirely feasible that the planholder could contract with resource providers for salvage response that are different than the providers for firefighting response. We consider it important to make a distinction between the two services even though a marine firefighting response could well turn into a salvage response, or one resource provider could provide all the equipment and services required for both aspects of an emergency incident.

One commenter stated that the damage and stability models of the vessel must be available to the firefighter for use during operations, in real time and, in many instances, on site. The Coast Guard agrees that the information from the damage and stability models is useful for firefighters on scene. However, we find it impractical to require this information to always be available on scene, prior to any firefighting operations being started. We do not want to restrict the vessel's crew and resource provider while they are awaiting the assessment and structural stability, understanding that structural stability and firefighting evolutions will be addressed mutually by the parties on scene.

Two commenters stated that there needs to be a requirement in the table for a marine-firefighting plan that can be approved by the Incident Commander/Unified Command. The Coast Guard disagrees. While the regulation calls for the salvage plans to be submitted to the Incident Commander/Unified Command, marine firefighting is too time critical to wait for an approved plan before conducting firefighting operations.

One commenter noted the standard only contains the application rate for firefighting foam, and does not include a time limit for application. The commenter added that 46 CFR 34.20–5 includes a foam application time limit of 20 minutes in conjunction with a foam application rate of 0.16 gallons per minute per square foot but, without reference to this time limit in proposed § 155.4030, it is impossible to determine a recommended quantity of foam for marine-firefighting vessels to carry or shore-side resource providers to plan for. In addition, three commenters stated that the Coast Guard and SOLAS rates and duration for foam are not adequate since they are based upon an incipient-stage fire with a less than 15 minute pre-burn. One commenter asked that the Coast Guard provide guidelines for determining the amount of an agent so that all planholders are calculating the same baseline. The Coast Guard agrees with these comments and has added a 20-minute time limit to § 155.4030(g).

Three commenters stated that in addition to minimum agent application rates for extinguishment, adequate water flow for protection of exposures must be provided for. The Coast Guard agrees. The relevant text of the section reads:

> If your primary extinguishing agent is foam or water, you must identify resources in your plan that are able to pump, at a minimum, 0.16 gallons per minute per square foot of the deck area of your vessel, or an appropriate rate for spaces that this rate is not suitable for and if needed, an adequate source of foam.

We determined that the requirement as written already addresses this issue and, therefore, the requirement remains unchanged. Water flow for protection of exposures is an issue that should be addressed by the vessel's and resource provider's firefighting teams. Requiring a specific amount of water flow deviates from our intent to have this regulation require services to be provided vice prescriptive details of how those services must be conducted on-scene.

One commenter stated that foam on board the vessel should not be included in the resources listed in § 155.4030(g). The Coast Guard agrees and has added text to § 155.4030(g) to clarify that the ''resources'' that must be identified in

the VRPs are defined as resources provided by the resource provider, and not part of the vessel's own firefighting system.

One commenter stated that certain firefighting agents, in existing inventory, contain components that are no longer made. The Coast Guard neither agrees nor disagrees with this comment. While some resource providers will use existing inventories to fulfill their contractual obligations, we anticipate an increase in the required inventories of extinguishing agents to meet the needs of this regulation.

One commenter recommended that the formula to determine the required fire-suppression resources be reduced from the proposed regulations, explaining that the fire-suppression requirement, along with the response timelines contained elsewhere in the proposed regulation, has a very real potential of impeding commerce, and significantly changing the way industry does business. The Coast Guard disagrees. Title 46 CFR 34.20–5 already includes a foam application time limit of 20 minutes in conjunction with a foam application rate of 0.16 gallons per minute per square foot. Thus, the standards we used in this requirement are in line with existing regulations.

One commenter stated that pre-fire plans are unnecessary for barges or small tankers and should not be required. The Coast Guard disagrees. Pre-fire plans are an integral part of contingency planning regardless of the size or type of vessel. Therefore, the Coast Guard feels there is great benefit in these pre-fire plans.

3. Other

One commenter stated that the Coast Guard does not include a verified accounting or assessment of general marine contractor resources currently available for vessel emergency response. This is true, but the public workshop held in 1997 and feedback from existing salvage and marine firefighting resource providers showed a lack of resource providers needed to fulfill the OPA 90 requirement that there be VRPs in place, and resource providers able to meet the needs of those planholders to avoid a worst case discharge scenario. This rulemaking does not require specific types and amounts of equipment. It was deemed to be more practical for the planholder that this rule require services and service providers, since the amount and type of equipment will vary depending on the vessel's characteristics and operating environment.

One commenter pointed out that structural assessments, surveys and stabilizations are constant operations, and that they will be continually updated as the operation proceeds. The Coast Guard agrees. The commenter also recommended that all hull and bottom surveys be done in the presence of the applicable classification society surveyors. The Coast Guard disagrees, as the initial hull and bottom survey should not be delayed for any reason unless there are extreme circumstances.

Two commenters recommended that specific emergency-response operation details, such as tonnage to horsepower bollard pull capacity, type of firefighting foam, chemical, or inert gas usage, and a responder-provided emergency cargo pump capacity to vessel cargo tank capacity matrix be developed and included in the regulation. We disagree with this prescriptive approach and have written this rulemaking to leave the responsibility for determining the adequacy of the specific plan details to the planholder and contracted resource provider. This was done to ensure specific services are readily available while still maintaining flexibility for the amounts and type of equipment each individual vessel might need.

Twelve commenters stated that the requirements of 33 CFR 155.240 must be integrated into, and specifically referenced in, the rule. There is significant value in developing a computer model to calculate the damaged vessel's structural and stability analysis for very little expense. They also stated that 33 CFR 155.240 should be extended to inland and nontank vessels. The Coast Guard agrees in part and has amended the definition of ''assessment of structural stability'' in § 155.4025. The comment that 33 CFR 155.240 should be extended to inland and nontank vessels is beyond the scope of this regulation, however the Coast Guard intends to consider it in future rulemaking endeavors.

One commenter suggested that the owners and the public make use of the large number of tugs that are generally available on short notice, but not make any commitments, which result in large expenditures that do not provide any real assurances that tugs will be on scene quickly, and be in a position where they can significantly reduce the outcome of a marine emergency. The Coast Guard disagrees. Section 155.4030(e) requires towing vessels that are contractually obligated and able to meet the minimum requirements in terms of characteristics, horsepower, bollard pull, and operating in 40-knot winds. It is necessary to have specific vessels listed in the VRPs because these towing vessels are essential to any incident response.

Three commenters stated that it is not necessary to identify ''towing vessels'' in the VRP, and that only the contracting parties, which will provide the resources (i.e., the towing companies) should be identified. The commenters stated that the ability to maintain accurate lists of towing vessels is simply not possible, and would take extraordinary costs and efforts in keeping the numerous copies of the VRPs updated. They added that ensuring the proper emergency towing vessels are listed in VRPs is meaningless. The Coast Guard disagrees. It is imperative that the VRPs include an accurate listing of compatible towing vessels in a specific geographic area that the resource provider can bring to bear in an emergency situation. We understand the writers' concerns about predicting whether a compatible vessel will be in the area to respond, but we also determined that this contingency should be worked out between the contracting parties prior to having that resource provider contracted and listed in the VRP.

One commenter noted that there are not enough towing assets to meet the suggested requirements of § 155.4030(e) and that the requirements should be modified to be realistic. The Coast Guard agrees that currently there may be insufficient towing vessel capacity to meet the regulations; however, we feel that the towing capabilities required by this rule are prudent to ensure the safety of U.S. ports and waterways and to prevent or minimize environmental damage. As stated earlier, the final rule was not specifically written to increase towing capacities in the U.S., but we recognize any increase as an added benefit to the marine industry.

One commenter stated that ensuring the proper type and amount of transfer equipment is listed in VRPs is impossible or impracticable. The Coast Guard disagrees. The Coast Guard encourages the development and submission of ''Fleet Plans'' which allows a planholder to develop one VRP for all the vessels in an owner/operator's fleet.

One commenter stated that oil transfer equipment fulfilling the requirements may already be on board the ship, and in such cases it may not have to be provided by a salvage resource provider. The Coast Guard disagrees. The intent of this rulemaking is to ensure that the stricken vessel's largest cargo tank can be offloaded in 24 hours, independent of any damage that might be done to the vessel's internal systems. In light of that requirement, it is imperative that equipment can be brought on board that is totally unaffected by whatever caused

the emergency incident in the first place. Therefore, the requirement of § 155.4030(f) that the salvage resource provider be able to deliver the required on-scene pumping capability remains unchanged.

One commenter stated that § 155.4030(h) is confusing to a Western River barge operator, where navigation control depths are advertised as nine feet and very few waterway depths exceed 40 feet in isolated locations. The Coast Guard disagrees. Where a vessel does not operate in waters of 40 feet or more, the cited provision would not apply. However, should a planholder's vessel operate in any waters of 40 feet or more, they are required to ensure subsurface product capabilities are contracted for and included in the VRP for those waters.

Two commenters stated that in addition to suitable pumps and hot tap equipment, the following equipment must also be on site and ready to work: A stable, independently moored, working platform; storage tanks or lightering vessel; and the means to displace the product removed with water to avoid implosion or other damage to the hull. They elaborated that these needs, when added to the deep-water diving support or sophisticated, remotely operated vehicle needed to make the necessary connections and the extensive engineering that would be required before this type of effort could be initiated, make it highly unlikely that this type of operation could be assembled in 72 hours. They concluded that the capability to provide this service should be included in an assessment of a salvage service provider as described in the general comments. The Coast Guard disagrees. We determined that having subsurface product removal equipment ready and available for deployment on board a vessel in an emergency incident is important enough to merit its own timeframe for response. However, the specific response times are planning standards based on a set of assumptions made during the development of this regulation. We understand that these assumptions may not exist during an incident. We also realize that, at this time, the specialized equipment necessary to conduct these operations might not be located in geographical areas that would facilitate a response within 72 hours. Therefore, we have allowed a five-year maximum waiver provision as found in § 155.4055(g)(7). This request for a specialized salvage operations waiver is a separate and different issue than found in § 155.4055(c), which states the emergency lightering requirement is not subject to a waiver due to a planholder being unable to contract a resource provider to be listed in the VRP. We also strongly recommend that these capabilities be considered in a planholder's assessment of adequacy of prospective, contracted resource providers.

L. Funding Agreements

Four commenters said that the concept of a pre-agreement, in regard to funding agreements, makes sense in order to eliminate time lost to contract negotiations. The Coast Guard agrees. In order to mount a timely response, contractual agreements must be in place prior to an incident. Hesitation in awarding a salvage contract can have extremely negative effects on the outcome of response operations. By ensuring that a funding agreement is in place, this regulation will eliminate the need for any on-scene decision making regarding which resource provider to hire for the incident response. We have added text to the definition of *Funding agreement* (§ 155.4025) to ensure the funding agreement is included in the VRP prior to the plan's approval by the Coast Guard.

One commenter suggested that the use of non-dedicated resources is a viable and commercially acceptable, cost-effective way of conducting emergency-response business, and therefore should be utilized to establish appropriate salvage and firefighting standards. The Coast Guard disagrees. This rulemaking has been designed to mirror the success that the OSROs and planholders have had with pre-arranged contracts as required in 33 CFR part 155. This will ensure that both industry and resource providers are clearly aware of who will respond on scene, and in what timeframe they are capable of arriving based on the vessel's location, prior to any incident. An example of the need for pre-arranged contracts can be found in casualty case histories. For example, a casualty involving an explosion and grounding occurred on a 20,000 barrel inland petroleum tank barge operating in the Chicago Canal system. The vessel lost its deck, but maintained some buoyancy in its intact bow tanks. The owner was the named salvor in the existing VRP. The owner had no legitimate, actual salvage operations experience. Because the vessel posed a minor pollution concern, the primary concern of the FOSC was that the vessel's location prohibited delivery/pick up of fuel from a number of facilities up river from the wreck. While trucking of fuel was an option, the cost to do this was reported to be significant. In short, the owner made multiple attempts to re-float the barge over a three-month period before it was ultimately re-floated. If a reputable salvor had been pre-contracted as required by this rulemaking, the vessel could have been removed within a two-to-three week period.

Conversely, an example of the benefit of the VRP planholder having a pre-arranged contract with a reputable salvor can also be found in the salvage response to the T/V WHITE SEA, a 243-meter motor tanker, which ran aground near Ambrose Light, off Coney Island, New York on July 12, 2007. The tanker was outbound fully loaded with 548,000 barrels of Low Sulfur Fuel Oil (LSFO) when she had a steering malfunction and ran aground. Immediately upon notification, the COTP asked owners to follow their VRP and activate their salvor. The vessel's response providers mobilized a team of salvage experts, which arrived on site within hours of the casualty.

The response providers' salvage engineers, along with the Salvage Engineering Response Team from the U.S. Coast Guard, worked through the day to develop an incident salvage plan and lightering plan. Once approval was obtained from the Coast Guard, the salvage team worked through the night to remove 120,000 barrels of product from the grounded tanker. Although there was no penetration of the cargo tanks, the vessel did suffer two breaches to the ballast tanks. Upon completion of the lightering and deballasting operations, the vessel was safely refloated during the high tide on Friday, July 13th, utilizing four local tugs.

The response provider immediately commenced an underwater inspection of the ship's hull in conjunction with local authorities and the vessel's classification society, American Bureau of Shipping (ABS). Further planning was undertaken to prepare and obtain approval from the Coast Guard for the full discharge of cargo from the casualty. Under the direct supervision of company personnel, all 548,000 barrels of cargo were transferred on to another vessel to enable the WHITE SEA to safely transit light ship to a repair facility.

One commenter stated that there are very capable salvors, marine salvage and survey engineers, and certified marine firefighters, etc. who prefer to provide independent, nonexclusive, remote, and on-site assessment and consultation services, which should minimize the increase in cost to the industry. The commenter added that this will allow the owners, as part of the unified command, to select the most suitable salvage and firefighting resources for

each individual emergency and thereby improve the response beyond that available via individual entities heavily reliant on dedicated resources. The Coast Guard agrees that there are very capable resource providers who may prefer to provide independent, nonexclusive services. However, we feel that there is a need to ensure that an incident be responded to quickly and without the need for contract negotiations during an actual emergency. In order to ensure this happens, contracts must be in place as part of the vessel's response plan. In regards to the ability of the unified command to select other than contracted resource providers, and as noted earlier in this discussion, the U.S. Coast Guard agrees that there may be a need for flexibility to use other than contracted resources, under exceptional circumstances, during an incident if it is in the best interest of the response. We have added this authorization into § 155.4032(a) of the final rule.

One commenter wants the requirement for a funding agreement between the resource provider and the planholder, specifically with reference as to who will have access to that agreement, be deleted. The Coast Guard disagrees. We require access to that agreement only to verify that it is in place, agreed to by both parties, and ensures the adequacy of the response plan itself. This agreement must be part of the contract or other approved means that ensures response resources will support the vessel's plan. While the funding agreement might not be part of your VRP, all agreements that support a particular VRP must be reviewed by the USCG prior to approval.

Two commenters stated that a letter of intent (LOI) should meet the ''other approved means'' definition as long as there is a provision for a funding agreement. The Coast Guard disagrees. An LOI is a letter from one company to another acknowledging a willingness and ability to do business and cannot be enforced, as it is just a document stating serious intent to carry out certain business activities. This rulemaking requires a contract, which is an enforceable written agreement between a vessel owner or operator and resource provider. This agreement must expressly provide that the resource provider is capable of, and committed to, meeting the VRP requirements.

One commenter recommended using named consultants, instead of companies, to reduce owner cost and create flexibility to bring in any firefighting assets rather than using a company named in the contract. The Coast Guard disagrees. The intent of the regulation is to have personnel and resources under contract that are capable and contractually obligated to respond, not simply consultants. Section 155.4050(b)(3) asks planholders to consider whether the resource provider owns or has contracts for equipment needed to perform the response services as a criterion for selection of a resource provider.

One commenter asked how practical it is to expect planholders and resource providers to develop pre-negotiated pricing for services for all of the myriad circumstances and geographic locations of casualties. While the Coast Guard agrees that there will be many different variables in the level and detail of responses to an incident, it is possible for the planholders and resources providers to work out funding agreements during the contractual negotiations. One such method has been for contracting parties to use a Basic Ordering Agreement (BOA) prior to any actual response. Regardless, the Coast Guard feels that contracts between the planholder and the resource provider are best left to their discretion, and will not be specifically addressed in this regulation.

One commenter stated that it is unrealistic to include a written funding agreement as part of the ''contract or other approved means.'' The commenter noted that the assumptions that the absence of a funding agreement will delay a response because of negotiations or that the presence of one will not delay a response may be equally specious. The Coast Guard disagrees. A funding agreement is of primary importance in ensuring there are no delays in a response due to contract negotiations.

M. Considerations for Choosing Resource Providers

1. General

One commenter asked what it means to be ''capable to respond'' or ''capable of providing service,'' and if that means capable subject to availability. The definition of ''capable'' is ''having attributes required for performance or accomplishment'' (Webster's Ninth New Collegiate Dictionary, 1991). As used in the regulation this means that the planholders will only list in their VRP resource providers who have provided written consent to be included. This written consent would include a statement from the resource provider that they are capable of providing the salvage and/or marine firefighting services they contracted to provide within the response times in Table 155.4030(b), Salvage and Marine Firefighting Services. The specific response times are planning standards based on a set of assumptions made during the development of this regulation. These assumptions may not exist during an actual incident. Therefore, Table 155.4030(b) will be used as a planning standard instead of a performance standard to ensure that under ordinary circumstances the resources are capable of arriving at the vessel in the required response times. For example: If resource provider A agrees to and/or contracts to perform a specific service, they must have the required equipment and/or personnel to complete the service in the times listed in § 155.4030(b) under ordinary circumstances. If the resource provider needs to have its resources on scene in four hours, the equipment and/or personnel should not be located 10 hours away.

One commenter would like drill and exercise requirements added as a requirement for resource providers. The Coast Guard agrees. The selection criteria under § 155.4050 lists a successful record of participation in drills and exercises as a consideration criterion. The requirement for a resource provider to participate in drills and exercises after a contract has been agreed upon is already included in 33 CFR 155.1060. This requirement covers all vessels that are required to carry VRPs. However, we have added § 155.4052 to address specific exercise requirements.

One commenter stated that all resource providers should own or have contracts for the equipment needed to perform response services. The Coast Guard disagrees. While direct ownership or contracts for resource providers are beneficial and addressed as a minimum for consideration by the planholder in choosing a resource provider in § 155.4050(b)(3), the Coast Guard does not intend to place ownership requirements upon resource providers as the resource provider may choose to subcontract certain aspects of their VRP responsibilities. As stated earlier, the intent of this regulation is to ensure proper response services are available and not to dictate the details of those services.

One commenter stated that this regulation would render obsolete the firefighting vessels supplied by the oil transport industry in some west coast ports. The Coast Guard understands the concern that this could happen. Section 155.4030(g) addresses firefighting equipment and VRP compatibility. The pumping capabilities of these private sector vessels need to be scaled to the size of the vessels for which they are

providing coverage. The existing firefighting vessels in question may not be appropriate for the largest tankship, but they could be used for smaller tankships and tank barges. If the referenced vessels meet the requirements of § 155.4030(g), the existing vessels may be listed as resource providers.

One commenter stated that the proposed rule does not recognize a ship owner's ability to assess structural stability using in-house or classification society resources. Section 155.4050 states that the planholder is responsible for determining the adequacy of the resource providers they intend to include in their VRPs, and sets forth 13 criteria, which must be considered in that selection. Nothing in this rulemaking precludes a planholder from listing either in-house resources or classification societies as long as they have addressed the criteria listed in § 155.4050, have certified in the VRP that the criteria was considered, and the potential resource providers agree to be listed in the VRPs.

One commenter stated that the rule as written would encourage the development of private and public firefighting capabilities at each port where the transfer of oil takes place, and that tank vessel owners and operators would be forced to enter into multiple contracts for firefighting services in the geographical areas served. The Coast Guard agrees in part and understands multiple contracts in a geographical area may occur. Planholders must submit their VRPs in accordance with the geographic-specific appendices as found in § 155.1035(i)(9) and § 155.1040(j)(9). In doing so, planholders must list each required resource provider that is under a contract or other approved means to respond within that specific area. This rule does not require planholders to enter into multiple firefighting contracts within a specific area. Based on industry information, national firefighting companies are currently available and offer a variety of response solutions for firefighting packages of equipment, materials, and personnel in various geographical areas. Industry also indicated that they would respond to large fires involving cargo by contacting one of these major national firefighting companies rather than rely on local resources.

One commenter asked how the Coast Guard will determine if contracted towing vessels have the adequate horsepower and/or bollard pull required by § 155.4030(e). The commenter requested that we bear in mind the requirements of 33 CFR part 168 ''Escort requirements for certain tankers,'' which governs operations in many ports. Section 155.4030(e) states that the planholder must ensure the proper towing vessels are listed in the VRP. It is the planholder's responsibility, when determining adequacy of the contracted resource providers, to hire resource providers that have towing vessels which meet the listed criteria, and to list those vessels in the VRP. Part 168 ''Escort requirements for certain tankers,'' applies only to laden, single-hull tankers of 5,000 gross tons or more, transiting Prince William Sound and Puget Sound. In addition, the performance and operational requirements required by § 168.50 are more stringent that what is required in § 155.4030(e). However, if a towing vessel meets the requirements of 33 CFR 168 it would also suffice for this rulemaking. Therefore, the NPRM and the final rule contain these minimum requirements to meet the stated purpose of this regulation.

One commenter stated that involving firefighters in vessel response plan development is not a reasonable requirement because it only makes the VRP development and approval process longer and more costly. The Coast Guard disagrees. Section 155.4045(b) requires the resource provider to certify in writing that they find the VRP acceptable. It does not require them to be involved in drafting the VRP; however, if they find it unacceptable, we anticipate the planholder and resource provider will work together to formulate a VRP that all parties agree to and that meets the requirements of this regulation.

One commenter stated that § 155.4035(b)(2) requires the planholder to present a copy of the marine firefighting pre-fire plan to the resource provider. The resource provider must then certify, in writing, that they find the VRP acceptable and agree to implement the VRP. The commenter recommended that, as an alternative, this certification be included as part of the ''written consent'' document provided to the planholder certifying that they can meet the services listed under §§ 155.4030(a) through (g). The Coast Guard disagrees. The marine firefighting pre-fire plan is vessel specific; therefore, it is imperative that the resource provider have in their possession an exact copy, for each vessel that they have been contracted for responding to a casualty for pre-fire incident planning and training purposes.

One commenter stated that for ships traveling to multiple ports, the requirement to have marine-firefighting resources providers certify, in writing, that they accept and agree to implement the VRP is a very difficult issue. The only alternative may be to create multiple individual ''marine-firefighting pre-fire plans'' for each vessel, which adds possible confusion to the response. The Coast Guard disagrees. Firefighting resource providers will need to certify in writing that they agree to be listed in the VRP as part of a contractual agreement. They can choose whether or not to do so. The Coast Guard determined that the commenter might have misunderstood the requirement for a pre-fire plan as stated in § 155.4035(b)(2). There will not have to be multiple pre-fire plans for each vessel. There is a distinct difference between the VRP and the pre-fire plan. The VRP will have a listing of multiple resource providers. However, there needs to be only one pre-fire plan per vessel as it deals with the character, construction, cargo, and safety systems of the vessel itself.

One commenter stated that the rule has no requirements related directly to the adequacy of the resource provider. The commenter asked what process is in place to assure the public that the resource providers are not committed beyond their capabilities, suggesting that there be limitations on how many times a resource provider may be listed in vessel VRPs. The commenter asked what mitigating factors will be in place should the resource provider be unable to respond within the time allotted by the proposed regulations. While there are no direct requirements stating adequacy of resource providers, there is an extensive section, § 155.4050, detailing the importance of the selection criteria for planholders to consider in selecting a resource provider. It is in the planholder's best interest to approach the selection process in a vigorous and exacting manner. Limiting the number of VRPs in which a resource provider can be listed will not be addressed as any limit on the number of a resource provider's clients would necessarily be arbitrary because of the wide variation in resource provider size and capability. The availability of services to meet a planholder's needs is a planholder's responsibility and is a factor a planholder should consider when contracting with the resource provider. In the event of a spill, the Coast Guard will expect the planholder to respond in accordance with its VRPs (unless specific circumstances warrant deviations, as already discussed), regardless of other spill events that may be occurring at the time of the response. Therefore, in its planning process, the planholder should discuss with its

service providers their capabilities to handle multiple incidents and the number of other planholders the service provider is already committed to.

Also, if a planholder's capabilities are diminished because service-provider resources are committed elsewhere for a response, that planholder is obligated to notify the COTP for the zone in which the planholder operates of: (1) The planholder's reduced capability; and, (2) the planholder's plans for overcoming the shortfall. This will enable the COTP to determine whether any operating restrictions should be imposed on the planholder until such shortfalls are overcome. The Coast Guard recently published guidance to the public addressing this issue. See Navigation, Vessel and Inspection Circular (NVIC) 01–07, ''Guidance On Vessel And Facility Response Plans In Relation To Oil Spill Removal Organization (OSRO) Resource Movements During Significant Pollution Events.'' If the planned response resources are not available, or have traveled beyond the required response times, secondary or cascading resources may be relied upon if approved by the Coast Guard. This may mean compliance with any one of the alternatives provided within the definition of contract or other approved means (33 CFR 155.4025). The planning requirement may be met through a number of means as referenced above, and the Coast Guard will exercise discretion in implementation and enforcement of the requirements commensurate with the circumstances (as it did following Hurricanes Katrina and Rita). In addition, the FOSC has the authority to allow a deviation from the VRP if it would provide for a more expeditious or effective response to the incident in the case of a resource provider's inability to perform their required services. If a resource provider is found to be non-responsive or deficient through field verifications or the results of Preparation for Response Exercise Program (PREP) drills or Spill of National Significance (SONS) exercises, then the Coast Guard would not approve response plans that list them as a provider. Therefore, if a resource provider is found deficient on a continuing basis, the planholder would be required to change resource providers or risk not being able to operate their vessel in U.S. waters until their VRP is in compliance with the regulations.

One commenter stated that insurance may be very difficult, or cost prohibitive, for salvage and marine firefighters to obtain for the type of work proposed. Although § 155.4050(b) requires consideration of 13 items for selection of a resource provider, and insurance is one of them, it is only required to be considered by the planholder for selection. In other words, in certain situations where state or local laws permit, it may be completely acceptable for a planholder to select an uninsured resource provider.

One commenter stated that qualifications through experience are not an adequate measure to judge a person's or organization's ability to respond in a marine firefighting incident. The Coast Guard agrees; § 155.4050 lists 13 separate selection criteria, of which qualifications through experience is only one part.

Five commenters stated that a ''successful record of participation in drills and exercises'' (§ 155.4050(b)(7)) and ''membership in organizations'' (§ 155.4050(b)(9)) are not valid criteria for selection, and that they should be deleted. The Coast Guard disagrees. This section states that:

> When determining adequacy of the resource provider, you must consider as a minimum the following selection criteria.

Both of these issues are marks of professionalism and lend credibility for a planholder's selection process. The definition of ''successful'' in this context will have to be determined by the contracting planholder to satisfy its standards for hire.

One commenter stated that formal approval of a salvage plan (§ 155.4050(b)(8)), such as a stamp or letter, is not a verifiable practice. The experience of the resource provider or other planholder is most important. The Coast Guard agrees in part. We agree that experience is vitally important, but we consider being able to produce salvage plans that were approved and used by incident commands helps address the resource providers' experience level.

2. Coast Guard or Third-party Vetting

One commenter agreed that the regulations for salvage and lightering should require analytical systems and a contractual relationship with a salvage company. Such arrangements are the industry standard and represent a reasonable and achievable requirement. However, the commenter also stated that a process similar to the OSRO classification system should assess the capability of these service providers. The Coast Guard disagrees that a classification system for salvors is needed at this time. This rule addresses the capabilities of the resource providers with the 13 point selection criteria, found in § 155.4050, that planholders will consider in the selection of a resource provider prior to entering into a contractual arrangement. Classification of resource providers is an issue that the Coast Guard can take under advisement, should the need arise in the future.

Three commenters recommended that the Coast Guard develop response-capability testing and proofing methodology for service providers and a marine-firefighting certification program including training standards. They suggested adding requirements to ensure that the resource provider is familiar with the local area plan pertaining to marine firefighting and salvage operations. The Coast Guard disagrees in part. We determined that the standards and guides incorporated by reference in this regulation sufficiently provide, as a basis, an adequacy determination for planholders to use in their selection process. As to the suggestion that resource providers be familiar with the local area plans, this is beneficial and has been included in § 155.4050(b)(15) as a consideration when determining the adequacy of resource providers.

One comment stated that the Coast Guard should require professional standards for marine firefighters to ensure all responders have similar training and backgrounds. The Coast Guard disagrees. We have addressed standardized training for marine firefighters by stating they be trained in accordance with § 155.4050(b)(6). While professional standards for firefighters would be beneficial for all parties concerned, it is beyond the scope of this rulemaking.

Four commenters stated that having each individual planholder attempt to interpret these criteria and apply them will be inefficient, cause confusion, and reduce consistency. They recommended that this salvage and marine firefighting vetting be administered by classification societies, through the ISO 9000/14000 programs, American Waterway Operators, or some other approved third party, based on the criteria in the table provided by the Coast Guard. The Coast Guard agrees that this is a reasonable goal. Initially the Coast Guard will rely on the established VRP review process augmented by surveys and reports by Coast Guard COTP field personnel done, if necessary, in conjunction with discussions with local port partners. After reviewing the effectiveness of this final rule, the Coast Guard will retain the option of having it administered by a third-party organization. However, this final rule relies on due diligence from both the planholders and the resource providers to ensure an

acceptable level of quality in meeting the criteria is achieved.

3. Use of Public Resources

One commenter asked if private responders can ever really be the primary responders, if public responders can be contracted, and if planholders will have the ability to evaluate public resources. Private responders can be primary responders and may need additional equipment to meet a planholder's needs in all required geographical areas. However, this final rule does not mandate additional equipment for private responders. Public responders can be contracted up to the restraints listed in § 155.4045(d). It must be understood that because public marine-firefighting services have jurisdictional boundaries, it may not be appropriate to select one public marine-firefighting service to cover a whole COTP zone. Since OPA 90 emphasizes the use of private over public resources, public marine-firefighting resource providers should only be listed when the planholder has determined no private resources are available that can meet the response times and the public resource has a responsibility to respond to incidents in the area specified in the VRP. Also, the public resource must agree, in writing, to be included in the VRP. Planholders will be able to evaluate public resources in much the same way as is required for private resource providers, as stated in § 155.4050. In addition, the COTP and the FOSC will have a critical review and oversight role in agreements that local municipalities may consent to for marine-firefighting support. The Coast Guard will separately publish additional guidance in this area.

One commenter stated that volume VI, chapter 8 of the ''USCG Marine Safety Manual'' anticipates that local fire departments will be the lead agency in case of a vessel fire. The commenter added that guidance in this chapter requires the Coast Guard to develop area contingency plans (ACPs) and include local resources for firefighting, but does not address private firefighting resources. The commenter concluded that first response to a vessel should rely on the ACPs; therefore, times in Table 155.4030(b) for at-pier firefighting response should be deleted. The Coast Guard disagrees in part. The commenter is correct in quoting the Coast Guard's stance as found in the ''USCG Marine Safety Manual''; however it also states that:

> [A] vessel/facility's owner and/or operator is ultimately responsible for the overall safety of vessels/facilities under their control, including ensuring adequate fire fighting protection. (''USCG Marine Safety Manual'', Vol. VI, chapter 8, section B.)

This principle is also embodied in this rulemaking and it ensures the planholder has contracted for adequate response services, regardless of whether the resource provider is a public or private entity. We agree that all parties involved will rely on ACPs to plan for emergencies, and all port partners involved in developing ACPs should take this rulemaking into account. To this end we have revised § 155.4030(d) by adding text requiring that the information contained in the response plan must be consistent with applicable ACPs and the National Oil and Hazardous Substances Pollution Contingency Plan as found in § 155.1030(h).

One commenter said that the regulations should encourage and permit utilization of local resources where practical, jurisdictional, and cooperative issues are worked out, as this will provide the lowest cost to the maritime community and encourage their participation in local cooperatives. The Coast Guard agrees and this final rule allows for such cooperatives.

Two commenters stated that the requirements for external firefighting capability require further discussion as to the appropriate role of public and private resources and the correct approach to ensuring their operation. The Coast Guard disagrees. The entities involved, both public and private, will work with the planholders to ensure a timely and effective emergency response. All parties are encouraged to use the ACP process to create workable processes and VRPs for responding to a marine-firefighting incident. Examples of ACPs are on the Internet at the Coast Guard's Homeport Web site: *http://homeport.uscg.mil*. The ACP information is under the ''missions'' tab in the ''environmental'' section. The Coast Guard plans to issue policy to Area Committees, who produce and maintain Area Contingency Plans (ACPs), on how the Salvage and Marine-Firefighting sections of the ACP can ensure planholders are supported in their planning efforts. ACPs describe the strategy for a coordinated Federal, state, and local response to a discharge of oil or a release of a hazardous substance within a Captain of the Port Zone.

Two commenters stated that it is unacceptable that some commercial marine-firefighting providers can rely on the Coast Guard or local responders to provide critical support personnel and equipment once they arrive with limited, specialized equipment and personnel. The Coast Guard disagrees. When consenting to be a listed resource provider, that provider agrees to have all the personnel and equipment needed to provide the services for which they have contracted. If local public responders are depended upon to provide resources, they must agree in advance to be listed in the VRP. The planholder must ensure any resource provider is capable of providing the services needed, as found in § 155.4045(a).

One commenter stated that it is the legal responsibility for fire departments to respond to fires in vessels within their jurisdiction. The Coast Guard agrees in part. However, since OPA 90 emphasizes the use of private over public resources, public marine-firefighting resource providers should only be listed when the planholder has determined that no private resources (which can meet the response times) are available, and that the public resource has responsibility to respond to incidents in the area specified in the VRP. In other words, this regulation requires that planholders have under contract or other approved means, private resource providers capable of, and intending to commit to, meeting the VRP requirements whenever possible. Nothing in this regulation precludes public emergency responders from executing their duties. Consistent with the requirements of § 155.1010, we reiterate that these are planning and not performance requirements.

Three commenters stated that public marine-firefighting resources are often prohibited from responding outside their own jurisdiction, with the exception of mutual-aid agreements, and that this would preclude the direct use of these resources by commercial contract where port areas often encompass numerous jurisdictions between a vessel's initial entry into a COTP zone and its arrival at a terminal or facility unless they are part of a local marine-firefighting cooperative. The Coast Guard agrees and addresses this issue in § 155.4045(d) by stating that:

> Public Firefighters may only be listed out to the maximum extent of the public resource's jurisdiction, unless other agreements are in place.

Should the public marine firefighters and the planholder come to an acceptable agreement regarding when and where the public resource can be used, then that agreement must be included in the VRP.

Three commenters stated that the regulation ignores public firefighters as responders, because the rule implies that public firefighters only be used as a last resort, and that the regulation should not state that the Coast Guard

considers it unreasonable to expect marine-firefighting resources to respond outside their jurisdictional boundaries. The commenters added that the regulation should recognize that public resources may be listed for response if it has agreed to do so where a mutual aid system has been implemented that will permit response regardless of individual agency boundaries. Accordingly, the second clause in the last sentence of § 155.4045(d), ''but the Coast Guard considers it unreasonable to expect marine-firefighting resources to do this'' should be deleted. The Coast Guard disagrees. Section 155.4050(d) clearly states that public marine-firefighters may be listed as resource providers. However, public resources must agree in writing to be included in the VRP. We have added a restriction that they may only be listed to respond out to the limits of their jurisdiction, unless other agreements are in place. Other agreements could reflect the public firefighter's commitment to respond beyond their jurisdictional limits. We also do not agree that Federal law, or this rulemaking, should support or encourage public firefighting agencies to respond outside of their jurisdictions, as that would be an attempt to preempt local laws and authorities. There are cases where a local agency will be a member of a mutual-aid association, in which an agency has agreed, as a member of the association, to respond outside their jurisdictional boundaries. In this case, the public agency can agree in writing to do so as a planholder's resource provider, as allowed in § 155.4045(d).

One commenter stated that it is vital that any contract provider be required to integrate qualified public agencies into their VRPs. The Coast Guard disagrees. If the public marine-firefighting agency agrees to be listed in the planholder's VRP, then that is acceptable. However, it is beyond the scope of this rulemaking to require that public agencies be listed under contract or other approved means in the planholder's VRP.

Five commenters stated that a local firefighting entity in command of an incident would not necessarily recognize the contents, strategies, and service providers included in the VRP. This scenario would place the vessel owner in the unenviable position of diverting from the VRP since local regulations give command authority to the local firefighting entity. The Coast Guard agrees in part. Each planholder and resource provider will have to ensure these problems are addressed, and should be actively involved in the port partners program. In doing so, they would have input into their location's ACP, which in turn would enable communications between the resource provider and the local public firefighters. That type of communication and mutual cooperation is not required by regulation; however, it is part of a professional involvement in the emergency response operations community and will be fostered by participation of all parties in the required drills and exercises.

Two commenters stated that public firefighting resources represent a significant portion of available firefighting equipment and personnel around the country, and as such, there is a need to integrate these resources into the overall response picture, and cooperation between public and private entities should be encouraged by the regulations. The Coast Guard agrees, and envisions the formation of mutual-aid agreements and coordination between marine-firefighting entities as a result of this regulation. We urge all interested parties to pursue this. In addition, we anticipate local ACPs will reflect these changes as well.

One commenter is not opposed to the use of public firefighters, but added that if they are part of a response plan there must be requirements to provide guidelines for interaction between the resource provider and the public firefighters to ensure cohesion when working together. These requirements should include, but not be limited to, drill planning and participation, training, and a clear understanding of each participant's role prior to responding to an incident. The Coast Guard agrees that there should be strong coordination and communication between the private and public firefighting resource providers. The intent of this rulemaking is to issue broad requirements regarding contractual arrangements that must be in place and listed in a planholder's VRP. We do not intend to dictate how the parties involved conduct their business after those arrangements are in place. Participation in the required drills, exercises and training, and a clear understanding of each participant's role are all vital aspects of proper planning and preparedness for emergency response, and we expect that the interests of all concerned will lead to the planholders and resource providers participating in proactive roles.

One commenter stated that, based on the proposed response times, it appears that local public fire agencies will have to be a part of any response plan. With that in mind, they added that it is vital that any contract provider be required to integrate into the ICS systems that have already been established. The Coast Guard agrees in part. It is not mandated that public agencies will have to be a part of a response plan; however we envision that they will be included for most in-port pier locations in a VRP. Regarding the comment that any contract provider (resource provider) must integrate his or her organization into the ICS systems, this is already addressed by § 155.4030(c) and (d).

N. Integration of the VRP Into the Unified Command System/ICS

One commenter recommended that the Coast Guard mandate the use of the Unified Command System (UCS)/ICS to facilitate public and private cooperation in a structured system. The Coast Guard disagrees in part. Homeland Security Presidential Directive 5, ''Management of Domestic Incidents'', found online at *http://www.nimsonline.com/presidential_directives/hspd_5.htm*, creates a single, comprehensive National Incident Management System (NIMS) using the national NIMS/ICS for all emergency incidents. The National Response Plan, Regional Response Plans and ACPs all do the same. We anticipate that any incident, which would be managed by a unified command, would fall under this family of plans and therefore we do not consider it necessary to mandate the use of NIMS/ICS.

One commenter stated that § 155.4030(c), the ''Integration into response organization'' summation, should read:

> The response organization must be consistent with the requirements set forth in §§ 155.1035(d) and 155.1040(d) and 155.1045(d).

The Coast Guard agrees in part. Section 155.1030(d) does not address integration into response organizations and was listed in the NPRM in error. Section 155.1035(d) addresses Shore Based Response Activities and is the correct cite. The text in § 155.4030(c) has been amended to reflect the correct reference. ''Integrated into the response organization'' means that the resource providers operate as part of the incident command or the unified command as organized by the FOSC. The Coast Guard disagrees with the commenter's stating § 155.1045(d) should be listed, because that particular cite is not applicable to the requirements of this regulation. Vessels that are covered by § 155.1045 are not required to list salvage and marine firefighting resource providers.

Nine commenters stated that the Coast Guard needs to provide clear guidance regarding where salvage and firefighting fit in the ICS, as the Salvage Master is

often the most knowledgeable person in the response organization. They stated that the proposed language does not adequately address coordination and response organization dynamics, adding that if the Coast Guard's intent is to utilize unified command with salvage and firefighting efforts appropriately incorporated along with existing FOSC authority then the intent and implementation specifics should be clearly articulated. The Coast Guard agrees that Salvage Masters are very knowledgeable, and that there is a need to be clear where they fit into the response organization. Historically, the salvors and marine firefighters have been placed in the Operations Branch. However, it is the prerogative of the Incident Commander/Unified Command to structure the ICS organization to best fit the incident's needs. Thus, this final rule requires only that the response plan includes provisions on how the salvage and marine firefighting resource providers will coordinate with other response resources, response organizations, and OSROs, not the specific roles the providers will fill in the ICS structure.

Four commenters stated that it is critical that marine-firefighting resource providers are integrated into any local UCS/ICS and not operating independently. The Coast Guard agrees and included this provision in both the NPRM and this final rule as found in § 155.4030(c).

Two commenters recommend deleting § 155.4030(d), ''Coordination with other response resource providers, response organizations and OSROs,'' because it shows a lack of understanding of the ICS structure and the command structure that is required. They stated that salvage and marine firefighting resources will not normally coordinate with other response resources, response organizations, and OSROs, as it is the responsibility of the ICS structure to coordinate their activities. The Coast Guard disagrees. This section is intended to address the coordination between the differing response organizations before an incident occurs. It will entail inter-organizational outreach, participation in the ACP process, and communication between the planholders, resource providers, and other affected port partners. We consider it important to ensure that all the pre-incident coordination is in place prior to an emergency situation, and therefore have not changed the language of this section. We acknowledge, however, that the Incident Commander/Unified Command will be responsible for coordination activities after an incident occurs and during all phases of the incident response.

One commenter asked if the Coast Guard was planning a revision to the ''ICS Field Operations Guide'' or the ''Incident Management Handbook.'' In August of 2006, we revised the ''U.S. Coast Guard Incident Management Handbook,'' COMDTPUB P3120.17A, and it is for sale from the Government Printing Office. The document is also available on the Internet at the Coast Guard's Web site: *http://homeport.uscg.mil.* It can be found by selecting the 'library' tab on the top of the page, then by selecting the 'Incident Command System (ICS)' tab on the left side, then selecting the 'Incident Management Handbook (IMH)' tab under the Job Aids section.

One commenter stated that it is critical that these regulations leverage public agencies specializing in marine firefighting and encourage specialization by those that do not. The commenter added that the regulations should support the development and enhancement of existing marine-firefighting units within an agency or region, thereby providing the opportunity for a cost-effective public/private partnership, which would make the public fire agency a first responder and lay the foundation for the private firefighting resource providers. The Coast Guard agrees that strengthening existing public firefighting agencies benefits everyone, and we anticipate that this will happen through strong port partnerships and involvement in the ACP planning and exercises. However, we consider it more important to ensure that the contracted resource provider is able to adequately provide the services that they have agreed in writing to provide at the time the VRP is submitted. If a public agency can meet this requirement and agrees to do so, then they are welcome to be listed as a resource provider in a VRP. However, it is beyond the scope of this regulation to require that it be done, or to require that the public agency meet the criteria for contracting. If they can not be listed based on their current capabilities, we require contracting with a private resource provider instead.

One commenter suggested that response plans should integrate with, and make specific reference to, salvage and marine-firefighting sections detailed in each ACP associated with vessel transits. The Coast Guard agrees. According to 33 CFR 155.1030(h), a planholder is already required to align the vessel response plan with appropriate ACPs.

One commenter stated that there is an assumption that the salvage/firefighting resource provider will be the Incident Commander required by § 155.4035, but noted that this may not be the case in many incidents. The Coast Guard disagrees and can find no reference in § 155.4035 to the resource provider being an Incident Commander. Section 155.4030 requires integrating the resource provider into the response organization, but includes no specific requirement that they have to be the Incident Commander.

O. Worker Health and Safety

One commenter stated that § 155.4030(i), ''Worker health and safety,'' is listed in the wrong section. The Coast Guard agrees in part. This issue is as vital to emergency response as the other services listed in this section, and must be addressed in the contractual arrangement between the planholders and resource providers prior to an incident occurring. However, we acknowledge that the exact location of this section may create confusion and have redesignated § 155.4030(i) in the NPRM to § 155.4032(b) in the final rule.

One commenter stated that worker health and safety is imposed on salvors, but not on the OSROs, even though consistency between the two requirements is important. The Coast Guard agrees that consistency is important among regulations and will take this comment under advisement should we revise the OSRO regulation in 33 CFR 155.1010. However, it is beyond the scope of this regulation.

One commenter stated that they do not feel that the Coast Guard can mandate that planholders bear any responsibility for the health and safety of independent contractors subject to Occupational Safety and Health Administration (OSHA) requirements. The commenter recommended deleting this provision. The Coast Guard disagrees as the existing § 155.1055(e) states:

> Nothing in this section relieves the vessel owner or operator from the responsibility to ensure that all private shore-based response personnel are trained to meet the OSHA standards for emergency response operations in 29 CFR 1910.120.

As this is already mandatory for applicable planholders, we consider § 155.4032(b) valid and necessary. We have, however, revised the text of § 155.4032(b) to refer to the existing requirements.

One commenter stated that the health and safety requirement is already addressed by 29 CFR 1910.120, as noted in the National Contingency Plan (40 CFR 300.150). The commenter recommends this be changed to reference 29 CFR 1910.120 as the

standard. The Coast Guard agrees and has revised the text of § 155.4032(b) to reflect this.

P. Waiver Provisions

Six commenters dealt with the need for a process and mechanism for the Coast Guard COTP to address concerns that a VRP does not meet the requirements of this section for a specific COTP zone. Capabilities nationwide vary greatly, making it critical the COTP have the ability to rapidly address deficiencies that could place a vessel and port at risk. The Coast Guard agrees and, using § 155.4020(c) as authority, a COTP can stop a vessel from conducting oil transport or transfer operations unless the requirements of this regulation are met. If proper resource providers may not be available to meet the required response times by the date this regulation is in effect. Therefore, § 155.4055 allows for a temporary waiver request. The local COTP must review and comment on this waiver request before forwarding it to the Coast Guard Commandant, Director of Prevention Policy (CG–54) for final approval. The Coast Guard intends to publish guidance to field units regarding consideration of waiver requests. In addition, the COTP and local port partners will be active in reviewing the Salvage Annex of the ACP, which will describe in detail local salvage and marine-firefighting resources.

One commenter did not agree with the proposed waiver periods, which it states seem to be selective yet unsupported by logic. The Coast Guard disagrees. The waiver periods were developed after analyzing information gathered during the 1997 public workshop, and from information gathered from the salvage and marine firefighting industry for the 2002 Regulatory Assessment. We are not mandating additional equipment requirements under the final rule.

Two commenters stated that the salvage and firefighting capability should be built up over time, much like the buildup of OSRO inventories has been accomplished in five-year cap increments. We agree in part. Our analysis indicates that no new planholder capital expenditures will be necessary. Before the promulgation of this rule, industry began its capital buildup of equipment as part of its business model for the salvage and firefighting services it provides on a daily basis, not as a result of the requirements of this rule.

One commenter suggested limiting temporary waivers to a one-year maximum for planholders who are unable to obtain a salvage and marine firefighting resource provider, because all affected entities have had ample time to prepare for this requirement. The Coast Guard disagrees. We recognize that this regulation is a major change in planholders' VRPs and that the ability to acquire these services is dependent on whether or not such required services are available. We understand that there may be a period of time where personnel, equipment, and service contracts are being acquired and/or relocated to areas to meet the planholders' needs. For this reason we feel that the proposed waiver times are reasonable, and have left them unchanged in this final rule.

Five commenters stated that any temporary waiver of these requirements by a COTP should be coordinated with state officials and harbor safety committees, and asked if the local COTP has the resources and/or expertise to evaluate and approve the waiver. The Coast Guard disagrees; this is a Federal regulation, and for that reason the waiver authority lies solely in the Coast Guard's discretion. Any waiver request is first evaluated and commented on by the local COTP, who may consider input from other entities including state agencies, the local area committee, and the harbor safety committees prior to forwarding the request to the Coast Guard Commandant, Director of Prevention Policy (CG–54), who will make the final determination. The COTPs have the resources to evaluate and recommend approval or disapproval of waiver requests in an appropriate manner.

One commenter stated that the Coast Guard should track waiver requests made pursuant to § 155.4055, and consider funding resources if many requests are from the same area. The Coast Guard disagrees with this comment, in part. While we do intend to track waiver requests to identify those areas of the country where resource providers are lacking, we do not have funds to provide to those areas.

Q. Economic Comments

One commenter stated that an appropriate retainer to cover costs can be sustained by the industry if the savings from a prompt, successful response complements them. The Coast Guard does not agree or disagree. Because this commenter suggested no changes to the NPRM, the Coast Guard did not consider any changes as a result of this comment.

One commenter stated that the money spent for this rule would be better spent through prevention, such as crew training and modernization of equipment. The Coast Guard agrees that any money spent on training and modernization is money well spent; however that would not address the need to have planned for, and already contractually obligated, appropriate salvage and marine-firefighting equipment for responding to a worst-case-scenario incident.

One commenter stated that there are upcoming opportunities offered by pending port security legislation, which would allow the cost of these services to be spread among the entire port community. The writer is referring to the Coast Guard and Maritime Transportation Act of 2004 (Pub. L. 108–293), which was signed into law after the comment period on the NPRM closed. The Coast Guard recognizes that that law authorizes the Coast Guard to reach beyond tank vessels with its VRP regulations. We considered withdrawing this regulation until regulations pulling nontank vessels into the VRP regime were promulgated. We decided that such a delay would not be acceptable because it would postpone the time savings and efficiency benefit of listing resource providers for current planholders.

One commenter stated that marine firefighting is one of the poorer or least publicly funded services, thus amounting to an unfunded mandate. Section 155.4045(a) states that planholders may only list resource providers that have been arranged by contract or other approved means. This means that a public marine-firefighting department would have to agree, in advance, to be listed in the VRP. This regulation imposes no new requirements on public marine firefighters, and therefore is not an unfunded mandate.

One commenter wanted to make it known that the tank barge industry is different than the tank vessel industry, and responders and service providers will take into consideration all aspects of costs, adequacy and fairness of the proposed rules. The Coast Guard anticipates that differences in circumstances will be discussed prior to any contractual arrangement.

One commenter explicitly stated that shippers (particularly those who operate in smaller or remote ports) will be forced to consider other, more cost-effective modes of transportation, and that the net effect will be a loss of liquid tonnage traveling on the inland waterway system as this traffic moves to other transportation modes. The Coast Guard disagrees. Our economic analysis for the final rule shows that VRP holders would not incur additional capital costs as a result of the final rule,

but would still incur paperwork costs of about $1.2 million annually. As to the net loss of liquid tonnage traveling on the inland waterways, the absence of significant additional costs should result in little or no net loss due to this regulation.

One commenter questioned why five percent of the planholder's revenue will be applied to fund this proposition instead of using that money to eliminate single-hulled barges. The Coast Guard assumes this comment stems from the analysis found on page 55 of the 2002 Regulatory Assessment, which discusses the 5% impact on only a few small businesses.

The intent of this final rule is certainly not to divert monies needed to fund the change over to double-hulled barges; rather, it is to ensure that adequate resources are in place to avoid a costly response to an oil spill if possible. From our final small business analysis, we found that the final rule will not impose additional capital or infrastructure costs on small businesses. We estimate businesses will still incur paperwork costs of about $1.2 million annually or about $1,500 per business.

Eight commenters stated that the NPRM cited the M/V NEW CARISSA as an example of the need for the enhanced salvage capacity it proposes, even though the M/V NEW CARISSA was a freighter that would not be covered by the rulemaking. The commenters are referring to the mention of the M/V NEW CARISSA in the May 2002 regulatory assessment, ''Salvage and Marine-Firefighting Requirements for Vessel Response Plans'' (USCG–1998–3417). In this regulatory assessment, the Coast Guard referenced the M/V NEW CARISSA as background information in the context of a recommendation the Marine Board made in its 1992 report that:

> All commercial vessels, not just tank vessels, demonstrate planning for salvage response.

The regulatory assessment goes on to note that the:

> Discussion of salvage planning by non-oil carriers has only recently started, since the M/V NEW CARISSA accident and salvage in 1999 and other general cargo salvage incidents.

However, the Coast Guard did not cite the M/V NEW CARISSA incident specifically as an example for the need for this rulemaking.

R. Environment Comments

In Section VII, entitled Rulemaking Analysis and Notices, Subsection M there is a discussion of the environmental comments.

S. Tribal Consultation

In regards to protecting the rights of the Puget Sound tribes, the Coast Guard has entered into the required consultation and coordination with affected Indian tribal governments, and all State, local, and tribal governments have had an opportunity to comment on the NPRM during the public comment period, and have those comments addressed prior to issuance of a final rule. We have summarized our consultation with Indian tribal governments in Section VII, entitled Rulemaking Analysis and Notices, Subsection J of this final rule.

T. Miscellaneous

Two commenters stated that firefighting and salvage do not work on the same operational principles, and that they should be addressed differently in the rulemaking. The Coast Guard understands this position, but does not feel it is necessary to change the regulation. While there are differences in these two types of emergency responses, we recognize that in some instances both firefighting and salvage services will be provided by one resource provider. Also, marine firefighting and salvage are closely linked as a response progression, therefore we feel that a single regulation serves best to inform the industry and resource providers of the planning requirements. However, as there are different aspects of each response, separate response timetables are provided for salvage versus firefighting planning purposes.

One commenter stated that the NPRM was not very well written, adding that it essentially proposed amending existing VRP regulations, yet included them in a separate section. The Coast Guard disagrees and has determined that these regulations are necessary and fit appropriately into the current VRP regulations provided in 33 CFR part 155.

One commenter stated that the State of California should not dictate U.S. salvage and marine-firefighting response planning requirements. The commenter noted that the Coast Guard has no business imposing the same unreasonable requirements on those who elected to avoid them by not conducting business in California. The Coast Guard disagrees that these regulations, which implement requirements contained in OPA 90, are unreasonable. Further, the Coast Guard has not, at any time during this rulemaking project, set out to impose unreasonable requirements, either on our own or at the behest of one of the States. As found in the public docket, document number USCG–1998–3417–0008, the Coast Guard had requested an extension of the implementation date of California's Salvage Equipment and Service requirements (found in section 8 18.02(m) of California's Oil Spill Contingency Plan regulations (Title 14, Division 1, Subdivision 4, Chapter 3, Subchapter 3, Sections 81 5–819)) beyond September 30, 2000. We felt that such an extension would give us time to share and discuss our own proposed requirements with them. The Coast Guard is not approving California's requirements; however we are required under Executive Order 13132 to consult with the States prior to proposing regulations that might affect them. We consulted with California on an agreement on the best approach for ensuring a salvage and firefighting capability that both serves the interests of that State and the United States, and also to lessen the burden of meeting two separate regulatory requirements on industry. States have an inherent right to set vessel response planning requirements for their own waters, as long as they do not preclude compliance with Federal requirements. Since this comment came into the docket, California issued Salvage Equipment and Service requirements as part of their Oil Spill Contingency Plan regulations on October 12, 2007. For a detailed discussion of this topic, see the ''Federalism'' section below.

One comment recommended that the Coast Guard should establish Basic Ordering Agreement (BOA) or contracts with salvors and marine firefighters, and other resource providers in the same fashion it has done with spill cleanup contractors. They suggested that the Coast Guard apply the same criteria when evaluating contract services that are being required of the tank vessel industry, and that the Coast Guard perform the evaluation and contracting within the same time periods given the tank vessel industry in the proposed revision. The Coast Guard disagrees. In 1982 Congress directed the Coast Guard Commandant to:

> Review Coast Guard policies and procedures for towing and salvage of disabled vessels in order to further minimize the possibility of Coast Guard competition or interference with commercial enterprise. (Pub. L. 97–322, title I, Sec. 113, Oct. 15, 1982, 96 Stat. 1585, as amended by Pub. L. 100–448, Sec. 30(b), Sept. 28, 1988, 102 Stat. 1850)

Congress mandated the review because of concern that the Coast Guard was unnecessarily using its resources to provide non-emergency assistance for disabled vessels, which could be

adequately performed by the private sector. In addition, a key aspect of OPA 90 emphasizes the use of private over public emergency response resources. Therefore, this regulation was written to ensure that private industry have the first chance at the available contracts if possible.

One commenter stated that since Congress removed Federal agencies as firefighting resources with the Federal Fire Prevention and Control Act of 1974, the burden has fallen squarely on the shoulders of local fire departments. The Coast Guard agrees in part and hopes this regulation will relieve that burden by helping to bolster firefighting resources with private resource providers that establish new partnerships between the public and private sectors.

One commenter stated that these regulations will impose upon the industry the same burdens that were imposed for oil-spill response in regards to cost, multiple contracts, and enhanced port capabilities, and that the Coast Guard should ensure that these issues are clearly addressed in these regulations and that the Coast Guard has the tools and capability to adequately ensure that resources listed in a VRP are adequate for local ports. VRP approval is done according to certain criteria used by the Coast Guard in reviewing the submitted VRPs. Should the review process uncover deficiencies, or if a historical pattern of deficiencies are found in the resources listed in VRPs, the Coast Guard will take administrative action in accordance with §§ 155.1025(d)(1) and 155.1070(e). However, the responsibility of ensuring the adequacy of the response provider is on the planholder, based on the selection criteria found in § 155.4050.

One commenter stated that the comments found in the FOSC's report on the M/V NEW CARISSA, ''Crisis on the Coast,'' proves that a response must be centrally coordinated to be effective. The commenter added that such coordination could not be achieved within the context of the proposals contained in the NPRM. The Coast Guard disagrees. Section 155.4030(c) addresses integration into the response organization prior to an incident happening. It is the responsibility of the planholder and resource provider to ensure this is done by working with local port partners and contributing to, and exercising under, the ACP. Table 155.4040(c) references VRP submittal to the Incident Commander/Unified Command. Both of these items show there is a clear intent for central coordination and pre-planning of the response.

Six commenters stated the rule presents an incomplete and minimal approach to providing effective salvage and firefighting capability for ships in U.S. waters, that the U.S. needs a port system of maritime-firefighting capacity for the general good, and that such a national system should be developed under Federal oversight using general treasury funding. One commenter stated that the Coast Guard continues to reject a dedicated salvage fleet as a viable option to address this pressing need. The creation of a dedicated salvage fleet using Federal resources would have to come from Congress and be funded in the Federal budget. The Coast Guard has not actively rejected or endorsed a dedicated salvage fleet.

One commenter stated that the absence in the NPRM of a proposal to create a nationally coordinated system fails to recognize the jurisdictional issues inherent in a casualty on a major waterway of the United States. The Coast Guard disagrees, and points to the importance of pre-planning using cooperation of the local and surrounding port partners and creating adequate ACPs to anticipate situations where an incident might cross jurisdictional lines.

One commenter recommended that the Coast Guard eliminate the last sentence in § 155.4010, which reads:

> Salvage and marine firefighting actions can save lives, property and prevent the escalation of potential oil spills to worst case events,

as it is propaganda, and because the first sentence accurately describes the purpose of the new subpart. The Coast Guard disagrees. We consider the sentence in question to be factually correct and an accurate statement of the basis and intent of this regulation.

Three commenters stated there is a definite need for regulations giving the COTP direct oversight of VRPs. The Coast Guard disagrees. The volume of review and oversight for the VRPs will be time and labor intensive, and would create too much of an administrative burden on local COTP offices. The review and oversight will be maintained at the Commandant level in Coast Guard Headquarters, as is the existing VRP program. This will allow for a more consistent review process and application of the regulation.

One commenter suggested not listing the requirements contained in the rules separately, but rather integrating them with the existing VRP rules found elsewhere in 33 CFR part 155. In cases where this is not possible, then both the existing rules and the new rules should cross reference each other. The Coast Guard disagrees and will keep the new salvage and marine firefighting requirements in separate regulations. We cross referenced the existing regulations in Part 155 where necessary.

One commenter stated that the technical expertise to effectively deploy assets in the earliest stages of a shipboard fire is missing from the rulemaking, and that the best improvements in OPA 90 response effectiveness can be made by ensuring that capable and trusted marine-firefighting experts merge into the joint command as quickly as possible. The Coast Guard agrees in part. There may well be instances where the resource providers contracted for assessment and planning are also the resource providers for the firefighting teams and equipment, and the Coast Guard encourages both planholders and resource providers to ensure this is done when possible. Regarding the integration into the joint commands, prudence dictates that both planholders and resource providers participate in the Federal, state, and local area contingency planning prior to an incident.

One commenter stated that the new fire-detection systems, rules, and training are paying off and should be given a chance to work before the proposed firefighting rules are enacted. The Coast Guard disagrees in part. It is true that there have been some positive developments in the past regarding on board marine firefighting regulations and standards, most notably the 1995 amendments to the International Convention on Standards of Training, Certification and Watchkeeping for Seafarers (STCW). However, this rulemaking addresses a worst case discharge scenario situation, which could easily overwhelm the vessel crew's firefighting capabilities and require external response resources. For these reasons, the firefighting rules are necessary.

One commenter was unsure regarding compliance with the requirement in § 155.4040(d)(2) to ''list the pier location by facility name and city.'' They asked if that meant listing all potential locations that their entire fleet might someday visit, over the 13 COTP zones that the company operates in, in order to determine if the resource provider can reach the location in the designated timeframe. They stated that this provision would be extremely difficult to accomplish. The Coast Guard agrees reporting this level of detail will be difficult, but necessary nevertheless to verify that resources will be available. VRPs and the accompanying geographic-specific annexes are already

required to list specific information as found in § 155.1035(i). We are requiring that these annexes be updated to show the pier or city locations, and which firefighting resource providers will be contracted for responding to incidents at those locations. Section 155.1070(c)(5) has provisions for updating VRPs when necessary.

One commenter stated that unlike most areas of our nation, the lower Columbia River, which is approximately 110 miles, is protected by Mutual Aid Agreements in which all 10 of the Maritime Fire and Safety Association (MFSA) public fire agencies participate. The commenter stated that there are a number of organizations similar to MFSA throughout the country, and that the hard work and dedication these organizations have put forth must not be overlooked in the finalizing stage of these regulations. The Coast Guard agrees, and is very appreciative of the various mutual aid organizations that exist throughout the United States. We anticipate that many of these organizations will enter contractual agreements with planholders, and that more of them will be formed in additional locations to address the requirements of this regulation.

One commenter stated that there must be a mechanism in place to ensure that the VRP, and all copies of the VRP, are kept up-to-date as changes are made. The Coast Guard agrees and directs the commenter's attention to the existing requirements for any revisions to be submitted to the Coast Guard 30 days in advance of a vessel's operation in 33 CFR 155.1070(d). More information regarding this issue can be found on the Internet at the following Web site: *http://www.uscg.mil/vrp/news/submission_reminder.shtml*.

One commenter stated that if a marine-firefighting resource provider subcontracts to other qualified organizations, each subcontracted organization should also receive a copy of the VRP. The Coast Guard agrees and has added text in § 155.4035(b)(3) to reflect this change.

One commenter stated that the rules require drill participation by all of the salvage and firefighting contractors in the vessel oil contingency plans. The Coast Guard agrees, and the existing exercise requirements are found in § 155.1060. This requirement covers all vessels that are required to carry VRPs. We have also added § 155.4052 to address specific exercise requirements.

Three commenters stated that the Coast Guard will have to enforce the regulations vigorously if resource providers are to believe their investments will produce a return. They also asked how the Coast Guard will gain the confidence of resource providers, and if there will be any directive to the COTPs to insure that those who invest will get the work and those who do not will fall outside the definition of resource provider. The Coast Guard agrees and is developing guidance to the field units detailing the application and enforcement of this regulation.

U. Beyond the Scope

Two commenters addressed the fact that the NPRM failed to discuss the issue of liability for salvors, and suggested including immunity language, which states salvage and marine firefighting resources will, for the purpose of 33 U.S.C. 1321(c)(4)(a), be considered as rendering such service consistent with the National Contingency Plan. While we appreciate the points raised concerning potential liability, the issue of liability is beyond the scope of this final rule. No provision of this final rule addresses liability, either to expressly limit liability or to address immunity from liability. Among other things, determinations of liability require a fact-laden inquiry on a case-by-case basis. If an incident response is covered by the National Contingency Plan, then any liability coverages previously authorized by 33 U.S.C. 1312, and subsequent exemptions, would remain in effect.

We received many other comments concerning issues that are outside the scope of the NPRM, and as such require little or no response.

One commenter stated that much of the existing dedicated pollution response equipment is suited only for spill response and is not used except for drills and actual spills. One commenter asserted that a national system with regional/local planning requirements would resolve jurisdictional issues through the use of the existing incident command structure, where one Federal authority (presumably the Coast Guard COTP) could coordinate the local and regional response organizations under one unified command system. One commenter stated that the Coast Guard should treat identified resource shortfalls as local issues and resolve them with local resources, as the state of Washington has done. They referenced the Strait of Juan de Fuca rescue tug, which is in operation at Neah Bay, with funding for its operations provided by the Washington State legislature. One commenter stated that if a direct funding mechanism, such as user fees, were established by local and state authorities to meet the intent of these regulations, the cost and impact would be significantly greater than that proposed in these regulations, as has been documented in some of the maritime regulations of some western States. One commenter stated that §§ 155.1035(e)(6)(ii), ''Response plan requirements for manned vessels carrying oil as a primary cargo'', and § 155.1040(e)(5)(ii), ''Response plan requirements for unmanned tank barges carrying oil as a primary cargo'', need to be updated. While this comment is outside the scope of this regulatory project, we have passed it on to the appropriate office within the Coast Guard to consider as part of a separate regulatory project. One commenter stated that the conditions in 33 CFR 155 are often not met and the local, public fire departments are unaware of their role in the facility response plan.

One commenter stated that the Coast Guard should focus on ensuring adequate participation in the casualty response by the financial stakeholders, which are often the insurers of the responsible parties. The FOSC should require that all marine insurers, including hull, protection and indemnity (P&I), and pollution insurers, have an individual available to discuss coverage with the FOSC on an as needed basis. Another commenter stated that the FOSC should require that some representative of the resource provider's various marine insurers, such as a surveyor, be on scene to participate in the financial decisions made in the context of the ICS. These comments are beyond the scope of this rulemaking, as they would introduce a new aspect to the overarching incident command structure.

One commenter recommended that the Coast Guard take the lead to ensure that the firefighting sections of each ACP have been developed and tested so that initial at-pier response by public resources is assured. We will take this comment into consideration as we conduct regular reviews of ACPs.

One commenter stated that the U.S. Coast Guard's Crisis Management School should increase the time spent training the attendees in the distinctions among a resource provider's various insurance carriers because casualties usually involve multiple insurer interests. One commenter stated that they support the concept of improving and enhancing indigenous resources in each port, where possible, rather than creating a new industry. The commenter added that enhancing local firefighting capabilities will create a reasonable low-cost alternative to developing a new industry. One commenter wrote that for a number of years, tank vessels and tank barges transiting the west coast of North

America have been voluntarily participating in a traffic separation scheme whereby tank vessels transit at least 50 miles offshore, while tank barges transit 25 miles offshore. The commenter noted that if tank barges could avoid the regulatory reach of these proposed standards by transiting beyond the 50-mile limit of a certain COTP zone, they would place themselves directly in the path of the faster moving tank vessels, negating the benefits and safety features of the traffic separation scheme. One commenter stated it is essential that the Coast Guard address the status of efforts to obtain reciprocity with Canada, particularly for areas where we jointly share waterways. One commenter submitted a comment designed to correct language in a report that was neither referenced in nor relied upon for the NPRM. One commenter stated that the Coast Guard should address and develop a process to resolve possible jurisdictional conflicts between firefighters and Federal, State, and planholder responders. At the public meeting in Seattle on the NPRM, it was suggested firefighting and salvage contractors should be certified by an International Association of Classification Societies member.

These comments were found to be beyond the scope of the proposed rulemaking; therefore, we have not responded to them.

VI. Incorporation by Reference

The Director of the Federal Register has approved the material in §§ 155.4035 and 155.4050 for incorporation by reference under 5 U.S.C. 552 and 1 CFR 51. Copies of the material are available from the sources listed in those sections.

VII. Regulatory Analyses

We developed this final rule after considering numerous statutes and executive orders related to rulemaking. Below, we summarize our analysis based on 13 of these statutes or executive orders.

A. Regulatory Planning and Review (E.O. 12866)

This final rule is not a ''significant regulatory action'' under section 3(f) of Executive Order 12866, Regulatory Planning and Review. The Office of Management and Budget (OMB) has not reviewed it under that Order.

A regulatory analysis is available in the docket where indicated under the **ADDRESSES**. A summary of the analysis follows:

The Coast Guard is amending the vessel response plan salvage and marine firefighting requirements for tank vessels carrying oil or groups I through IV petroleum oil as cargo. These revisions add clarifying language to the salvage and marine firefighting services that must be identified in vessel response plans. These revisions also set new response time planning requirements for each of the required salvage and marine firefighting services. The final rule also removes the time requirement for ''heavy lift'' services and the 24-hour requirement. The changes above ensure that the appropriate salvage and marine firefighting resources are identified and available for responding to incidents up to and including the worst-case discharge scenario. Readers should refer to the ''Summary of Changes from NPRM'' section of this preamble for more information.

Since 2002, several factors have led us to reconsider the cost impacts of the rule. First, the rule requirements themselves have changed, eliminating the need for the costly staging of heavy lift equipment. In addition, the marine salvage and firefighting business practices have changed in response to market forces external to the rule. Even in the absence of the Coast Guard regulatory requirements, industry has made considerable capital investments in the equipment needed to fulfill other business opportunities and provide services through the normal course of daily business operations. As a result, salvage companies have already acquired the equipment that we had projected would need to be required to meet the revised plan requirements.

As a combined result of these changes, we now estimate that the rule will not trigger an intensive investment in capital equipment by industry. Therefore, we do not anticipate salvage and firefighting companies will incur the capital costs and associated annual costs that we previously envisioned in the proposed rule based on comments received from industry and on the state of the business environment during the past six years. Companies purchased equipment as a part of their business model in order to carry out the services they provide clients in addition to the contract work that we estimated for the proposed rule. As a result, compliance with the final rule will not require additional capital or resources to increase salvage and marine firefighting capability.

For the final rule, we added clarifying language to existing requirements of the NPRM. The most significant change in the final rule is the removal of the ''heavy lift'' response time requirement (Heavy lift means the use of a salvage crane, A-frames, hydraulic jacks, winches, or other equipment for lifting, righting, or stabilizing a vessel). This should greatly reduce the burden on industry by allowing industry to list ''estimated'' response times of heavy lift equipment rather then having to pre-stage the equipment in geographical locations to meet firm planning response times. Only an additional paperwork burden exists in the form of annual plan updates, renewals, and deficiency letters.

Initially, we believed that capital costs and other costs such as employee training and drills, employee compensation, acquisition of equipment, record creation and recordkeeping, and contract negotiations with planholders (initial and annual) incurred by the salvage and firefighting companies would be passed onto vessel planholders in the form of retainer fees or increased costs for services provided. However, based on information from industry representatives, the levying of retainer fees is not a common industry practice and is virtually nonexistent within the marine salvage and firefighting industry. Marine salvage and firefighting companies recover most, if not all, of their costs for equipment and other capital expenditures through marine related contracted work and services.

For about 797 planholders that this rule will impact, there are additional paperwork burden and costs, which require an adjustment to an existing collection of information. We estimate the total annual burden hours to increase by 19,925 hours with an associated cost of approximately $1.2 million (non-discounted). For more detail, see the ''Collection of Information'' section of this rule.

This rule provides an efficiency benefit that will result in reduced response times. Current planholders will be able to make arrangements and contract with resource providers before future events occur, therefore, reducing future response times. The rule ensures that the appropriate salvage and marine firefighting resources are identified and available for responding to incidents up to and including worst case discharges. This rule will assist in restoring maritime transportation related commerce after a navigation or security event. The rule also provides clarification to the existing requirements found at 33 CFR 155.1050 which are general and only require that a planholder identify salvage and marine firefighting resources.

Ultimately, reduced response time may result in barrels of oil not spilled after an event occurs. The Coast Guard examined spill incidents from casualty

cases for tank ships and tank barges for the period 2002–2006. This period appeared relevant for evaluation since the Coast Guard published the original VRP rule in January 1996 and since several years had elapsed since OPA 90, thus allowing time for OPA 90 related rules to have an effect on the amount of oil that was being spilled into the water from tanker incidents. We found that spill volume had decreased during this period in contrast to the years just following OPA 90. However, the Coast Guard considers this rule will assist in mitigating the impacts of future low-risk, high-consequence worst case discharges.

We consider the efficiency gains discussed above to be the primary benefit of the rule. We also present additional analysis of potential scenario-based benefits in the regulatory analysis available in the docket. We considered large spill scenarios and effectiveness factors to forecast a range of quantified benefits.

B. Small Entities

Under the Regulatory Flexibility Act (5 U.S.C. 601–612), we have considered whether this rule would have a significant economic impact on a substantial number of small entities. The term ''small entities'' comprises small businesses, not-for-profit organizations that are independently owned and operated and are not dominant in their fields, and governmental jurisdictions with populations of less than 50,000.

The Coast Guard has reviewed this final rule for its potential economic impact on small entities. Out of the estimated 797 planholders, we identified 191 entities as being small businesses. From our analysis, we believe that small businesses will not incur additional capital costs to comply with the final rule. They will incur small paperwork costs of about $1,500 annually per small business. For this reason, the Coast Guard certifies under 5 U.S.C. 605(b) that the final rule will not have a significant economic impact on a substantial number of small entities.

C. Assistance for Small Entities

Under section 213(a) of the Small Business Regulatory Enforcement Fairness Act of 1996 (Pub. L. 104–121), we offered to assist small entities in understanding the rule so that they could better evaluate its effects on them and participate in the rulemaking. If you think that this rule will affect your small business, organization, or governmental jurisdiction and you have questions concerning these provisions or options for compliance, please consult with the Coast Guard personnel listed in the **FOR FURTHER INFORMATION CONTACT** section of this rule.

Small businesses may send comments on the actions of Federal employees who enforce, or otherwise determine compliance with, Federal regulations to the Small Business and Agriculture Regulatory Enforcement Ombudsman and the Regional Small Business Regulatory Fairness Boards. The Ombudsman evaluates these actions annually and rates each agency's responsiveness to small business. If you wish to comment on actions by employees of the Coast Guard, call 1–888–REG–FAIR (1–888–734–3247). The Coast Guard will not retaliate against small entities that question or complain about this rule or any policy or action of the Coast Guard.

D. Collection of Information

This rule calls for a collection of information under the Paperwork Reduction Act of 1995 (44 U.S.C. 3501–3520). As defined in 5 CFR 1320.3(c), ''collection of information'' comprises reporting, recordkeeping, monitoring, posting, labeling, and other similar actions. The title and description of the information collections, and a description of those who must collect the information follow. The estimate covers the time for reviewing instructions, searching existing sources of data, gathering and maintaining the data needed, and completing and reviewing the collection.

This final rule modifies one existing OMB-approved collection 1625–0066 (formerly 2115–0595). A summary of the revised collection follows.

Title: Vessel and Facility Response Plans (Domestic and International), and Additional Response Requirements for Prince William Sound Alaska.

OMB Control Number: 1625–0066.

Summary of the Collection of Information: Vessel response planholders will need to collect additional information to comply with the rule for the salvage and marine firefighting requirements. This information includes:

- Name and contact information for resource providers for each vessel with appropriate equipment and resources located in each zone of operation;
- Marine firefighting pre-fire plans; and
- Certification that the responders are qualified and have given permission to be included in the VRP.

Need for Information: The information is necessary to show evidence that planholders have properly planned to mitigate oil outflow and to provide that information to the Coast Guard for its use in emergency response.

Use of Information: The Coast Guard will use this information to determine whether a vessel meets the salvage and marine firefighting requirements.

Description of the Respondents: The respondents are vessel response planholders.

Number of Respondents: The number of respondents is 797 VRP planholders.

Frequency of Response: Each respondent will update and amend their respective plan accordingly and typically on an annual basis.

Burden of Response: For this final rule, the VRP planholder hour burden is 25 hours each year. For this rule, the total hour burden is 19,925 hours each year. We also estimate that planholders will incur ongoing paperwork costs of about $1.2 million annually.

Estimate of Total Annual Burden: The existing OMB-approved total annual burden is 220,559 hours. This rule will increase that number by 19,925 hours. The estimated total annual burden is 240,484 hours.

In addition to this rulemaking, COI 1625–0066 is being revised by 2 other Coast Guard rules. These rules are—(1) Vessel and Facility Response Plans for Oil: 2003 Removal Equipment Requirements and Alternative Technology Revisions [Docket No. USCG–2001–8661; RIN 1625–AA26]; and (2) Nontank Vessel Response Plans and Other Vessel Response Plan Requirements [Docket No. USCG–2008–1070; RIN 1625–AB27]. Once these rules are finalized, the hour burden for 1625–0066 will differ from the figures noted above. See the COI preamble section of each rule for details on how the hour burden will differ.

As required by the Paperwork Reduction Act of 1995 (44 U.S.C. 3507(d)), we have submitted a copy of this rule to OMB for its review of the collection of information.

You need not respond to a collection of information unless it displays a currently valid control number from OMB. Before the requirements for this collection of information become effective, we will publish notice in the **Federal Register** of OMB's decision to approve, modify, or disapprove the collection.

E. Federalism (E.O. 13132)

A rule has implications for federalism under Executive Order 13132, Federalism, if it has a substantial direct effect on State or local governments and would either preempt State law or impose a substantial direct cost of compliance on them. It is well settled that States may not regulate in

categories reserved for regulation by the Coast Guard. It is also well settled, now, that all of the categories covered in 46 U.S.C. 3306, 3703, 7101, or 8101 (design, construction, alteration, repair, maintenance, operation, equipping, personnel qualification, and manning of vessels), as well as the reporting of casualties and any other category in which Congress intended the Coast Guard to be the sole source of a vessel's obligations, are within the field foreclosed from regulation by the States. (See the decision of the Supreme Court in the consolidated cases of *United States* v. *Locke* and *Intertanko* v. *Locke*, 529 U.S. 89, 120 S.Ct. 1135 (March 6, 2000).)

This regulation covers vessel response plans for salvage and marine firefighting resources, aimed at reducing cargo loss should a marine casualty occur. As discussed in the Background and Purpose section of the NPRM published on May 10, 2002 (67 FR 31868), the Coast Guard consulted with State agencies such as the California Office of Spill Prevention and Response to ensure these regulations will not interfere with or preempt State regulations on the same subject. While several State agencies submitted comments on the NPRM, we have not consulted with these States since the publication of the NPRM. After reviewing these comments, we have determined that these regulations will not interfere with or preempt existing State regulations on the same subject.

F. Unfunded Mandates Reform Act

The Unfunded Mandates Reform Act of 1995 (2 U.S.C. 1531–1538) requires Federal agencies to assess the effects of their discretionary regulatory actions. In particular, the Act addresses actions that may result in the expenditure by a State, local, or tribal government, in the aggregate, or by the private sector of $100,000,000 or more in any one year. Though this rule will not result in such an expenditure, we do discuss the effects of this rule elsewhere in this preamble.

The legal authority for this rulemaking is provided by the Oil Pollution Act of 1990 (OPA 90). Response plans are required by the Federal Water Pollution Control Act (33 U.S.C. 1321(j)(5), as amended by Section 4202(a) of OPA 90).

This rule will not result in expenditures by State, local, or tribal governments because public vessels are exempt from the requirements of this rulemaking. The Assessment section above provides an overview of this rulemaking and its costs and benefits. A more detailed discussion of costs and benefits can be found in the Regulatory Assessment for this rule, which is available in the docket where indicated under **ADDRESSES**. The Regulatory Assessment also describes alternatives to this rule, which are contained in the Final Regulatory Flexibility Act Analysis.

G. Taking of Private Property

This rule would not effect a taking of private property or otherwise have taking implications under Executive Order 12630, Governmental Actions and Interference With Constitutionally Protected Property Rights.

H. Civil Justice Reform

This rule meets applicable standards in sections 3(a) and 3(b)(2) of Executive Order 12988, Civil Justice Reform, to minimize litigation, eliminate ambiguity, and reduce burden.

I. Protection of Children

We have analyzed this rule under Executive Order 13045, Protection of Children from Environmental Health Risks and Safety Risks. This rule is not an economically significant rule and does not create an environmental risk to health or risk to safety that may disproportionately affect children.

J. Indian Tribal Governments

We have reviewed this rule under Executive Order 13175, Consultation and Coordination with Indian Tribal Governments. Rulemakings that are determined to have ''tribal implications'' under that Order (i.e., have a substantial direct effect on one or more Indian tribes, on the relationship between the Federal Government and Indian tribes, or on the distribution of power and responsibilities between the Federal Government and Indian tribes) require the preparation of a tribal summary impact statement. As discussed below, the Coast Guard finds that this rule would not have implications of the kind envisioned under the Order, because it would not impose substantial direct compliance costs on tribal governments, preempt tribal law, or substantially affect lands or rights held exclusively by, or on behalf of, those governments.

Following the publication of the NPRM in May of 2002 and a subsequent notice of availability of the draft Programmatic Environmental Assessment in January 2006, we received two comment letters from the Makah Tribal Council of Neah Bay, WA. To address their concerns, we met with representatives of the Tribal Council in June and November of 2006. The meetings were intended to more fully explain the purpose of the rulemaking and to discuss what implications it would have on their Tribal concerns. Meeting summaries can be found in the public docket as indicated under **ADDRESSES**. The Coast Guard does not foresee that this rule would compel the tribes to significantly alter their current fishery. Furthermore, it would provide some benefits by increasing the amount of salvage and marine firefighting resources in the vicinity of their traditional tribal grounds. We do not anticipate any additional economic cost to the tribe. For these reasons, we have determined that this rule would not have ''tribal implications'' under the Executive Order, and does not require a tribal summary impact statement.

K. Energy Effects

We have analyzed this rule under Executive Order 13211, Actions Concerning Regulations That Significantly Affect Energy Supply, Distribution, or Use. We have determined that it is not a ''significant energy action'' under that order because it is not a ''significant regulatory action'' under Executive Order 12866 and it is not likely to have a significant adverse effect on the supply, distribution, or use of energy. The Administrator of the Office of Information and Regulatory Affairs has not designated it as a significant energy action. Therefore, it does not require a Statement of Energy Effects under Executive Order 13211.

L. Technical Standards

The National Technology Transfer and Advancement Act (NTTAA) (15 U.S.C. 272 note) directs agencies to use voluntary consensus standards in their regulatory activities unless the agency provides Congress, through the Office of Management and Budget, with an explanation of why using these standards would be inconsistent with applicable law or otherwise impractical. Voluntary consensus standards are technical standards (e.g., specifications of materials, performance, design, or operation; test methods; sampling procedures; and related management systems practices) that are developed or adopted by voluntary consensus standards bodies.

This rule uses the following National Fire Protection Association (NFPA) voluntary consensus standards:

- NFPA 1001, Standard for Fire Fighter Professional Qualifications, 2008 Edition
- NFPA 1005, Standard for Professional Qualifications for Marine Fire Fighting for Land-Based Fire Fighters, 2007 Edition

• NFPA 1021, Standard for Fire Officer Professional Qualifications, 2003 Edition

• NFPA 1405, Guide for Land-Based Fire Fighters Who Respond to Marine Vessel Fires, 2006 Edition

• NFPA 1561, Standard on Emergency Services Incident Management System, 2008 Edition

The sections that reference these standards and the locations where these standards are available are listed in 33 CFR 155.140.

M. Environment

We have analyzed this rule under Department of Homeland Security Management Directive 0023.1 and Commandant Instruction M16475.lD, which guide the Coast Guard in complying with the National Environmental Policy Act of 1969 (NEPA) (42 U.S.C. 4321–4370f), and have concluded under the Instruction that preparation of an Environmental Impact Statement is not necessary. A final Programmatic Environmental Assessment (PEA) and a final ''Finding of No Significant Impact'' (FONSI) are available in the docket where indicated under **ADDRESSES**. An overview of the NEPA steps taken for this rule follows.

The Coast Guard considered the environmental impact of vessel response plans as a whole during an April 1992 Environmental Assessment (EA), and a November 1992 Supplemental Statement, resulting in a FONSI [see Vessel Response Plans rulemaking; CGD 91–034; 58 FR 7376; February 3, 1993]. For this rulemaking, we initially relied on that 1992 EA as the salvage and marine firefighting requirements are two of many required vessel response plan elements. Following publication of the NPRM we received comments on the age of the original analysis, as well as the need to address the use of different types of fire fighting foam. A PEA was drafted, solely for these salvage and marine firefighting revisions, to address these comments. A Notice of Availability for the draft PEA was published in the **Federal Register** on January 3, 2006 [71 FR 125] and the public comments received in response to it are addressed in the final PEA. The PEA only updates a small portion of the scope of the 1992 EA; specifically, the salvage and marine firefighting identification and response time requirements in VRPs for commercial tank vessels carrying groups I through IV petroleum oil as a primary cargo. The 1992 EA and FONSI, the updated draft PEA and the final 2008 PEA and FONSI are available in the docket for inspection or copying where indicated under **ADDRESSES**.

List of Subjects for 33 CFR Part 155

Alaska, Hazardous substances, Incorporation by reference, Oil pollution, Reporting and recordkeeping requirements.

■ For the reasons discussed in the preamble, the Coast Guard amends 33 CFR part 155 as follows:

PART 155—OIL OR HAZARDOUS MATERIAL POLLUTION PREVENTION REGULATIONS FOR VESSELS

■ 1. The authority citation for part 155 continues to read as follows:

Authority: 33 U.S.C. 1231, 1321(j); E.O. 11735, 3 CFR, 1971–1975 Comp., p. 793. Sections 155.100 through 155.130, 150.350 through 155.400, 155.430, 155.440, 155.470, 155.1030(j) and (k), and 155.1065(g) are also issued under 33 U.S.C. 1903(b). Sections 155.480, 155.490, 155.750(e), and 155.775 are also issued under 46 U.S.C. 3703. Section 155.490 also issued under section 4110(b) of Pub. L. 101–380.

Note: Additional requirements for vessels carrying oil or hazardous materials are contained in 46 CFR parts 30 through 40, 150, 151, and 153.

■ 2. Add a note following § 155.130 to read as follows:

§ 155.130 Exemptions.

* * * * *

Note to § 155.130: Additional exemptions/temporary waivers related to *salvage* and *marine firefighting* requirements can be found in § 155.4055.

■ 3. Revise § 155.140 to read as follows:

§ 155.140 Incorporation by reference.

(a) Certain material is incorporated by reference into this part with the approval of the Director of the Federal Register under 5 U.S.C. 552(a) and 1 CFR part 51. To enforce any edition other than that specified in this section, the Coast Guard must publish notice of change in the **Federal Register** and the material must be available to the public. All approved material is available for inspection at the National Archives and Records Administration (NARA). For information on the availability of this material at NARA, call 202–741–6030 or go to *http://www.archives.gov/federal_register/code_of_federal_regulations/ibr_locations.html.* Also, it is available for inspection at the Coast Guard, Office of Vessel Activities, 2100 Second Street, SW., Washington, DC 20593–0001. Approved material is available from the sources indicated in this section.

(b) *American National Standards Institute, Inc. (ANSI),* 25 West 43rd Street, New York, NY 10036, 212–642–4980, *http://www.ansi.org/:*

(1) ANSI A10.14, Requirements for Safety Belts, Harnesses, Lanyards and Lifelines for Construction and Demolition Use, 1991 (''ANSI A10.14''), incorporation by reference approved for § 155.230.

(2) [Reserved]

(c) *American Society for Testing and Materials (ASTM)*, 100 Barr Harbor Drive, West Conshohocken, PA 19428–2959, 610–832–9585, *http://www.astm.org/:*

(1) ASTM F 631–93, Standard Guide for Collecting Skimmer Performance Data in Controlled Environments (''ASTM F 631–93''), incorporation by reference approved for Appendix B.

(2) ASTM F 715–95, Standard Test Methods for Coated Fabrics Used for Oil Spill Control and Storage (''ASTM F 715–95''), incorporation by reference approved for in Appendix B.

(3) ASTM F 722–82 (1993), Standard Specification for Welded Joints for Shipboard Piping Systems (''ASTM F 722–82''), incorporation by reference approved for Appendix A and Appendix B.

(d) *International Maritime Organization (IMO)*, 4 Albert Embankment, London SE1 7SR, United Kingdom, *http://www.imo.org/:*

(1) Resolution A.535(13), Recommendations on Emergency Towing Requirements for Tankers, November 17, 1983 (''Resolution A.535(13)''), incorporation by reference approved for § 155.235.

(2) Resolution MSC.35(63), Adoption of Guidelines for Emergency Towing Arrangement on Tankers, May 20, 1994 (''Resolution MSC.35(63)''), incorporation by reference approved for § 155.235.

(e) *National Fire Protection Association (NFPA)*, 1 Batterymarch Park, Quincy, MA 02269–7471, 617–770–3000, *http://www.nfpa.org/:*

(1) NFPA 1001, Standard for Fire Fighter Professional Qualifications, 2008 Edition (''NFPA 1001''), incorporation by reference approved for § 155.4050.

(2) NFPA 1005, Standard for Professional Qualifications for Marine Fire Fighting for Land-Based Fire Fighters, 2007 Edition (''NFPA 1005''), incorporation by reference approved for § 155.4050.

(3) NFPA 1021, Standard for Fire Officer Professional Qualifications, 2003 Edition (''NFPA 1021''), incorporation by reference approved for § 155.4050.

(4) NFPA 1405, Guide for Land-Based Fire Fighters Who Respond to Marine Vessel Fires, 2006 Edition (''NFPA 1405''), incorporation by reference approved for §§ 155.4035 and 155.4050.

(5) NFPA 1561, Standard on Emergency Services Incident Management System, 2008 Edition (''NFPA 1561''), incorporation by reference approved for § 155.4050.

(f) *Oil Companies International Marine Forum (OCIMF)*, 29 Queen Anne's Gate, London, SW1H 9BU England, *http://www.ocimf.com/:*

(1) Ship to Ship Transfer Guide (Petroleum), Second Edition, 1988, incorporation by reference approved for § 155.1035.

(2) Reserved.

■ 4. In § 155.1020, revise the definition of ''Oil Spill Removal Organization'' to read as follows:

§ 155.1020 Definitions.

* * * * *

Oil spill removal organization (OSRO) means an entity that provides oil spill response resources.

* * * * *

■ 5. Amend § 155.1050 by:

■ (a) Revising paragraph (k); and

■ (b) Removing and reserving existing paragraph (l):

§ 155.1050 Response plan development and evaluation criteria for vessels carrying groups I through IV petroleum oil as a primary cargo.

* * * * *

(k) *Salvage* (including lightering) and *marine firefighting* requirements are found in subpart I of this part.

(l) [Reserved]

* * * * *

■ 6. Reserve subpart H and add subpart I, consisting of § 155.4010 through § 155.4055, to read as follows:

Subpart I—Salvage and Marine Firefighting

Sec.

155.4010 Purpose of this subpart.
155.4015 Vessel owners and operators covered by this subpart.
155.4020 Complying with this subpart.
155.4025 Definitions.
155.4030 Required salvage and marine firefighting services to list in response plans.
155.4032 Other resource provider considerations.
155.4035 Required pre-incident information and arrangements for the salvage and marine firefighting resource providers listed in response plans.
155.4040 Response times for each salvage and marine firefighting service.
155.4045 Required agreements or contracts with the salvage and marine firefighting resource providers.
155.4050 Ensuring that the salvors and marine firefighters are adequate.
155.4052 Drills and exercises.
155.4055 Temporary waivers from meeting one or more of the specified response times.

Subpart I—Salvage and Marine Firefighting

§ 155.4010 Purpose of this subpart.

(a) The purpose of this subpart is to establish vessel response plan *salvage* and *marine firefighting* requirements for vessels, that are carrying group I–IV oils, and that are required by § 155.1015 to have a vessel response plan. *Salvage* and *marine firefighting* actions can save lives, property, and prevent the escalation of potential oil spills to worst case discharge scenarios.

(b) A planholder must ensure by *contract or other approved means* that response resources are available to respond. However, the response criteria specified in the regulations (e.g., quantities of response resources and their arrival times) are planning criteria, not performance standards, and are based on assumptions that may not exist during an actual incident, as stated in 33 CFR 155.1010. Compliance with the regulations is based upon whether a covered response plan ensures that adequate response resources are available, not on whether the actual performance of those response resources after an incident meets specified arrival times or other planning criteria. Failure to meet specified criteria during an actual spill response does not necessarily mean that the planning requirements of the Federal Water Pollution Control Act (FWPCA) (33 U.S.C. 1251–1376) and regulations were not met. The Coast Guard will exercise its enforcement discretion in light of all facts and circumstances.

§ 155.4015 Vessel owners and operators who must follow this subpart.

You must follow this subpart if your vessel carries group I–IV oils, and is required by § 155.1015 to have a vessel response plan.

§ 155.4020 Complying with this subpart.

(a) If you have an existing approved vessel response plan, you must have your vessel response plan updated and submitted to the Coast Guard by June 1, 2010.

(b) All new or existing vessels operating on the navigable waters of the United States or transferring oil in a port or place subject to the jurisdiction of the United States, that meet the applicability requirements of § 155.1015, that do not have an approved vessel response plan, must comply with § 155.1065.

(c) Your vessel may not conduct oil transport or transfer operations if—

(1) You have not submitted a plan to the Coast Guard in accordance with § 155.1065 prior to June 1, 2010;

(2) The Coast Guard determines that the response resources referenced in your plan do not meet the requirements of this subpart;

(3) The contracts or agreements cited in your plan have lapsed or are otherwise no longer valid;

(4) You are not operating in accordance with your plan; or

(5) The plan's approval has expired.

§ 155.4025 Definitions.

For the purposes of this subpart, the following definitions apply:

Assessment of structural stability means completion of a vessel's stability and structural integrity assessment through the use of a salvage software program. The data used for the calculations would include information collected by the on-scene salvage professional. The assessment is intended to allow sound decisions to be made for subsequent salvage efforts. In addition, the assessment must be consistent with the conditions set forth in 33 CFR 155.240 and 155.245, as applicable.

Boundary lines are lines drawn following the general trend of the seaward, highwater shorelines and lines continuing the general trend of the seaward, highwater shorelines across entrances to small bays, inlets and rivers as defined in 46 CFR 7.5(c).

Captain of the Port (COTP) city means the city which is the geographical location of the COTP office. COTP city locations are listed in 33 CFR part 3.

Continental United States (CONUS) means the contiguous 48 States and the District of Columbia.

Contract or other approved means is any one of the following:

(1)(i) A written contractual agreement between a vessel owner or operator and resource provider. This agreement must expressly provide that the resource provider is capable of, and intends to commit to, meeting the plan requirements.

(ii) A written certification that the personnel, equipment, and capabilities required by this subpart are available and under the vessel owner or operator's direct control. If the planholder has personnel, equipment and capabilities under their direct control, they need not contract those items with a resource provider.

(iii) An alternative approved by the Coast Guard (Commandant, Director of Prevention Policy (CG–54)) and submitted in accordance with 33 CFR 155.1065(f).

(2) As part of the contract or other approved means you must develop and sign, with your resource provider, a written funding agreement. This

funding agreement is to ensure that salvage and marine firefighting responses are not delayed due to funding negotiations. The funding agreement must include a statement of how long the agreement remains in effect, and must be provided to the Coast Guard for VRP approval. In addition any written agreement with a public resource provider must be included in the planholder's Vessel Response Plan (VRP).

Diving services support means divers and their equipment to support salvage operations. This support may include, but not be limited to, underwater repairs, welding, placing lifting slings, or performing damage assessments.

Emergency lightering is the process of transferring oil between two ships or other floating or land-based receptacles in an emergency situation and may require pumping equipment, transfer hoses, fenders, portable barges, shore based portable tanks, or other equipment that circumstances may dictate.

Emergency towing, also referred to as rescue towing, means the use of towing vessels that can pull, push or make-up alongside a vessel. This is to ensure that a vessel can be stabilized, controlled or removed from a grounded position. Towing vessels must have the proper horsepower or bollard pull compatible with the size and tonnage of the vessel to be assisted.

External emergency transfer operations means the use of external pumping equipment placed on board a vessel to move oil from one tank to another, when the vessel's own transfer equipment is not working.

External firefighting teams means trained firefighting personnel, aside from the crew, with the capability of boarding and combating a fire on a vessel.

External vessel firefighting systems mean firefighting resources (personnel and equipment) that are capable of combating a fire from other than on board the vessel. These resources include, but are not limited to, fire tugs, portable fire pumps, airplanes, helicopters, or shore side fire trucks.

Funding agreement is a written agreement between a resource provider and a planholder that identifies agreed upon rates for specific equipment and services to be made available by the resource provider under the agreement. The funding agreement is to ensure that salvage and marine firefighting responses are not delayed due to funding negotiations. This agreement must be part of the contract or other approved means and must be submitted for review along with the VRP.

Great Lakes means Lakes Superior, Michigan, Huron, Erie, and Ontario, their connecting and tributary waters, the Saint Lawrence River as far as Saint Regis, and adjacent port areas.

Heavy lift means the use of a salvage crane, A-frames, hydraulic jacks, winches, or other equipment for lifting, righting, or stabilizing a vessel.

Inland area means the area shoreward of the boundary lines defined in 46 CFR part 7, except that in the Gulf of Mexico, it means the area shoreward of the lines of demarcation (COLREG lines) as defined in §§ 80.740 through 80.850 of this chapter. The inland area does not include the Great Lakes.

Making temporary repairs means action to temporarily repair a vessel to enable it to safely move to a shipyard or other location for permanent repairs. These services include, but are not limited to, shoring, patching, drill stopping, or structural reinforcement.

Marine firefighting means any firefighting related act undertaken to assist a vessel with a potential or actual fire, to prevent loss of life, damage or destruction of the vessel, or damage to the marine environment.

Marine firefighting pre-fire plan means a plan that outlines the responsibilities and actions during a marine fire incident. The principle purpose is to explain the resource provider's role, and the support which can be provided, during marine firefighting incidents. Policies, responsibilities and procedures for coordination of on-scene forces are provided in the plan. It should be designed for use in conjunction with other state, regional and local contingency and resource mobilization plans.

Nearshore area means the area extending seaward 12 miles from the boundary lines defined in 46 CFR part 7, except in the Gulf of Mexico. In the Gulf of Mexico, a nearshore area is one extending seaward 12 miles from the line of demarcation (COLREG lines) as defined in §§ 80.740 through 80.850 of this chapter.

Offshore area means the area up to 38 nautical miles seaward of the outer boundary of the nearshore area.

On-site fire assessment means that a marine firefighting professional is on scene, at a safe distance from the vessel or on the vessel, who can determine the steps needed to control and extinguish a marine fire in accordance with a vessel's stability and structural integrity assessment if necessary.

On-site salvage assessment means that a salvage professional is on scene, at a safe distance from the vessel or on the vessel, who has the ability to assess the vessel's stability and structural integrity. The data collected during this assessment will be used in the salvage software calculations and to determine necessary steps to salve the vessel.

Other refloating methods means those techniques for refloating a vessel aside from using pumps. These services include, but are not limited to, the use of pontoons, air bags or compressed air.

Outside continental United States (OCONUS) means Alaska, Hawaii, the Commonwealth of Puerto Rico, Guam, American Samoa, the United States Virgin Islands, the Commonwealth of the Northern Marianas, and any other territory or possession of the United States.

Primary resource provider means a resource provider listed in the vessel response plan as the principal entity contracted for providing specific salvage and/or marine firefighting services and resources, when multiple resource providers are listed for that service, for each of the COTP zones in which a vessel operates. The primary resource provider will be the point of contact for the planholder, the Federal On Scene Coordinator (FOSC) and the Unified Command, in matters related to specific resources and services, as required in § 155.4030(a).

Remote assessment and consultation means contacting the salvage and/or marine firefighting resource providers, by phone or other means of communications to discuss and assess the situation. The person contacted must be competent to consult on a determination of the appropriate course of action and initiation of a response plan.

Resource provider means an entity that provides personnel, equipment, supplies, and other capabilities necessary to perform salvage and/or marine firefighting services identified in the response plan, and has been arranged by contract or other approved means. The resource provider must be selected in accordance with § 155.4050. For marine firefighting services, resource providers can include public firefighting resources as long as they are able, in accordance with the requirements of § 155.4045(d), and willing to provide the services needed.

Salvage means any act undertaken to assist a vessel in potential or actual danger, to prevent loss of life, damage or destruction of the vessel and release of its contents into the marine environment.

Salvage plan means a plan developed to guide salvage operations except those identified as specialized salvage operations.

Special salvage operations plan means a salvage plan developed to carry out a specialized salvage operation, including heavy lift and/or subsurface product removal.

Subsurface product removal means the safe removal of oil from a vessel that has sunk or is partially submerged underwater. These actions can include pumping or other means to transfer the oil to a storage device.

Underwater vessel and bottom survey means having salvage resources on scene that can perform examination and analysis of the vessel's hull and equipment below the water surface. These resources also include the ability to determine the bottom configuration and type for the body of water. This service can be accomplished through the use of equipment such as sonar, magnetometers, remotely operated vehicles or divers. When divers are used to perform these services, the time requirements for this service apply and not those of diving services support.

§ 155.4030 Required salvage and marine firefighting services to list in response plans.

(a) You must identify, in the geographical-specific appendices of your VRP, the *salvage* and *marine firefighting* services listed in Table 155.4030(b)—Salvage and Marine Firefighting Services and Response Timeframes. Additionally, you must list those *resource providers* that you have contracted to provide these services. You may list multiple *resource providers* for each service, but you must identify which one is your primary *resource provider* for each Captain of the Port (COTP) zone in which you operate. A method of contact, consistent with the requirements in §§ 155.1035(e)(6)(ii) and 155.1040(e)(5)(ii), must also be listed, in the geographical-specific appendices of your VRP, adjacent to the name of the *resource provider.*

(b) Table 155.4030(b) lists the required *salvage* and *marine firefighting* services and response timeframes.

TABLE 155.4030(b)—SALVAGE AND MARINE FIREFIGHTING SERVICES AND RESPONSE TIMEFRAMES

Service		Location of incident response activity timeframe	
(1) Salvage		CONUS: nearshore area; inland waters; Great Lakes; and OCONUS: < or = 12 miles from COTP city (hours)	CONUS: offshore area; and OCONUS: < or = 50 miles from COTP city (hours)
(i) *Assessment & Survey:*			
(A) Remote assessment and consultation		1	1
(B) Begin assessment of structural stability		3	3
(C) On-site salvage assessment		6	12
(D) Assessment of structural stability		12	18
(E) Hull and bottom survey		12	18
(ii) *Stabilization:*			
(A) Emergency towing		12	18
(B) Salvage plan		16	22
(C) External emergency transfer operations		18	24
(D) Emergency lightering		18	24
(E) Other refloating methods		18	24
(F) Making temporary repairs		18	24
(G) Diving services support		18	24
(iii) *Specialized Salvage Operations:*			
(A) Special salvage operations plan		18	24
(B) Subsurface product removal		72	84
(C) Heavy lift [1]		Estimated	Estimated
(2) Marine firefighting	At pier (hours)	CONUS: Nearshore area; inland waters; Great Lakes; and OCONUS: < or = 12 miles from COTP city (hours)	*COM041*CONUS: Offshore area; and OCONUS: < or = 50 miles from COTP city (hours)
(i) *Assessment & Planning:*			
(A) Remote assessment and consultation	1	1	1
(B) On-site fire assessment	2	6	12
(ii) *Fire Suppression:*			
(A) External firefighting teams	4	8	12
(B) External vessel firefighting systems	4	12	18

[1] Heavy lift services are not required to have definite hours for a response time. The planholder must still contract for heavy lift services, provide a description of the heavy lift response and an estimated response time when these services are required, however, none of the timeframes listed in the table in § 155.4030(b) will apply to these services.

(c) *Integration into the response organization.* You must ensure that all *salvage* and *marine firefighting resource providers* are integrated into the response organizations listed in your plans. The response organization must be consistent with the requirements set forth in §§ 155.1035(d), 155.1040(d) and 155.1045(d).

(d) *Coordination with other response resource providers, response organizations and OSROs.* Your plan must include provisions on how the salvage and marine firefighting resource providers will coordinate with other response resources, response organizations, and OSROs. For example, you will need to identify how salvage

and marine firefighting assessment personnel will coordinate response activity with oil spill removal organizations. For services that, by law, require public assistance, there must be clear guidelines on how service providers will interact with those organizations. The information contained in the response plan must be consistent with applicable Area Contingency Plans (ACPs) and the National Oil and Hazardous Substances Pollution Contingency Plan as found in § 155.1030(h).

(e) *Ensuring the proper emergency towing vessels are listed in your VRP.* Your VRP must identify towing vessels with the proper characteristics, horsepower, and bollard pull to tow your vessel(s). These towing vessels must be capable of operating in environments where the winds are up to 40 knots.

(f) *Ensuring the proper type and amount of transfer equipment is listed in your VRP.* Your salvage resource provider must be able to bring on scene a pumping capability that can offload the vessel's largest cargo tank in 24 hours of continuous operation. This is required for both emergency transfer and lightering operations.

(g) *Ensuring firefighting equipment is compatible with your vessel.* Your plan must list the proper type and amount of extinguishing agent needed to combat a fire involving your vessel's cargo, other contents, and superstructure. If your primary extinguishing agent is foam or water, you must identify resources in your plan that are able to pump, for a minimum of 20 minutes, at least 0.16 gallons per minute per square foot of the deck area of your vessel, or an appropriate rate for spaces that this rate is not suitable for and if needed, an adequate source of foam. These resources described are to be supplied by the resource provider, external to the vessel's own firefighting system.

(h) *Ensuring the proper subsurface product removal.* You must have subsurface product removal capability if your vessel(s) operates in waters of 40 feet or more. Your resource provider must have the capability of removing cargo and fuel from your sunken vessel to a depth equal to the maximum your vessel operates in up to 150 feet.

§ 155.4032 Other resource provider considerations.

(a) *Use of resource providers not listed in the VRP.* If another resource provider, not listed in the approved plan for the specific service required, is to be contracted for a specific response, justification for the selection of that resource provider needs to be provided to, and approved by, the FOSC. Only under exceptional circumstances will the FOSC authorize deviation from the resource provider listed in the approved vessel response plan in instances where that would best affect a more successful response.

(b) *Worker health and safety.* Your resource providers must have the capability to implement the necessary engineering, administrative, and personal protective equipment controls to safeguard their workers when providing salvage and marine firefighting services, as found in 33 CFR 155.1055(e) and 29 CFR 1910.120(q).

§ 155.4035 Required pre-incident information and arrangements for the salvage and marine firefighting resource providers listed in response plans.

(a) You must provide the information listed in §§ 155.1035(c) and 155.1040(c) to your salvage and marine firefighting resource providers.

(b) *Marine firefighting pre-fire plan.*

(1) You must prepare a vessel pre-fire plan in accordance with NFPA 1405, Guide for Land-Based Firefighters Who Respond to Marine Vessel Fires, Chapter 9 (Incorporation by reference, see § 155.140). If the planholder's vessel pre-fire plan is one that meets another regulation or international standard such as International Convention for the Safety of Life At Sea (SOLAS), a copy of that specific fire plan must also be given to the resource provider(s) and be attached to the VRP.

(2) The marine firefighting resource provider(s) you are required to identify in your plan must be given a copy of the plan. Additionally, they must certify in writing to you that they find the plan acceptable and agree to implement it to mitigate a potential or actual fire.

(3) If a marine firefighting resource provider subcontracts to other organizations, each subcontracted organization must also receive a copy of the vessel pre-fire plan.

§ 155.4040 Response times for each salvage and marine firefighting service.

(a) You must ensure, by contract or other approved means, that your resource provider(s) is capable of providing the services within the required timeframes.

(1) If your vessel is at the pier or transiting a COTP zone within the continental United States (CONUS), the timeframes in Table 155.4030(b) apply as listed.

(2) If your vessel is at the pier or transiting a COTP zone outside the continental United States (OCONUS), the timeframes in Table 155.4030(b) apply as follows:

(i) Inland waters and nearshore area timeframes apply from the COTP city out to and including the 12 mile point.

(ii) Offshore area timeframes apply from 12 to 50 miles outside the COTP city.

(3) If your vessel transits within an OCONUS COTP zone that is outside the areas described in paragraph (a)(2) of this section, but within the inland waters or the nearshore or offshore area, you must submit in writing, in your plan, the steps you will take to address salvage and marine firefighting needs in the event these services are required.

(b) The timeframe starts when anyone in your response organization receives notification of a potential or actual incident. It ends when the service reaches the ship, the outer limit of the nearshore area, the outer limit of the offshore area, the 12 or 50-mile point from the COTP city, or a point identified in your response plan for areas OCONUS.

(c) Table 155.4040(c) provides additional amplifying information for vessels transiting within the nearshore and offshore areas of CONUS or within 50 miles of an OCONUS COTP city.

TABLE 155.4040(c)—RESPONSE TIMEFRAME END POINTS

Service	Response timeframe ends when
(1) Salvage:	
(i) Remote assessment and consultation	Salvor is in voice contact with Qualified Individual (QI)/Master/Operator.
(ii) Begin assessment of structural stability	A structural assessment of the vessel has been initiated.
(iii) On-site salvage assessment	Salvor on board vessel.
(iv) Assessment of structural stability	Initial analysis is completed. This is a continual process, but at the time specified an analysis needs to be completed.
(v) Hull and bottom survey	Survey completed.
(vi) Emergency towing	Towing vessel on scene.
vii) Salvage plan	Plan completed and submitted to Incident Commander/Unified Command.

TABLE 155.4040(c)—RESPONSE TIMEFRAME END POINTS—Continued

Service	Response timeframe ends when
(viii) External emergency transfer operations.	External pumps on board vessel.
(ix) Emergency lightering	Lightering equipment on scene and alongside.
(x) Other refloating methods	Salvage plan approved & resources on vessel.
(xi) Making temporary repairs	Repair equipment on board vessel.
(xii) Diving services support	Required support equipment & personnel on scene.
(xiii) Special salvage operations plan	Plan completed and submitted to Incident Commander/Unified Command.
(xiv) Subsurface product removal	Resources on scene.
(xv) Heavy lift [1]	Estimated.
(2) Marine Firefighting:	
(i) Remote assessment and consultation	Firefighter in voice contact with QI/Master/Operator.
(ii) On-site fire assessment	Firefighter representative on site.
(iii) External firefighting teams	Team and equipment on scene.
(iv) External vessel firefighting systems	Personnel and equipment on scene.

[1] Heavy lift services are not required to have definite hours for a response time. The planholder must still contract for heavy lift services, provide a description of the heavy lift response and an estimated response time when these services are required, however, none of the timeframes listed in the table in § 155.4030(b) will apply to these services.

(d) *How to apply the timeframes to your particular situation*. To apply the timeframes to your vessel's situation, follow these procedures:

(1) Identify if your vessel operates CONUS or OCONUS.

(2) If your vessel is calling at any CONUS pier or an OCONUS pier within 50 miles of a COTP city, you must list the pier location by facility name or city and ensure that the marine firefighting resource provider can reach the locations within the specified response times in Table 155.4030(b).

(3) If your vessel is transiting within CONUS inland waters, nearshore or offshore areas or the Great Lakes, you must ensure the listed salvage and marine firefighting services are capable of reaching your vessel within the appropriate response times listed in Table 155.4030(b).

(4) If your vessel is transiting within 12 miles or less from an OCONUS COTP city, you must ensure the listed salvage and marine firefighting services are capable of reaching a point 12 miles from the harbor of the COTP city within the nearshore area response times listed in Table 155.4030(b).

(5) If your vessel is transiting between 12 and 50 miles from an OCONUS COTP city, you must ensure the listed salvage and marine firefighting services are capable of reaching a point 50 miles from the harbor of the COTP city within the offshore area response times listed in Table 155.4030(b).

(6) If your vessel transits inland waters or the nearshore or offshore areas OCONUS, but is more than 50 miles from a COTP city, you must still contract for salvage and marine firefighting services and provide a description of how you intend to respond and an estimated response time when these services are required, however, none of the time limits listed in Table 155.4030(b) will apply to these services.

§ 155.4045 Required agreements or contracts with the salvage and marine firefighting resource providers.

(a) You may only list resource providers in your plan that have been arranged by contract or other approved means.

(b) You must obtain written consent from the resource provider stating that they agree to be listed in your plan. This consent must state that the resource provider agrees to provide the services that are listed in §§ 155.4030(a) through 155.4030(h), and that these services are capable of arriving within the response times listed in Table 155.4030(b). This consent may be included in the contract with the resource provider or in a separate document.

(c) This written consent must be available to the Coast Guard for inspection. The response plan must identify the location of this written consent, which must be:

(1) On board the vessel; or

(2) With a qualified individual located in the United States.

(d) Public marine firefighters may only be listed out to the maximum extent of the public resource's jurisdiction, unless other agreements are in place. A public marine firefighting resource may agree to respond beyond their jurisdictional limits, but the Coast Guard considers it unreasonable to expect public marine firefighting resources to do this.

§ 155.4050 Ensuring that the salvors and marine firefighters are adequate.

(a) You are responsible for determining the adequacy of the resource providers you intend to include in your plan.

(b) When determining adequacy of the resource provider, you must select a resource provider that meets the following selection criteria to the maximum extent possible:

(1) *Resource provider* is currently working in response service needed.

(2) *Resource provider* has documented history of participation in successful salvage and/or marine firefighting operations, including equipment deployment.

(3) *Resource provider* owns or has contracts for equipment needed to perform response services.

(4) *Resource provider* has personnel with documented training certification and degree experience (Naval Architecture, Fire Science, etc.).

(5) *Resource provider* has 24-hour availability of personnel and equipment, and history of response times compatible with the time requirements in the regulation.

(6) *Resource provider* has on-going continuous training program. For marine firefighting providers, they meet the training guidelines in NFPA 1001, 1005, 1021, 1405, and 1561 (Incorporation by reference, see § 155.140), show equivalent training, or demonstrate qualification through experience.

(7) *Resource provider* has successful record of participation in drills and exercises.

(8) *Resource provider* has salvage or marine firefighting plans used and approved during real incidents.

(9) *Resource provider* has membership in relevant national and/or international organizations.

(10) *Resource provider* has insurance that covers the salvage and/or marine firefighting services which they intend to provide.

(11) *Resource provider* has sufficient up front capital to support an operation.

(12) *Resource provider* has equipment and experience to work in the specific regional geographic environment(s) that the vessel operates in (e.g., bottom type, water turbidity, water depth, sea state and temperature extremes).

(13) *Resource provider* has the logistical and transportation support capability required to sustain operations for extended periods of time in arduous sea states and conditions.

(14) *Resource provider* has the capability to implement the necessary engineering, administrative, and personal protective equipment controls to safeguard the health and safety of their workers when providing salvage and marine firefighting services.

(15) *Resource provider* has familiarity with the salvage and marine firefighting protocol contained in the local ACPs for each COTP area for which they are contracted.

(c) A *resource provider* need not meet all of the selection criteria in order for you to choose them as a provider. They must, however, be selected on the basis of meeting the criteria to the maximum extent possible.

(d) You must certify in your plan that these factors were considered when you chose your resource provider.

§ 155.4052 Drills and exercises.

(a) A vessel owner or operator required by §§ 155.1035 and 155.1040 to have a response plan shall conduct exercises as necessary to ensure that the plan will function in an emergency. Both announced and unannounced exercises must be included.

(b) The following are the minimum exercise requirements for vessels covered by this subpart:

(1) Remote assessment and consultation exercises, which must be conducted quarterly;

(2) Emergency procedures exercises, which must be conducted quarterly;

(3) Shore-based salvage and shore-based marine firefighting management team tabletop exercises, which must be conducted annually;

(4) Response provider equipment deployment exercises, which must be conducted annually;

(5) An exercise of the entire response plan, which must be conducted every three years. The vessel owner or operator shall design the exercise program so that all components of the response plan are exercised at least once every three years. All of the components do not have to be exercised at one time; they may be exercised over the 3-year period through the required exercises or through an area exercise; and

(6) Annually, at least one of the exercises listed in § 155.4052(b)(2) and (4) must be unannounced. An unannounced exercise is one in which the personnel participating in the exercise have not been advised in advance of the exact date, time, or scenario of the exercise.

(7) Compliance with the National Preparedness for Response Exercise Program (PREP) Guidelines will satisfy the vessel response plan exercise requirements. These guidelines are available on the Internet at *https://Homeport.uscg.mil/exercises*. Once on that Web site, select the link for ''Preparedness for Response Exercise Program (PREP)'' and then select ''Preparedness for Response Exercise Program (PREP) Guidelines''. Compliance with an alternate program that meets the requirements of 33 CFR 155.1060(a), and has been approved under 33 CFR 155.1065 will also satisfy the vessel response plan exercise requirements.

§ 155.4055 Temporary waivers from meeting one or more of the specified response times.

(a) You may submit a request for a temporary waiver of a specific response time requirement, if you are unable to identify a resource provider who can meet the response time.

(b) Your request must be specific as to the COTP zone, operating environment, salvage or marine firefighting service, and response time.

(c) Emergency lightering requirements set forth in § 155.4030(b) will not be subject to the waiver provisions of this subpart.

(d) You must submit your request to the Commandant, Director of Prevention Policy (CG–54), via the local COTP for final approval. The local COTP will evaluate and comment on the waiver before forwarding the waiver request, via the District to the Commandant (CG–54) for final approval.

(e) Your request must include the reason why you are unable to meet the time requirements. It must also include how you intend to correct the shortfall, the time it will take to do so, and what arrangements have been made to provide the required response resources and their estimated response times.

(f) Commandant, Director of Prevention Policy (CG–54), will only approve waiver requests up to a specified time period, depending on the service addressed in the waiver request, the operating environment, and other relevant factors. These time periods are listed in Table 155.4055(g).

(g) Table 155.4055(g) lists the service waiver time periods.

TABLE 155.4055(g)—SERVICE WAIVER TIME PERIODS

Service	Maximum waiver time period (years)
(1) Remote salvage assessment & consultation	0
(2) Remote firefighting assessment & consultation	0
(3) On-site salvage & firefighting assessment	1
(4) Hull and bottom survey	2
(5) Salvage stabilization services	3
(6) Fire suppression services	4
(7) Specialized salvage operations	5

(h) You must submit your waiver request 30 days prior to any plan submission deadlines identified in this or any other subpart of part 155 in order for your vessel to continue oil transport or transfer operations.

Dated: December 17, 2008.

Brian M. Salerno,

Rear Admiral, U.S. Coast Guard, Assistant Commandant for Marine Safety, Security and Stewardship.

[FR Doc. E8–30604 Filed 12–30–08; 8:45 am]

BILLING CODE 4910–15–P

Federal Register

Wednesday,
December 31, 2008

Part V

Department of Labor

Mine Safety and Health Administration
30 CFR Parts 7 and 75
Refuge Alternatives for Underground Coal Mines; Final Rule

DEPARTMENT OF LABOR

Mine Safety and Health Administration

30 CFR Parts 7 and 75

RIN 1219–AB58

Refuge Alternatives for Underground Coal Mines

AGENCY: Mine Safety and Health Administration, Labor.

ACTION: Final rule.

SUMMARY: The final rule establishes the Mine Safety and Health Administration's (MSHA) requirements for refuge alternatives in underground coal mines and the training of miners in their use. It includes testing and approval requirements. The final rule implements section 13 of the Mine Improvement and New Emergency Response (MINER) Act of 2006. Consistent with the MINER Act, it includes MSHA's response to the National Institute for Occupational Safety and Health (NIOSH) Report on Refuge Alternatives.

DATES: *Effective Date:* The final rule is effective on March 2, 2009.

The incorporation by reference of certain publications listed in the rule is approved by the Director of the Federal Register as of March 2, 2009.

Compliance Dates

1. § 7.503—For any approval consideration by MSHA in the first year, an application for approval of a refuge alternative or component shall be submitted no later than April 30, 2009.

2. § 75.1502(c)(3), (c)(4)(vi), (c)(8), and (c)(10) through (12)—For mines with refuge alternatives in the mine on the effective date of the rule (60 days after date of publication), the operator shall submit a revised program of instruction to the appropriate District Manager for approval by April 30, 2009, and conduct initial mine emergency evacuation training and drills on the refuge alternatives and components, under § 75.1504(b)(3)(ii), (b)(4)(ii), and (b)(6) through (10), within 30 days of program approval. For mines with no refuge alternatives in the mine on the effective date of the rule March 2, 2009, the operator shall submit a revised program of instruction to the appropriate District Manager for approval within 30 days of receipt of the refuge alternatives or components, and conduct initial mine emergency evacuation training and drills on the refuge alternatives and components, under § 75.1504(b)(3)(ii), (b)(4)(ii), and (b)(6) through (9), within 30 days of program approval.

3. § 75.1504(c)(3)—For mines with refuge alternatives in the mine on the effective date of the rule March 2, 2009, the operator shall complete the initial annual expectations training on the refuge alternatives and components no later than December 31, 2009. For mines with no refuge alternatives in the mine on the effective date of the rule March 2, 2009, the operator shall complete the initial annual expectations training on the refuge alternatives and components no later than December 31, 2009, or within 60 days of receipt.

FOR FURTHER INFORMATION CONTACT: Patricia W. Silvey at *silvey.patricia@dol.gov* (E-mail), 202–693–9440 (Voice), or 202–693–9441 (Fax).

SUPPLEMENTARY INFORMATION: The outline of the final rule is as follows:

I. Introduction
  A. Statutory and Rulemaking Background
  B. Discussion of the Hazard
  C. Timeline for Implementation of the Final Rule
II. Section-by-Section Analysis
  A. Part 7 Approvals
  B. Part 75 Safety Standards
III. Regulatory Economic Analysis
  A. Executive Order 12866
  B. Population at Risk
  C. Costs
  D. Benefits
IV. Feasibility
  A. Technological Feasibility
  B. Economic Feasibility
V. Regulatory Flexibility Act and Small Business Regulatory Enforcement Fairness Act
  A. Definition of a Small Mine
  B. Factual Basis for Certification
VI. Paperwork Reduction Act of 1995
VII. Other Regulatory Considerations
  A. The Unfunded Mandates Reform Act of 1995
  B. The Treasury and General Government Appropriations Act of 1999: Assessment of Federal Regulations and Policies on Families
  C. Executive Order 12630: Government Actions and Interference with Constitutionally Protected Property Rights
  D. Executive Order 12988: Civil Justice Reform
  E. Executive Order 13045: Protection of Children from Environmental Health Risks and Safety Risks
  F. Executive Order 13132: Federalism
  G. Executive Order 13175: Consultation and Coordination with Indian Tribal Governments
  H. Executive Order 13211: Actions Concerning Regulations That Significantly Affect Energy Supply, Distribution, or Use

I. Introduction

This final rule is MSHA's response to the National Institute for Occupational Safety and Health (NIOSH) Report on Refuge Alternatives consistent with section 13 of the Mine Improvement and New Emergency Response (MINER) Act of 2006. The final rule requires that mine operators include refuge alternatives in the Emergency Response Plan (ERP) required by section 2 of the MINER Act. MSHA's objective, consistent with the MINER Act, is to improve the safety of mines and mining. This final rule improves mine operators' preparedness for mine emergencies and requires refuge alternatives underground to protect persons trapped when a life-threatening event occurs that makes escape impossible. Refuge alternatives also can be used to assist trapped miners in escaping from the mine after initial escape becomes impossible.

MSHA developed this final rule based on Agency data and experience, NIOSH recommendations, research on available and developing technology, state regulations, and comments and testimony from the mining community. The final rule includes requirements for—

- Testing and approval of refuge alternatives and components of refuge alternatives;
- Assuring that refuge alternatives are readily available, capable of sustaining trapped miners for 96 hours, and maintained in operating condition; and
- Training miners to locate, deploy and use, maintain, and transport refuge alternatives.

A. Statutory and Rulemaking Background

Section 2 of the MINER Act requires underground coal mine operators to develop and adopt a written Emergency Response Plan (ERP), which must be approved by MSHA. The ERP provides for the evacuation of all individuals endangered by an emergency and the maintenance of individuals trapped underground. All ERPs must provide for emergency supplies of breathable air for individuals trapped underground sufficient to maintain them for a sustained period of time.

MSHA issued Program Policy Letter (PPL) No. P06–V–10 (October 24, 2006) to implement section 2 of the MINER Act. The PPL provides guidance to mine operators for developing ERPs and to MSHA District Managers for approving ERPs. MSHA issued Program Information Bulletin (PIB) No. P07–03 (February 8, 2007) to provide additional guidance to be used in conjunction with the PPL. The PIB includes options for the quantity of breathable air that would be sufficient to maintain persons for a sustained period of time.

Section 13 of the MINER Act provides that NIOSH conduct research on refuge alternatives and submit a report on the results of the research to the Secretary of Labor. NIOSH issued its report in January 2008.

Section 13 of the MINER Act also provides that the Secretary of Labor—

> * * * provide a response to the Committee on Health, Education, Labor, and Pensions of the Senate and the Committee on Education and the Workforce of the House of Representatives containing a description of the actions, if any, that the Secretary intends to take based upon the [NIOSH] report, including proposed regulatory changes and the reasons for such actions.

MSHA reviewed NIOSH's report and determined that refuge alternatives are practical and, when integrated into the mine's comprehensive escape and rescue plans, will increase the chance for survival for persons trapped in underground coal mines.

MSHA published the proposed rule for refuge alternatives on June 16, 2008 (73 FR 34140). MSHA held four public hearings on the proposed rule. The hearings were held on July 29 in Salt Lake City, UT; on July 31 in Charleston, WV; on August 5 in Lexington, KY; and on August 7 in Birmingham, AL. The comment period closed on August 18, 2008.

B. Discussion of the Hazard

In developing the final rule, MSHA reviewed a number of underground coal mine accident reports and evaluated its accident and injury data from 1900 through 2006. During that period, 264 miners, who were alive after a mine accident, died later during rescue or escape. MSHA has estimated that recent MSHA standards could have saved the lives of 43 of these miners. Thus, for purposes of estimating benefits, this final rule could potentially have saved the lives of 221 miners over the 107 year period. If refuge alternatives had been available, MSHA estimates that the range of lives saved would have been between a low of 25 percent and a high of 75 percent. Using these estimates, the final rule potentially could save an average of from one to three lives every two years.

The preamble to the proposed rule discussed a number of accidents that reflect typical emergency conditions, hazards, and issues in underground coal mines. The explosions at the Sago Mine on January 2, 2006, and the Darby Mine No. 1 on May 20, 2006, which are especially relevant to this rulemaking, are summarized below.

The explosion at the Sago Mine killed one miner instantly and destroyed seals and filled portions of the mine with toxic levels of carbon monoxide. The remaining 12 miners barricaded themselves on the section when their attempts to evacuate were unsuccessful. The barricade was constructed in an area with high concentrations of carbon monoxide. Eleven miners died before they could be rescued. One miner was rescued, but was severely injured.

The force of the explosion at the Darby Mine No. 1 killed two miners. Four other miners encountered thick smoke and donned their SCSRs while attempting to evacuate. The miners eventually became separated and three died from carbon monoxide poisoning.

C. Timeline for Implementation of the Final Rule

MSHA is providing delayed compliance dates for some sections to give mine operators and applicants the time needed to comply with the stated requirements.

1. By April 30, 2009, an application for approval of a refuge alternative or component must be submitted for first year approval consideration by MSHA in accordance with § 7.503. MSHA expects that first year approvals will be completed by December 31, 2009.

2. By April 30, 2009, mine operators must submit a revised program of instruction to the appropriate District Manager for approval in accordance with § 75.1502. The operator must conduct initial mine emergency evacuation training and drills on refuge alternatives and components, under § 75.1504(b)(3)(ii), (b)(4)(ii), and (b)(6) through (10), within 30 days of program approval.

If the refuge alternatives necessary for the training are not yet available, MSHA will accept, as good faith evidence of compliance with the final rule, a valid, bona fide, written purchase order with a firm delivery date for the refuge alternatives. The mine operator must submit a revised program of instruction to the appropriate District Manager for approval in accordance with § 75.1502 within 30 days of receipt of the refuge alternatives. The operator must conduct initial mine emergency evacuation training and drills on refuge alternatives and components, under § 75.1504(b)(3)(ii), (b)(4)(ii), and (b)(6) through (10), within 30 days of program approval.

3. By December 31, 2009, mine operators must complete the initial annual expectations training on the refuge alternatives and components required by § 75.1504(c). However, if the refuge alternatives or components necessary for the training are not yet available, MSHA will accept, as good faith evidence of compliance with the final rule, a valid, bona fide, written purchase order with a firm delivery date for the refuge alternatives and components. The mine operator must complete the initial annual expectations training on the refuge alternatives and components no later than December 31, 2009 or within 60 days of receipt.

II. Section-by-Section Analysis

In developing this final rule, MSHA relied on the NIOSH report on refuge alternatives; research studies on various refuge alternatives; accident investigation reports, especially those for the 2006 Sago and Darby mine explosions; as well as public comments, hearing transcripts, and supporting documentation from all segments of the mining community, including States that already require refuge alternatives.

A. Part 7 Approvals

The approval requirements for refuge alternatives are set out in 30 CFR Part 7—Testing by Applicant or Third-Party. The final rule provides approval criteria, allows alternatives for satisfying the requirements, and promotes the development of new technology. It provides requirements for a complete self-contained refuge alternative and the following components:

- Structural, which creates an isolated atmosphere and contains the other integrated components.
- Breathable air, which includes the means to supply safe concentrations of oxygen.
- Air-monitoring, which provides occupants of the refuge alternative with devices to measure the concentrations of oxygen, carbon dioxide, carbon monoxide, methane, and other harmful gases, as applicable; and
- Harmful gas removal, which provides for removal of harmful gases from the refuge alternative.

Refuge alternatives also must include provisions for communications, lighting, sanitation, food, water, and first aid. These provisions must be approved in the ERP.

MSHA has a 20-year history of administering the part 7 approval program, which has reduced product testing costs and improved approval efficiency. Under the final rule, new subpart L of part 7 requires that an applicant or a third-party must test the refuge alternative or component according to the final rule. The applicant, usually a manufacturer, provides the required information and test results to MSHA to demonstrate that the refuge alternative or component meets the applicable technical requirements and test criteria. MSHA will issue an approval for a refuge

alternative or one of its components based on the Agency's evaluation of the information and test results submitted with the approval application. The MSHA approval under part 7 assures operators and miners that the refuge alternative can be used safely and effectively in underground coal mines and that the components can be used safely with each other.

The existing general provisions of subpart A of part 7 (§§ 7.1 through 7.10) apply to the testing and approval of refuge alternatives. Existing § 7.3(f) addresses the certification statement and requires that each application for original approval, subsequent approval, or extension of approval of a product shall include a certification by the applicant that the product meets the design portion of the technical requirements, as specified in the appropriate subpart, and that the applicant will perform the quality assurance functions specified in § 7.7. Consistent with the existing requirement, the applicant must provide a certification for refuge alternatives and components.

In addition, existing § 7.8 addresses post-approval product audits and requires that, on request, the approval-holder make a product available to MSHA for audit at no cost to MSHA, but no more than once a year except for cause. Consistent with the existing requirement, the approval-holder must provide a refuge alternative or component to MSHA for audit.

Section 7.501 Purpose and Scope

Final § 7.501, like the proposal, provides that subpart L establishes requirements for MSHA approval of refuge alternatives and components for use in underground coal mines. It states that the purpose of approved refuge alternatives is to provide a life-sustaining environment for persons trapped underground when escape is impossible. Refuge alternatives also can be used to facilitate escape by sustaining trapped miners until they receive communications regarding escape options or until rescuers arrive.

MSHA considers refuge alternatives as a last resort to protect persons who are unable to escape from an underground coal mine in the event of an emergency. NIOSH stated, in its report on refuge alternatives, that—

> * * * the potential of refuge alternatives to save lives will only be realized to the extent that mine operators develop comprehensive escape and rescue plans that incorporate refuge alternatives.

Several commenters expressed concern that refuge alternatives have not been proven effective in an actual mine and that human subject testing is necessary for proper functioning and durability of the units. Some commenters requested that MSHA defer promulgating a final rule until human subject testing is completed. Commenters also questioned the use of models and calculations in lieu of human subject testing. However, other commenters stated that human subject testing is not necessary nor is it the best proof of viability. One commenter stated that ''there is enough data available to properly simulate the metabolic heat and breathing of humans without necessarily subjecting humans to the risks of a manned test'' and that ''[t]his is not to say that some manned testing may not be valuable to validate portions [of] the test protocol and for training development.''

The requirements of the final rule are extrapolated from existing Federal and State requirements and from published reports from the U.S. Bureau of Mines and NIOSH. In addition, in developing the final rule, MSHA consulted with experts and other knowledgeable professionals, and evaluated the comments and testimony on the proposal. Based on MSHA's knowledge and experience, the Agency believes that the results of human subject testing, which may be appropriate at some later date, are not necessary for the final rule. Accordingly, the requirements of the final rule are not based on human subject testing.

MSHA continues to work with NIOSH on new technology requirements in the MINER Act. MSHA is aware that NIOSH is developing a protocol and seeking approval for human subject testing. If approved, the results of this human subject testing will not be available prior to the effective date of the final rule. The Agency will consider the results of such testing for future rulemaking, if warranted.

MSHA has analyzed various design specifications of manufactured refuge alternatives and has developed approval requirements that manufacturers must follow. Except as otherwise provided in the rule, mine operators are permitted to use only refuge alternatives and components for which the design specifications have been approved by MSHA. MSHA recognizes that, under the Mine Act, States generally may enact laws or prescribe by regulation additional refuge alternative requirements to the extent they are more stringent than MSHA's standards. Such laws and regulations are limited by principles of conflict preemption to requiring specific refuge alternatives that have been approved by MSHA, and cannot under any circumstances require the use of a refuge alternative that has not been approved. Moreover, it is MSHA's intent that its approval of specifications for a refuge alternative preempts private tort litigation questioning the propriety of those specifications. MSHA weighed various trade-offs in setting requirements for approved refuge alternatives and components, such as those involved in arriving at space and volume requirements and strength requirements. Refuge alternatives and components cannot be altered once approved without seeking potentially time-consuming approval for modifications. Tort suits deeming approved designs insufficient could introduce state-by-state uncertainty to national manufacturers, thereby threatening the steady commercial supply of refuge alternatives and components and potentially leaving miners unprotected.

Section 7.502 Definitions

Final § 7.502, like the proposal, establishes a number of definitions because refuge alternatives represent a relatively new technology for underground coal mines and the terminology may not be widely understood.

One commenter requested that a definition of ''component'' and ''examinable'' be included. MSHA does not believe that the Agency needs to define the term ''component'' because several sections in the final rule identify the four types of components—structural, breathable air, air-monitoring, and harmful gas removal—and their specific requirements. The final rule also clarifies examinations and inspections for structural components.

Apparent Temperature

The final rule clarifies the proposal, and defines apparent temperature as the measure of relative discomfort due to the combined effects of air movement, heat, and humidity on the human body. The final rule clarifies MSHA's intent that the term is used to measure relative discomfort. When no air movement is present, the apparent temperature equals the heat index. As heat and humidity increase, the amount of evaporation of sweat from the body decreases. MSHA received a comment that the Agency should specify the method for determining apparent temperature as part of the definition. The Agency has not specified the method in the definition, which is unchanged; however, the apparent temperature is addressed in the final rule under § 7.504(b).

Breathable Oxygen

The final rule, like the proposal, defines breathable oxygen as oxygen that is at least 99 percent pure with no harmful contaminants. Some commenters suggested that MSHA provide performance-based approval criteria to promote innovative new technology, and that the proposal was unnecessarily restrictive. The final rule, like the proposal, includes necessary parameters for oxygen purity.

One commenter suggested that the final rule include a definition of breathable air. MSHA issued a Program Information Bulletin on Breathable Air (PIB P07–03), which addressed the recommended standards for breathable air as identified by the American National Standards Institute (ANSI)/ Compressed Gas Association (CGA) Commodity Specifications for Grade D Breathable Compressed Air. Accordingly, the final rule does not define breathable air.

Flash Fire

The final rule, like the proposal, defines flash fire as a fire that rapidly spreads through a diffuse fuel, such as airborne coal dust or methane, without producing damaging pressure. MSHA notes that a flash fire may occur in an environment, such as an underground coal mine, where fuel and air become mixed in adequate concentrations to combust. In an underground coal mine, a flash fire can be a rapidly moving flame front from a combustion explosion. In its report, NIOSH recommended that the fire resistance for refuge alternatives be 300 °F for 3 seconds. NIOSH based its recommendation on NFPA 2113–2007, the National Fire Protection Association's ''Standard on Selection, Care, Use, and Maintenance of Flame-Resistant Garments for Protection of Industrial Personnel Against Flash Fire,'' but advised that additional investigation is warranted.

A flash fire is defined by NFPA 2113 as ''a fire that spreads rapidly through a diffuse fuel, such as dust, gas, or vapors of an ignitable liquid, without the production of damaging pressure.'' NFPA 2113 also includes a longer explanation of flash fire in the Annex A.3.3.16. This explanation addresses flame temperatures for diffused fuel flash fires ranging from 1,000° to 1,900 °F. A commenter requested that MSHA clarify the definition of flash fire by adding that a flash fire is not an ongoing fire. MSHA has explained heat transfer and duration and believes the definition given is adequate. The final rule is unchanged.

Noncombustible Material

The final rule, like the proposal, defines noncombustible material as material, such as concrete or steel, that will not ignite, burn, support combustion, or release flammable vapors when subjected to fire or heat. MSHA received one comment requesting modification of the proposed definition to include tent deployment information. MSHA has addressed this comment elsewhere in this preamble under final § 7.505(a)(6) and believes that the proposed definition is adequate. The final rule is unchanged.

Overpressure

The final rule, like the proposal, defines overpressure as the highest pressure over the background atmospheric pressure that could result from an explosion, which includes the impact of the pressure wave on an object. MSHA notes that explosion pressures are normally expressed as an overpressure beyond standard atmospheric pressure. Standard atmospheric pressure is 14.7 pounds per square inch (psi) (one atmosphere) at sea level. For example, air pressure in a car tire is measured with a pressure gauge as 30 psi, which is an overpressure. The absolute pressure of the air inside the tire is 44.7 psi. One commenter supported and no commenters opposed the proposal.

Refuge Alternative

The final rule, like the proposal, defines refuge alternative as a protected, secure space with an isolated atmosphere and integrated components that create a life-sustaining environment for persons trapped in an underground coal mine.

One commenter requested that the proposed definition be modified to emphasize the importance of protecting persons from toxic gases entering the space prior to occupancy and to allow the use of an individual breathable air supply. Under the final rule, refuge alternatives must have an isolated atmosphere and life-sustaining environment. Another commenter requested that the term be defined with more clarity. MSHA believes that the definition as stated provides sufficient detail and concludes that no change to the final rule is necessary.

Section 7.503 Application Requirements

Final § 7.503(a), like the proposal, requires that an application include information to assure that MSHA can determine if a refuge alternative or component meets the technical requirements for approval, functions as intended, and is safe for use in an underground coal mine.

Final paragraph (a)(1), like the proposal, requires that the application contain the refuge alternative's or component's make and model number, if applicable. This provision assists MSHA in identifying specific units or parts from different companies.

One commenter requested that the final rule allow approval of design criteria rather than approval of specific models. MSHA has considered the implications of making this change, such as auditing critical characteristics and integration of components, and determined that no change to the rule is necessary.

Final paragraph (a)(2)(i), like the proposal, requires that the application list the refuge alternative's or component's parts, and include the MSHA approval number for electric-powered equipment. With the approval number, MSHA would be able to verify that electric-powered equipment is either approved as permissible or, with respect to certain equipment such as air-monitoring equipment or gas detectors, is approved as intrinsically safe. MSHA received no comments on this provision.

Final paragraph (a)(2)(ii), like the proposal, requires that the list of a refuge alternative's or component's parts in the application include each component's or part's in-mine shelf life, service life, and recommended replacement schedule. Comments concerning shelf life, service life, and replacement schedule are addressed elsewhere in this preamble under final §§ 7.508(c)(4) and 75.1506(a)(3).

Final paragraph (a)(2)(iii) clarifies the proposal and requires that the application list the refuge alternative's or component's parts that include materials, which have a potential to ignite, used in each component or part with their MSHA approval number. The proposal would have required that the application list the materials used in each component or part with their MSHA approval number or statement that the materials are noncombustible. One commenter stated that not all materials used in refuge alternatives or components can be noncombustible. Another commenter requested clarification of noncombustible materials and MSHA approved electrical components. The final rule clarifies that the MSHA approval number must be included for materials that have a potential to ignite. This provision helps assure that materials are safe for use in an underground coal mine. The hazardous nature of an underground coal mine requires that

sources of ignition be eliminated. The confined space of an underground coal mine necessitates that materials be designed so that they will not contribute to a fire or give off harmful gases when exposed to heat.

Final paragraph (a)(2)(iv) was not in the proposed rule. It requires that the application list the refuge alternative's or component's parts that include a statement that the component or part is compatible with other components; and upon replacement, is equivalent to the original component or part.

Commenters expressed concern regarding the reliability of refuge alternatives that consist of multiple separate components. Some commenters opposed mixing different models of breathable air components because miners might get confused during an emergency and be placed at greater risk.

This new provision is responsive to comments and clarifies MSHA's intent to assure that components or parts that are approved must be interchangeable or must integrate with the other components or parts in the refuge alternative so that the refuge alternative will continue to operate as intended. Under the final rule, if the component or part is a replacement, it must be equivalent to the original component or part. The component or part must be designed for the capacity of the refuge alternative for which it is intended.

Final paragraph (a)(3) is substantively the same as the proposal. It requires that the application specify the capacity and duration (the number of persons it is designed to maintain and for how long) of the refuge alternative or component. For example, the application must include a specific length of time that the refuge alternative or component could support a specified number of persons. This information is necessary so that MSHA can appropriately evaluate the performance of the refuge alternative or component and determine if it meets the requirement that it sustain persons for 96 hours. The final rule includes a non-substantive change. It does not include the ''per-person per-day'' measurement. Comments on capacity and duration and shift changeover are discussed elsewhere in this preamble under final § 75.1506(b)(2).

Final paragraph (a)(4), like the proposal, requires that the application specify the length, width, and height of the space required for storage of each component. The Agency needs this information for components approved separately to assure that the refuge alternative will have enough usable space for occupants when all components are stored. MSHA did not receive comments on this provision.

Final § 7.503(b), like the proposal, requires that the application provide additional specific information. Final paragraph (b)(1) requires that the application specify a description of the breathable air component, including drawings, air-supply sources, piping, regulators, and controls. This information establishes that the component is included and is in its proper location. MSHA received no comments on the proposed requirement.

Final paragraph (b)(2) requires that the application specify the maximum volume of the refuge alternative, excluding the airlock; the dimensions of floor space and volume provided for each person using the refuge alternative; and the floor space and volume of the airlock. This information assures that there is adequate usable space for occupants when all components, parts, equipment, and material are shown in drawings under paragraph (b)(6) in their respective place.

One commenter stated that the phrase in the preamble ''in their respective place'' implied that the rule required defined locations for specific items. The final rule clarifies that the application specify the dimensions of floor space and volume for each person to assure that the space and volume provided for persons is usable and not reserved for storage.

Another commenter questioned why the airlock in a unit is excluded from the space calculations. In response to comments, final §§ 7.505(a)(1) and 75.1506(b)(1) clarify that the airlock may be included in the space and volume of the refuge alternative if waste is disposed outside the unit. Therefore, final § 7.503(b)(2) replaces the term ''interior dimensions'' of the airlock with ''floor space and volume'' of the airlock which must be included in the application.

Final paragraph (b)(3), like the proposal, requires that the application specify the maximum positive pressures in the interior space and airlock and a description of the means used to limit or control the positive pressure. This information allows MSHA to determine whether the atmospheric pressure in the refuge alternative will maintain good air, without being excessive, as persons enter and pass through the airlock. Excessive pressure could create adverse physiological effects on persons. MSHA did not receive comments on this provision. The final rule includes a non-substantive change. MSHA deleted the term ''allowable.''

Final paragraph (b)(4), like the proposal, requires that the application specify the maximum allowable apparent temperature of the interior space and the airlock and the means to control the apparent temperature. MSHA will use this information to evaluate the approval of the refuge alternative. MSHA did not receive comments on this provision. Comments concerning the apparent temperature inside the refuge alternative are discussed elsewhere in this preamble under § 7.504(b)(1).

Paragraph (b)(5) is new and provides further clarification of the Agency's intent with respect to controlling internal apparent temperature. This provision requires that applicants specify in the application the maximum mine air temperature under which the refuge alternative is designed to operate when the unit is fully occupied.

This provision is added in response to commenters' concerns regarding the effect that the mine temperature has on the internal apparent temperature in the refuge alternative. Commenters stated that the temperature outside of the unit must be taken into consideration because of heat transfer. This provision corresponds to the requirement in § 75.1507(a)(12) that the Emergency Response Plan (ERP) include the maximum mine air temperature at each of the locations where refuge alternatives are to be placed.

Final paragraph (b)(6) is redesignated from proposed paragraph (b)(5). Like the proposal, it requires that each application include drawings that show the features of each component and contain sufficient information to document compliance with the technical requirements. MSHA's intent is that the drawings of each component should illustrate the internal configuration of the refuge alternative. Drawings should include the dimensions and layout of the refuge alternative components, controls, and materials necessary for proper operation. This information provides a basis for MSHA approval of the refuge alternative. MSHA did not receive comments on this provision.

Final paragraph (b)(7) is redesignated from proposed paragraph (b)(6) and has been changed from the proposal. It requires that the applicant provide a manual rather than a training manual that contains sufficient detail for each refuge alternative or component addressing in-mine transportation, operation, and maintenance of the unit.

Commenters generally supported the proposal. However, one commenter expressed concern that the manuals not be used as a substitute for miner training because the manufacturer's manual may be too detailed and complicated. Another commenter requested that training materials include

detailed information on turning off devices between readings to conserve battery life and adjusting oxygen flow. Another commenter stated the manual should be written in a manner that includes individual mine specific information such as SCSR caches, communication and tracking, and life lines.

MSHA recognizes that, in general, manufacturers provide information necessary for safe and effective use of their products. Consistent with this general practice, the final rule requires the applicant to provide a manual which contains detailed information on in-mine transportation, operation, and maintenance of the refuge alternative. The manual would be used by MSHA to evaluate and approve the refuge alternative. The final rule clarifies MSHA's intent that the manual be used by operators to develop training material required under § 75.1502(c), concerning mine emergency evacuation program of instruction; § 75.1504(b), concerning quarterly training; § 75.1504(c), concerning annual expectations training; and § 75.1508 concerning training on examinations, maintenance, or repairs.

Final paragraph (b)(8) is redesignated from proposed paragraph (b)(7) and has been changed from the proposal. It clarifies that the applicant must provide a summary of procedures for deploying refuge alternatives. MSHA will use this information to evaluate the approval and the operator may use this information to develop instructions for persons in the deployment of refuge alternatives. This provision changes the proposed requirement that the applicant provide a summary of procedures for ''constructing'' refuge alternatives because prefabricated units do not require construction, and the structural components of units consisting of 15 psi stoppings constructed prior to an event do not require approval under part 7.

Final paragraph (b)(9), redesignated from proposed paragraph (b)(8) and the same as the proposal, requires that the application include a summary of the procedures for using the refuge alternative. This information will be used by MSHA to evaluate the approval and by operators to develop instructions for persons using refuge alternatives. MSHA did not receive comments on this provision.

Final paragraph (b)(10), redesignated from proposed paragraph (b)(9) and the same as the proposal, requires that the application specify the results of inspections, evaluations, calculations, and tests conducted under this subpart. MSHA will use this information to evaluate the effectiveness and compatibility of refuge alternative components. For example, the application must contain the calculation of the rate oxygen is delivered on a per person basis and the results of tests, including calculations, of the carbon dioxide removal (scrubbing) to demonstrate that the refuge alternative will maintain a safe atmosphere for 96 hours. Without having these calculations readily available, the Agency would have difficulty independently verifying that the test results are satisfactory. MSHA did not receive comments on this provision.

Final § 7.503(c), like the proposal, requires that the application for approval of the air-monitoring component provide specific information. This information is necessary for the applicant or third party to make an effective evaluation of the component and to provide a basis for MSHA approval of the air-monitoring component.

Final paragraph (c)(1), like the proposal, requires that the application specify the operating range, type of sensor, gases measured, and any environmental limitations including the cross-sensitivity to other gases, of each detector or device in the air-monitoring component. The Agency believes that this information is essential for MSHA to determine that persons inside the refuge alternative will be aware of the concentrations of carbon dioxide, carbon monoxide, and methane, inside and outside the refuge alternative, including the airlock. In addition, this will assure that oxygen concentrations can be monitored simultaneously. MSHA did not receive comments on this provision.

Final paragraph (c)(2), like the proposal, requires that the application include the procedures for operation of the individual devices so that they function as necessary to test gas concentrations over a 96-hour period. Manufacturers must properly design the system to control gas concentrations inside the refuge alternative. This provision will assist MSHA's evaluation of the air-monitoring component.

One commenter stated that ''few if any monitors exist that will operate for 96 hours continuously.'' The commenter stated that provisions must be made for recharging or changing batteries and that instrument manufacturers should provide ''options for extending the operational life of their devices in a potentially explosive atmosphere.'' In the proposal, MSHA did not state that air monitoring instruments or devices were intended to operate continuously. This issue is discussed elsewhere in this preamble under § 7.507 concerning air monitoring components. The Agency anticipates that refuge alternative manufacturers will work with monitoring instrument manufacturers to satisfy the requirements of this provision. The final rule is the same as the proposal, except for an editorial change for clarity.

Final paragraph (c)(3), like the proposal, requires that the application include procedures for monitoring and maintaining breathable air in the airlock, before and after purging. Monitoring and maintaining breathable air in the airlock is necessary to remove contaminants and minimize contamination inside the refuge alternative as miners pass through the airlock into the interior space. MSHA did not receive comments on this provision.

Final paragraph (c)(4), like the proposal, requires that the application include instructions for determining the quality of the atmosphere in the airlock and refuge alternative interior and a means to maintain breathable air in the airlock. Determining the quality of the air and maintaining breathable air are necessary to sustain trapped miners. MSHA did not receive comments on this provision.

Final § 7.503(d)(1) and (2), like the proposal, require that the application for approval of the harmful gas removal component specify the volume of breathable air available for removing harmful gas both at start-up and while persons enter through the airlock; and the maximum volume of each gas that the component is designed to remove on a per-person per-hour basis. Information on harmful gas removal is essential for MSHA to determine the ability of the refuge alternative to sustain occupants for 96 hours. These final provisions also provide information on the removal of carbon dioxide that is exhaled by the occupants and the removal of other harmful gases.

One commenter stated that this provision is not practical and should be removed. Another commenter recommended that the requirement be performance-based. MSHA does not agree since the Agency needs this information to evaluate the adequacy of the harmful gas removal systems to meet the needs of the occupants for 96 hours. The applicant can calculate the amount of purge air available or scrubbing capability for a range of expected conditions. MSHA expects the application to contain sufficient information to enable the Agency to determine whether the refuge alternative or component meets the technical and performance requirements of this subpart.

Proposed § 7.503(e) is not included in the final rule. It would have required the applicant to certify that each component was constructed of suitable materials, was of good quality workmanship, was based on sound engineering principles, was safe for its intended use, and was designed to be compatible with other components in the refuge alternative, within the limitations specified in the approval.

Several commenters objected to the Agency's use of ''subjective terms.'' One commenter stated that the provision ''leaves itself open to a broad range of interpretations that will result in considerable confusion on the part of applicants and reviewers.'' Commenters stated that the final rule ''must have specific parameters that are measurable and have a clear limit beyond which they fail'' and ''stipulate what these phrases exactly mean'' or remove the provision.

Due to commenters concerns, MSHA evaluated the information, design criteria, and testing results required to be specified in the application for approval. Based on this evaluation, MSHA determined that the content of the application will be sufficient to allow MSHA to evaluate whether the refuge alternative or component meets the requirements for approval. In addition, existing § 7.3(f) requires an applicant's certification that the product meets the requirements specified in the appropriate subpart. Also, to clarify the Agency's intent, and in response to comments, MSHA added a requirement, final § 7.503(a)(2)(iv), that the application provide a statement that the component is compatible with other components. With this change, and with the existing requirements, the Agency determined that it is not necessary to include proposed § 7.503(e) in the final rule.

Section 7.504 Refuge Alternatives and Components; General Requirements

Final § 7.504, like the proposal, addresses safety and health requirements that refuge alternatives and components must meet to gain MSHA approval.

Final § 7.504(a)(1) clarifies the proposal and requires that electrical components that are exposed to the mine atmosphere must be approved as intrinsically safe for use in an underground coal mine. Further, it provides that electrical components located inside the refuge alternative must be either approved as intrinsically safe or approved as permissible.

One commenter supported the proposal stating that refuge alternatives and components should be explosion-proof or intrinsically safe. Another commenter stated that the rule should clarify the use of approved permissible electrical equipment and approved intrinsically safe equipment.

The final rule clarifies MSHA's intent that electrical components of refuge alternatives that are exposed to the mine atmosphere must be approved as intrinsically safe. However, because a non-explosive atmosphere exists inside a refuge alternative, electrical components located inside the unit must be either approved as intrinsically safe or approved as permissible. This provision helps assure that the refuge alternative or component will not contribute to a secondary fire or explosion.

Final paragraph (a)(2), like the proposal, requires that a refuge alternative or component not produce continuous noise levels in excess of 85 dBA in the structure's interior. One commenter stated that noise is not likely to be a problem in a shelter during occupancy and questioned the logic for the proposal. MSHA included this requirement in the final rule because continuous noise above 85 dBA can interfere with communication and could adversely affect hearing, and the Agency is aware that noise controls, such as dampening material, are available to control noise levels.

Final paragraph (a)(3), like the proposal, requires that the refuge alternative or component not liberate harmful or irritating gases or particulates into the structure's interior or airlock. The Agency is aware that some nonmetallic materials off-gas. Vapors, aerosols or particulates should not be released into the refuge alternative. The provision requires that materials used in a refuge alternative or component be tested and evaluated to verify that they do not release harmful or irritating gases. The application would have to include the results of the tests and evaluation. No commenters opposed the proposal.

Final paragraph (a)(4), like the proposal, requires that the refuge alternative or component be designed to be moved safely with the use of appropriate devices, such as tow bars. MSHA recognizes that refuge alternatives could be a hazard to miners during transport. Based on MSHA's experience, the Agency believes that inadequate rigging and towing devices could result in hazards to miners. The refuge alternative should be designed with proper connections and devices to eliminate or reduce hazards that may occur when chains, ropes, or slings are used.

Commenters supported the proposal. One commenter noted that the refuge alternative can be moved safely using a tow bar. The final rule remains unchanged from the proposal.

Final paragraph (a)(5), like the proposal, requires that the refuge alternative and components be designed to withstand forces from collisions of the structure during transport and handling. This provision helps assure that the refuge alternative and components are not damaged during transport and handling.

One commenter suggested that all components be subjected to shock testing. Another commenter noted that many mines have required special attachments or bumpers, and requested that the final rule include these modifications.

Different mining conditions warrant different designs. The final rule is performance-oriented, allowing operators to tailor refuge alternative and component designs to the specific conditions in their mines. Designs can incorporate bumpers, guarding, skids, packing and securing devices, and rigging components. In addition, components should be configured, arranged, and stored to minimize shifting, movement, or damage during handling and routine transport. MSHA has evaluated all comments, and determined that the final rule should be the same as the proposal.

Final paragraph § 7.504(b), like the proposal, requires that the apparent inside temperature be controlled. Body heat and heat generated by chemical reactions (*i.e.*, carbon dioxide scrubbing chemicals) are inherent heat-producing sources within a refuge alternative. Ambient temperature in a refuge alternative also is affected by the mine temperature compounded by high humidity in the sealed environment. High humidity reduces a body's ability to regulate temperature by sweating, which could result in a dangerously elevated internal body temperature. The carbon dioxide absorption process also generates heat and humidity. There is currently no permissible air conditioning equipment that will address heat and humidity in underground coal mines.

Final paragraph (b)(1), like the proposal, requires that when a refuge alternative is fully occupied and used in accordance with the manufacturer's instructions and defined limitations, the apparent temperature in the refuge alternative must not exceed 95° Fahrenheit. MSHA requested comments on the apparent temperature and mitigation of heat stress and heat stroke, and requested that commenters address

the generation of heat and the methods for measuring heat stress on persons occupying the refuge alternative.

Most commenters generally supported the proposal. Some commenters noted that the proposal did not include air-conditioning to address metabolic heat buildup. One commenter stated that the proposal stifles creativity and eliminates innovative new technology, and one commenter suggested using chemical cooling packs or cooling vests to maintain core body temperature at a safe level. MSHA believes that there could be methods, including air conditioning, for controlling temperature that would be acceptable under the final rule. Chemical cooling packs or cooling vests may be used to supplement maintaining core body temperature. However, these devices have not been established as reliable, and therefore, may not be used as a substitute to the requirement for maintaining the apparent temperature inside the refuge alternative.

One commenter suggested that it was not appropriate to require an interior temperature without a corresponding ambient rock temperature. MSHA reviewed NIOSH/Raytheon UTD's Report on Miner Refuge Chamber Thermal Analysis (NIOSH/Raytheon report). The NIOSH/Raytheon report concluded that the rock type has a negligible effect on the conduction of heat away from a refuge alternative in an underground mine. In addition, the NIOSH/Raytheon report stated that the amount of heat conducted through the floor of a refuge alternative is small compared to the amount of heat that is carried away by convection. Accordingly, the final rule does not include a provision for corresponding ambient rock temperature.

One commenter stated that the International Standards Organization (ISO) standard, ISO 7243:1989(E), ''Hot environments—Estimation of the heat stress on working man, based on the WBGT-index (wet bulb globe temperature),'' should be used to evaluate heat stress.

ISO 7243 specifies periods of work and rest based on the air temperature and the level of activity throughout a workday for working in a hot environment daily, with breaks during the day and periods of relief between exposures. The ISO standard does not apply to the conditions addressed by the final rule because persons in a refuge alternative could be exposed for several days without an opportunity to recover.

Apparent temperature is a measure of relative discomfort due to the combined effect of heat and humidity. The concept of apparent temperature was developed by R.G. Steadman (1979) and was based on physiological studies of evaporative skin cooling for various combinations of ambient temperature and humidity. The likelihood of adverse effects from heat may vary with a person's age, health, and body characteristics; however, apparent temperatures greater than 80 °F are generally associated with some discomfort. Core body temperatures in excess of 104 °F are considered life-threatening, with severe heat exhaustion or heat stroke possible after prolonged exposure or significant physical activity. The December 2007 Foster Miller Report[1] concluded that the apparent temperature within a confined space occupied by humans should not exceed 95 °F.

Based on the Agency's review of many standards, studies, and reports, and the comments and testimony, MSHA believes that applying ISO 7243 could result in dangerously high apparent temperatures in the refuge alternative. This is because the limit specified in ISO 7243 is an 8-hour average, not a maximum continuous exposure. Therefore, using the ISO 7243 average as a maximum exposure level would allow as much as 50% higher temperature than even the ISO 7243 standard allows, and for a continuous 96-hour period as opposed to 8 hours. This would be fatal to the occupants. Accordingly, the final rule is the same as proposed.

Final paragraph (b)(2) clarifies the proposal and requires that tests be conducted to determine the maximum apparent temperature in the refuge alternative when used at maximum occupancy and in conjunction with required components. In addition, the final rule requires that an application include these test results including calculations. The final rule clarifies MSHA's intent that tests be conducted and that the test results including calculations be reported on the application. Test results could also include data, records, and other supporting documentation reported on the application. MSHA received no comments on this provision.

Final § 7.504(c), like the proposal, requires that refuge alternatives include additional measures to protect the safety and survival of miners. These requirements include a means for communicating with persons on the surface, lighting, sanitation, first aid, and repairs.

Final paragraph (c)(1), requires a two-way communication facility that is a part of the mine communication system, which can be used from inside the refuge alternative; and accommodations for an additional communication system and other requirements as defined in the communications portion of the operator's approved Emergency Response Plan (ERP). MSHA is aware that these additional systems may not yet be available, but as they are developed, mine operators will be required to include them in their ERPs. The MINER Act requires, by June 15, 2009, that ERPs contain wireless communication systems. MSHA is working with NIOSH on this emerging technology and will provide further guidance to the mining community with respect to the Agency's expectations for ''wireless communication'' systems in ERPs. Manufacturers may need to provide other accommodations for these systems. In the final rule, this provision has been revised to reflect the language in the safety standards for communications facilities in this rulemaking. Comments addressing these communication systems are addressed in that section.

In the preamble to the proposed rule and in the Agency's opening statements at the public hearings, MSHA requested comments on including a requirement that refuge alternatives be designed with a means to signal rescuers on the surface. This was intended to be a means to assure that rescuers on the surface could be contacted if the communications systems become inoperable. This signal would have been similar to what miners had done in the past by hammering on the roof, ribs, or floor to create sounds that can be detected by seismic devices located on the surface.

One commenter stated that the final rule should not require the use of a seismic location device unless MSHA is willing to obtain significant upgrades to its seismic capabilities. However, most commenters did not respond to MSHA's request on this issue.

MSHA also requested comments on whether the final rule should include a requirement that the manufacturer design refuge alternatives with a means to signal underground rescuers with a homing device. Such a requirement would assure that rescuers could detect the trapped miners within the mine.

Some commenters supported adding a provision for a homing device in refuge alternatives. They stated that the signal could help rescuers determine whether anyone was in the refuge alternative. Several opposed such a provision, for example, stating that the homing device was unnecessary because there already is a requirement to identify the locations of the units on the escapeway maps.

The final rule, like the proposal, does not contain a provision addressing

[1] Foster Miller. *Phase II Report*, December 2007.

signaling or homing devices. After reviewing the comments, MSHA agrees with commenters opposing such provisions and has determined that the requirements for a signaling device that would create a seismic sound to be detected by rescuers on the surface should not be included in the final rule. Likewise, the Agency has determined that the requirements for a homing device that would create an electronic signal to be detected by rescuers underground should not be included in the final rule.

Final paragraph (c)(2), like the proposal, requires that refuge alternatives include lighting sufficient for persons to perform tasks. Lighting is essential to allow persons to read instructions, warnings, and gauges; operate gas monitoring detectors; and perform other activities related to the operation of the refuge alternatives.

In the preamble to the proposal, MSHA recommended a minimum of 1 foot candle of lighting be provided per miner per day.[2] The Agency also noted that lighting should not generate significant heat, or require continual manual power for light generation.

Several commenters recommended light sticks and cap lamps. Another commenter stated that MSHA should be flexible with respect to a lighting requirement and that the proposal requires technology that may not be currently available. One commenter stated that MSHA should not require 1 foot-candle per day per miner. Another commenter pointed out that there may be added risks of electrical hazards and requested that, as the provision presents more potential problems than it solves, it be omitted from the final rule.

Although MSHA agrees that light sticks can be used, higher intensity lighting may be required for certain tasks. The final rule includes the same performance-oriented requirement as the proposal. The final rule includes a non-substantive change. It includes the term ''for persons.''

Final paragraph (c)(3), like the proposal, requires that refuge alternatives include a means to contain human waste effectively and minimize objectionable odors. A plastic bag and closed receptacle could be used to contain waste and prevent objectionable odors. The final rule does not require a specific method of waste disposal. The length, width, and height of the container housing the sanitation system, including operating instructions, should be in the refuge alternative's manual. Information regarding sanitation assures that the applicant has included an adequate means for containing waste.

One commenter pointed out a number of options for sanitation and waste disposal that are currently available. Some commenters requested that the final rule require that human waste be disposed of outside the refuge alternative. Under the final rule, waste can be disposed of from the interior of the refuge alternative, as long as the disposal does not compromise the integrity of the refuge alternative or affect its operation. The final rule is the same as proposed.

Final paragraph (c)(4), like the proposal, requires that refuge alternatives include first aid supplies. This requirement assures that first aid supplies are available for treating injured miners.

One commenter requested that the Agency specify the nature and quantity of required supplies. Another commenter stated that first aid kits should contain instructions for treating injuries that could be anticipated in the aftermath of an accident and warned that the inclusion of ''anxiety and or sleep inducing drugs'' could present medical issues.

First aid supplies must be adequate to provide for the number of persons injured in an emergency. In an underground mine emergency, MSHA expects that there will be a proportionally higher number of injuries related to lacerations, burns, and fractures resulting from explosions and fires. The refuge alternative must contain first aid supplies to address these injuries, but the final rule does not specify the content of the first aid kit. The final rule is the same as the proposal and is consistent with the safety standards for ERPs in this final rule.

Final paragraph (c)(5), like the proposal, requires that refuge alternatives be stocked with materials, parts, and tools for repair of components. Manufacturers could provide a repair kit with necessary materials and appropriate tools to perform repairs. Materials and tools should include metal repair materials, fiber material, adhesives, sealants, tapes, and general hardware (*i.e.*, screws, bolts, rivets, wire, zippers and clips). Powered tools must be approved as intrinsically safe and permissible. One commenter supported and no commenters opposed the proposal. The final rule is the same as the proposal.

Final paragraph (c)(6), is redesignated and clarified from proposed § 7.506(i). It requires a fire extinguisher that meets the requirements for portable fire extinguishers used in underground coal mines under part 75; and that is appropriate for fires involving the chemicals used for harmful gas removal; and that uses a low-toxicity extinguishing agent that does not produce a hazardous by-product when activated. One commenter supported and no commenters opposed the proposal. The final rule clarifies MSHA's intent. MSHA's intent is that the fire extinguisher must protect miners from potentially toxic chemicals in the confined atmosphere of a refuge alternative. The final rule requires that a fire extinguisher meet the requirements of MSHA's existing standards for portable fire extinguishers. It changes the proposed requirement limited to carbon dioxide chemicals to chemicals used for harmful gas removal, and non-toxic extinguishing agent to low-toxicity extinguishing agent. The final rule does not include the proposed requirement that the fire extinguisher not produce hazardous by-product when heated.

Final § 7.504(d)(1), (2), and (3) are substantively the same as the proposal, and require that containers used for storage of refuge alternative components or provisions be airtight, waterproof, and rodent-proof; easy to open and close without the use of tools; and conspicuously marked with an expiration date and instructions for use. These requirements assure that the containers' contents will be useable when needed.

One commenter requested clarification of the components that are covered by this provision. Another commenter requested that the final rule only apply to specific items, such as food and water, which are subject to degradation.

The final rule clarifies the proposal by including the term ''or provisions.'' Provisions include items such as supplies, materials, systems, and food and water. Food and water would need to be contained in airtight, waterproof, and rodent-proof containers because these provisions are subject to degradation.

Section 7.505 Structural Components

Final § 7.505, like the proposal, addresses structural component requirements for refuge alternatives.

Final paragraph (a)(1) requires that refuge alternatives provide at least 15 square feet of floor space per person, like the proposal, but includes changes in the required cubic feet of volume per person according to the following chart for mining heights:

[2] MIL–STD–1472F, Lighting for bomb shelters, NOTICE 1, 05 December 2003.

Mining height (inches)	Unrestricted volume (cubic feet) per person *
36 or less	30
>36 – ≤42	37.5
>42 – ≤48	45
>48 – ≤54	52.5
>54	60

* Includes an adjustment of 12 inches for clearances.

In addition, the final rule clarifies that the airlock can be included in the space and volume if waste is disposed outside the refuge alternative.

The volume of the refuge alternative is calculated by assuming two factors: (1) 6 inches is necessary to allow for clearance of the refuge alternative to be moved; and (2) the usable interior height of the refuge alternative is reduced by 6 inches for the roof and floor beams. As an example, a 36-inch mine height is reduced by 6 inches for clearance and 6 inches for inside beams leaving 24 inches or 2 feet. The 24 inches or 2 feet multiplied by 15 square feet of floor space equals 30 cubic feet of volume per person. Under the final rule, MSHA intends for persons to have this space without being affected by other factors such as stored items.

In the preamble to the proposed rule and in the Agency's opening statements at the public hearings, MSHA requested comments on the proposed requirement of at least 15 square feet of floor space and 60 cubic feet of volume per person, particularly in low mining heights. MSHA received comments in support of and opposed to the proposal.

Some commenters supported 15 square feet of floor space per person, but stated that the 60 cubic feet of volume per person was not a sufficient amount of space for each miner and could result in a higher risk of carbon dioxide exposure or excessive heat within the refuge alternative. These commenters urged MSHA to adopt the 85 cubic feet recommendation of NIOSH. In its comment on the proposed rule, NIOSH stated that the NIOSH recommendation of 85 cubic feet was ''based on published research conducted under the old civil defense program [OCDM 1958], and it is difficult to apply those findings directly to mining applications.'' NIOSH further stated that in the absence of NIOSH testing, it supports the interior volume requirement in the proposed rule.

Other commenters stated that both the proposed space and volume requirements were excessive in an emergency because persons could survive with less space. In addition, some stated that larger refuge alternatives were hard to transport, would require more compressed air and oxygen cylinders, or may not be feasible in all seam heights. Others stated that due to the orientation of the occupants, floor space per person is the critical measurement, and not volume. Some commenters stated that less space was needed because most of the time the maximum number of persons to be accommodated would be less than half because overlapping crews, i.e., hot-seating, occurs only during a small part of the work day.

Many commenters suggested space and volume criteria that were less than those in the proposal. In support of their position, some of these commenters relied on the South African standard for spacing while others relied on various engineering studies or manufacturer findings. Commenters suggestions ranged from 6.4 to 10 square feet of floor space and from 30 to 46.5 cubic feet of volume. Other commenters suggested a performance-oriented approach, stating that MSHA should not specify any space and volume requirements.

Finally, some commenters stated that the proposal omitted consideration of seam height. These commenters stated that compliance with the proposal would be difficult in mines with low seam heights.

For mining heights greater than 54 inches, the final rule requires 60 cubic feet of volume. However, in response to commenters' concerns, the final rule includes varying requirements for volume, based on mining heights that are less than or equal to 54 inches. These varying volume requirements accommodate commenters' concerns regarding the ability to maneuver, deploy, or use larger units in mines with low seam heights.

After reviewing the comments, MSHA determined that the proposed 15 square feet of floor space per person is necessary to assure that persons can conduct necessary activities in the refuge alternative. Occupants will need to attend to harmful gas removal; monitor gas levels; attend to basic needs, such as drinking, eating, and using the sanitation facilities; and provide care to injured miners. Adequate space is needed to accommodate larger than average persons. In addition, adequate volume is needed for proper function of passive harmful gas removal systems. It is also important to note that larger volumes are more effective at dissipating heat because of increased surface area, which helps control the apparent temperature in the interior space of the refuge alternative. MSHA recognizes that the lower mining height refuge alternatives may have less volume per person, but must still maintain apparent temperature as required in this final rule.

Some commenters expressed concern regarding the statement in the preamble to the proposal that the space requirements do not include the airlock. They stated that, once everyone was inside, the airlock was usable space and should be included in calculating the space and volume per person. To clarify the Agency's intent with respect to the proposal and in response to comments, under the final rule, the airlock may be included in calculating space and volume provided that waste is disposed of outside the refuge alternative.

Final paragraph (a)(2), like the proposal, requires that refuge alternatives include storage space that secures and protects the components during transportation and that permits ready access to components for maintenance examinations. Paragraph (a)(2) has been clarified to reflect the Agency's intent that this requirement applies to maintenance examinations rather than preshift visual examinations.

MSHA clarified the final rule in response to a comment asking for clarification regarding the type of examinations required under this paragraph. MSHA intends that a refuge alternative must be designed to allow maintenance examinations to be conducted. The components must be secured to prevent shifting during transport or moves. Maintenance examinations assure that the components will be readily available for deployment. Preshift examinations are discussed elsewhere in this preamble under §§ 7.505(d)(1) and 75.360(d).

Final paragraph (a)(3), like the proposal, requires that refuge alternatives include an airlock that creates a barrier and isolates the interior space from the mine atmosphere, except for a refuge alternative capable of maintaining adequate positive pressure. This provision addresses the need to provide breathable air to persons entering the refuge alternative if the mine atmosphere is contaminated. In this case, pressures need to be incrementally higher in the interior space as compared to the airlock and the airlock pressure needs to be higher than the mine atmosphere. Persons will pass through the airlock via airtight doors into the interior space. The exception to the requirement for an airlock recognizes that the positive pressure would prevent outside air from contaminating the refuge alternative; therefore, an airlock would not be necessary.

One commenter stated that both positive pressure inside the shelter and

an airlock must be required for all types of shelters. Another commenter asked that MSHA clarify ''adequate positive pressure'' and the scenario under which this exception will be accepted. In the final rule, the Agency uses the commonly understood definition of ''adequate'' to mean that there would be sufficient positive pressure to allow the refuge alternative to function as it would with an airlock. After considering the comments received, the final rule is the same as the proposal.

Final paragraph (a)(3)(i), like the proposal, requires that the airlock be designed for multiple uses to accommodate the structure's maximum occupancy. This requirement assures access for the maximum number of persons for which the refuge alternative is designed.

One commenter requested clarification of the proposed requirement relating to the number of purges. MSHA has performed limited carbon monoxide purge testing that indicates a 50 percent carbon monoxide concentration reduction with each purge. In PIB P07–03, under Safe Haven Assumptions providing breathable air, MSHA addressed carbon monoxide (CO) purging. Purging ''efficiency'' was estimated to require compressed air cylinders providing at least three times the amount of safe haven volume. Miners are to be inside the volume being purged wearing an SCSR until purging is accomplished. The Agency anticipated using compressed air cylinders as necessary to reduce Safe Haven concentration to less than 25 parts per million (ppm) for safe havens with a captive volume (not using positive pressure forced air from either a compressed air line or borehole from the surface).

Final paragraph (a)(3)(ii), like the proposal, requires that the airlock be configured to accommodate a stretcher without compromising its function. The airlock must be large enough to accommodate a stretcher with an injured miner while the outside door is closed and the inside door is open.

One commenter, who supported the proposal, stated that this proposed requirement was absolutely necessary to accommodate the need to bring injured miners into an airlock. Another commenter noted that a large amount of space would be required to accommodate a stretcher in the airlock. MSHA believes that this final requirement is necessary to accommodate a stretcher in the air lock and to allow transfer of the injured miner on the stretcher into the refuge alternative's interior space. MSHA notes that elsewhere in the final rule, in response to comments, the Agency has clarified its intent with respect to the maximum volume of refuge alternatives and stated that the airlock can be included in calculating space and volume. After a review of all comments, the final rule is the same as the proposal.

Final paragraph (a)(4) makes editorial changes, but is substantively the same as the proposal and requires that refuge alternatives be designed and made to withstand 15 pounds per square inch (psi) overpressure for 0.2 seconds prior to deployment. This requirement assures that the refuge alternative is capable of withstanding an initial explosion and that the components are not damaged and are able to function as intended.

MSHA received comments both in support of and opposed to the proposal. One commenter who supported the proposal stated that ''the 15 psi value for the survivability of the shelter is sufficient as levels higher than that would not likely result in survivors.'' Other commenters who supported the proposal referred to the West Virginia Mine Safety Technology Task Force Report of May 29, 2006, which recommended that refuge alternatives only be designed to survive an initial event.

Commenters who opposed the proposal stated that the proposal was inadequate because explosions can create pressures greater than 20 psi, that refuge alternatives should be capable of withstanding a second explosion, and that inflatable shelters are unsafe because they may not endure a second explosion.

The final rule is consistent with the NIOSH Report, which recommended a 15 psi overpressure for 0.2 seconds. NIOSH test results from the Lake Lynn Laboratory support a 15 psi overpressure and a 0.2 second duration for a typical blast wave propagation in an underground mine. MSHA notes that the Agency has reviewed information from the U.S. Department of Defense weapon designers which use a 13 psi peak overpressure as the 100% lethal threshold.

With respect to secondary explosions, the NIOSH report states that a number of factors make optimal design of refuge chambers difficult. These factors include the complexity of mine explosions and the interaction of the explosion with the physical environment. The Report further states: ''[t]he most likely locations of an initial explosion can be predicted with some certainty,'' and ''[i]f there is an ignition source, there could be subsequent explosions, although the location and strength of these are more difficult to forecast.'' Because of the difficulty in predicting the likelihood and strength of a secondary explosion, the final rule does not include strength requirements with respect to a second explosion. After reviewing all the comments, the final rule is substantively the same as the proposal.

Final paragraph (a)(5) makes an editorial change, but is substantively the same as the proposal, and requires that refuge alternatives be designed and made to withstand exposure to a flash fire of 300 °Fahrenheit for 3 seconds prior to deployment. This requirement assures that the refuge alternative is capable of withstanding a fire and that the components will not be damaged and are able to function as intended.

One commenter agreed with the proposal. The final rule is substantively the same as the proposal.

Final paragraph (a)(6), substantively the same as the proposal, requires that structural components of refuge alternatives be made with materials that do not have a potential to ignite or are MSHA-approved. Materials under this final rule could include, but are not limited to, inflatable shelters and any materials providing a secure space to protect the inside atmosphere from the hazardous outside atmosphere. MSHA notes that materials are generally tested for noncombustibility under American Society for Testing and Materials (ASTM) E136 ''Standard Test Method for Behavior of Materials in a Vertical Tube Furnace at 750 Degrees C'' (2004), although a similar ISO test, ISO 1182:2002 also exists. Tests for flame resistance in existing 30 CFR 7.27 could be used to determine the flame resistance of materials that have the potential to ignite.

One commenter requested that MSHA clarify the extent of materials that must be flame resistant or noncombustible and clarify whether the requirement applies to materials that will be deployed and used only after the event occurs.

This provision applies to any materials used to provide a secure space to protect persons from the hazardous outside atmosphere. This final rule assures that the refuge alternative is capable of withstanding a fire and that the components will not be damaged and are able to function as intended in case of an emergency. Taken together, paragraphs (a)(4), (a)(5), and (a)(6) would assure that the refuge alternative is able to withstand an initial fire and that the structure and internal components and provisions will not be damaged and will function as intended following the emergency. The final rule

remains substantively the same as the proposal.

Final paragraph (a)(7) makes an editorial change, but is substantively the same as the proposal, and requires that refuge alternatives be made from reinforced material that has sufficient durability to withstand routine handling and resist puncture and tearing during deployment and use. Refuge alternatives need to be made from reinforced material to be capable of withstanding the harsh underground mining environment. This especially applies to refuge alternatives with inflatable structures.

One commenter supported and no commenters opposed the proposed requirement. The final rule is substantively the same as the proposal.

Final paragraph (a)(8), makes an editorial change, but is substantively the same as the proposal, and requires that refuge alternatives be guarded or reinforced to prevent damage to the structure that would hinder deployment, entry, or use. This requirement assures that the refuge alternative will be designed to incorporate protective features to protect the integrity of the structure and operation of doors, inflatable extensions of the refuge alternative, and other functions necessary to deploy, enter, or use the refuge alternative.

One commenter supported and no commenters opposed the proposal. The final rule is substantively the same as the proposal.

Final paragraph (a)(9), like the proposal, requires that refuge alternatives permit measurement of outside gas concentrations without exiting the structure or allowing entry of the outside atmosphere. Gas monitoring of the atmosphere outside the refuge alternative is needed when there is a lack of communication with rescuers and persons are considering whether evacuation is a viable option.

Several commenters supported the proposal. One commenter stated that it was absolutely essential to be able to measure outside gas concentrations without exiting the structure or allowing outside air to enter. The final rule is the same as the proposal.

Final paragraph § 7.505(b), like the proposal, requires inspections or tests of the structural components. Final paragraph (b)(1) clarifies the proposal and requires that a test be conducted to demonstrate that trained persons can fully deploy the structure, without the use of tools, within 10 minutes of reaching the refuge alternative. This provision assures that persons can deploy and use the refuge alternative in a short amount of time upon reaching it. In a worst-case scenario, where only one SCSR is available to provide 60 minutes of breathable air, the first 30 minutes could be used to evacuate and, if evacuation is not possible, return to the refuge alternative. If the person returns to the refuge alternative, 10 minutes could be used to establish a secure space between the interior and exterior atmospheres, and 20 minutes could be used to purge the interior space to establish a breathable atmosphere. Under the final rule, testing should be conducted simulating real-life situations and conditions, such as smoke, heat, humidity and darkness while using SCSRs.

Several commenters questioned whether miners could activate the refuge alternative within 10 minutes. MSHA recognizes there may be differences in refuge alternatives necessitating different start-up procedures. Training requirements for persons deploying and using refuge alternatives are addressed in part 75. The Agency has included this training requirement in recognition of the limited time available for persons to establish a secure space between the interior and exterior atmospheres and to purge the refuge alternative to establish a breathable air atmosphere. The final rule clarifies the Agency's intent that a ''test'' be conducted. The final rule is substantively the same as the proposal.

Final paragraph (b)(2) clarifies the proposal and requires that a test be conducted to demonstrate that an overpressure of 15 psi applied to the pre-deployed refuge alternative structure for 0.2 seconds will not allow gases to pass through the structure. The test must verify that the refuge alternative structure is capable of withstanding an initial explosion, and that gases do not pass through the structure following an explosion. The test should demonstrate the integrity of the structure and that doors remain operational.

MSHA did not receive any comments on this proposal. The final rule clarifies that a ''test'' be conducted and makes an editorial change. The final rule is substantively the same as proposed.

Final paragraph (b)(3) clarifies the proposal and requires that a test be conducted to demonstrate that a flash fire of 300 °F for 3 seconds will not allow gases to pass from the outside to the inside of the structure. The test must verify that the refuge alternative structure is capable of withstanding a flash fire, and that gases do not pass through the structure following a flash fire. The test should demonstrate the integrity of the structure and that doors remain operational.

MSHA did not receive any comments on this proposal. The final rule clarifies that a ''test'' be conducted. The final rule is substantively the same as proposed.

Final paragraph (b)(4) clarifies the proposal and requires inspections to determine that overpressure forces of 15 psi applied to the pre-deployed structure for 0.2 seconds do not prevent the stored components from operating. This provision helps assure that stored components are capable of withstanding an initial explosion and will function as intended following an explosion.

One commenter supported and no commenters opposed the proposal. The final rule clarifies that an ''inspection'' be conducted and makes an editorial change. The final rule is substantively the same as proposed.

Final paragraph (b)(5) clarifies the proposal and requires an inspection to determine that a flash fire of 300 °F for 3 seconds does not prevent the stored components from operating. This provision helps assure that stored components are capable of withstanding a flash fire and will function as intended following a flash fire.

One commenter supported and no commenters opposed the proposal. The final rule clarifies that an ''inspection'' be conducted. The final rule is substantively the same as proposed.

Final paragraph (b)(6) clarifies the proposal and requires a test to demonstrate that each structure resists puncture and tearing when tested in accordance with ASTM D2582–07 ''Standard Test Method for Puncture-Propagation Tear Resistance of Plastic Film and Thin Sheeting.'' This standard is copyrighted by ASTM International, 100 Barr Harbor Drive, PO Box C700, West Conshohocken, PA 19428–2959. Individual reprints (single or multiple copies) of this standard may be obtained by contacting ASTM at the above address or at 610–832–9585 (phone), 610–832–9555 (fax), or *service@astm.org* (e-mail); or through the ASTM Web site (*http://www.astm.org*). A copy may be inspected at any MSHA Coal Mine Safety and Health district office, or at MSHA's Office of Standards, 1100 Wilson Blvd., Room 2353, Arlington, Virginia, 22209, or at the National Archives and Records Administration (NARA). For information on the availability of this material at NARA, call 202–741–6030, or go to: *http://www.archives.gov/federal_register/code_of_federal _regulations/ibr_locations.html.*

This requirement assures that the material used to make the refuge alternative is capable of withstanding the harsh mining environment and

abrasion, tears, and punctures which might result during handling, transportation, and deployment. This especially applies to inflatable-type refuge alternatives and tent refuge alternative structures. These materials must be capable of maintaining a secure space without compromising the interior atmosphere of the refuge alternative.

One commenter supported and no commenters opposed the proposal. The final rule clarifies that a ''test'' be conducted. The final rule is substantively the same as proposed.

Final paragraph (b)(7) clarifies the proposal and requires a test to demonstrate that each reasonably anticipated repair can be completed within 10 minutes of opening the storage space for repair materials and tools. MSHA is concerned that inflatable-type refuge alternative structures have the potential to be ripped, torn, or develop a leak. A leak or tear must be repaired without delay to avoid jeopardizing the safety of persons occupying the refuge alternative. The atmosphere of a refuge alternative must remain isolated at all times. The test would demonstrate that a miner would be able to make a repair such as mending a tear or resealing the fabric within 10 minutes of opening the storage space.

Some commenters questioned whether a person could repair the refuge alternative structure within 10 minutes. A commenter stated that the manufacturer cannot guarantee any particular time frame for repairs, especially during an emergency, and that mandating a time limit is neither practical nor enforceable.

MSHA recognizes there may be differences in refuge alternatives, and, hence, in refuge alternatives' repair procedures. This requirement in included in the final rule in recognition of the limited time available, to repair a structure or to re-establish a secure space between the interior and exterior atmospheres of the refuge alternative to maintain a breathable air atmosphere. Training requirements for miners for refuge alternatives, which are addressed in part 75, must cover repairs. Training will help prepare miners for the possible need to repair a refuge alternative after a protective isolated atmosphere has been established. After considering the comments, the final rule clarifies that a ''test'' be conducted, but the final rule is substantively the same as the proposal.

Final paragraph (b)(8) clarifies the proposal and requires a test to demonstrate that no harmful gases or noticeable odors are released from nonmetallic materials before or after the flash fire test. It also requires a test to identify the gases released and determine their concentrations. This requirement assures that the nonmetallic materials will not emit odors that may sicken persons occupying the refuge alternative. Noticeable odors also might indicate that a material is giving off vapors or gas. Although a noticeable odor may not be objectionable, it could still be harmful. Testing should include instruments used for detecting any released gases. Nonmetallic materials such as paints, plastics, and fiber that are used in the manufacturing of the refuge alternative structure should not release harmful fumes, vapors, or gases.

One commenter stated that, when the refuge alternative is stored, only the externally exposed components need to be tested for toxic gases when exposed to a flash fire test. This commenter suggested that the final rule clarify that requirement only applies to materials potentially exposed to flash fires in the stored configuration.

MSHA expects that a number of different types and combinations of refuge alternatives and components will be used, and that some of these will likely be stored inside the structural components. Testing would address the interior materials and components to assure that they do not release harmful fumes, vapors, or gases under normal conditions. An inspection must be performed to determine that no harmful gases or harsh odors are released from nonmetallic materials after the flash fire test. A properly designed system also would control heat penetration inside the refuge alternative to protect the components and materials in the interior of the refuge alternative.

The Agency agrees with the commenter that the flash fire test would be performed on a stored refuge alternative and its components with the contents of the refuge alternative inside. However, the contents of a refuge alternative should remain inside the refuge alternative when a test is performed.

The final rule clarifies that an ''inspection'' be conducted after the flash fire test. The final rule is substantively the same as the proposal.

Final § 7.505(c) makes an editorial change, but is substantively the same as the proposal, and provides requirements for pressurized air if it is used to deploy the structure or maintain its shape. Final paragraph (c)(1), like the proposal, requires a pressure regulator or other means to prevent over-pressurization of the structure. Over-pressurization of the interior space or airlock space would create a safety hazard. The regulator must be designed to assure that effective relief of overpressure can be accomplished.

Final paragraph (c)(2), like the proposal, requires a means to repair and re-pressurize the structure in case of failure of the structure or loss of air pressure. If the inflatable-type refuge alternative is damaged or leaks, it will need repair and additional compressed air to re-establish the pressure and volume of air that was lost.

One commenter supported and no commenters opposed the proposal. The final rule remains the same as the proposal.

Final § 7.505(d)(1) makes an editorial change, but is substantively the same as the proposal, and requires that the refuge alternative structure provide a means to conduct a preshift examination of the components critical for deployment, without entering the structure. This requirement assures that necessary inspections can be performed to identify problems that may occur in case of an emergency. The gauges and controls for critical components, such as compressed air and oxygen, should be easy to observe to determine the readiness of those components.

Some commenters supported the proposal. Other commenters opposed it, stating that the final rule should require that a preshift examination be conducted inside the refuge alternative to examine critical components.

MSHA does not encourage entering a refuge alternative for pre-shift examinations. The Agency believes that the structure should be designed so that components critical for deployment, such as gauges and controls, can be easily observed externally. After considering the comments, the final rule remains substantively unchanged from the proposal.

Final paragraph (d)(2), like the proposal, requires that the refuge alternative structure provide a means to indicate unauthorized entry or tampering. This requirement assures that a refuge alternative is intact and ready for use, if necessary.

One commenter supported the proposal. Another commenter requested that the proposal be changed to permit operators to enter the refuge to examine the cylinders on a regular basis, and that there should be a requirement for a means to detect tampering with components and materials stored inside the refuge.

As stated in the proposal, tamper-proof seals are necessary and must be provided for visual indication of unauthorized entry into the refuge alternative. This deters tampering with

or pilfering of the contents of the refuge alternative. Refuge alternatives would need to be designed so that if examination or repair requires entry into the refuge alternative, then the seal or other means can be replaced. The final rule remains unchanged from the proposal.

Section 7.506 Breathable Air Components

Requirements in this section assure that there is adequate breathable air inside the refuge alternative because maintaining breathable air inside the refuge alternative is vital to sustain persons trapped underground. The Agency recognizes that different types and combinations of breathable air components from several manufacturers may be used to provide breathable air for refuge alternatives.

Final § 7.506(a), clarifies the proposal and requires that breathable air must be supplied by compressed air cylinders, compressed breathable-oxygen cylinders, or boreholes with fans installed on the surface or compressors installed on the surface. The final rule clarifies MSHA's intent that fans or compressors installed on the surface are to be used with boreholes. In addition, the final rule contains an editorial change, but remains substantively unchanged from the proposal. It requires that only uncontaminated breathable air be supplied to the refuge alternative. These final requirements assure that the breathable air component is reliable and ready to be deployed and used.

One commenter stated that specific approval requirements could stifle innovation and technological advances, and that MSHA should follow a performance-oriented approach and specify only the quantity and quality of air or oxygen entering the shelter. MSHA is promulgating this final rule to implement the MINER Act's goal related to the maintenance of individuals trapped underground in the event that miners are not able to evacuate the mine. To achieve this goal, the Agency's final rule must provide requirements that assure that refuge alternatives will operate effectively. To allow for innovations in technology, the Agency has developed a final rule that is largely performance-oriented. Under the final rule, applicants have a variety of options for developing refuge alternatives that will maintain trapped miners. In addition, final § 7.510 allows MSHA to approve refuge alternatives and components that incorporate new technology if the applicant demonstrates that the refuge alternative or component provides at least the same level of protection as those meeting the requirements of Subpart L—Refuge Alternatives.

One commenter observed that, in at least two mines outside the United States, operators had installed backup systems for providing breathable air. Another commenter also supported backup systems for providing breathable air. While the final rule does not require the use of a secondary, independent breathable air component (a backup system), operators are encouraged to provide backup breathable air systems for use with refuge alternatives.

One commenter suggested that the final rule include an option that would permit mines with existing exhaust ventilation systems to ventilate through boreholes to provide breathable air in the refuge alternative. The final rule does not permit this type of option because it is not reliable. Breathable air systems must be able to operate following an explosion or fire. Main mine fans are sometimes damaged by explosions and may not be operable following an explosion or fire.

Final § 7.506(b) clarifies the proposal and provides requirements that assist MSHA in evaluating the effectiveness, compatibility, and supply of the breathable air component. The final rule, which is substantively the same as the proposal, states that the procedures must be ''included'' rather than ''followed''.

Final paragraph (b)(1) requires that mechanisms be provided and procedures be included so that, within the refuge alternative, the breathable air will sustain each person for 96 hours.

Several commenters requested an explanation with respect to the requirement for providing 96 hours of breathable air, some stating that 48 hours of breathable air would be sufficient. Other commenters supported the 96-hour requirement.

Each mine emergency is a unique event and it is impossible to predict with precision the period of time required to maintain miners prior to rescue. To provide for an added margin of safety, the Agency has determined that it is necessary to require a 96-hour supply of breathable air. The 96-hour supply of breathable air in the final rule will assist the rescue effort by providing necessary time for rescuers to safely reach trapped miners. The depth of the mine, the geology of the overburden, and the terrain above the mine significantly affect rescue activities. Mine rescue protocol requires monitoring of mine atmospheres and assessing the risk prior to mine rescue teams entering the mine and making progressive steps underground toward trapped miners. Successful mine rescue progression often requires repairs to damaged infrastructure, *e.g.*, roof control systems, and ventilation controls. History has shown there can be delays associated with implementing successful mine rescue protocols and procedures that can delay reaching trapped miners.

In MSHA's February 8, 2007, PIB P07–03, the Agency stated that it considered 96 hours of breathable air to be necessary, and concluded that a 96-hour supply was warranted. In arriving at the 96-hour requirement in this final rule, MSHA reviewed recent and historical data on entrapments. While most safety and health professionals and researchers agree that refuge alternatives can sustain trapped persons, there is not general agreement on the amount of time that the refuge alternative should be capable of sustaining miners. After reviewing Agency data and comments, the Agency continues to believe that the 96-hour requirement is necessary and the final rule is the same as proposed.

Final paragraph (b)(2), like the proposal, requires that mechanisms be provided and procedures be included so that, within the refuge alternative, the oxygen concentration is maintained at levels between 18.5 and 23 percent. This requirement is consistent with the NIOSH report.

A commenter stated that the minimum oxygen level in refuge chambers should be 19.5 percent. Existing § 75.321 requires that the air in areas where persons work or travel must contain at least 19.5 percent oxygen. MSHA believes that the recommendation in the NIOSH Report for a minimum of 18.5 percent will be adequate to sustain miners in the isolated atmosphere of the refuge alternative. Like the proposal, the final rule includes a range for oxygen due to the variety of oxygen delivery systems used. Further, MSHA has included the upper limit to lessen the risk of fire or explosion.

MSHA believes that the atmosphere in refuge alternatives would experience levels of 18.5 percent only intermittently and of short duration and expects that the level of 19.5 percent would be available to persons for most of the time. Data show that short-term levels of 18.5 percent are not harmful to the persons who are normally at rest, not working, and are not likely to experience difficulty breathing, conditions that are likely to be present in the refuge alternative. The Foster

Miller Report [3] cites a large body of work, from a number of sources, indicating safe working levels for oxygen below 19.5 percent. Based on its review of comments and data, the Agency has kept the final rule the same as proposed.

Final paragraph (b)(3) clarifies the proposal and requires that mechanisms be provided and procedures be included so that, within the refuge alternative, the average carbon dioxide concentration is 1.0 percent or less, and excursions do not exceed 2.5 percent.

MSHA calculated oxygen consumption rates for persons using a refuge alternative. Because most activity would involve sleeping or resting, and because a small amount of activity would involve taking readings or changing curtains, MSHA estimated activity levels of 4/5 of the time at rest and 1/5 of the time engaged in moderate activity. Oxygen consumption at the assumed breathing rate would be 1.32 cubic feet per hour per person (0.022 cubic feet per minute per person). These oxygen consumption rates were based on the U.S. Bureau of Mines, Foster Miller Report, ''Development of Guidelines for Rescue Chambers,'' Volume I, 1983.

In PIB P07–03, MSHA demonstrated the rate at which a person would experience adverse health effects from carbon dioxide if it were not removed from the environment. MSHA used air supply calculations and activity levels based on information provided in the Foster Miller report. The Agency used a hypothetical sealed space with a volume of 1,800 cubic feet (20 feet long, 18 feet wide and 5 feet high) that contained one person. The initial air quality was assumed to be 19.5 percent oxygen and 0.03 percent carbon dioxide, and the breathing rate (4/5 of the time at rest and 1/5 of the time engaged in moderate activity) for oxygen inhaled is 0.022 cubic feet per minute per person.

For this example, MSHA found that one person could be maintained 49.5 hours in an 1,800 cubic foot enclosed space with an initial air quality of 19.5 percent oxygen and 0.03 percent carbon dioxide. This equates to 1.65 minutes per cubic foot of enclosed space (volume). Using these same parameters, 10 persons could be maintained for 4.95 hours before the carbon dioxide concentration reached the defined unacceptable level of 3 percent based on Peele Mining Engineers' Handbook and MSHA's current Short Term Exposure Limit. Further, under the circumstances, 10 persons would reach 10 percent carbon dioxide and resulting unconsciousness in approximately 16.6 hours.

One commenter stated that the MSHA requirement for carbon dioxide levels was too stringent and cited international standards that were 5 percent. Several commenters discussed the ill effects of high levels of carbon dioxide and supported MSHA's proposal.

The NIOSH report recommends that components operate to maintain carbon dioxide at or below the levels in the final rule (1 percent with excursions not exceeding 2.5 percent) and, based on a review of medical information, research, and accident experience, MSHA is aware of ill effects associated with exposure to concentrations of carbon dioxide greater than the levels in the final rule. MSHA reviewed international standards for safe levels of carbon dioxide and found none to be higher than 1.25 percent for extended periods. The concentrations of carbon dioxide in the enclosed atmosphere of a refuge alternative need to be within established limits to prevent debilitating or even lethal effects. Based on comment, data, and Agency experience, the final rule remains at 1 percent and excursions must not exceed 2.5 percent.

Final § 7.506(c) makes an editorial change, but is substantively the same as the proposal and requires that breathable air supplied by compressed air from cylinders, fans, or compressors provide a minimum flow rate of 12.5 cubic feet per minute (cfm) of breathable air for each person. Compressor air intakes should be installed and maintained to assure that only clean, uncontaminated air enters the compressors. In addition, compressors must have the capacity to deliver the required volume of air at the point of expected usage.

MSHA notes that the use of compressed air cylinders as the sole means of providing breathable air may be impractical and the Agency encourages mine operators to consider other options. As MSHA pointed out in PIB P07–03, when using a borehole to deliver sufficient quantities of breathable air, a fan or equivalent method should be used to force fresh air into the hole with enough positive pressure to overcome total mine pressure.

During the rulemaking process and at each public hearing, MSHA requested comments on the proposed flow rate and asked that commenters be specific including alternatives, rationale, safety benefits to miners, technological and economic feasibility, and supporting data.

Several commenters opposed the proposal. Some of these commenters stated that the minimum flow rate was too high. Other commenters requested clarification that the minimum flow rate only applied when carbon dioxide is not scrubbed. One commenter suggested that the manufacturer determine flow rate based on the refuge alternative design.

The minimum flow rate in this final rule is based on MSHA studies, comparisons with existing OSHA requirements, and engineering handbooks. MSHA has determined that the flow rate of 12.5 cfm is the minimum amount of air needed for respiration and dilution of carbon dioxide and other harmful gases. In addition, the 12.5 cfm flow rate assures positive pressure to prevent contamination from the mine atmosphere. This requirement applies to breathable air systems that do not incorporate carbon dioxide scrubbing components. The Agency's intent is for breathable air supplied by compressed air from cylinders, fans, or compressors to be used from the surface through a borehole or with an in-mine horizontal piping system that is protected from explosions. Based on comment, data, and Agency experience, the final rule remains the same as the proposal.

Final paragraph (c)(1), like the proposal, provides requirements for fans or compressors. In PIB P07–03, MSHA provided a number of recommendations that should be followed when compressors are used to provide breathable air underground. These recommendations would also apply when fans are used for the same purpose. MSHA recommended that compressor air intakes should assure that only clean, uncontaminated air enters the compressors.

Final paragraph (c)(1)(i), like the proposal, requires that fans or compressors be equipped with a carbon monoxide detector located at the surface that automatically provides a visual and audible alarm if carbon monoxide in supplied air exceeds 10 parts per million (ppm). This provision helps assure that harmful levels of carbon monoxide are not transferred into the refuge alternative. This requirement is the same as the carbon monoxide concentration in supplied breathable air from oil-lubricated compressors as established by OSHA in 29 CFR 1910.134(i)(7), which will maintain uniformity in requirements for the use of this specialized equipment. Although the NIOSH recommended value of maximum concentration of carbon

[3] Foster Miller. *Phase II Report,* Chapter 4, Table 2, page 3, December 2007; and U.S. Bureau of Mines. *Development of Guidelines for Rescue Chambers, Volume I,* Table 2, page 20, October 1983.

monoxide is 25 ppm, MSHA believes that, based on the Agency's experience, controlling supplied air delivered to a refuge alternative should contain no more than 10 ppm.

One commenter stated that a carbon monoxide detector should not be required when systems are not equipped with internal combustion engines. One commenter supported the proposed requirement for a carbon monoxide detector located on the surface.

The final rule, like the proposal, requires the use of carbon monoxide detectors when fans and compressors are used on the surface. The Agency recognizes that compressors or fans may operate in the vicinity of other equipment having gas or diesel engines and the carbon monoxide detector safety feature is necessary to assure the persons in the refuge alternative are delivered uncontaminated air.

Final paragraph (c)(1)(ii) merged proposed paragraphs (c)(1)(ii) and (iii) and requires fans or compressors to include in-line air-purifying sorbent beds and filters or other equivalent means to assure the breathing air quality and prevent condensation. Further, it requires maintenance instructions that provide specifications for periodic replacement or refurbishment. Sorbent beds and filters and maintenance instructions help assure that the air quality is maintained and condensation is prevented.

One commenter stated that purifying sorbent beds should not be required when systems are not equipped with internal combustion engines. Regardless of whether internal combustion engines are used, in-line air-purifying sorbent beds and filters or other equivalent means are necessary to assure the breathing air quality and to prevent condensation when fans and compressors are used on the surface.

Final paragraph (c)(1)(iii) is redesignated from proposed paragraph (c)(1)(iv) and clarifies that fans or compressors provide positive pressure and an automatic means to assure that the pressure is relieved at 0.18 psi, or as specified by the manufacturer, above mine atmospheric pressure in the refuge alternative.

Positive pressure in the refuge alternative that exceeds total mine pressure will prevent contamination and allow sufficient quantities of breathable air. An automatic means, such as a relief valve, must be provided to assure that the refuge alternative is not over-pressurized when breathable air is supplied. Excessive pressure creates adverse physiological effects. MSHA requested comments on the proposed setting for pressure relief and whether a higher pressure relief should be required.

Some commenters stated that the proposed relief pressure should be modified, especially with inflatable refuge alternatives. Some commenters noted that most steel-type refuge alternatives have pressure relief set at 0.25 psi.

The Foster Miller report specifies a minimum of 5 inches of water gauge overpressure in the refuge alternative which is equivalent to approximately 0.18 psi. Although most manufactured refuge alternatives presently have pressure relief valves set at 0.25 psi, too much pressure differential makes opening doors difficult for persons entering the refuge alternative. The final rule addresses all types of refuge alternatives and clarifies the required setting for pressure relief. For prefabricated units, the pressure must automatically be relieved at 0.18 psi, or as specified by manufacturer, above mine atmospheric pressure. For refuge alternatives consisting of 15 psi stoppings constructed prior to an event, the pressure must automatically be relieved at 0.18 psi above mine atmospheric pressure.

Final paragraph (c)(1)(iv), redesignated from proposed paragraph (c)(1)(v), requires that fans or compressors include warnings to assure that only uncontaminated breathable air is supplied to the refuge alternative. MSHA expects that the warning could be a highly visible tag or label affixed to the supplied air fans or compressors stating that only uncontaminated breathable air may be supplied to the trapped persons in the refuge alternative. Care should be exercised when using compressors in the vicinity of other equipment having gas or diesel internal combustion engines because these engines emit toxic gases, such as carbon monoxide, sulfur dioxide, and nitrogen oxides, which can contaminate the air being supplied by the compressor. In addition, compressors requiring oil can generate carbon monoxide (CO) which can be supplied inadvertently to miners. Oil-type compressors could be used; however, the air quality should be sampled and controlled using carbon monoxide filtration. Oil-less compressors that do not generate carbon monoxide do not require carbon monoxide filtering.

There were no comments related to the proposal. The final rule is unchanged from the proposal.

Final paragraph (c)(1)(v), redesignated from proposed paragraph (c)(1)(vi), requires that fans or compressors include air lines to supply breathable air to the refuge alternative. Final paragraph (c)(1)(v)(A) requires that air lines be capable of preventing or removing water accumulation. This requirement helps prevent the accumulation of water, which could affect the quantity and quality of breathable air provided underground. MSHA understands that coal mines are not entirely horizontal and may contain dips where water can accumulate in the piping. Moisture-laden air should not be piped into the area where miners are trapped. If moisture is not removed, water could accumulate in the refuge alternative. MSHA anticipates air dryers with drain valves will be used. In addition, air lines or pipes that are pre-installed should be capped to prevent the entry of rain or moisture-laden air. If horizontal air lines or pipes are used, they should be provided with a means to automatically drain any water accumulation.

One commenter requested that the proposal be modified to require the applicant to explain how preventing or removing water accumulation will be accomplished, if necessary, because many mines in the southwest desert do not have significant rainfall or humidity.

Regardless of the location of the mine, all compressed air systems must have moisture removal capabilities because all atmospheric air contains water vapor. During compression, air temperature is increased significantly, which allows the air to retain moisture. After compression, air is typically cooled reducing its ability to retain water vapor. A proportion of this water vapor condenses into liquid water which must be removed, for example, by a drain fitted to the compressor after-cooler. The final rule is the same as the proposal.

Under final paragraph (c)(1)(v)(B), air lines must be designed and protected to prevent damage during normal mining operations, a flash fire of 300° Fahrenheit for 3 seconds, a pressure wave of 15 psi overpressure for 0.2 seconds, and ground failure. This requirement provides protection for air lines that come from boreholes or air lines from the surface that are extended underground to a refuge alternative. Operators could achieve protection required under this final rule by burying pipes by through trenching. Trenching would have to be deep enough to protect the pipes from mine traffic, explosions, ground movement, or equipment damage.

One commenter supported the proposal, but stated that it may sometimes be impossible to protect air lines due to geologic conditions. MSHA recommended trenching and burying air

lines as one method of protecting air lines from damage; however, the final rule is performance-oriented, allowing other methods of protecting air lines to be used. The final rule remains unchanged from the proposal.

Final paragraph (c)(1)(vi), redesignated and the same as proposed paragraph (c)(1)(vii), requires that fans or compressors assure that harmful or explosive gases, water, and other materials cannot enter the breathable air. Harmful gases could contaminate filters or other components or collect in the equipment and affect the quality of the air being supplied to trapped miners.

There were no comments on this proposal and the final rule remains the same as the proposal.

Final paragraph (c)(2) clarifies the proposal and requires that redundant fans or compressors and power sources be provided to permit prompt re-activation of equipment in the event of failure. This requirement assures that breathable air will be maintained in the event of failure of one of the sources of breathable air. The final rule clarifies that redundant fans or compressors and power sources are required rather than a ''redundancy of'' fans or compressors and ''each power source'' in the proposal.

There were no comments to this proposal and the final rule is substantively the same as the proposal.

Final paragraph (d), like the proposal, provides requirements for compressed breathable oxygen. Final paragraph (d)(1) requires that compressed breathable oxygen include instructions for activation and operation. This information will assure that persons activating and operating the cylinders have the proper information to correctly perform the task so as to not imperil the lives of persons within the refuge alternative.

One commenter suggested that the operating instructions cover adjustment of oxygen flow to prevent oxygen toxicity in the refuge alternative.

Under the final rule, instructions should include topics such as adjusting oxygen flow rates and checking for loose connections, sounds of leaking gas, damage to hoses along the length or at the fittings, and broken gauges. These instructions assure that compressed air tanks are secure and pressure regulators are properly set and that wrenches and pliers will be in proper working order. Instructions could be developed from sources such as ASTM Stock No.: MNL 36, ''Safe Use of Oxygen and Oxygen Systems: Guidelines for Oxygen System Design, Materials Selection, Operations, Storage, and Transportation.''

The final rule remains the same as the proposed rule.

Final paragraph (d)(2), like the proposal, requires that compressed, breathable oxygen provide oxygen at a minimum flow rate of 1.32 cubic feet per hour per person.

One commenter supported the proposal, but requested clarification of the activity levels that MSHA relied on to support the proposed minimum flow rate.

MSHA relied on the activity levels stated in PIB P07–03, which contains breathing rates and calculations for persons who need to use a refuge alternative. No commenters opposed the proposal. The final rule remains the same as the proposed rule.

Final paragraph (d)(3), like the proposal, requires that compressed breathable oxygen include a means to readily regulate the pressure and volume of the compressed oxygen. Regulating compressed breathable oxygen is necessary to assure that oxygen levels remain within the recommended values. In addition, all oxygen valves should be opened slowly to prevent the oxygen from heating.

One commenter agreed and no commenters opposed the proposal. The final rule remains the same as the proposed rule.

Final paragraph (d)(4), like the proposal, would require that compressed breathable oxygen include an independent regulator as a backup in case of failure. It is crucial to maintain a continuous supply of breathable air to persons trapped underground.

Some commenters opposed the proposal. These commenters stated that backup regulators are not necessary because these devices have been used for decades with an excellent safety record and minimal failure. Some commenters also stated that the proposal would require additional piping and fittings which would increase the risk of oxygen leaks.

A backup regulator assures that breathable air will be maintained during an emergency. Based on MSHA's review of literature and system analyses, MSHA notes that there is the potential for failure and instances where regulators have failed. Persons who need to use the refuge alternative must be able to rely on oxygen regulators for survival. If a regulator fails during an emergency, it would take too much time and would be too difficult to repair and re-establish breathable air especially if persons inside the unit are injured. In addition, based on MSHA's review of costs, the Agency believes that the cost of a backup regulator is small compared to the cost of an entire unit. Further, the Agency believes that there is no additional risk of an oxygen leak because these regulators are safe to use and must be checked periodically to assure that they will function properly. Accordingly, backup regulators must be provided. The final rule remains the same as the proposed rule.

Final paragraph (d)(5), like the proposal, requires that compressed breathable oxygen be used only with regulators, piping, and other equipment that is certified and maintained to prevent ignition or combustion. A compressed breathable oxygen system should not be used with a previously used compressed air system because a fire or explosion could occur when pure oxygen contacts oil and grease from the previously used compressed air system.

One commenter supported the proposal. One commenter opposed the requirement for certified equipment and materials that are used downstream of the regulator because the equipment and materials carry oxygen that is not under high pressure and, therefore, is not a hazard. Based on MSHA's experience, the Agency believes that there is a risk of fire or explosion for all oxygen supply piping and equipment and, therefore, it is necessary that the equipment and materials be certified. The final rule remains the same as the proposal.

In the final rule, MSHA has moved proposed § 7.506(e) and (f) addressing carbon dioxide removal components' instructions and testing to final § 7.508(a), (b), and (c) addressing harmful gas removal components. This move places all the instructions and testing requirements for harmful gas removal in the same section (discussed later in this preamble).

The final rule does not include proposed § 7.506(g), which addressed the use of respirators as a breathable air component. Proposed paragraph (g)(1) would have required respirators or breathing apparatus to be NIOSH-approved with a means of flow and pressure regulation. Proposed paragraph (g)(2) would have required that respirators or breathing apparatus be equipped with fittings that connect only to a breathable air compressed line. Proposed paragraph (g)(3) would have required that respirators or breathing apparatus allow for communication, and the provision of food and water while preventing the entry of any outside atmosphere. Proposed paragraph (g)(4) would have required that respirators or breathing apparatus be capable of being worn for up to 96 hours.

Several comments opposed the use of respirators, citing uncertainties regarding the wearing of respirators for

prolonged periods. They also questioned how the respirator type system would provide refuge.

After reviewing the comments, MSHA considered possible adverse effects that might be associated with respirator use and determined that this provision should not be included in the final rule. The use of respirators for 96 hours may present medical problems, such as lung damage due to lack of humidity or poisoning due to skin exposure to toxic gases. In addition, the use of masks would require special individual fitting to prevent leakage. Further, injured persons may not physically be able to don the mask. Accordingly, the final rule does not include the use of respirators as a breathable air component.

Final paragraph (e) is redesignated from and clarifies proposed paragraph (h) and requires that an applicant prepare and submit an analysis or study demonstrating that the breathable air component will not cause an ignition. The final rule clarifies MSHA's intent that an analysis or study should evaluate the potential fire and ignition risks of breathable air components, equipment, or materials. Final paragraph (e)(1) requires that the analysis or study specifically address oxygen fire hazards and fire hazards from chemicals used for removal of carbon dioxide. Final paragraph (e)(2) requires that the analysis or study identify the means used to prevent any ignition source. These requirements minimize or prevent the inherent potential fire hazard from oxygen and the fire hazards from chemicals used for removal of carbon dioxide. Applicants should analyze inherent potential fire hazards and include a mitigation plan to minimize or prevent ignition of breathable air component equipment or materials.

One commenter supported the proposal, stating that the analysis should be completed to assure all potential fire and ignition risks are analyzed and addressed by design. Another commenter suggested that there should be a Material Safety Data Sheet (MSDS) on everything within the refuge alternative because MSDSs have all the information requested in a form familiar to users.

Under the final rule, fire and ignition hazards must be analyzed and addressed in the breathable air component design; however, applicants may provide MSDSs for persons using refuge alternatives. While the language has been changed slightly, the final rule requirements are the same as the proposal.

Proposed paragraph (i), concerning fire extinguishers, is moved to final § 7.504(c)(6).

Section 7.507 Air-Monitoring Components

Final § 7.507(a), like the proposal, requires that each refuge alternative have an air-monitoring component that provides persons inside with the ability to determine the concentrations of carbon dioxide, carbon monoxide, oxygen, and methane, inside and outside the structure, including the airlock. The ability to monitor these gases inside the refuge alternative is critical to the survival of persons occupying the refuge alternative. For example, monitoring methane minimizes possible oxygen deficiency or explosion. In addition, the ability to monitor the atmosphere outside the refuge alternative assists persons inside the refuge alternative in making crucial decisions regarding rescue and evacuation.

One commenter stated that the air monitoring component should be portable and permit use inside and outside the refuge alternative. The final rule does not specify that the air monitoring component has to be either portable or fixed nor does it state that only electronic type instruments be used. Any measurements taken outside the refuge alternative should be through ports that prevent contamination of the refuge alternative. Under the final rule, monitoring outside the refuge alternative should be periodic, as needed, and would not need to be continuous. Pumps attached to hoses could be used to safely draw samples from outside the refuge alternative.

One commenter supported the proposal to monitor the outside atmosphere while another commenter opposed the proposal, stating that persons should stay in the refuge alternative until rescued. MSHA believes that the measurement of the outside atmosphere will be important so that refuge alternative occupants will have necessary information to relay to rescuers on the surface and make crucial decisions regarding evacuation. MSHA reiterates the longstanding principle in mine rescue that miners should first attempt to evacuate the mine, and if evacuation is impossible, then retreat to the refuge alternative.

One commenter stated that part 75 did not have a comparable monitoring requirement. This is not correct; the emergency response plan provision in part 75 requires monitoring inside and outside the refuge alternative.

One commenter stated that the airlock monitoring requirement should be eliminated. The Agency believes that the monitoring of all the inside atmosphere, including the airlock, is necessary because persons occupying the refuge alternative will be accessing the airlock. The final rule remains as proposed.

Final § 7.507(b), like the proposal, requires that refuge alternatives designed for use in mines with a history of harmful gases, other than carbon monoxide, carbon dioxide, and methane, be equipped to measure those harmful gas concentrations. Some mines have a history of liberating harmful gases such as hydrogen sulfide, volatile hydrocarbons, or sulfur dioxide. The ability to detect and measure harmful gases is necessary for the safety of the persons using the refuge alternative.

A commenter requested that the final rule specify each gas that would need to be monitored because monitors are gas specific. Under the final rule, the Agency intends that refuge alternatives designed for use in mines with a history of harmful gases, other than those mentioned, must be equipped to measure the gases encountered. Manufacturers will know the conditions in the mines in which their refuge alternatives will be used. The final rule remains as proposed.

Final § 7.507(c), like the proposal, requires that the air-monitoring component be inspected or tested and the test results be included in the application. This requirement assures that the monitors or detectors are suitable for and will perform under mining conditions. Air monitoring component must be approved as intrinsically safe or permissible in accordance with the general requirements for approval of refuge alternative components under § 7.504(a)(1).

MSHA received no comments on the proposal. The final rule is the same as the proposal.

In the final rule, MSHA has included proposed § 7.507(d), addressing air-monitoring component approval numbers in the approval application, in final § 7.503(2)(i), which addresses application requirements.

Final § 7.507(d), redesignated from proposed § 7.507(e), like the proposal, addresses requirements for air-monitoring components. Final paragraph (d)(1) requires that the total measurement error, including the cross-sensitivity to other gases, not exceed ±10 percent of the reading, except as specified in the approval. Gas analyzer specifications under existing part 7, concerning diesel engine approvals under existing § 7.86(b)(9), specify the gas analyzer instrument error, including

cross-sensitivity to other gases, as ±5 percent. The ±10 percent accuracy in this final rule allows for random and systematic errors in measurement. It is important to control the measurement error and cross-sensitivity because of the uncertainty inherent with the instrument and measurement, and the need for reproducibility of the instrument measurements. This final requirement is necessary to assure the readings taken by persons in the refuge alternative verify that the air is breathable and does not have the potential for fires and explosions.

MSHA did not receive comments on this provision. The final rule remains the same as the proposal.

Final paragraph (d)(2), redesignated from paragraph (e)(2), like the proposal, requires that the measurement error limits not be exceeded after start-up, after 8 hours of continuous operation, after 96 hours of storage, and after exposure to atmospheres with a carbon monoxide concentration of 999 ppm (full-scale), a carbon dioxide concentration of 3 percent, and full-scale concentrations of other gases. Full-scale concentrations are those at the upper limit of the air monitoring instrument's capability to measure accurately within the instrument's error factor.

This requirement allows persons using gas monitors or detectors to determine accurate gas concentrations throughout the duration of occupancy in the refuge alternative and at different parameters such as startup, after 8 hours of continuous operation, during storage when continuously exposed to the maximum recommended gas concentrations, and at other concentrations much higher than the recommended maximum values. It takes into account the effects high gas concentration levels may have on these measurements over extended periods of time. For example, MSHA reviewed the ANSI standard for carbon monoxide detection instruments to evaluate the performance testing of instruments at different levels of carbon monoxide, including high levels.

A commenter stated that the proposed concentration of 999 ppm for carbon monoxide was too high and that the wording of the provision was unclear. MSHA reviewed data from previous accidents and found that a carbon monoxide concentration of 999 ppm may exist following an explosion or fire. It is necessary to evaluate the effects of the higher concentrations on the instruments because the higher limits may exist prior to purging the airlock. The carbon monoxide limit for the atmosphere inside the refuge alternative is 25 ppm. After considering the comments, the Agency has determined that the final rule should remain the same as the proposal.

Final paragraph (d)(3), redesignated from proposed paragraph (e)(3), like the proposal, requires that calibration gas values be traceable to the National Institute for Standards and Technology (NIST) ''Standard Reference Materials'' (SRMs). This requirement, which is based on existing § 7.86(b)(16), assures that the air-monitoring equipment is properly calibrated. The NIST SRMs are recognized and accepted industry standards. There were no comments to the proposal. The final rule is the same as the proposal.

Final paragraph (d)(4) merged proposed paragraphs (e)(4) and (e)(5) and requires that the analytical accuracy of the calibration gas and span gas values be within 2.0 percent of NIST gas standards. This requirement is based on existing § 7.86(b)(16) and (17), which also reference analytical accuracy of calibration gases within 2.0 percent of NIST gas standards.

There were no comments on the proposal. The final rule is substantively the same as the proposal.

Final paragraph (d)(5), redesignated from proposed paragraph (e)(6), like the proposal, requires that the detectors must be capable of being kept fully charged and ready for immediate use. This requirement assures that persons using refuge alternatives have detectors that are reliable and ready for use.

One commenter stated that keeping the detector batteries charged requires too much maintenance. The final rule requires that the methods of charging and calibrating be stated in the emergency response plan. It is imperative that the detectors be inspected and ready for immediate use in the event of an emergency that requires using the refuge alternative. After considering the comments, the final rule remains the same as the proposal.

Section 7.508 Harmful Gas Removal Components

Final § 7.508, like the proposal, provides requirements for harmful gas removal. Final paragraph (a)(1) requires that purging or other effective procedures be provided for the airlock to dilute the carbon monoxide concentration to 25 ppm or less and the methane concentration to 1.0 percent or less as persons enter, within 20 minutes of persons deploying the refuge alternative.

Some commenters opposed the 25 ppm carbon monoxide limit and suggested a limit of 50 ppm. One commenter stated that a 50 ppm level will reduce the required time in the airlock and allow persons to enter the refuge main chamber more quickly. This commenter added that further dilution will occur between the airlock and the main chamber of the refuge alternative estimating that the time it takes to reach 50 ppm will be 25 percent shorter than the time it takes to reach 25 ppm.

MSHA understands that the airlock may contain carbon monoxide concentrations as high as 50 ppm when persons are entering the refuge alternative. The carbon monoxide concentration of 50 ppm recommended by some commenters is generally based on an 8-hour exposure per day. However, after all persons have entered the refuge alternative, the interior of the refuge alternative, including the airlock, must be maintained at 25 ppm or less because, under the final rule, the airlock is usable space that persons may occupy. MSHA reviewed other standards pertaining to carbon monoxide exposure, and considered that persons could be entrapped for periods up to 96 hours. For these reasons, the final rule remains at 25 ppm for carbon monoxide, since the Agency believes that the interior space of the refuge alternative must be maintained at this level. This carbon monoxide limit is consistent with the NIOSH report. The methane concentration limit has been changed from the proposal to be consistent with existing standards governing methane limits.

One commenter stated that MSHA should clarify that purge air must be in addition to the 96 hours of breathable air that each person must have. Under the final rule, MSHA intends that the air that is used to purge the airlock must be in addition to the breathable air needed to sustain persons for 96 hours.

One commenter stated that the entire interior, and not just the airlock, should be purged. The final rule, like the proposal, provides that refuge alternatives should be configured to assure that the inside air is isolated from the mine atmosphere, which minimizes the quantity of purge air needed to purge the interior space. An airlock, which provides a transition area between the mine atmosphere and the refuge alternative's interior space, minimizes contamination of the interior space. Therefore, airlocks need to be capable of removing contaminants or configured in a way that assures that contaminated mine atmosphere is prevented from migrating through the airlock into the interior space of the refuge alternative. This requirement assures that contaminated air is forced

out of the refuge alternative. Purge air should be provided from compressed air cylinders.

Another commenter stated that purging the airlock within 20 minutes of persons activating the refuge alternative is an excessive amount of time. Based on MSHA's experience, the Agency believes that 20 minutes to purge the airlock and to establish a breathable air atmosphere is appropriate and necessary.

One commenter requested clarification of the initial concentration of methane so that purge air volumes can be computed. The final rule does not specify an initial concentration of methane, but the Agency expects that the initial test concentration, prior to purging, should be a minimum of 12 percent.

Another commenter stated that MSHA should specify that all flow rates be defined at ''Standard Temperature and Pressure'' (STP) conditions, ''including the assumptions of CO_2 production from humans.'' The Agency contacted an author of the Foster Miller Report and determined that 60 °F was used as the standard temperature and that there is general agreement that 14.7 psi is the standard pressure at 1 atmosphere. Because approved permissible electrical components may be present in the refuge alternative, in the final rule, the proposed 1.5 percent concentration of methane was reduced to 1.0 percent to be consistent with existing § 75.323(b)(1)(i) and (ii).

Final paragraph (a)(2), like the proposal, requires that chemical scrubbing or other effective procedures be provided so that the average carbon dioxide concentration in the occupied structure does not exceed 1.0 percent over the rated duration and excursions do not exceed 2.5 percent. Carbon dioxide is an asphyxiant produced by human respiration. The carbon dioxide concentration limit is consistent with the NIOSH report.

To prevent the accumulation of harmful concentrations of carbon dioxide, scrubbing systems have been developed to chemically absorb the carbon dioxide. Carbon dioxide scrubbing systems may be active or passive. Passive systems rely solely on natural air currents for the air to react with the chemical bed. Passive system chemicals are usually packaged in curtains. These curtains would be suspended in the refuge chamber. Active systems force air through a chemical bed by fans or compressed air, and are generally more efficient than passive systems.

One commenter supported and no commenters opposed the proposal. The final rule is the same as proposed with one editorial change.

Final paragraph (a)(2)(i), redesignated from proposed § 7.506(e)(2), like the proposal, requires that carbon dioxide removal components be used with breathable air cylinders or oxygen cylinders. Carbon dioxide removal components must be compatible with the overall system for providing breathable air. The carbon dioxide removal systems are dependent on the occupancy and volume of the refuge alternative. The breathable air system is also dependent on those same factors.

One commenter supported and no commenters opposed the proposal. The final rule is the same as proposed.

Final paragraph (a)(2)(ii), redesignated from proposed § 7.506(e)(3), like the proposal, requires that carbon dioxide removal components remove carbon dioxide at a rate of 1.08 cubic feet per hour per person. As stated previously, MSHA is assuming that breathing rates for persons who have reached refuge alternatives reflect activity levels of 4/5 at rest and 1/5 moderate activity. Therefore, using the respiratory quotient, which is the ratio of CO_2 expelled to O_2 consumed, the average carbon dioxide generation is 1.08 cubic feet per hour per person. These breathing rates were based on the Foster Miller report.

One commenter supported and no commenters opposed the proposal. The final rule is the same as proposed with one editorial change.

Final paragraph (a)(3), redesignated from proposed § 7.506(e)(1), requires that harmful gas removal components must include instructions for deployment and operation. The final rule clarifies that instructions are required for harmful gas removal components, which include carbon dioxide removal components.

One commenter supported and no commenters opposed the proposal. The final rule is substantively the same as the proposal.

Final paragraph (b), like the proposal, addresses requirements for each chemical used for removal of harmful gas. Final paragraph (b)(1), like the proposal, requires that each chemical for removal of harmful gas be contained such that when stored or used it cannot come in contact with persons and it cannot release airborne particles. This provision is consistent with the NIOSH report which stated that the scrubbing material must not become airborne or otherwise cause respiratory distress or other acute reaction.

Because harmful gas removal chemicals are caustic, each would need to be contained. One way of packaging these chemicals is in curtains or cartridges that are isolated so that contact with or exposure to the chemicals is prevented. For example, commonly used CO_2 removal systems include lithium hydroxide or soda lime curtains or soda lime cartridges. These curtains or cartridges assure that persons do not contact the caustic chemicals, which can cause burns. Chemicals must be activated without compromising the packaging materials and exposing persons to chemical hazards.

MSHA received no comments on this proposal. The final rule includes proposed § 7.506(e)(4), concerning carbon dioxide removal components, and contains editorial changes, but remains substantively the same as the proposal.

Final paragraph (b)(2) requires that each chemical used for removal of harmful gas be provided with all materials; parts, such as hangers, racks, and clips; equipment; and instructions necessary for its deployment and use. Depending on the type of CO_2 removal system, instructions could include deployment and proper handling of materials. These instructions would assure that mine operators have the proper information to correctly perform tasks involving carbon dioxide removal components. This provision clarifies the proposal and will expedite deployment of the scrubbing system to reduce start-up time and make the system easy to use for the occupants. MSHA's intent is that the steps required to deploy the harmful gas removal component should not be difficult and should be designed on a per-person incremental basis to make the system easily understood by occupants.

MSHA received no comments on the proposal. The final rule includes proposed § 7.506(e)(1) and (5) concerning carbon dioxide removal components, but remains substantively the same as the proposal.

Final paragraph (b)(3), like the proposal, requires that each chemical used for removal of harmful gas be stored in an approved container that is conspicuously marked with the manufacturer's instructions for disposal of used chemicals. This requirement assures appropriate containment during shipping and storage. MSHA's intent is that an approved container is one that is accepted under general chemical industry practice and appropriate for pre-deployment transport and storage. Deployment and disposal instructions should be provided to assure persons are not exposed or otherwise injured while handling chemicals.

MSHA received no comments on the proposal. The final rule includes proposed § 7.506(e)(6) concerning carbon dioxide removal components, but remains substantively the same as the proposal.

Final § 7.508(c), like the proposal, provides requirements for testing each harmful gas removal component to determine its ability to remove harmful gases. Final paragraph (c)(1) requires that the component be tested in a refuge alternative structure that is representative of the configuration and maximum volume for which the component is designed. The requirement assures that the test results are representative of actual conditions.

A commenter stated that purging a contaminated space should not be an accepted practice unless the purging process can be proven totally effective at providing a safe, livable atmosphere for all of the occupants in every situation. Under the final rule, test results should confirm that purging or scrubbing is effective in removing harmful gases. If the data are from small-scale tests or prototype testing, interpretations and assumptions should represent full-scale performance.

One commenter supported the proposal. The final rule makes editorial changes, but is substantively the same as proposed.

Final paragraph (c)(1)(i), like the proposal, requires that the test include three sampling points located vertically along the centerlines of the length and width of the structure and equally spaced over the horizontal centerline of the height of the structure. The required sampling points assure an accurate representation of the gas concentration found in the middle of the structure as opposed to the ends, corners, top, sides, or bottom.

MSHA did not receive comments on the proposal; the final rule is the same as the proposal.

Final paragraph (c)(1)(ii), like the proposal, requires that the structure be sealed airtight. This requirement helps prevent contamination which could interfere with the testing. MSHA did not receive comments on the proposal; the final rule is the same as the proposal.

Final paragraph (c)(1)(iii), like the proposal, requires that the operating gas sampling instruments be placed inside the structure and continuously exposed to the test atmosphere. This requirement is necessary to assure that the instruments operate as designed in the actual space and representative atmosphere including higher temperatures and humidity.

A commenter stated that the electronics of some precision carbon dioxide analyzers can be affected by high temperature and humidity and can negatively impact analyzer accuracy. MSHA intends that the tests required by the final rule will verify the accuracy of the instruments in high temperature and high humidity to assure that measurements are accurate.

One commenter recommended that as an alternative, the final rule permit external analyzers and require that these analyzers have a response time of less than 1.5 minutes and that a minimum 99.5% of sampled gases be returned into the refuge alternative. An external analyzer would be inappropriate for tests requiring the monitors to be exposed to the inside atmosphere. However, an external analyzer would be acceptable as a supplemental testing instrument for this test. MSHA would allow for tests of gas monitoring components to be simultaneous with the harmful gas removal tests.

After evaluating the comments, MSHA has determined that the final rule should remain the same as the proposal.

Final paragraph (c)(1)(iv), like the proposal, requires that the sampling instruments simultaneously measure the gas concentrations at the three sampling points. Simultaneous sampling helps determine the interior atmosphere at different locations at a given point in time, eliminates any sampling variability introduced by sequential sampling, and determines if a homogenous atmosphere is maintained throughout the refuge alternative.

MSHA received no comments on the proposed provision; the final rule is the same as the proposal.

Final paragraph (c)(2) is substantively the same as the proposal and requires that when testing the component's ability to remove carbon monoxide, the structure be filled with a test gas of either purified synthetic air or purified nitrogen that contains 400 ppm carbon monoxide, ±5 percent. The final rule includes the ±5 percent to be consistent with final paragraph (c)(2)(i). The 400 ppm testing concentration was selected based on the American Conference of Industrial Hygienists (ACGIH) Short Term Exposure Limit (STEL). The test should determine the performance of the gas purification/decontamination system in achieving gas concentration level reductions for the entire ingress/egress process at maximum occupancy. MSHA received no comments on the proposal.

Final paragraph (c)(2)(i), like the proposal, requires that, after a stable concentration of 400 ppm, ±5 percent, carbon monoxide has been obtained for 5 minutes at all three sampling points, a timer be started and the structure purged or CO otherwise removed. The stabilization of the concentration will assure that gas is distributed throughout the structure and the test is properly performed.

MSHA received no comments on the proposed provision; the final rule is the same as the proposal. Comments related to the ending concentration were addressed earlier in the harmful gas removal section.

Final paragraph (c)(2)(ii), like the proposal, requires that the carbon monoxide concentration readings from each of the three sampling instruments be recorded every 2 minutes. This requirement assures that there are sufficient data points to constitute a valid test. Recording should continue until stabilization is reached at the lowest concentration.

MSHA received no comments on the proposed provision; the final rule is the same as the proposal.

Final paragraph (c)(2)(iii), like the proposal, requires that the time be recorded from the start of harmful gas removal until the readings of the three sampling instruments all indicate a carbon monoxide concentration of 25 ppm or less. This requirement assures that the time to remove carbon monoxide and deploy the refuge alternative is less than the time to deplete the SCSR. All occupants should be able to be located safely inside the refuge alternative prior to depletion of their SCSRs.

Comments related to the 25 ppm concentration were addressed earlier in this section. The final rule makes editorial changes, but is substantively the same as the proposal.

Final § 7.508(c)(3), redesignated from proposed § 7.506(f), requires that the carbon dioxide removal component be tested to demonstrate that it can maintain average carbon dioxide concentration at 1.0 percent or less, with excursions not to exceed 2.5 percent under the following conditions: (i) at 55 °F (±4 °F), 1 atmosphere (±1 percent), and 50 percent (±5 percent) relative humidity; (ii) at 55 °F (±4 °F), 1 atmosphere (±1 percent), and 100 percent (±5 percent) relative humidity; (iii) at 90 °F (±4 °F), 1 atmosphere (±1 percent), and 50 percent (±5 percent) relative humidity; (iv) at 82 °F (±4 °F), 1 atmosphere (±1 percent), and 100 percent (±5 percent) relative humidity. MSHA uses the standard error terminology of ±5 percent, but recognizes that +5 percent does not apply to relative humidity at 100 percent. This requirement is consistent with the NIOSH report.

Some CO_2 scrubbing components may not perform as well as others. The most commonly used CO_2 scrubbing chemicals performed within an acceptable range in underground mines. Testing under final paragraphs (c)(3)(i) through (iv) represents extreme conditions that CO_2 scrubbing components may be exposed to in underground coal mines. The increased temperature and humidity ranges reflect increases in the occupancy of a refuge alternative, although MSHA assumes that some body heat and moisture generation will be dissipated through the refuge alternative into the mine air, roof, ribs, and floor. Testing and evaluation of the CO_2 scrubbing components will enable mine operators to make informed choices in selecting scrubbing components.

One commenter stated that there is difficulty in controlling humidity to these extremely tight tolerances and that there is difficulty in measuring relative humidity to the required level of precision in the proposed rule. The commenter added that very high quality chilled mirror humidity sensors are typically unable to measure 100 percent relative humidity to 5 parts in 1,000. Other comments included questions concerning the temperatures and if they were starting values only, and if the four temperatures were to be maintained throughout the test. Another comment recommended that the requirements specify that the addition of water vapor into the testing chamber be maximized at the metabolic rate being simulated.

The proposed tolerances for humidity were based on an instrument specification and not a measurement specification. However, based on comments, MSHA believes that there could be difficulty in measuring relative humidity to the proposed level of precision. Therefore, MSHA has changed the proposed tolerances for relative humidity to ±5 percent.

Under the final rule, MSHA has not changed the proposed tolerances for temperature. Temperature must be measured inside the refuge alternative, and held constant within the tolerances of ±4 °F. Tests should simulate the occupancy and accurate metabolic rates per number of persons.

Final paragraph (c)(4) is new and requires that testing demonstrate the component's continued ability to remove harmful gases effectively throughout its designated shelf-life, specifically addressing the effects of storage and transportation.

One commenter requested that the harmful gas removal component be subjected to shock testing prior to approval. In response to this comment, MSHA believes that there may be potential chemical degradation associated with time, transport, and environmental conditions. The final rule, however, does not include a specific requirement for shock testing. Instead, it includes a performance-oriented requirement that testing demonstrate the component's continued ability to remove harmful gases effectively throughout its designated shelf-life.

Final paragraph (d), like the proposal, provides that alternate performance tests may be conducted if the tests provide the same level of assurance of the harmful gas removal component's capability as the tests specified in this final rule. If the applicant plans to use alternate tests, they must be specified in the approval application. The applicant must demonstrate that the alternate tests will assure the same degree of protection as that provided in this final rule. There were no comments on the proposal; the final rule is the same as the proposal.

Section 7.509 Approval Markings

Final § 7.509(a), like the proposal, requires that each approved refuge alternative or component be identified by a legible, permanent approval marking that is securely and conspicuously attached to the component or its container. The marking should be placed to avoid damage or removal.

Final § 7.509(b) clarifies the proposal and requires that each approval marking be inscribed with the component's MSHA approval number, and any additional markings required by the approval. The final rule clarifies MSHA's intent that the approval marking be ''inscribed with the component's MSHA approval number'' rather than ''include the refuge alternative's and component's MSHA approval number''. In addition, the final rule does not include the proposed expiration date.

Final paragraphs (a) and (b) assure that only approved materials and components are used in refuge alternatives. MSHA did not receive any comments on the proposal. The final rule makes clarifications, but is substantively the same as the proposal.

Final § 7.509(c), like the proposal, requires that each refuge alternative structure provide a conspicuous means for indicating an out-of-service status, including the reason it is out of service. This requirement will provide information necessary for maintenance and repair.

MSHA did not receive any comments on the proposal. The final rule is the same as the proposal.

Final paragraph § 7.509(d), like the proposal, requires that the airlock be conspicuously marked with the recommended maximum number of persons that can use it at one time. This requirement assures that the airlock will be used as intended to allow safe passage of persons and to prevent any contamination of the interior space atmosphere.

MSHA did not receive any comments on the proposal. The final rule is the same as the proposal.

Section 7.510 New Technology

Final § 7.510, like the proposal, provides that MSHA may approve a refuge alternative or a component that incorporates new knowledge or technology, if the applicant demonstrates that the refuge alternative or component provides no less protection than those meeting the requirements of the final rule. Because some aspects surrounding the use of refuge alternatives involve developing technology, MSHA believes that innovations in technology will continue, resulting in further improvements in miner safety and health. The final rule would permit applicants to incorporate technological improvements so long as they provide equivalent protection to that in the final rule.

MSHA believes that credible scientific research supports the use of refuge alternatives. Refuge alternatives are technologically feasible. They use commercially available technology that can reasonably be integrated into most coal mining operations dependent upon specific physical characteristics of the mine. MSHA recognizes that using refuge alternatives in low coal mines could be problematic. Certain types of refuge alternatives may not be feasible in low coal mines. During the rulemaking process and at each of the public hearings, MSHA specifically solicited comment on the use of refuge alternatives in low coal mines, and asked that commenters be specific including alternatives, rationale, safety benefits to miners, technological and economic feasibility, and supporting data.

One commenter stated that miners at low coal mines deserve the same protection as those working in high seams. Another commenter stated that prefabricated units are available as short as 27 inches for low coal. The NIOSH report stated that ''it may be impractical to implement viable refuge alternatives in the few mines that operate in very

low coal, e.g., less than 36 inches.'' In response to commenters' concerns regarding the ability to maneuver, deploy, or use larger units in mines with low seam heights, the final rule has changed the proposed volume requirements to take mining height into consideration.

MSHA believes that the requirements in the final rule are feasible. Refuge alternatives are currently being manufactured for, and some are currently in place in, underground coal mines. The Agency will continue to work with NIOSH and the mining community as refuge alternative technology continues to evolve and will inform the mining community of any changes in technology. MSHA recognizes that it may not be feasible in every case to install a refuge alternative in accordance with all of the requirements in the final rule. In addition, MSHA recognizes that some aspects of refuge alternatives involve developing technology, for example, wireless communications facilities and means of controlling the temperature inside refuge alternatives.

All refuge alternative components are currently available. MSHA may approve refuge alternatives or components that incorporate new technology, if the applicant demonstrates that the refuge alternative or components provide no less protection than those meeting the requirements of the final rule.

B. Part 75 Safety Standards

Section 75.221 Roof Control Plan Information

Final § 75.221(a)(12), like the proposal, requires that the operator describe the roof and rib support necessary for the refuge alternative in the roof control plan. Some commenters supported the proposal. Other commenters stated that the roof support specified in the mine's roof control plan should be sufficient and that additional roof support may not be necessary in all cases.

Roof and rib falls could damage a refuge alternative and compromise its integrity. Humidity, fire, vibration, shock, and thermal effects may require the use of additional roof support for areas housing refuge alternatives. Due to the vital role of refuge alternatives in the event of an emergency, mine operators must plan for their location and assure that they are adequately protected from possible roof and rib falls. MSHA encourages the mine operator to prepare locations for refuge alternatives in advance. If additional roof or rib support is needed to protect these units at the selected locations, the operator must describe it in the mine's roof control plan. MSHA agrees that with proper advance planning, additional roof support may not be necessary in all cases. The final rule requires additional support, if necessary. If the roof support in the operator's existing plan is sufficient to protect the refuge alternative, the operator must so state.

Section 75.313 Main Mine Fan Stoppage With Persons Underground

Final § 75.313(f) clarifies the proposal and requires that any electrical components exposed to the mine atmosphere be approved as intrinsically safe for use during fan stoppages. It also requires that any electrical components located inside the refuge alternative be either approved as intrinsically safe or approved as permissible for use during fan stoppages.

Commenters generally supported the proposal that electric-powered components operated during fan stoppages be intrinsically safe. Some suggested that permissible electrical equipment that is located inside the refuge alternative also be allowed to operate during fan stoppages.

Mine explosions, mine fires, and coal bumps and bounces may compromise the mine ventilation system resulting in a mine fan stoppage. A refuge alternative that is normally located in intake air may be exposed to a potentially explosive mixture of methane in the aftermath of a mine emergency. Similar to existing § 75.313(e), the final rule clarifies MSHA's intent that only approved intrinsically safe electrical components that are exposed to the mine atmosphere are allowed to be operated during fan stoppages. However, electrical components that are located inside the refuge alternative would not be exposed to an explosive mixture of methane. The atmosphere inside the refuge alternative is isolated, secure, and monitored for harmful gases. Therefore, after considering comments, the final rule clarifies MSHA's intent by including a provision that electrical components located inside the refuge alternative be either approved as intrinsically safe or approved as permissible for use during fan stoppages.

Section 75.360 Preshift Examination at Fixed Intervals

Final § 75.360(d) makes an editorial change, but is substantively the same as the proposal. It requires that the person conducting the preshift examination check the refuge alternative for damage, the integrity of the tamper-evident seal and the mechanisms required to deploy the refuge alternative, and the ready availability of compressed oxygen and air.

During the rulemaking process and at all the public hearings, MSHA requested specific comments on the visual damage that would be revealed during the preshift examinations, and asked that commenters be specific including alternatives, rationale, safety benefits to miners, technological and economic feasibility, and supporting data. The Agency was concerned with the feasibility and practicality of visually checking the status of refuge alternatives without having to enter the structure or break the tamper-evident seal.

Commenters supported examinations of refuge alternatives, but offered differing opinions on the extent and frequency of these examinations. Some commenters supported preshift examinations, while others supported weekly examinations, examinations following relocation, or examinations based on the manufacturer's recommendations. In addition, some commenters favored examinations of the exterior and some of the interior components based on the design, while others favored only exterior examinations.

Most commenters agreed with MSHA that refuge alternatives may be damaged by persons, mining equipment, or the mine environment. Damage may also occur when the unit is moved. Damage could consist of sheared bolts or dents which affect the proper functioning of the unit. Also, compressed gas storage systems may leak.

Due to the critical purpose of refuge alternatives, the final rule requires that refuge alternatives be examined as part of the preshift examination. Because preshift examinations occur on a routine basis, they will assure that potentially dangerous conditions are detected and corrected before refuge alternatives are used and that the refuge alternatives are operational when needed.

Some commenters requested clarification of the extent or degree of the examination. Under this final rule, the preshift examination consists of an examination of the complete structure that is made without entering the unit to detect visible damage to the refuge alternative structure and damage to the tamper-evident seal. The examination includes observing the gauges showing the ready availability of compressed oxygen and air. The examination should include observing the battery status and testing the communications system. If the preshift examination reveals that the tamper-evident seal or other evidence indicates unauthorized entry or tampering, further examination of the refuge alternative and components

should be conducted to assure that the unit, components, and provisions are not damaged and that components and provisions are not missing. Following this examination, the seal or other means should be immediately replaced.

Section 75.372 Mine Ventilation Map

Final § 75.372(b)(11), like the proposal, requires that the location of all refuge alternatives be shown on the mine ventilation map. Some commenters supported the proposal. One commenter opposed the proposal stating that the location of each refuge alternative should only be indicated on the escapeway map.

This requirement facilitates an evaluation of the effectiveness of a potential refuge alternative location. The location of the refuge alternative in relationship to potential hazards such as seals and oil and gas wells will be evaluated during the ventilation map review. The mine ventilation map is often used as a reference during mine rescue efforts. Plotting refuge alternatives on the ventilation map and knowing their accurate locations could aid decisions during rescue operations.

Section 75.1200–1 Additional Information on Mine Map

In the final rule, MSHA has added new § 75.1200–1(n) to clarify the proposal that the locations of refuge alternatives are additional information that must be shown on the mine maps required under existing § 75.1200. Commenters generally supported including this information on the mine map. One commenter stated that the mine communication system and its relationship to the location of each refuge alternative should be identified on the official mine map every time that either is relocated. The commenter also stated that the refuge alternative location should be posted on the mine map no later than the end of the shift following relocation. One commenter opposed the proposal stating that the refuge alternatives should only be indicated on the escapeway map.

The existing § 75.1200 mine map forms the basis for decisions made during mine rescue efforts. Plotting refuge alternatives on the mine map allows the mine rescue decision makers to determine where miners may be sheltered after a mine emergency. This information will be critical to mine rescue personnel in locating trapped persons. Because each refuge alternative must have a communication facility that is part of the mine communication system, this final rule does not include a provision requiring the mine communication system to be identified on the mine map relative to the location of each refuge alternative every time that either is relocated. Moreover, existing § 75.1202–1 already requires that the mine map be kept up-to-date by temporary notations. Final § 75.1200–1(n) addressing the location of refuge alternatives on the mine map is added to be consistent with other requirements in part 75.

Section 75.1202–1 Temporary Notations, Revisions, and Supplements

Final § 75.1202–1(b)(4), like the proposal, requires the new location of a refuge alternative to be shown on the mine map with temporary symbols each time it is moved. MSHA received one comment supporting this proposal.

Knowing the locations of refuge alternatives is critical to effective decision-making during rescue operations; refuge alternatives must be kept current on the mine map. The final rule is the same as the proposal.

Section 75.1500 Emergency Shelters

In the final rule, like the proposal, § 75.1500 is removed and reserved. The statutory provisions are being deleted and replaced with specific requirements for refuge alternatives in existing §§ 75.1501, 75.1502, 75.1504, and 75.1505 and new §§ 75.1506, 75.1507, 75.1508, and 75.1600–3. MSHA received one comment supporting the proposal.

Section 75.1501 Emergency Evacuations

Final § 75.1501(a)(1), like the proposal, requires that the responsible person know the locations of refuge alternatives. MSHA received one comment supporting the proposal.

Under the final rule, the designated responsible person must have current knowledge of the locations, types, and capacities of refuge alternatives to make necessary informed mine evacuation decisions in the event of an emergency.

Section 75.1502 Mine Emergency Evacuation and Firefighting Program of Instruction

Final § 75.1502(c)(3), makes an editorial change, but is substantively the same as the proposal, and requires that instruction in the deployment, use, and maintenance of refuge alternatives be added to the mine emergency evacuation program of instruction. This requirement assures that miners are able to effectively deploy and use refuge alternatives in case of an emergency. It also assures that miners are able to maintain the refuge alternative, by repairing or correcting any problems that may develop during storage or use. The final rule is consistent with NIOSH findings that refuge alternatives have the potential for saving lives if they are part of a comprehensive escape and rescue plan and if appropriate training is provided. MSHA received no comments on this proposal.

Final paragraph (c)(4)(vi), like the proposal, requires that the program of instruction include using refuge alternatives. Although MSHA expects that miners would occupy refuge alternatives only if evacuation is not possible, they need to know how to deploy and use the refuge alternative in the event of an emergency. MSHA did not receive comments on this proposal.

Final paragraph (c)(8), like the proposal, requires that the program of instruction include the locations of refuge alternatives. The locations of refuge alternatives may be critical for persons who are involved in mine emergencies. MSHA did not receive comments on this proposal.

Final paragraph (c)(10) is changed from the proposal and requires a summary of the procedures related to deploying refuge alternatives. This requirement applies to all types of refuge alternatives in approved ERPs. The final rule contains an editorial change. It changes the term ''activating'' to ''deploying.'' In addition, the proposed requirement for a summary of procedures related to ''constructing'' refuge alternatives is moved to final paragraph (c)(11).

Final paragraph (c)(11) redesignates and clarifies proposed paragraph (c)(10). Final paragraph (c)(11) requires a summary of construction methods for 15 psi stoppings constructed prior to an event. Final paragraph (c)(11) clarifies MSHA's intent that a summary of procedures related to ''constructing'' refuge alternatives applies to refuge alternatives consisting of 15 psi stoppings that will be built prior to an event that traps miners.

Final paragraph (c)(12) is redesignated from proposed paragraph (c)(11), and requires a summary of the procedures related to refuge alternative use.

The summaries required under final paragraphs (c)(10) through (12) provide the information necessary for the miners to review during training. The summaries should include all of the step-by-step procedures in a manner easily understood by miners. For easy availability, mine operators should consider laminated cards or other equally durable forms of summaries for use by miners during training. Several commenters supported the proposal.

Section 75.1504 Mine Emergency Evacuation Training and Drills

Final § 75.1504(b)(3)(ii), like the proposal, requires that in quarterly training and drills, miners locate refuge alternatives. In addition, final paragraph (b)(4)(ii), like the proposal, requires that in quarterly training and drills, miners review locating refuge alternatives on the mine and escapeway maps, the firefighting plan, and the mine emergency evacuation plan. Both requirements provide necessary information to miners in the event of an emergency.

Final paragraph (b)(6) changes and clarifies the proposal and requires that, in quarterly training and drills, miners review the procedures for deploying refuge alternatives and components. This requirement applies to all types of refuge alternatives in approved ERPs. This final rule makes editorial changes. It changes the term ''activating'' to ''deploying'' and the term ''checklist'' to ''procedures.''

Final paragraph (b)(7) redesignates and clarifies proposed paragraph (b)(6). Final paragraph (b)(7) requires that, for miners who will be constructing the 15 psi stoppings prior to an event, miners review the procedures for constructing them. Miners constructing a 15 psi stopping must receive training for the correct materials and procedures to be used prior to construction. Final paragraph (b)(7) clarifies MSHA's intent that the quarterly training on refuge alternatives consisting of 15 psi stoppings constructed prior to an event applies to miners who will be constructing these types of units. These types of refuge alternatives will be built prior to an event that traps miners. Comments on types of refuge alternatives permitted under this final rule are discussed elsewhere in this preamble under § 75.1507(a)(1).

Final paragraph (b)(8), redesignated from proposed paragraph (b)(7), requires that in quarterly training and drills, miners review the procedures related to use of refuge alternatives and components. Miners need to be aware of how to use a refuge alternative safely in the event of an emergency. This information will be critical for miners who need to spend a sustained period in a refuge alternative. Procedures should include the step-by-step process necessary for miners to use the refuge alternative or component and be easily understood by miners. Manufacturers generally provide information on the safe use of their products.

As with any non-routine task, knowledge and skill diminish rapidly. This final rule assures that miners are able to deploy and use the refuge alternative and components safely in an emergency. MSHA's Office of Educational Policy and Development will assist mine operators with the development of job task analysis and training materials such as videos to improve the quality and effectiveness of programs of instruction. In addition, NIOSH is developing a refuge alternative training program that is expected to be available the first quarter of calendar year 2009.

Final paragraph (b)(9), redesignated from proposed § 75.1508, requires that in quarterly training and drills, miners receive task training in proper transportation of refuge alternatives and components. To minimize potential damage when they are moved, miners need to be aware of the safe procedures necessary to transport refuge alternatives and components. This training should include information on all connections necessary for transportation, such as tow bars, clevises, and hitches.

This final rule, like the proposal, adopts a training approach that consists of both quarterly training and drills under final § 75.1504(b) and annual expectations training, i.e., simulated hands-on training, under final § 75.1504(c). The best refuge technology, equipment, and emergency supplies are of little benefit if they are misused or not used at all.

MSHA has identified problems related to skill degradation in emergency evacuations of mines. In a series of studies from 1990 through 1993, the U.S. Bureau of Mines, University of Kentucky, and MSHA researchers measured skills degradation. In one study, the proficiency rates dropped about 80 percent in follow-up evaluations conducted about 90 days after training. MSHA recognizes that with any non-routine task, such as deploying and using a refuge alternative or component, knowledge and skill diminish rapidly. The final rule reflects MSHA's conviction that frequent and effective refuge alternative training is necessary to assure miner proficiency.

Emergencies can result in miner disorientation and panic. Using sound judgment in a given emergency can be critical for survival. Based on MSHA's knowledge and experience, MSHA believes that quarterly training and drills together with annual expectations training is a reasonable approach to instill the discipline, confidence, and skills necessary to survive a mine emergency. This final rule improves miner training and helps assure that underground coal miners know when to use a refuge alternative and know how to deploy and use the various components to sustain life until rescued. During each quarterly drill, miners would be required to locate the refuge alternatives and review the deployment and use of the refuge alternative for the area where the miners normally work and travel.

Final § 75.1504(c)(1) and (2), like the proposal, make editorial changes to existing paragraph (c)(1). Final paragraph (c) requires that over the course of each year, each miner must participate in expectations training. Under final paragraph (c)(1), annual expectations training must include donning and transferring SCSRs in smoke, simulated smoke, or an equivalent environment. Under final paragraph (c)(2), annual expectations training must include breathing through a realistic SCSR training unit that provides the sensation of SCSR airflow resistance and heat.

Final § 75.1504(c)(3)(i) and (ii) make an editorial change, but are substantively the same as the proposal, and require annual expectations training on deployment and use of refuge alternatives similar to those in use at the mine, including deployment and operation of component systems and emphasizing that refuge alternatives are the last resort when escape is impossible. This requirement is consistent with the NIOSH report.

In addition, final paragraph (c)(4), redesignated from existing § 75.1504(c)(2) and like the proposal, requires that a miner participate in expectations training within one quarter of being employed at the mine. This could be accomplished during new miner or newly employed miner training.

Under this final rule, the expectations training requires an annual realistic experience of deploying and using a refuge alternative in a simulated emergency situation. This training could be combined with existing expectations training.

During the rulemaking process and at each of the public hearings, MSHA solicited comment on the proposed strategy and the proposed elements of training, and asked that commenters be specific including alternatives, rationale, safety benefits to miners, technological and economic feasibility, and supporting data. Some commenters supported the annual expectations training requirements, agreeing with MSHA that such training is necessary to assure miner proficiency in the deployment and use of refuge alternatives. Other commenters either opposed expectations training or stated that the training should be limited and

should not include actual activation or miners' exposure to heat and humidity. Other commenters generally supported the provisions on training and drills, but some expressed concern that all aspects of deploying and maintaining a refuge alternative be covered during hands-on training and that this hands-on training should occur every 90 days.

Based on MSHA's knowledge and experience, the Agency believes that expectations training will help minimize panic and anxiety associated with using refuge alternatives and components. NIOSH supports expectations training to reduce the level of panic and anxiety associated with the use of refuge alternatives.[4] Properly deploying a refuge alternative or component can be a relatively complex procedure that must be done correctly to establish a breathable air environment in a smoke-filled mine. Miners would have to deploy the refuge alternative, purge the atmosphere, and turn on the breathable air and maintain a viable atmosphere. In addition, the operation of most refuge alternatives and components requires periodic monitoring of and adjustments to the gases to assure a breathable atmosphere. Failure to correctly perform these tasks may imperil the lives of persons within the refuge alternative. MSHA envisions the use of a reusable training model of the refuge alternative in the mine for this purpose when they become available.

In addition, training must include deployment of the refuge alternative and components within it, including adjustments to the breathable air and harmful gas removal components. The training must emphasize that, in the event of an emergency, miners should first try to evacuate the mine and that refuge alternatives are the option of last resort when escape is impossible. Although this final rule does not include a minimum time for this training, the training should provide miners with adequate time to perform all of the necessary tasks and give them a realistic experience of deploying and using the refuge alternatives and components.

Section 75.1505 Escapeway Maps

Final § 75.1505(a), like the proposal, requires that an escapeway map include refuge alternatives and SCSR storage locations. In addition, paragraph (a)(3), like the proposal, requires that the escapeway map be posted or readily accessible for all miners at the refuge alternative. Commenters supported the proposal.

Inclusion of refuge alternatives and SCSR storage locations on the escapeway map and requiring the map to be posted or readily accessible at the refuge alternatives can be vital to the survival of miners during mine emergencies. Escapeway maps form the basis for decisions made during mine evacuation. Having escapeway maps on hand for miners will facilitate important decision making.

Final § 75.1505(b), like the proposal, requires that all escapeway maps be kept up-to-date, and that any change in the location of refuge alternatives be shown on the map by the end of the shift on which the change is made. Commenters supported the proposal.

Escapeway maps are the primary source of information needed by miners as they are evacuating the mine. Locations of refuge alternatives are critical to decisions made during evacuation efforts and must be kept current on the escapeway map.

Section 75.1506 Refuge Alternatives

This section requires that mine operators provide refuge alternatives to accommodate all persons working underground and specify criteria for the use and maintenance of refuge alternatives. MSHA believes that refuge alternatives will provide a refuge of last resort for miners unable to evacuate the mine during an emergency. By providing the essential elements of survival (breathable air, water, food, communications, etc.) the likelihood of miners surviving an inhospitable post-emergency environment would be increased. MSHA realizes that a flexible approach to providing refuge alternatives is necessary due to the wide range of mining conditions (mining height, pitch, mining method, and mine layout) that exist in underground coal mines. To address these widely varying conditions, in the final rule, MSHA has taken a performance-based approach to refuge alternatives. For example, the refuge alternative has to provide for essential needs of occupants, but the final rule does not require specific methods, equipment, or devices.

Final paragraph (a) clarifies MSHA's intent in the proposal that refuge alternatives and components must be approved as specified in paragraphs (a)(1) and (a)(2). Final paragraph (a)(1) requires that prefabricated self-contained refuge alternatives, including the structural, breathable air, air monitoring, and harmful gas removal components of the unit, must be approved under 30 CFR part 7. Paragraph (a)(2) requires that the structural components of refuge alternatives consisting of 15 psi stoppings constructed prior to an event must be approved by the District Manager, and the breathable air, air monitoring, and harmful gas removal components of these units must be approved under 30 CFR part 7.

A few commenters expressed concern regarding the approval requirements for the types of refuge alternatives and components. One commenter stated that the proposal did not specify which components needed approval concerning the different types of refuge alternatives. Final § 75.1506(a)(1) and (a)(2) clarifies the types of refuge alternatives and components and the approval requirements applicable to each unit. These requirements are consistent with MSHA's statement in the preamble to the proposal that, as appropriate, MSHA would approve the refuge alternatives and components under either part 7 or by the District Manager depending on the type of refuge alternative and components (73 FR 34160). MSHA will accept, as good faith evidence of compliance with final § 75.1506(a)(1) and (a)(2), a copy of a valid, bona fide, written purchase order with a confirmed delivery date for an approved unit.

Final paragraph (a)(3) is new and provides that prefabricated refuge alternative structures that states have approved and those that MSHA has accepted in approved Emergency Response Plans (ERPs) that are in service prior to the effective date of the rule (60 days after date of publication), are permitted until December 31, 2018, or until replaced, whichever comes first.

In addition, breathable air, air-monitoring, and harmful gas removal components of either a prefabricated self-contained unit or a unit consisting of 15 psi stoppings constructed prior to an event in a secure space and an isolated atmosphere that states have approved and those that MSHA has accepted in approved ERPs that are in use prior to the effective date of the rule (60 days after date of publication), are permitted until December 31, 2013, or until replaced, whichever comes first.

Further, refuge alternatives consisting of materials pre-positioned for miners to deploy in a secure space with an isolated atmosphere that MSHA has accepted in approved ERPs that are in use prior to the effective date of the rule (60 days after date of publication), are permitted until December 31, 2010, or until replaced, whichever comes first.

MSHA received several comments regarding the grandfathering of refuge alternatives and components that states have approved or that MSHA has

[4] NIOSH, Research Report on Refuge Alternatives for Underground Coal Mines (2008), p. 14.

accepted in approved ERPs. Some commenters stated that MSHA should unconditionally accept state-approved units. Most of these commenters stated that MSHA should accept state-approved refuge alternatives based on the manufacturer's suggested service life, or for as long as they function effectively, and not limit use to 10 years. A commenter stated that manufacturers who have successfully completed an approval by a state mine health and safety agency should be allowed to submit those materials in support of the proposal and that the results be treated as those from an approved third-party testing laboratory.

Other commenters, however, stated that MSHA should not accept previously approved refuge alternatives if they do not meet the requirements of the proposal. In addition, several commenters stated that some items such as permissible mine phone and flashlight batteries, food packets, and water either have no specified shelf life or a shelf life longer than 5 years. Other commenters stated that some components such as a harmful gas removal component can last longer than 5 years.

MSHA considered different periods for allowing approved refuge alternatives and components that do not meet the approval requirements of the final rule. MSHA is aware that some prefabricated refuge alternative structures may last longer than 10 years and that some components may last longer than 5 years. However, MSHA has determined that it must evaluate the commenters' suggestions on the service life of the prefabricated refuge alternative's structure and the other components within the context of establishing a reasonable time for manufacturers to meet the safety and approval requirements of this final rule. Accordingly, the final rule allows prefabricated refuge alternative structures that states have approved and those that MSHA has accepted in approved ERPs that are in service prior to the effective date of the rule (60 days after date of publication), to be used until replaced or 10 years after date of publication, whichever comes first.

The final rule also allows breathable air, air monitoring, and harmful gas removal components of either a prefabricated self-contained unit or a unit consisting of 15 psi stoppings constructed prior to an event in a secure space and an isolated atmosphere that states have approved and those that MSHA has accepted in approved ERPs that are in use prior to the effective date of the rule (60 days after date of publication), to be used until replaced or 5 years after date of publication, whichever comes first. Provisions such as communications, lighting, food, water, sanitation, first aid, parts and materials for repair, and tools, etc., must be replaced within 5 years, if shelf life limits so require.

Regarding refuge alternatives consisting of materials pre-positioned for miners to deploy in a secure space with an isolated atmosphere that have been approved in ERPs, MSHA has determined that these units need to be phased out due to potential issues associated with deploying these units in a secure space with an isolated atmosphere after an event. MSHA has determined that 2 years from the date of publication of the rule is a reasonable time to replace these units.

Under this final rule, a refuge alternative structure that has been approved and is in service or components that have been approved and are in use, but require replacement due to damage, must be replaced with a unit or components that meet the requirements of the final rule.

For prefabricated refuge alternative structures that states have approved and those that MSHA has accepted in approved Emergency Response Plans (ERPs) that are in service, *i.e.*, in the mine, prior to the effective date of the rule, March 2, 2009, the District Manager may accept, in lieu of the ''in service'' requirement of this grandfathering provision, a copy of a valid, bona fide, written purchase order entered into by the effective date of the rule, March 2, 2009, provided that the purchase order contains a confirmed delivery date prior to December 31, 2009. MSHA expects first year approvals to be completed by December 31, 2009, and refuge alternatives delivered after this date must be approved units.

Final § 75.1506(b), redesignated from proposed paragraph (a), requires that, except as permitted under paragraph (a)(3) of this section, each operator must provide refuge alternatives with sufficient capacity to accommodate all persons working underground.

Commenters generally supported the proposal. One commenter stated, however, that an operator can easily address the capacity of refuge alternatives for its employees, but that the operator has no control over the number of state and federal inspectors that may be present at any time in the mines. Another commenter questioned the need to accommodate all persons in refuge alternatives.

As the Agency has stated many times during this rulemaking process, MSHA believes that escape to the surface is more protective than using a refuge alternative. However, when escape is impossible, a refuge alternative must be available for all persons working underground. Under the final rule, refuge alternatives must have sufficient capacity to accommodate state and federal inspectors who can reasonably be expected to be working underground.

Final paragraph (b)(1), is redesignated from proposed paragraph (a)(1), and like the proposal requires that refuge alternatives provide at least 15 square feet of floor space per person. It modifies the proposed 60 cubic feet of volume per person to 30 to 60 cubic feet per person, which takes entry height into consideration according to the following chart. It also provides that the airlock can be included in the space and volume if waste is disposed outside the refuge alternative.

Mining height (inches)	Unrestricted volume (cubic feet) per person*
36 or less	30
>36 – ≤42	37.5
>42 – ≤48	45
>48 – ≤54	52.5
>54	60

*Includes an adjustment of 12 inches for clearances.

The volume per person includes an adjustment of 12 inches based on two factors: (1) 6 inches is necessary to allow for clearance of the refuge alternative to be moved; and (2) the usable interior height of the refuge alternative is reduced by 6 inches for the roof and floor beams resulting in a minimum of 60 cubic feet of available volume per person for mining heights above 54 inches with gradually decreasing minimum volume requirements for mining heights in between.

As an example, a 36-inch mine height is reduced by 6 inches for clearance and 6 inches for inside beams leaving 24 inches or 2 feet. The 24 inches or 2 feet multiplied by 15 square feet of floor space equals a minimum of 30 cubic feet of volume per person in the lowest mining conditions, *i.e.*, 36 inches or less. The requirements are intended to mean that persons would have free space without obstruction from components or stored items.

During the rulemaking process and at each of the public hearings, MSHA requested comments on the proposed requirement of at least 15 square feet of floor space and 60 cubic feet of volume per person, particularly in low mining heights, and asked that commenters be specific including alternatives, rationale, safety benefits to miners, technological and economic feasibility,

and supporting data. Comments on the proposed space and volume requirements, including MSHA's rationale for its decision in the final rule are addressed elsewhere in this preamble under final § 7.505(a)(1) concerning structural components.

Final paragraph (b)(2) is redesignated from proposed paragraph (a)(2), and like the proposal, requires that refuge alternatives for working sections accommodate the maximum number of persons that can be expected on or near the section at any time.

During the rulemaking process and at each of the public hearings, MSHA solicited comments on the proposed approach to refuge alternative capacity, and asked that commenters be specific including alternatives, rationale, safety benefits to miners, technological and economic feasibility, and supporting data. Some commenters stated that it is impossible to determine, in advance, how many inspectors, vendors, or other persons may be present, and therefore, the normal number of miners exposed should be the standard. One commenter supported the proposal stating that using the maximum number of persons to determine capacity, such as occurs during ''hot seat'' changeover of shifts, is appropriate. The commenter stated:

> The concept of using the shift change to determine the maximum number of occupants of a shelter was established by the West Virginia rules. It was recognized as not only practical but it provided an almost 100% safety margin for those most likely to be using a shelter.

Under the final rule, refuge alternatives for the working sections must accommodate the maximum number of persons working near the section. This includes all miners that join those working at the section during a shift change. For example, if a mine has a practice of ''hot seat'' change-out of crews at the face, the refuge alternative would need to accommodate both crews and any other persons who would routinely work near the section, such as managers, surveyors, vendors, and state and Federal inspectors.

Final paragraph (b)(3), is redesignated from and changed from proposed paragraph (a)(3). It requires that each refuge alternative in an outby area accommodate persons reasonably expected to use it.

During the rulemaking process and at each of the public hearings, MSHA solicited comments on the proposed requirement that refuge alternatives for outby areas accommodate persons assigned to work in the outby area, and asked that commenters be specific including alternatives, rationale, safety benefits to miners, technological and economic feasibility, and supporting data. Some commenters supported the proposed requirement for refuge alternatives for outby areas, but stated that these refuge alternatives should either be sized for section miners working near the belt drive outby or be adequate to house all personnel that are working in that area and not just those who are regularly assigned to that area.

Other commenters opposed the proposal. Some stated that, based on 12 past mining disasters, refuge alternatives for outby areas would not have been beneficial to the outcome of the tragedy. Others stated that the presence of escape shafts or other means of exiting the mine could eliminate the requirement for outby refuge alternatives, or that the need for refuge alternatives for outby areas should be determined on a case-by-case, site-specific basis.

Under this final rule, if persons work in an outby area that is within 30 minutes travel time (walking or crawling) from a portal or surface escape facility, an outby refuge alternative would not be required. Otherwise, MSHA has determined that refuge alternatives are necessary in outby areas of the mine to protect persons who may be working in the outby areas. MSHA's accident data support providing breathable air in the event someone cannot escape. If a person is in an outby area that is further than 30 minutes travel time from a portal or surface escape facility, then they cannot escape in accordance with the placement of their SCSR caches, and need a refuge alternative. MSHA believes that persons working or located outby must be afforded the same protection or refuge as those in the face areas.

Under the final rule, outby refuge alternatives must accommodate the number of persons reasonably expected to use it. These persons would include supply persons, locomotive operators, examiners, state and Federal inspectors, pumpers, maintenance persons, belt persons, and other persons who may be working in the outby areas. Because § 75.1506(c)(2) of the final rule requires that outby refuge alternatives be spaced so that persons in outby areas are never more than a 30-minute travel distance from a refuge alternative or a safe exit, the final rule does not require that outby refuge alternatives accommodate all section miners working near the belt drive outby. In the event that a fire or explosion occurs in an outby area and evacuation is not possible, section miners working near the belt drive outby would have access to the refuge alternative located at the nearest working face.

Another commenter said that MSHA should eliminate existing § 75.1100–2(i), which requires emergency materials, because no one would use them when refuge alternatives are available. The emergency materials listed in this existing standard are required for firefighting and would not affect this final rule.

Final paragraph (c), redesignated from proposed paragraph (b), addresses locations for placement of refuge alternatives. Final paragraph (c)(1) requires that refuge alternatives be located within 1,000 feet from the nearest working face and from locations where mechanized mining equipment is being installed or removed, except that for underground anthracite coal mines that have no electrical face equipment, refuge alternatives must be provided if the nearest working face is greater than 2,000 feet from the surface.

During the rulemaking process and at each of the public hearings, MSHA requested comments on the proposed requirement that refuge alternatives be located between 1,000 feet and 2,000 feet from the working face and from areas where mechanized mining equipment is being installed or removed, and asked that commenters be specific including alternatives, rationale, safety benefits to miners, technological and economic feasibility, and supporting data. MSHA received numerous comments on the proposal. Some commenters supported the proposal stating that a minimum distance of 1,000 feet decreases the chance of damage to the refuge alternative from an explosion and provides more space for maneuvering. Some commenters stated that a greater distance from the working face would decrease the potential damage from transporting the unit by reducing the number of times the refuge alternative would need to be moved.

Many commenters opposed the proposal because it conflicted with West Virginia's state law. Some of these commenters suggested that the final rule require refuge alternatives within 2,000 feet of the working face to eliminate conflict with the West Virginia law. Other commenters stated that MSHA should specify a maximum distance from the face, rather than a minimum, and that the distance should be based on regional conditions, allowing ''within 1,000 feet'' for refuge alternatives in West Virginia mines and ''within 2,000 feet'' for western mines. Several commenters suggested that refuge alternatives be located closer to the working face, within a few hundred feet. Some commenters stated that miners would not be able to travel much

over 1,000 feet through smoke and debris, and that the primary refuge chamber must be within 1,000 feet with other refuge alternatives spaced along the escapeway.

In its report, NIOSH recommended that the refuge alternative be located at least 1,000 feet from the working face to limit damage from explosions at the working face; but, NIOSH also indicated that it would be advantageous to place the refuge alternative as close to the face as possible to minimize the time and effort required for miners to reach it. The NIOSH report noted that lower seam heights, difficult bottom conditions, and the presence of smoke, among other factors, would affect travel times.

The highest concentration of miners underground will be at the working face; therefore, a refuge alternative capable of accommodating these miners must be positioned close to the working section. In the final rule, MSHA changed the location requirement based on testimony and comments regarding the inability of miners on the working section to travel over 1,000 feet through smoke and debris to reach the refuge alternative, especially if injured or exhausted. MSHA also took into consideration that the final rule requires the structural component of refuge alternatives to be designed to withstand an explosion.

MSHA is aware that underground anthracite coal mines have unique mining conditions. These conditions include the lack of available locations to place a refuge alternative due to crosscuts on extreme angles. The unique conditions in underground anthracite coal mines make compliance with the ''within 1,000 feet'' requirement of the final rule regarding location problematic. Therefore, the final rule requires that, for underground anthracite coal mines with no electrical face equipment, refuge alternatives must be provided if the nearest working face is greater than 2,000 feet from the surface.

MSHA also requested comments on an alternative addressed in the preamble to the proposal that would allow refuge alternatives with boreholes to be located up to 4,000 feet from the working face. Some commenters stated that this proposed alternative may complement, but should never be allowed in place of, a refuge alternative near the working face. Other commenters stated that the prescriptive distances unnecessarily limit the use of refuge alternatives with a borehole.

After evaluating all comments and data, MSHA determined that it is more protective to have a refuge alternative close to the working face so that persons can reach it more quickly. However, MSHA recognizes that refuge alternatives with pre-connected boreholes are superior to other types of refuge alternatives, even though it may not be practical or feasible to locate them close to the working face that advances daily, and may not be feasible at all for certain mining conditions. MSHA appreciates that some aspects of refuge alternatives involve developing and innovative technology. Therefore, the Agency encourages mine operators to connect each refuge alternative located along the escapeway to a borehole, where feasible and appropriate.

Final paragraph (c)(2), redesignated from proposed paragraph (b)(2), requires that outby refuge alternatives be spaced within 1-hour travel distances in outby areas where persons work such that persons in outby areas are never more than a 30-minute travel distance from a refuge alternative or safe exit. In addition, it provides that the operator may request and the District Manager may approve a different location in the ERP.

The operator's request must be based on an assessment of the risk to persons in outby areas, considering the following factors: proximity to seals; proximity to potential fire or ignition sources; conditions in the outby areas; location of stored SCSRs; and proximity to the most direct, safe, and practical route to an intake escapeway. MSHA recognizes that the different locations approved in the ERP may require persons in outby areas to travel farther than 30 minutes to reach a refuge alternative. The Agency believes that the availability of additional SCSRs, as required in MSHA's Emergency Mine Evacuation standard, further assures that persons in outby areas will be able to reach a refuge alternative if necessary.

During the rulemaking process and at each of the public hearings, MSHA solicited comments on locating refuge alternatives in outby areas, including the minimum and maximum distances, and asked that commenters be specific including alternatives, rationale, safety benefits to miners, technological and economic feasibility, and supporting data. Some commenters stated that the distance between refuge alternatives in outby areas should not be specified; but generally supported the proposal, including allowing the operator the option of requesting a different location in the ERP. These commenters stated that the distance between refuge alternatives in outby areas is best addressed in the ERP approval process. Other commenters opposed allowing operators the option of requesting different locations for refuge alternatives to be approved in the ERP. Another commenter stated that refuge alternatives should be 30 minutes walking distance from each other and in the primary escapeway that miners would use in the event of an evacuation. One commenter stated that the distance between refuge alternatives should be much shorter than 30 minutes, especially when miners are traveling under emergency conditions.

MSHA believes that it is necessary to specify distances for locating outby refuge alternatives for purposes of consistency and training. Specifying distances will improve miners' awareness of the location of these refuge alternatives. Miners are already aware of SCSR storage locations under the Emergency Mine Evacuation final rule.

In 2006, in developing the Emergency Mine Evacuation final rule (71 FR 71430), MSHA examined how far miners could travel during 30 minutes. Existing § 75.1714–4(c)(2) provides two methods for determining the 30-minute spacing of SCSR storage locations in escapeways. The first method is based on a sample of typical miners walking a selected length of each escapeway. The second method is based on average entry height, specified in the following table, except for escapeways with uphill grades over 5 percent.

Average entry height	Maximum distance between SCSR storage locations
<40 in. (Crawl)	2,200 ft.
>40–<50 in. (Duck Walk).	3,300 ft.
>50–<65 in. (Walk Head Bent).	4,400 ft.
>65 in. (Walk Erect) ..	5,700 ft.

The table could be used to determine the locations of the outby refuge alternatives based on 30-minute travel time.

According to the table above, SCSR storage locations are at 60-minute intervals. Based on the spacing of SCSR storage locations, outby refuge alternatives may be situated at every other SCSR storage location along the escapeway. The final rule does not change the proposed 30-minute travel distance because the final rule requires refuge alternatives to be within 1,000 feet of the working face. Persons needing to access outby refuge alternatives are assisted by escapeway lifelines and SCSR caches.

Final paragraph (d) is redesignated from proposed paragraph (c) and, like the proposal, requires that roof and rib support for refuge alternative locations

be specified in the mine's roof control plan. MSHA addresses this requirement elsewhere in this preamble under final § 75.221 concerning roof control plan information. MSHA included this requirement in this standard to assure that mine operators adequately prepare locations for refuge alternatives.

Final paragraph (e) is redesignated from proposed paragraph (d) and, like the proposal, requires that the operator protect the refuge alternative and contents from damage during transportation, installation, and storage. Some commenters supported the proposal; one commenter opposed it. The final requirement assures that care will be taken to avoid damage to the refuge alternative and contents at all times. When transporting a refuge alternative from one location to another, attention needs to be paid to procedures such as the use of proper connections and devices, such as tow bars, clevises, and hitches, for transportation.

Final paragraph (f) is redesignated from proposed paragraph (e) and, like the proposal, requires that a refuge alternative be removed from service if examination reveals damage or tampering that could interfere with the functioning of the refuge alternative or any component. Refuge alternatives may be damaged by persons, mining equipment, or the mine environment. The final rule requires that damage must be evaluated and, as noted above, if damage or tampering could interfere with the functioning of the refuge alternative or its components, it must be removed from service. For the safety of the persons who would need to use the refuge alternative, removal should occur immediately. For example, if a preshift examination reveals a leak in a compressed gas storage system, the refuge alternative must be removed from service since it would be unable to provide breathable air in an emergency.

MSHA did not receive comments on this proposal and the final rule is the same as proposed.

Final paragraph (f)(1) is redesignated from proposed paragraph (e)(1) and, like the proposal, requires the operator to withdraw all persons from the area serviced by the refuge alternative if the refuge alternative is removed from service, except those persons referred to in § 104(c) of the Mine Act.

Some commenters supported the proposed requirement. Other commenters opposed the proposal stating that MSHA should allow miners to continue working in the area if the operator provides an alternative that provides equivalent protection.

Because an inoperable or damaged refuge alternative does not provide the protection intended, the operator must withdraw persons from any area when the refuge alternative serving that area is removed from service. This does not include persons performing repairs, who should be provided with additional SCSRs to assure that they can reach another refuge alternative. If, however, an approved refuge alternative is provided and maintained as a back-up, persons do not have to be withdrawn because a functional replacement refuge alternative is readily available.

Final paragraph (f)(2) is redesignated from proposed paragraph (e)(2) and, like the proposal, requires that refuge alternative components removed from service be replaced or repaired in accordance with manufacturer's specifications. This requirement assures that the refuge alternative is maintained in its approved condition to provide the protection afforded by approved refuge alternatives at all times. MSHA did not receive comments on this requirement and the final rule is the same as proposed.

Final paragraph (g) is redesignated from proposed paragraph (f). It includes an editorial change, but is substantively the same as the proposal, and requires that, at all times, the site and area around the refuge alternative be kept clear of machinery, materials, and obstructions that could interfere with the deployment or use of the refuge alternative.

One commenter stated that it may be impractical to keep materials from blocking access to or use of the refuge alternative. To protect persons during an emergency, the site and area around the refuge alternative must be easily accessible. Areas around refuge alternatives must be maintained without obstructions that hinder access to the refuge alternative. This requirement is necessary to assure the availability of the refuge alternative and the survivability of persons who need to use it.

Final paragraph (h) is redesignated from proposed paragraph (g) and, like the proposal, requires that each refuge alternative be conspicuously identified with a sign or marker. Under final paragraph (h)(1), like the proposal, the sign or marker must be made of reflective material with the word ''REFUGE'' and must be posted conspicuously at each refuge alternative. Under final paragraph (h)(2), like the proposal, a directional sign must be made of reflective material and must be posted leading to each refuge alternative location.

This requirement provides a quick way for persons not in escapeways and therefore not able to use the lifeline system to locate the refuge alternative in an emergency. Reflective material greatly increases the visibility of the sign. This requirement is the same as existing § 75.1714–4(f), which requires reflective signs on SCSR storage locations. As noted above, miners may not be located in escapeways when an emergency occurs. For them, a system of directional signs may be critical during an emergency. Signs should be posted at intersections of the escapeway and the crosscut leading to the refuge alternative. Persons traveling in adjacent entries would have signs directing them to the refuge alternative.

Some commenters opposed the proposed requirement that the sign or marker use the word ''REFUGE.'' They stated that operators should have flexibility to use different terminology that is more appropriate, such as, ''rescue chamber,'' or ''escape shelters.'' A standardized sign or marker with the word ''REFUGE'' will reduce the possibility of confusion in an emergency, and will provide an additional safety benefit to persons who work in different mines because they would not have to become familiar with new terminology. Use of the word ''REFUGE,'' however, does not preclude the use of additional terms on the sign or marker to identify the refuge alternative. Therefore, the final rule makes no change to the proposal.

Final paragraph (i) has been added to make part 75 consistent with § 7.506(b)(2) of the approval requirements. It requires that, during use of the refuge alternative, the atmosphere within the refuge alternative must be monitored. It further requires that changes or adjustments must be made to reduce the concentration of methane to less than 1 percent; to reduce the concentration of carbon dioxide to 1 percent or less, and excursions not to exceed 2.5 percent; and to reduce the concentration of carbon monoxide to 25 ppm or less. Oxygen must be maintained at 18.5 to 23 percent.

The occupants of the refuge alternative must follow the monitoring procedures included with the air-monitoring component. This requirement was proposed in the approval requirements and is included in the safety standards to clarify MSHA's intent that operators take appropriate actions to assure that persons will operate the refuge alternative safely and properly.

Final paragraph (j) has been added to make part 75 consistent with § 7.504(c)(6) of the approval requirements. It requires that refuge alternatives contain a fire extinguisher

that meets the requirements for portable fire extinguishers used in underground coal mines under this part; that the fire extinguisher is appropriate for fires involving the chemicals used for harmful gas removal; and that it uses a low-toxicity extinguishing agent that does not produce a hazardous by-product when activated. This requirement was proposed in the approval requirements and is included in the safety standards to clarify MSHA's intent that operators provide appropriate firefighting protection for refuge alternatives.

Section 75.1507 Emergency Response Plan; Refuge Alternatives

Final § 75.1507(a), like the proposal, contains the information on refuge alternatives that the operator must include in the ERP. One commenter stated that MSHA should not require that the ERP document include all the specifications that the manufacturer has had certified by MSHA.

The requirement in this final rule assists the District Manager in determining whether the refuge alternative or component meets the approval requirements. For refuge alternatives approved under 30 CFR part 7, the ERP would only need to include the information provided by the approval holder.

Final § 75.1507(a)(1), like the proposal, requires that the mine operator specify the types of refuge alternatives and components used in the mine. The type of refuge alternative is not dependent upon mining height. The final rule provides flexibility in the type of refuge alternatives that will meet the requirements.

One type of refuge alternative allowed under the final rule is a prefabricated self-contained unit. The unit is portable and may be used near the working face or in outby areas. Prefabricated units may consist of structures that are sealed to protect against contamination. Refuge alternatives contain structural, breathable air, air monitoring, and harmful gas removal components. The structural component of prefabricated units may consist of steel enclosures that contain tents that are inflated upon deployment. Prefabricated self-contained units are evaluated under MSHA's approval requirements.

Some commenters expressed concern regarding the refuge alternative in the proposal consisting of a secure space constructed in place, with an isolated atmosphere. These commenters stated that the term ''constructed'' implies the use of a post-event barricade, which has not been demonstrated as effective. The final rule clarifies the Agency's intent; this type of refuge alternative is a unit consisting of 15 psi stoppings constructed prior to an event in a secure space and an isolated atmosphere. It is important to note that under the final rule, MSHA's intent is that these refuge alternatives would be built and in place prior to an emergency. The breathable air, air monitoring, and harmful gas removal components of this unit are placed in a cross-cut or dead-end entry and stoppings create a secure area with an isolated atmosphere. The approved components should be ready to be deployed when miners reach the secure area. The stoppings and doors are built prior to an emergency and must be able to resist a 15 psi overpressure.

The doors should have a tamper-evident seal or other means to indicate unauthorized entry. The structural components of these units must be approved by the District Manager, and the breathable air, air monitoring, and harmful gas removal components of these units must be approved under part 7.

Refuge alternatives consisting of 15 psi stoppings constructed prior to an event would typically be used in outby areas. If used near the working section, the stoppings could be removed to allow the components to be moved periodically to the next location and new stoppings would be needed.

Some commenters supported, while others opposed the proposed refuge alternative consisting of ''materials pre-positioned for miners to construct a secure space with an isolated atmosphere.'' Commenters who supported all three types of proposed refuge alternatives stated that there are benefits and drawbacks to each type, but that all three should be allowed because there is no ''one-size-fits-all'' solution. They noted that the size of a unit consisting of ''materials pre-positioned'' may be preferable under some circumstances because the size of the unit would not be constrained by the size of the inflatable tent or metal structure. Commenters opposed to the refuge alternative consisting of ''materials pre-positioned'' stated that constructing a unit during or after an emergency is not a viable solution for persons who cannot evacuate because crosscuts cannot be successfully purged after a fire or explosion. Some of these commenters stated that construction is too difficult because of dust, chaos, injury, inability to see, disorientation, and fatigue.

Because of potential issues associated with miners constructing a secure space with an isolated atmosphere after an emergency, the final rule does not include this type of refuge alternative. MSHA has determined, based on further analysis, and the testimony and comments, that using pre-positioned materials to construct a secure space after a fire or explosion could be problematic.

Final paragraph (a)(2), like the proposal, requires that the ERP include procedures or methods for maintaining approved refuge alternatives and components. One commenter stated that repair capability is limited during emergencies.

This final rule assures that the refuge alternative will be maintained during storage so that it is available for deployment and use in an emergency. Maintenance procedures or methods should include frequent maintenance checks and replacement schedules for components. The final rule is the same as proposed.

Final paragraph (a)(3), like the proposal, requires that the rated capacity of each refuge alternative, the number of persons expected to use each refuge alternative, and the duration of breathable air provided per person by the approved breathable air component of each refuge alternative be included in the ERP.

MSHA received comments on the proposed rated capacity and 96-hour duration for breathable air. Those comments are addressed elsewhere in this preamble under final §§ 7.505(a)(1) and 7.506(b)(1). The final rule is the same as proposed.

Final paragraph (a)(4) is changed from the proposal and requires that the ERP include the methods for providing breathable air with sufficient detail of the component's capability to provide breathable air over the duration stated in the approval. The proposed requirement to include the methods for removing carbon dioxide is moved to final § 75.1507(a)(8) addressing harmful gas removal.

MSHA received comments on the proposed methods for providing breathable air and removing carbon dioxide. They are addressed elsewhere in this preamble under final §§ 7.506 and 7.508.

Final paragraph (a)(5), like the proposal, requires that the ERP include methods to provide ready backup oxygen controls and regulators. The term ''ready'' means pre-connected valves and regulators. Backup oxygen controls and regulators are necessary to assure that miners will always have breathable air available in case of component failures.

MSHA received comments on back-up oxygen controls and regulators. Those comments are addressed elsewhere in

this preamble under final § 7.506. The final rule is the same as proposed.

Final paragraph (a)(6), like the proposal, requires that the ERP include the methods for providing an airlock and the methods for providing breathable air in the airlock, except where adequate positive pressure is maintained. The ERP must provide specific information regarding how the airlock will provide and maintain breathable air. When miners enter the refuge alternative through the airlock, sufficient purge air is necessary to clear the airlock of contaminants to minimize contamination inside the refuge alternative. Purging or other effective methods would be necessary, within 20 minutes of miners deploying the refuge alternative, for the airlock to dilute the carbon monoxide concentration to 25 ppm or less and the methane concentration to 1.0 percent or less.

The positive pressure relief should be set at 0.18 psi for refuge alternatives consisting of 15 psi stoppings constructed prior to an event.

MSHA received comments on the proposed methods for providing an airlock and the methods for providing breathable air in the airlock. Those comments are addressed elsewhere in this preamble under final § 7.508(a)(1). The final rule is the same as proposed with one editorial change.

Final paragraph (a)(7), like the proposal, requires that the ERP include methods for providing sanitation facilities. Under the approval requirements, prefabricated units are required to be designed to provide a means to contain human waste effectively and minimize objectionable odors. Information on sanitation facilities in prefabricated units must be contained in the manufacturer's operations manual. For units consisting of 15 psi stoppings constructed prior to an event, the operator should provide comparable information in the ERP. The final rule assists MSHA in verifying that the refuge alternative has an adequate means for containing or disposing of waste.

MSHA received comments on the proposed requirement dealing with a means to contain human waste effectively and minimize objectionable odors. They are addressed elsewhere in this preamble under final § 7.504. The final rule is the same as proposed.

Final paragraph (a)(8), like the proposal, requires that the ERP include the methods for harmful gas removal if necessary. Information on harmful gas removal is essential for MSHA to determine the ability of the refuge alternative to sustain occupants for 96 hours. Sufficient purge air is necessary to clear the refuge alternative of smoke, carbon monoxide, carbon dioxide, and other toxic and irritant gases, fumes, mists, and dusts that may enter the refuge alternative through the airlock.

MSHA received comments on the proposal dealing with harmful gas removal. They are addressed elsewhere in this preamble under final § 7.508. The final rule is the same as proposed.

Final paragraph (a)(9), like the proposal, requires that the ERP include methods for monitoring gas concentrations, including charging and calibration of equipment. This information is essential for MSHA to determine that persons inside the refuge alternative will be aware of the concentrations of carbon dioxide, carbon monoxide, methane, oxygen and, if necessary, other harmful gases specific to the mine, inside and outside the structure, including the airlock. It also assists MSHA in evaluating whether the air-monitoring component meets the requirements for sustaining persons for 96 hours.

MSHA received comments on the proposal addressing monitoring gas concentrations, and charging and calibrating equipment. They are addressed elsewhere in this preamble under final § 7.507 addressing air monitoring components. The final rule is the same as proposed.

Paragraph (a)(10) is substantively the same as the proposal and requires that the ERP include the method for providing lighting sufficient for persons to perform tasks. This requirement assists MSHA in evaluating whether persons have adequate light to read instructions, warnings, and gauges; operate gas monitoring detectors; and perform other activities related to the operation of the refuge alternatives. MSHA received comments on the proposal. They are addressed elsewhere in this preamble under final § 7.504. The final rule includes a non-substantive change, adding the term ''for persons'' to the requirement.

Final paragraphs (a)(11)(i) and (ii), like the proposal, require that the ERP include suitable locations for the refuge alternatives and that the ERP specify that refuge alternatives are not within direct line of sight of the working face and, where feasible, not in areas directly across from, nor closer than 500 feet radially from, belt drives, take-ups, transfer points, air compressors, explosive magazines, seals, entrances to abandoned areas, and fuel, oil, or other flammable or combustible material storage. In the preamble to the proposal, MSHA stated that it would consider exceptions if it was not feasible to locate the refuge alternative according to the proposal.

In response to comments, final paragraph (a)(11)(ii) contains a new provision that the operator may request and the District Manager may approve an alternative location in the ERP if mining involves two-entry systems or yield pillars in a longwall that would prohibit locating the refuge alternative out of direct line of sight of the working face.

Some commenters supported the proposal stating that it minimizes damage from the direct forces from an explosion. Many commenters, however, opposed the proposed limitations on positioning of refuge alternatives. Some commenters stated that the mining plan and conditions at each mine need to be considered and that positioning should be assessed on a mine-by-mine basis by the District Manager in the ERP. Some commenters stated that the proposal on positioning of refuge alternatives is unnecessary because the units are required to withstand an overpressure of 15 psi under the proposal. Other commenters stated that the proposal creates the potential for unnecessary risk of: Damaging a prefabricated unit, because of the difficulty in maneuvering refuge alternatives in and out of crosscuts; and injuring miners when the unit is moved, because moves in and out of crosscuts require a lot more handling.

The final rule assures the availability and survivability of the refuge alternative and its occupants. Refuge alternatives must be positioned so that they are easily accessible. In addition, positioning refuge alternatives so that they are located away from potential hazards, such as an explosion or fire at the working face, minimizes the heat or explosive forces that could affect the safety of persons in the refuge alternative.

The final rule is consistent with the NIOSH report, which recommended that refuge alternatives be positioned in crosscuts, rather than entries, or located in dead-end cuts to decrease the possibility of damage from overpressure or flying debris from an explosion. NIOSH also recommended that refuge alternatives be located away from potential sources of fires, such as belt drives.

Final paragraph (a)(12) is new and is included in the final rule to complement the Agency's proposal on apparent temperature and to clarify the Agency's intent that apparent temperature be achieved in all mining conditions. It requires that the ERP include the maximum mine air temperature at each of the locations

where refuge alternatives are to be placed.

During the rulemaking process and at each of the public hearings, MSHA asked for comment on how best to achieve apparent temperature, and asked that commenters be specific including alternatives, rationale, safety benefits to miners, technological and economic feasibility, and supporting data. This provision is added in response to commenters' concerns regarding the effect that the mine temperature would have on the internal apparent temperature in the refuge alternative. These commenters stated that the temperature outside of the unit must be taken into consideration because of heat transfer. The final rule also includes a corresponding provision under final § 7.503(b)(5) requiring that the application for approval specify the maximum mine air temperature under which the refuge alternative is designed to operate when the unit is fully occupied.

Final paragraph (b) contains requirements for ERPs for refuge alternatives consisting of 15 psi stoppings constructed prior to an event in a secure space and an isolated atmosphere. As stated previously, the final rule clarifies the Agency's intent regarding this type of refuge alternative. Final paragraph (b)(1), like the proposal, requires that the ERP specify that the breathable air components are approved by MSHA. MSHA received comments on the proposed breathable air provisions and those comments are addressed elsewhere in this preamble under final § 7.506. The final rule is the same as proposed.

Final paragraph (b)(2), like the proposal, requires that the ERP specify that the refuge alternative can withstand exposure to a flash fire of 300 °F for 3 seconds and a pressure wave of 15 psi overpressure for 0.2 seconds. Because the stoppings must protect persons and the components of the refuge alternative, they must be able to withstand both flash fires and explosive overpressures. MSHA received comments on both the proposal's flash fire and overpressure requirements. They are addressed elsewhere in this preamble under final § 7.505(a)(4) and (a)(5). The final rule is the same as proposed.

Proposed § 75.1507(c) is not included in the final rule. The proposal addressed requirements for ERPs for refuge alternatives that consist of materials pre-positioned for miners to deploy in a secure space with an isolated atmosphere. The Agency's rationale for not including this refuge alternative in the final rule is discussed in the preamble under § 75.1506(a).

Final paragraph (c), redesignated from proposed paragraph (d), requires that, if the refuge alternative sustains persons for only 48 hours, the ERP must detail advanced arrangements that have been made to assure that persons who cannot be rescued within 48 hours will receive additional supplies to sustain them until rescue. MSHA expects that a borehole would be drilled near the location of the refuge alternative. A method for supplying breathable air from the surface through the borehole would need to have the capability to provide a sufficient quantity of air to dilute any harmful gases in and around the refuge alternative.

Final paragraph (c) also requires that the ERP include the following advance arrangements. Final paragraph (c)(1) requires pre-surveyed areas for refuge alternatives with closure errors of less than 20,000:1. This requirement assures that the survey that is done on the surface and the one performed underground are closed. The surface survey could be done with global positioning satellite equipment. When a survey connects back to itself, it is called a loop. The loop in this provision would begin with the surface survey of the location above the location of the refuge alternative and along a route to the underground location of the refuge alternative and back to the beginning survey location on the surface. If a loop is surveyed perfectly, the survey should come back to the exact point at which it started. If the loop does not come back to the exact starting point, it is called a closure error. Closure errors indicate that some or all of the survey measurements within a loop have errors. This provision assures accuracy in getting the borehole to the correct location underground.

Final paragraph (c)(2) requires an analysis of the surface terrain, the strata, the capabilities of the drill rig, and all other factors that could affect drilling. This analysis must demonstrate that a hole can be drilled within 48 hours of an emergency and that the hole will be able to provide required supplies and materials to trapped persons. This requirement assures that the operator will discover and repair any conditions that could interfere with or delay drilling. The drill rig capabilities should be examined to assure that the appropriate drill model is selected. This allows planning so that correct equipment and supplies are available when needed.

Final paragraph (c)(3) requires that the operator secures permissions to cross properties, build roads, and construct drill sites. It assures that delays are minimized or eliminated and that drilling can proceed immediately upon arrival of the drill rig.

Final paragraph (c)(4) requires an arrangement with a drilling contractor or other supplier of drilling services to provide a suitable drilling rig, personnel, and support so that a hole can be completed to the refuge alternative within 48 hours. This arrangement should include details concerning mobilization, availability, ancillary services, backup plans, drill-hole specifications, completion schedules, and spare parts.

Final paragraph (c)(5) requires the capability to promptly transport a drill rig to a pre-surveyed location so that a drilled hole would be completed and located near a refuge alternative structure within 48 hours of an emergency at a mine. If the pre-surveyed location is not easily accessible, the operator should have advance arrangements to have the appropriate equipment to transport the drill rig to the location. The operator should consider and prepare for potential delays.

Final paragraph (c)(6) requires specifications of the pipes, air lines, approved fans, or approved compressors that will be used. This information decreases the possibility that an inappropriate or inadequate source of breathable air would be connected to the borehole.

Final paragraph (c)(7) requires a method for assuring that breathable air is provided within 48 hours. This provision assures that the means to provide breathable air, i.e., compressors, fans, and blowers, is designed for the planned conditions. The design should include consideration of pipe resistance, volumes and velocities needed, connections required on the surface, power needs, and required supplies. The system should be on hand and ready to provide breathable air after the borehole is completed.

Final paragraph (c)(8) requires a method for assuring the immediate availability of a backup source for supplying breathable air and a backup power source for surface installations. This information assists MSHA in evaluating the continued availability of breathable air.

Some commenters opposed the proposal. These commenters stated that storing only 48 hours of breathable air is not sufficiently protective because it is unlikely that enough additional supplies could be provided to sustain persons. These commenters also stated that the alternative leaves too much to chance given the availability of refuge

alternatives that are able to provide 96 hours of breathable air.

Other commenters supported the proposal. These commenters stated that operators have made arrangements under MSHA's Program Information Bulletin No. P07–03 and that these provisions need to be maintained in the final rule. One commenter requested that the ERP include additional provisions, such as contracts between the operator and drilling contractor and access to earth-moving equipment, etc., to demonstrate advance preparation and help assure that trapped persons receive additional supplies as early as possible.

Based on MSHA's experience and information provided from mine operators, MSHA believes that most operators will provide refuge alternatives with 96 hours of breathable air. However, based on Agency knowledge and experience, MSHA also believes that there can be advantages to providing breathable air through a borehole. Once a borehole is established in proximity to the refuge alternative, the supply of breathable air at the location of the refuge alternative would be unlimited. The final rule requires that the ERP contain enough information to allow the District Manager to evaluate the adequacy of the operator's advanced arrangements to provide breathable air to sustain trapped persons for 96 hours.

During the rulemaking process and at each public hearing, MSHA requested comments on whether the rule should contain a provision that the advanced arrangements specified in the ERP include a method for assuring that there will be a suitable means to connect the drilled hole to the refuge alternative and that the connection be made within 10 minutes, and asked that commenters be specific including alternatives, rationale, safety benefits to miners, technological and economic feasibility, and supporting data. Commenters opposed the proposed requirement. They expressed concern regarding the safety of persons leaving the refuge alternative to connect it to a borehole. Accordingly, the final rule does not include the proposed requirement. As stated above, a method for supplying breathable air from the surface through the borehole would need to have the capability to provide a sufficient quantity of air to dilute any harmful gases in and around the refuge alternative.

Final paragraph (d) is redesignated from proposed paragraph (e). Like the proposal, it requires the ERP to specify that the refuge alternative is stocked with essential supplies or provisions.

Final paragraph (d)(1) requires that the ERP specify a minimum of 2,000 calories of food and 2.25 quarts of potable water per person per day to sustain the maximum number of persons reasonably expected to use the refuge alternative at one time. Commenters generally supported the proposal. Commenters suggested including a range of caloric intake, electrolyte substitutes as a fluid requirement, and individual disposable packages. One commenter said that some survival companies are providing sterile water and M.R.E. food packets with a shelf life of as much as 12 years and that MSHA should allow them to be used for their entire service life. Another commenter noted that, in the NIOSH report, providing for the most basic human needs, *e.g.*, water, food, and waste disposal, is crucial for survival.

The final rule is consistent with NIOSH's recommendations and is intended to meet the basic nutritional needs of trapped miners. Food and water should be replaced upon expiration. Additional calories and fluids, such as electrolyte substitutes, may be provided. The final rule is the same as proposed.

Final paragraph (d)(2), redesignated from proposed paragraph (e)(2), amends and clarifies the proposed provision. Final paragraph (d)(2) requires the ERP to specify that the refuge alternative be stocked with a manual that contains sufficient detail for each refuge alternative or component addressing in-mine transportation, operation, and maintenance of the unit. The final rule clarifies MSHA's intent that the refuge alternative contain a manual that provides information in a simpler, more straightforward manner for ease of understanding by the persons using it. The manual should contain step-by-step or pictorial instructions or checklists for ease of understanding and necessary information in sufficient detail for the safe and effective operation and maintenance of the refuge alternative and components. MSHA did not receive comments on this proposal.

Final paragraph (d)(3), like the proposal, requires the ERP to specify that the refuge alternative is stocked with sufficient quantities of materials and tools to repair components. Materials and tools should include metal repair materials, fiber material, adhesives, sealants, tapes, and general hardware (*i.e.*, screws, bolts, rivets, wire, zippers, and clips). MSHA did not receive comments on the proposal. The final rule is the same as proposed.

Final paragraph (d)(4), like the proposal, requires the ERP to specify that the refuge alternative is stocked with first aid supplies. This requirement assures that adequate first aid supplies are provided for persons injured in an emergency situation. Although MSHA received comments on the proposal, the comments are discussed in this preamble under final § 7.504(c)(4), which includes the general requirements for a refuge alternative's approval. The final rule is the same as proposed.

Section 75.1508 Training and Records for Examination, Maintenance, and Repair of Refuge Alternatives and Components

Final paragraph (a), like the proposal, requires that persons examining, maintaining, or repairing refuge alternatives and components be instructed in how to perform this work. This final rule addresses training for examination, maintenance, and repair of refuge alternatives and components in addition to quarterly training and drills under final § 75.1504(b) and annual expectations training under final § 75.1504(c). Final paragraph (a) does not include training on transportation of refuge alternatives or components as proposed. Task training for persons transporting refuge alternatives or components is required quarterly in mine emergency evacuation training and drills under final § 75.1504(b)(10).

Under final paragraph (a)(1), the operator must assure that all persons assigned to examine, maintain, and repair refuge alternatives and components are trained. This requirement assures that persons assigned to these tasks are capable so that refuge alternatives and components are available and usable when needed. All units and components should be maintained using the manufacturer's specifications and procedures. The examiner should be trained in the aspects critical to the deployment and use of the refuge alternative. For some non-routine maintenance and repair work, persons may need on-the-job training just before or as they conduct the maintenance or repair. For example, a manufacturer's representative or other knowledgeable person may need to be contacted for instructions. The training can vary given the scope of the tasks and the interval since the last training in that same task.

Under final paragraph (a)(2), the operator must certify, by signature and date, the training of persons who examine, maintain, and repair refuge alternatives and components. The training certifications help MSHA and the operator assure that the appropriate

personnel have received the required training.

Under final paragraph (b), the person conducting the maintenance or repair must make a record of all corrective action taken at the completion of each repair. Records of corrective action taken help identify defective parts and design flaws so they can be addressed appropriately to better assure the effective operation of the unit.

Under final paragraph (c), the mine operator must keep training certifications and repair records at the mine for one year. Certifications and repair records are necessary to help MSHA and the operator identify any systemic defects or problems with the refuge alternative and assure that they are corrected.

Commenters generally supported the training requirements. Commenters supported training that is comprehensive and practical. One commenter suggested that hands-on training be used whenever possible. Another commenter supported training in accordance with manufacturers' recommendations. Comments concerning quarterly training and annual expectations training are discussed elsewhere in this preamble under final § 75.1504(b) and (c). The final rule is the same as proposed.

Section 75.1600–3 Communications Facilities; Refuge Alternatives

Final § 75.1600–3 requires that refuge alternatives be provided with a communications system. Paragraph (a)(1) requires a two-way communication facility that is a part of the mine communication system, which can be used from inside the refuge alternative. Paragraph (a)(2) requires an additional communication system and other requirements as defined in the communications portion of the operator's approved ERP. The additional communications system should be independent of the mine communication system and continuous to the surface. An additional means of communication will improve the survivability of communications post-accident. When hardwired systems are used to meet the MINER Act requirement for redundant communication between surface and underground personnel, wires should be routed through separate entries or boreholes continuous to the surface.

Commenters generally supported the proposal. Commenters agreed that a means of two-way communications from the refuge alternative to the surface should be available at all times. One commenter asked MSHA to add language to the rule clarifying that, as soon as it becomes commercially available, a two-way wireless communications system will be required in the ERP and, shortly thereafter, in all underground refuge alternatives.

Communications with the persons in refuge alternatives are vital to mine rescue efforts. The knowledge of where miners are in refuge alternatives, their condition, and the conditions in the mine may make the difference between life-and-death in a post-accident crisis. The MINER Act requires that, by June 15, 2009, for an Emergency Response Plan to be approved, it must include a two-way wireless communication system and an electronic tracking system that permits surface personnel to determine the location of any persons trapped underground. If these systems cannot be adopted, the MINER Act requires that ERPs set forth an alternative means of compliance that approximates ''as closely as possible, the degree of functional utility and safety protection provided by the wireless two-way medium and tracking system.'' MSHA is working with NIOSH on this emerging technology and will provide further guidance to the mining community with respect to the Agency's expectations for ''wireless communication'' systems in ERPs. Because the ''fully wireless'' communications technology is not fully developed at this time, and it is not likely to be technically achievable for all mines in the foreseeable future, the final rule does not include a requirement for fully wireless communications. MSHA is aware that alternatives are being developed that would improve the communications for trapped miners. Manufacturers may need to provide other accommodations for these systems. The final rule uses the language ''additional communications'' systems as defined in the communications portion of the operator's ERP. When a wireless system becomes available, the Agency will require mine operators to include them in their ERPs. The final rule makes an editorial change, but is the same as the proposal.

III. Executive Order 12866

Executive Order (E.O.) 12866 requires that regulatory agencies assess both the costs and benefits of regulations. To comply with E.O. 12866, MSHA has prepared a Regulatory Economic Analysis (REA) for the final rule. The REA contains supporting data and explanation for the summary materials presented in this preamble, including the covered mining industry, costs and benefits, feasibility, small business impacts, and paperwork. The REA can be found at MSHA's Web site at *http://www.msha.gov/REGSINFO.HTM.* A copy of the REA can be obtained from MSHA's Office of Standards, Regulations and Variances at the address in the **ADDRESSES** section of this preamble.

Under E.O. 12866, a significant regulatory action is one meeting any of a number of specified conditions, including the following: having an annual effect on the economy of $100 million or more, creating a serious inconsistency or interfering with an action of another agency, materially altering the budgetary impact of entitlements or the rights of entitlement recipients, or raising novel legal or policy issues. Based on the REA, MSHA has determined that the final rule will have an effect of $100 million or more on the economy in the first year that the final rule is in effect and that, therefore, it is an economically significant regulatory action.

Congressional Review Act

Under the Congressional Review Act (CRA), a major rule generally cannot take effect until 60 days after the rule is published. The term ''major rule'' is defined under the CRA as any rule that results in or is likely to result in ''an annual effect on the economy of $100,000,000 or more. The costs in the REA represent what MSHA believes to be the upper bound of the range of estimated compliance costs: $129 million first year and $53 million yearly. MSHA has presented these upper-bound estimates as a conservative approach to estimating compliance costs.

The final rule allows existing prefabricated refuge alternative structures that states have approved and those that MSHA has accepted in approved ERPs that are in service prior to the effective date of the rule (60 days after date of publication) to be used until December 31, 2018, or until replaced, whichever comes first. It also allows existing breathable air, air monitoring, and harmful gas removal components of either a prefabricated self-contained unit or a unit consisting of 15 psi stoppings constructed prior to an event in a secure space and an isolated atmosphere that states have approved and those that MSHA has accepted in approved ERPs that are in use prior to the effective date of the rule (60 days after date of publication) to be used until December 31, 2013, or until replaced, whichever comes first. Refuge alternatives consisting of materials pre-positioned for miners to deploy in a secure space with an isolated

atmosphere that MSHA has accepted in approved ERPs that are in use prior to the effective date of the rule (60 days after date of publication) may be used until December 31, 2010, or until replaced, whichever comes first. First year costs could be lower because of use of existing refuge alternatives as described above.

A. Population at Risk

The final rule applies to all underground coal mines in the United States. As of 2007, there were 624 underground coal mines, employing approximately 42,200 miners, of which 613 mines employed miners working underground. These 613 mines employed approximately 37,800 miners and 5,100 contractors working underground, for a total of approximately 42,900 underground employees.

B. Benefits

1. Introduction

One of the goals of the MINER Act is to improve emergency response capability in underground coal mines. MSHA has published a number of standards in the last several years and has stated in them that, in the event of a mine emergency in an underground coal mine, the miner should be trained to evacuate the mine. In addition, over the years, MSHA has published a number of standards that address the safety of miners in the event of explosions, fires, or inundations in underground coal mines. These standards include requirements concerning escape from a mine, such as: Two separate and distinct escapeways for each working section, maps in an underground mine that delineate escape routes out of the mine, miner participation in practice drills to escape the mine in an emergency situation, and life-saving devices such as lifelines and self-contained self-rescue (SCSR) devices to facilitate escape.

The final rule will increase miners' safety and improve mine operators' preparedness for mine emergencies by requiring refuge alternatives underground to protect and sustain miners trapped when a life-threatening event occurs that prevents escape.

2. Evaluation of Accident and Injury Data

MSHA has evaluated its accident and injury data from 1900 through 2006. During that period, 264 miners who were alive after a mine accident died later during rescue or escape. MSHA has estimated that recent MSHA standards could have saved the lives of 43 of these miners. Thus, for purposes of estimating benefits, this final rule could potentially have saved the lives of 221 miners over the 107 year period. If refuge alternatives had been available, MSHA estimates that the range of lives saved would have been between a low of 25 percent and a high of 75 percent. Using these estimates, the final rule potentially could save an average of from one to three lives every two years.

C. Compliance Costs

MSHA estimates that the total yearly cost of the final rule is approximately $53 million: $3 million for manufacturers and $50 million for underground coal mine operators. The first-year cost of the final rule is approximately $129 million. The costs in the REA represent what MSHA believes to be the upper bound of the range of estimated compliance costs. MSHA has presented these upper-bound estimates as a conservative approach to estimating compliance costs. Costs could be lower as mine operators evaluate their situation for using existing refuge alternatives under the requirements of the final rule.

By mine size, the estimated yearly cost is $4 million for operators with 1–19 employees; $41 million for operators with 20–500 employees; and $5 million for operators with 501+ employees.

The $53 million of yearly costs consist of approximately: $2.6 million for refuge alternative and component application and approval costs; $4 million for roof control plan information; $6 million for additional time for preshift examinations; $13 million for revisions to the mine emergency evacuation program of instruction, mine emergency evacuation training and drills; $27 million for refuge alternatives and emergency response plan and $0.5 million for revisions to maps, training and records for examination, maintenance and repair of refuge alternatives and components, and communication facilities.

Table 1 presents a summary of the yearly costs of the final rule by mine size and by cost category. In some cases the totals may deviate from the sum of the components due to rounding.

TABLE 1—SUMMARY OF YEARLY COSTS OF FINAL RULE

Requirement				Yearly cost
Cost to Manufacturers				
Application and Approval Costs				$2.6 million.
Cost to Mine Operators				
	Mine Size			
	1–19 employees	20–500 employees	501+ employees	Total
Roof Control Plan Information	$438,000	$3.2 million	$297,000	$4.0 million.
Preshift Examination	$235,000	$5.0 million	$923,000	$6.1 million.
Mine Emergency Evacuation and Firefighting Program of Instruction, Mine Emergency Evacuation Training and Drills.	$515,000	$10.3 million	$1.9 million	$12.8 million.
Refuge Alternatives and Emergency Response Plan.	$3.0 million	$21.9 million	$2.0 million	$26.9 million.
Other Provisions*	$60,000	$400,000	$30,000	$0.5 million.
Total Yearly Cost to Mine Operators	$4.3 million	$40.8 million	$5.2 million	$50.3 million.

* Includes Mine Ventilation Map; Mine Map; and Escapeway Maps; Training and Records for Examination, Maintenance, and Repair of Refuge Alternatives and Components; and Communication Facilities.

IV. Feasibility

MSHA has concluded that the requirements of the final rule are both technologically and economically feasible. MSHA, however, recognizes that not all refuge alternatives will be appropriate for all mining conditions. In addition, MSHA recognizes that some aspects of refuge alternatives involve developing technology; for example, wireless communications facilities and means of controlling the temperature inside refuge alternatives.

A. Technological Feasibility

Refuge alternatives are technologically feasible. They use commercially available technology that can reasonably be integrated into most coal mining operations. Refuge alternatives are currently being manufactured for, and some are currently in place, in underground coal mines. In addition, refuge alternative components are currently available. MSHA may approve refuge alternatives or components that incorporate new technology, if the applicant demonstrates that the refuge alternative or components provide no less protection than those meeting the requirements of the final rule.

MSHA recognizes that using refuge alternatives in mines with low seam heights could be problematic. However, the final rule has changed the proposed volume requirements to take seam height into consideration.

MSHA also recognizes that research on some requirements of the final rule is ongoing. For example, the final rule requires additional communication systems in the operator's approved Emergency Response Plan (ERP). MSHA is aware that these additional systems may not yet be available, but as they are developed, mine operators will be required to include them in their ERPs. The MINER Act requires, by June 15, 2009, that ERPs contain wireless communication systems. MSHA is working with NIOSH on this emerging technology and will provide further guidance to the mining community with respect to the Agency's expectations for ''wireless communication'' systems in ERPs.

B. Economic Feasibility

The yearly compliance cost of the final rule to underground coal mine operators is $50.3 million, which is approximately 0.4 percent of the total annual revenue of $14.0 billion ($50.3 million/$14.0 billion) for all underground coal mines. MSHA concludes that the final rule will be economically feasible for these mines because the total yearly compliance cost is below one percent of the estimated annual revenue for all underground coal mines.

V. Regulatory Flexibility Act and Small Business Regulatory Enforcement Fairness Act

Under the Regulatory Flexibility Act (RFA) of 1980, as amended by the Small Business Regulatory Enforcement Fairness Act (SBREFA), MSHA has analyzed the impact of the final rule on small entities. Based on that analysis, MSHA has notified the Chief Counsel for Advocacy, Small Business Administration (SBA), and made the certification under the RFA at 5 U.S.C. 605(b) that the final rule does not have a significant economic impact on a substantial number of small entities. The factual basis for this certification is presented in the REA and summarized below.

A. Definition of a Small Mine

Under the RFA, in analyzing the impact of the final rule on small entities, MSHA must use the SBA definition for a small entity, or after consultation with the SBA Office of Advocacy, establish an alternative definition for the mining industry by publishing that definition in the **Federal Register** for notice and comment. MSHA has not established an alternative definition and is required to use the SBA definition. The SBA defines a small entity in the mining industry as an establishment with 500 or fewer employees.

MSHA has also examined the impact of the final rule on underground coal mines with fewer than 20 employees, which MSHA has traditionally referred to as ''small mines.'' These small mines differ from larger mines not only in the number of employees, but also in economies of scale in material produced, in the type and amount of production equipment, and in supply inventory. Therefore, the cost of complying with MSHA's final rule and the impact of the final rule on mines with fewer than 20 employees will differ from the cost and impact on mines with 500 or fewer employees.

This analysis complies with the legal requirements of the RFA for an analysis of the impact on ''small entities'' while continuing MSHA's traditional concern for ''small mines.''

B. Factual Basis for Certification

MSHA initially evaluates the impact on small entities by comparing the estimated compliance cost of a rule for small entities in the sector affected by the rule to the estimated revenue of the affected sector. When the estimated compliance cost is less than one percent of the estimated revenue, the Agency believes it is generally appropriate to conclude that the rule will not have a significant economic impact on a substantial number of small entities. When the estimated compliance cost exceeds one percent of revenue, MSHA investigates whether further analysis is required.

Total underground coal production in 2007 was approximately 7.7 million tons for mines with 1 to 19 employees and 278 million tons for mines with 1 to 500 employees. Multiplying tons by the 2007 price of underground coal of $40.29 per ton, 2007 underground coal revenue was $310 million for mines with 1 to 19 employees and $11.2 billion for mines with 1 to 500 employees. The final rule will result in an average yearly cost per mine of approximately $19,000 for mines with 1 to 19 employees and $73,000 for mines with 1 to 500 employees. MSHA has provided in the REA to this final rule a complete analysis of the costs of the final rule for each size category of mines.

The estimated yearly cost of the final rule for underground coal mines with 1 to 19 employees is approximately $4.3 million, or approximately $19,000 per mine. This is equal to approximately 1.38 percent of annual revenues. MSHA estimates that some mines might experience costs somewhat higher than the average per mine in its size category while others might experience lower costs.

Under the SBA's definition of a small mine, the estimated yearly cost of the final rule for underground coal mines with 1 to 500 employees is approximately $45 million, or approximately $73,000 per mine. This is equal to approximately 0.40 percent of annual revenue. Even though the analysis reflects a range of impacts for different mine sizes, from 0.40 percent to 1.38 percent of annual revenue, the Agency concludes that this is not a significant economic impact on a substantial number of small mines. Because the yearly cost of the final rule is less than one percent of annual revenues for small underground coal mines, as defined by SBA, MSHA has certified that the final rule will not have a significant impact on a substantial number of small mining entities, as defined by SBA.

VI. Paperwork Reduction Act

A. Summary

The information collection package for the final rule has been assigned OMB

Control Number 1219–0146. The final rule contains information collection requirements that will affect requirements in existing paperwork packages with OMB Control Numbers 1219–0004, 1219–0054, 1219–0066, 1219–0073, 1219–0088, and 1219–0141. The information collection requirements contained in the final rule are found in final §§ 7.503, 75.221, 75.360, 75.372, 75.1200, 75.1502, 75.1505, 75.1507, and 75.1508. The final rule will result in 87,732 burden hours and related costs of approximately $6.6 million in the first year the rule is in effect. In the second year the rule is in effect, and every year thereafter, the final rule will result in 75,681 burden hours and related costs of approximately $6.4 million.

For a detailed summary of the burden hours and related costs by provision, see the REA accompanying the final rule. The REA is posted on MSHA's Web site at *http://www.msha.gov/REGSINFO.HTM.* A copy of the REA can be obtained from MSHA's Office of Standards, Regulations, and Variances at the address provided in the **ADDRESSES** section of this preamble.

B. Procedural Details

The information collection package has been submitted to OMB for review under 44 U.S.C. 3504, paragraph (h) of the Paperwork Reduction Act of 1995, as amended. A copy of the information collection package can be obtained from the Department of Labor by electronic mail request to *king.darrin@dol.gov* or by phone request to 202–693–4129.

Since the proposed rule was published, MSHA has not received any substantive comments on the information collection package.

VII. Other Regulatory Analyses

A. The Unfunded Mandates Reform Act of 1995

MSHA has reviewed the final rule under the Unfunded Mandates Reform Act of 1995 (2 U.S.C. 1501 *et seq.*). MSHA has determined that the final rule does not include any Federal mandate that may result in increased expenditures by State, local, or tribal governments or significantly or uniquely affect small governments. MSHA estimates that the final rule will increase private sector expenditures by more than $100 million in the first year and has included an analysis of the costs of the requirements of the final rule in the REA.

B. Treasury and General Government Appropriations Act of 1999: Assessment of Federal Regulations and Policies on Families

The final rule has no effect on family well-being or stability, marital commitment, parental rights or authority, or income or poverty of families and children. Accordingly, § 654 of the Treasury and General Government Appropriations Act of 1999 (5 U.S.C. 601 note) requires no further agency action, analysis, or assessment.

C. Executive Order 12630: Government Actions and Interference With Constitutionally Protected Property Rights

The final rule does not implement a policy with takings implications. Accordingly, Executive Order 12630 requires no further agency action or analysis.

D. Executive Order 12988: Civil Justice Reform

The final rule was written to provide a clear legal standard for affected conduct and was carefully reviewed to eliminate drafting errors and ambiguities, so as to minimize litigation and undue burden on the Federal court system. Accordingly, the final rule meets the applicable standards provided in § 3 of Executive Order 12988.

E. Executive Order 13045: Protection of Children From Environmental Health Risks and Safety Risks

The final rule has no adverse impact on children. Accordingly, Executive Order 13045 requires no further agency action or analysis.

F. Executive Order 13132: Federalism

The final rule does not have ''federalism implications'' because it does not ''have substantial direct effects on the States, on the relationship between the national government and the States, or on the distribution of power and responsibilities among the various levels of government.'' West Virginia and Illinois have laws on refuge alternatives and MSHA has drafted the final rule to minimize conflict with these laws.

G. Executive Order 13175: Consultation and Coordination With Indian Tribal Governments

The final rule does not have ''tribal implications'' because it does not ''have substantial direct effects on one or more Indian tribes, on the relationship between the Federal government and Indian tribes, or on the distribution of power and responsibilities between the Federal government and Indian tribes.'' Accordingly, Executive Order 13175 requires no further agency action or analysis.

H. Executive Order 13211: Actions Concerning Regulations That Significantly Affect Energy Supply, Distribution, or Use

The final rule has been reviewed for its impact on the supply, distribution, and use of energy because it applies to the coal mining industry. Insofar as the final rule will result in yearly costs of approximately $50 million to the underground coal mining industry, relative to annual revenues of $14.0 billion in 2007, it is not a ''significant energy action'' because it is not ''likely to have a significant adverse effect on the supply, distribution, or use of energy * * * (including a shortfall in supply, price increases, and increased use of foreign supplies).'' Accordingly, Executive Order 13211 requires no further Agency action or analysis.

I. Executive Order 13272: Proper Consideration of Small Entities in Agency Rulemaking

MSHA has reviewed the final rule to assess and take appropriate account of its potential impact on small businesses, small governmental jurisdictions, and small organizations. MSHA has determined and certified that the final rule does not have a significant economic impact on a substantial number of small entities.

List of Subjects

30 CFR Part 7

Coal mines, Incorporation by reference, Mine safety and health, Reporting and recordkeeping requirements, Underground mining.

30 CFR Part 75

Coal mines, Mine safety and health, Reporting and recordkeeping requirements, Safety, Training programs, Underground mining.

Dated: December 19, 2008.

Richard E. Stickler,

Acting Assistant Secretary for Mine Safety and Health.

■ For the reasons set out in the preamble, and under the authority of the Federal Mine Safety and Health Act of 1977 as amended by the Mine Improvement and New Emergency Response Act of 2006, MSHA is amending chapter I of title 30 of the Code of Federal Regulations as follows:

PART 7—TESTING BY APPLICANT OR THIRD PARTY—[AMENDED]

■ 1. The authority citation for part 7 continues to read as follows:

Authority: 30 U.S.C. 957.

■ 2. Add new subpart L to read as follows:

Subpart L—Refuge Alternatives

Sec.
7.501 Purpose and scope.
7.502 Definitions.
7.503 Application requirements.
7.504 Refuge alternatives and components; general requirements.
7.505 Structural components.
7.506 Breathable air components.
7.507 Air-monitoring components.
7.508 Harmful gas removal components.
7.509 Approval markings.
7.510 New technology.

§ 7.501 Purpose and scope.

This subpart L establishes requirements for MSHA approval of refuge alternatives and components for use in underground coal mines. Refuge alternatives are intended to provide a life-sustaining environment for persons trapped underground when escape is impossible.

§ 7.502 Definitions.

The following definitions apply in this subpart:

Apparent temperature. A measure of relative discomfort due to the combined effects of air movement, heat, and humidity on the human body.

Breathable oxygen. Oxygen that is at least 99 percent pure with no harmful contaminants.

Flash fire. A fire that rapidly spreads through a diffuse fuel, such as airborne coal dust or methane, without producing damaging pressure.

Noncombustible material. Material, such as concrete or steel, that will not ignite, burn, support combustion, or release flammable vapors when subjected to fire or heat.

Overpressure. The highest pressure over the background atmospheric pressure that could result from an explosion, which includes the impact of the pressure wave on an object.

Refuge alternative. A protected, secure space with an isolated atmosphere and integrated components that create a life-sustaining environment for persons trapped in an underground coal mine.

§ 7.503 Application requirements.

(a) An application for approval of a refuge alternative or component shall include:

(1) The refuge alternative's or component's make and model number, if applicable.

(2) A list of the refuge alternative's or component's parts that includes—

(i) The MSHA approval number for electric-powered equipment;

(ii) Each component's or part's in-mine shelf life, service life, and recommended replacement schedule;

(iii) Materials that have a potential to ignite used in each component or part with their MSHA approval number; and

(iv) A statement that the component or part is compatible with other components and, upon replacement, is equivalent to the original component or part.

(3) The capacity and duration (the number of persons it is designed to maintain and for how long) of the refuge alternative or component on a per-person per-hour basis.

(4) The length, width, and height of the space required for storage of each component.

(b) The application for approval of the refuge alternative shall include the following:

(1) A description of the breathable air component, including drawings, air-supply sources, piping, regulators, and controls.

(2) The maximum volume, excluding the airlock; the dimensions of floor space and volume provided for each person using the refuge alternative; and the floor space and volume of the airlock.

(3) The maximum positive pressures in the interior space and the airlock and a description of the means used to limit or control the positive pressure.

(4) The maximum allowable apparent temperature of the interior space and the airlock and the means to control the apparent temperature.

(5) The maximum mine air temperature under which the refuge alternative is designed to operate when the unit is fully occupied.

(6) Drawings that show the features of each component and contain sufficient information to document compliance with the technical requirements.

(7) A manual that contains sufficient detail for each refuge alternative or component addressing in-mine transportation, operation, and maintenance of the unit.

(8) A summary of the procedures for deploying refuge alternatives.

(9) A summary of the procedures for using the refuge alternative.

(10) The results of inspections, evaluations, calculations, and tests conducted under this subpart.

(c) The application for approval of the air-monitoring component shall specify the following:

(1) The operating range, type of sensor, gas or gases measured, and environmental limitations, including the cross-sensitivity to other gases, of each detector or device in the air-monitoring component.

(2) The procedure for operation of the individual devices so that they function as necessary to test gas concentrations over a 96-hour period.

(3) The procedures for monitoring and maintaining breathable air in the airlock, before and after purging.

(4) The instructions for determining the quality of the atmosphere in the airlock and refuge alternative interior and a means to maintain breathable air in the airlock.

(d) The application for approval of the harmful gas removal component shall specify the following:

(1) The volume of breathable air available for removing harmful gas both at start-up and while persons enter through the airlock.

(2) The maximum volume of each gas that the component is designed to remove on a per-person per-hour basis.

§ 7.504 Refuge alternatives and components; general requirements.

(a) Refuge alternatives and components:

(1) Electrical components that are exposed to the mine atmosphere shall be approved as intrinsically safe for use. Electrical components located inside the refuge alternative shall be either approved as intrinsically safe or approved as permissible.

(2) Shall not produce continuous noise levels in excess of 85 dBA in the structure's interior.

(3) Shall not liberate harmful or irritating gases or particulates into the structure's interior or airlock.

(4) Shall be designed so that the refuge alternative can be safely moved with the use of appropriate devices such as tow bars.

(5) Shall be designed to withstand forces from collision of the refuge alternative structure during transport or handling.

(b) The apparent temperature in the structure shall be controlled as follows:

(1) When used in accordance with the manufacturer's instructions and defined limitations, the apparent temperature in the fully occupied refuge alternative shall not exceed 95 degrees Fahrenheit (°F).

(2) Tests shall be conducted to determine the maximum apparent temperature in the refuge alternative when used at maximum occupancy and in conjunction with required components. Test results including calculations shall be reported in the application.

(c) The refuge alternative shall include:

(1) A two-way communication facility that is a part of the mine communication system, which can be

used from inside the refuge alternative; and accommodations for an additional communication system and other requirements as defined in the communications portion of the operator's approved Emergency Response Plan.

(2) Lighting sufficient for persons to perform tasks.

(3) A means to contain human waste effectively and minimize objectionable odors.

(4) First aid supplies.

(5) Materials, parts, and tools for repair of components.

(6) A fire extinguisher that—

(i) Meets the requirements for portable fire extinguishers used in underground coal mines under part 75;

(ii) Is appropriate for extinguishing fires involving the chemicals used for harmful gas removal; and

(iii) Uses a low-toxicity extinguishing agent that does not produce a hazardous by-product when deployed.

(d) Containers used for storage of refuge alternative components or provisions shall be—

(1) Airtight, waterproof, and rodent-proof;

(2) Easy to open and close without the use of tools; and

(3) Conspicuously marked with an expiration date and instructions for use.

§ 7.505 Structural components.

(a) The structure shall—

(1) Provide at least 15 square feet of floor space per person and 30 to 60 cubic feet of volume per person according to the following chart. The airlock can be included in the space and volume if waste is disposed outside the refuge alternative.

Mining height (inches)	Unrestricted volume (cubic feet) per person *
36 or less	30
>36–≤42	37.5
>42–≤48	45
>48–≤54	52.5
>54	60

* Includes an adjustment of 12 inches for clearances.

(2) Include storage space that secures and protects the components during transportation and that permits ready access to components for maintenance examinations.

(3) Include an airlock that creates a barrier and isolates the interior space from the mine atmosphere, except for a refuge alternative capable of maintaining adequate positive pressure.

(i) The airlock shall be designed for multiple uses to accommodate the structure's maximum occupancy.

(ii) The airlock shall be configured to accommodate a stretcher without compromising its function.

(4) Be designed and made to withstand 15 pounds per square inch (psi) overpressure for 0.2 seconds prior to deployment.

(5) Be designed and made to withstand exposure to a flash fire of 300 °F for 3 seconds prior to deployment.

(6) Be made with materials that do not have a potential to ignite or are MSHA-approved.

(7) Be made from reinforced material that has sufficient durability to withstand routine handling and resist puncture and tearing during deployment and use.

(8) Be guarded or reinforced to prevent damage to the structure that would hinder deployment, entry, or use.

(9) Permit measurement of outside gas concentrations without exiting the structure or allowing entry of the outside atmosphere.

(b) Inspections or tests shall be conducted as follows:

(1) A test shall be conducted to demonstrate that trained persons can fully deploy the structure, without the use of tools, within 10 minutes of reaching the refuge alternative.

(2) A test shall be conducted to demonstrate that an overpressure of 15 psi applied to the pre-deployed refuge alternative structure for 0.2 seconds does not allow gases to pass through the structure separating the interior and exterior atmospheres.

(3) A test shall be conducted to demonstrate that a flash fire of 300 °F for 3 seconds does not allow gases to pass from the outside to the inside of the structure.

(4) An inspection shall be conducted to determine that the overpressure forces of 15 psi applied to the pre-deployed refuge alternative structure for 0.2 seconds does not prevent the stored components from operating.

(5) An inspection shall be conducted to determine that a flash fire of 300 °F for 3 seconds does not prevent the stored components from operating.

(6) A test shall be conducted to demonstrate that each structure resists puncture and tearing when tested in accordance with ASTM D2582–07 *Standard Test Method for Puncture-Propagation Tear Resistance of Plastic Film and Thin Sheeting.* This publication is incorporated by reference. The Director of the Federal Register approves this incorporation by reference in accordance with 5 U.S.C. 552(a) and 1 CFR part 51. A copy may be obtained from the American Society for Testing Materials (ASTM), 100 Barr Harbor Drive, West Conshohocken, Pennsylvania 19428–2959. A copy may be inspected at any MSHA Coal Mine Safety and Health district office,; or at MSHA's Office of Standards, 1100 Wilson Blvd., Room 2353, Arlington, Virginia 22209 (phone: 202–693–9440); or at the National Archives and Records Administration (NARA). For information on the availability of this material at NARA, call 202–741–6030, or go to: *http://www.archives.gov/federal_register/code_of_federal_regulations/ibr_locations.html.*

(7) A test shall be conducted to demonstrate that each reasonably anticipated repair can be completed within 10 minutes of opening the storage space for repair materials and tools.

(8) A test shall be conducted to demonstrate that no harmful gases or noticeable odors are released from nonmetallic materials before or after the flash fire test. The test shall identify the gases released and determine their concentrations.

(c) If pressurized air is used to deploy the structure or maintain its shape, the structure shall—

(1) Include a pressure regulator or other means to prevent over pressurization of the structure, and

(2) Provide a means to repair and re-pressurize the structure in case of failure of the structure or loss of air pressure.

(d) The refuge alternative structure shall provide a means—

(1) To conduct a preshift examination, without entering the structure, of components critical for deployment; and

(2) To indicate unauthorized entry or tampering.

§ 7.506 Breathable air components.

(a) Breathable air shall be supplied by compressed air cylinders, compressed breathable-oxygen cylinders, or boreholes with fans installed on the surface or compressors installed on the surface. Only uncontaminated breathable air shall be supplied to the refuge alternative.

(b) Mechanisms shall be provided and procedures shall be included so that, within the refuge alternative,—

(1) The breathable air sustains each person for 96 hours,

(2) The oxygen concentration is maintained at levels between 18.5 and 23 percent, and

(3) The average carbon dioxide concentration is 1.0 percent or less and excursions do not exceed 2.5 percent.

(c) Breathable air supplied by compressed air from cylinders, fans, or compressors shall provide a minimum flow rate of 12.5 cubic feet per minute of breathable air for each person.

(1) Fans or compressors shall meet the following:

(i) Be equipped with a carbon monoxide detector located at the surface that automatically provides a visual and audible alarm if carbon monoxide in supplied air exceeds 10 parts per million (ppm).

(ii) Provide in-line air-purifying sorbent beds and filters or other equivalent means to assure the breathing air quality and prevent condensation, and include maintenance instructions that provide specifications for periodic replacement or refurbishment.

(iii) Provide positive pressure and an automatic means to assure that the pressure is relieved at 0.18 psi, or as specified by the manufacturer, above mine atmospheric pressure in the refuge alternative.

(iv) Include warnings to assure that only uncontaminated breathable air is supplied to the refuge alternative.

(v) Include air lines to supply breathable air from the fan or compressor to the refuge alternative.

(A) Air lines shall be capable of preventing or removing water accumulation.

(B) Air lines shall be designed and protected to prevent damage during normal mining operations, a flash fire of 300 °F for 3 seconds, a pressure wave of 15 psi overpressure for 0.2 seconds, and ground failure.

(vi) Assure that harmful or explosive gases, water, and other materials cannot enter the breathable air.

(2) Redundant fans or compressors and power sources shall be provided to permit prompt re-activation of equipment in the event of failure.

(d) Compressed breathable oxygen shall—

(1) Include instructions for deployment and operation;

(2) Provide oxygen at a minimum flow rate of 1.32 cubic feet per hour per person;

(3) Include a means to readily regulate the pressure and volume of the compressed oxygen;

(4) Include an independent regulator as a backup in case of failure; and

(5) Be used only with regulators, piping, and other equipment that is certified and maintained to prevent ignition or combustion.

(e) The applicant shall prepare and submit an analysis or study demonstrating that the breathable air component will not cause an ignition.

(1) The analysis or study shall specifically address oxygen fire hazards and fire hazards from chemicals used for removal of carbon dioxide.

(2) The analysis or study shall identify the means used to prevent any ignition source.

§ 7.507 Air-monitoring components.

(a) Each refuge alternative shall have an air-monitoring component that provides persons inside with the ability to determine the concentrations of carbon dioxide, carbon monoxide, oxygen, and methane, inside and outside the structure, including the airlock.

(b) Refuge alternatives designed for use in mines with a history of harmful gases, other than carbon monoxide, carbon dioxide, and methane, shall be equipped to measure the harmful gases' concentrations.

(c) The air-monitoring component shall be inspected or tested and the test results shall be included in the application.

(d) The air-monitoring component shall meet the following:

(1) The total measurement error, including the cross-sensitivity to other gases, shall not exceed ± 10 percent of the reading, except as specified in the approval.

(2) The measurement error limits shall not be exceeded after start-up, after 8 hours of continuous operation, after 96 hours of storage, and after exposure to atmospheres with a carbon monoxide concentration of 999 ppm (full-scale), a carbon dioxide concentration of 3 percent, and full-scale concentrations of other gases.

(3) Calibration gas values shall be traceable to the National Institute for Standards and Technology (NIST) ''Standard Reference Materials'' (SRMs).

(4) The analytical accuracy of the calibration gas and span gas values shall be within 2.0 percent of NIST gas standards.

(5) The detectors shall be capable of being kept fully charged and ready for immediate use.

§ 7.508 Harmful gas removal components.

(a) Each refuge alternative shall include means for removing harmful gases.

(1) Purging or other effective procedures shall be provided for the airlock to dilute the carbon monoxide concentration to 25 ppm or less and the methane concentration to 1.0 percent or less as persons enter, within 20 minutes of persons deploying the refuge alternative.

(2) Chemical scrubbing or other effective procedures shall be provided so that the average carbon dioxide concentration in the occupied structure shall not exceed 1.0 percent over the rated duration, and excursions shall not exceed 2.5 percent.

(i) Carbon dioxide removal components shall be used with breathable air cylinders or oxygen cylinders.

(ii) Carbon dioxide removal components shall remove carbon dioxide at a rate of 1.08 cubic feet per hour per person.

(3) Instructions shall be provided for deployment and operation of the harmful gas removal component.

(b) The harmful gas removal component shall meet the following requirements: Each chemical used for removal of harmful gas shall be—

(1) Contained such that when stored or used it cannot come in contact with persons, and it cannot release airborne particles.

(2) Provided with all materials; parts, such as hangers, racks, and clips; equipment; and instructions necessary for deployment and use.

(3) Stored in an approved container that is conspicuously marked with the manufacturer's instructions for disposal of used chemical.

(c) Each harmful gas removal component shall be tested to determine its ability to remove harmful gases.

(1) The component shall be tested in a refuge alternative structure that is representative of the configuration and maximum volume for which the component is designed.

(i) The test shall include three sampling points located vertically along the centerlines of the length and width of the structure and equally spaced over the horizontal centerline of the height of the structure.

(ii) The structure shall be sealed airtight.

(iii) The operating gas sampling instruments shall be placed inside the structure and continuously exposed to the test atmosphere.

(iv) Sampling instruments shall simultaneously measure the gas concentrations at the three sampling points.

(2) For testing the component's ability to remove carbon monoxide, the structure shall be filled with a test gas of either purified synthetic air or purified nitrogen that contains 400 ppm carbon monoxide, ±5 percent.

(i) After a stable concentration of 400 ppm, ±5 percent, carbon monoxide has been obtained for 5 minutes at all three sampling points, a timer shall be started and the structure shall be purged or carbon monoxide otherwise removed.

(ii) Carbon monoxide concentration readings from each of the three sampling instruments shall be recorded every 2 minutes.

(iii) The time shall be recorded from the start of harmful gas removal until

the readings of the three sampling instruments all indicate a carbon monoxide concentration of 25 ppm or less.

(3) For testing the component's ability to remove carbon dioxide, the carbon dioxide concentration shall not exceed 1.0 percent over the rated duration and excursions shall not exceed 2.5 percent under the following conditions:

(i) At 55 °F (±4 °F), 1 atmosphere (±1 percent), and 50 percent (±5 percent) relative humidity.

(ii) At 55 °F (±4 °F), 1 atmosphere (±1 percent), and 100 percent (±5 percent) relative humidity.

(iii) At 90 °F (±4 °F), 1 atmosphere (±1 percent), and 50 percent (±5 percent) relative humidity.

(iv) At 82 °F (±4 °F), 1 atmosphere (±1 percent), and 100 percent (±5 percent) relative humidity.

(4) Testing shall demonstrate the component's continued ability to remove harmful gases effectively throughout its designated shelf-life, specifically addressing the effects of storage and transportation.

(d) Alternate performance tests may be conducted if the tests provide the same level of assurance of the harmful gas removal component's capability as the tests specified in paragraph (c) of this section. Alternate tests shall be specified in the approval application.

§ 7.509 Approval markings.

(a) Each approved refuge alternative or component shall be identified by a legible, permanent approval marking that is securely and conspicuously attached to the component or its container.

(b) The approval marking shall be inscribed with the component's MSHA approval number and any additional markings required by the approval.

(c) The refuge alternative structure shall provide a conspicuous means for indicating an out-of-service status, including the reason it is out of service.

(d) The airlock shall be conspicuously marked with the recommended maximum number of persons that can use it at one time.

§ 7.510 New technology.

MSHA may approve a refuge alternative or a component that incorporates new knowledge or technology, if the applicant demonstrates that the refuge alternative or component provides no less protection than those meeting the requirements of this subpart.

PART 75—MANDATORY SAFETY STANDARDS–UNDERGROUND COAL MINES—[AMENDED]

■ 3. The authority citation for part 75 continues to read as follows:

Authority: 30 U.S.C. 811.

■ 4. Amend § 75.221 by adding paragraph (a)(12) to read as follows:

§ 75.221 Roof control plan information.

(a) * * *

(12) A description of the roof and rib support necessary for the refuge alternatives.

* * * * *

■ 5. Amend § 75.313 by adding paragraph (f) to read as follows:

§ 75.313 Main mine fan stoppage with persons underground.

* * * * *

(f) Any electrical refuge alternative components exposed to the mine atmosphere shall be approved as intrinsically safe for use during fan stoppages. Any electrical refuge alternative components located inside the refuge alternative shall be either approved as intrinsically safe or approved as permissible for use during fan stoppages.

■ 6. Amend § 75.360 by redesignating paragraphs (d) through (g) as paragraphs (e) through (h) and adding a new paragraph (d) to read as follows:

§ 75.360 Preshift examination at fixed intervals.

* * * * *

(d) The person conducting the preshift examination shall check the refuge alternative for damage, the integrity of the tamper-evident seal and the mechanisms required to deploy the refuge alternative, and the ready availability of compressed oxygen and air.

* * * * *

■ 7. Amend § 75.372 by revising paragraph (b)(11) to read as follows:

§ 75.372 Mine ventilation map.

* * * * *

(b) * * *

(11) The location of all escapeways and refuge alternatives.

* * * * *

■ 8. Amend § 75.1200–1 by adding paragraph (n) to read as follows:

§ 75.1200–1 Additional information on mine map.

* * * * *

(n) The locations of refuge alternatives.

■ 9. Amend § 75.1202–1 by revising paragraph (b)(4) to read as follows:

§ 75.1202–1 Temporary notations, revisions, and supplements.

* * * * *

(b) * * *

(4) Escapeways and refuge alternatives designated by means of symbols.

§ 75.1500 [Reserved]

■ 10. Remove and reserve § 75.1500.

■ 11. Amend § 75.1501 by revising paragraph (a)(1) to read as follows:

§ 75.1501 Emergency evacuations.

(a) * * *

(1) The responsible person shall have current knowledge of the assigned location and expected movements of miners underground, the operation of the mine ventilation system, the locations of the mine escapeways and refuge alternatives, the mine communications system, any mine monitoring system if used, locations of firefighting equipment, the mine's Emergency Response Plan, the Mine Rescue Notification Plan, and the Mine Emergency Evacuation and Firefighting Program of Instruction.

* * * * *

■ 12. Amend § 75.1502 as follows:

■ A. Redesignating paragraphs (c)(3) through (c)(8) as paragraphs (c)(4) through (c)(9).

■ B. Add paragraph (c)(3).

■ C. Revise paragraphs (c)(4)(iv) and (v).

■ D. Add paragraph (c)(4)(vi).

■ E. Revise paragraph (c)(8).

■ F. Add paragraphs (c)(10) through (c)(12).

The revisions read as follows:

§ 75.1502 Mine emergency evacuation and firefighting program of instruction.

* * * * *

(c) * * *

* * * * *

(3) The deployment, use, and maintenance of refuge alternatives.

(4) * * *

(iv) Switching escapeways, as applicable;

(v) Negotiating any other unique escapeway conditions; and

(vi) Using refuge alternatives.

* * * * *

(8) A review of the mine map; the escapeway system; the escape, firefighting, and emergency evacuation plan in effect at the mine; and the locations of refuge alternatives and abandoned areas.

* * * * *

(10) A summary of the procedures related to deploying refuge alternatives.

(11) A summary of the construction methods for 15 psi stoppings constructed prior to an event.

(12) A summary of the procedures related to refuge alternative use.

* * * * *

■ 13. Amend § 75.1504 by revising paragraphs (b)(3)(ii), (b)(4)(ii), and (c), and adding paragraphs (b)(6), (b)(7), (b)(8), and (b)(9) to read as follows:

§ 75.1504 Mine emergency evacuation training and drills.

* * * * *

(b) * * *

(3) * * *

(ii) Physically locates and practices using the continuous directional lifelines or equivalent devices and tethers, and physically locates the stored SCSRs and refuge alternatives;

* * * * *

(4) * * *

(ii) Locating escapeways, exits, routes of travel to the surface, abandoned areas, and refuge alternatives.

* * * * *

(6) Reviewing the procedures for deploying refuge alternatives and components.

(7) For miners who will be constructing the 15 psi stoppings prior to an event, reviewing the procedures for constructing them.

(8) Reviewing the procedures for use of the refuge alternatives and components.

(9) Task training in proper transportation of the refuge alternatives and components.

(c) *Annual expectations training.* Over the course of each year, each miner shall participate in expectations training that includes the following:

(1) Donning and transferring SCSRs in smoke, simulated smoke, or an equivalent environment.

(2) Breathing through a realistic SCSR training unit that provides the sensation of SCSR airflow resistance and heat.

(3) Deployment and use of refuge alternatives similar to those in use at the mine, including—

(i) Deployment and operation of component systems; and

(ii) Instruction on when to use refuge alternatives during a mine emergency, emphasizing that it is the last resort when escape is impossible.

(4) A miner shall participate in expectations training within one quarter of being employed at the mine.

* * * * *

■ 14. Amend § 75.1505 by revising paragraphs (a) and (b) to read as follows:

§ 75.1505 Escapeway maps.

(a) *Content and accessibility.* An escapeway map shall show the designated escapeways from the working sections or the miners' work stations to the surface or the exits at the bottom of the shaft or slope, refuge alternatives, and SCSR storage locations. The escapeway map shall be posted or readily accessible for all miners—

(1) In each working section;

(2) In each area where mechanized mining equipment is being installed or removed;

(3) At the refuge alternative; and

(4) At a surface location of the mine where miners congregate, such as at the mine bulletin board, bathhouse, or waiting room.

(b) *Keeping maps current.* All maps shall be kept up-to-date and any change in route of travel, location of doors, location of refuge alternatives, or direction of airflow shall be shown on the maps by the end of the shift on which the change is made.

* * * * *

■ 15. Add § 75.1506 to subpart P of this part to read as follows:

§ 75.1506 Refuge alternatives.

(a) Each operator shall provide refuge alternatives and components as follows:

(1) Prefabricated self-contained units, including the structural, breathable air, air monitoring, and harmful gas removal components of the unit, shall be approved under 30 CFR part 7; and

(2) The structural components of units consisting of 15 psi stoppings constructed prior to an event shall be approved by the District Manager, and the breathable air, air monitoring, and harmful gas removal components of these units shall be approved under 30 CFR part 7.

(3) Prefabricated refuge alternative structures that states have approved and those that MSHA has accepted in approved Emergency Response Plans (ERPs) that are in service prior to March 2, 2009 are permitted until December 31, 2018, or until replaced, whichever comes first. Breathable air, air-monitoring, and harmful gas removal components of either a prefabricated self-contained unit or a unit consisting of 15 psi stoppings constructed prior to an event in a secure space and an isolated atmosphere that states have approved and those that MSHA has accepted in approved ERPs that are in use prior to March 2, 2009 are permitted until December 31, 2013, or until replaced, whichever comes first. Refuge alternatives consisting of materials pre-positioned for miners to deploy in a secure space with an isolated atmosphere that MSHA has accepted in approved ERPs that are in use prior to March 2, 2009 are permitted until December 31, 2010, or until replaced, whichever comes first.

(b) Except as permitted under paragraph (a)(3) of this section, each operator shall provide refuge alternatives with sufficient capacity to accommodate all persons working underground.

(1) Refuge alternatives shall provide at least 15 square feet of floor space per person and 30 to 60 cubic feet of volume per person according to the following chart. The airlock can be included in the space and volume if waste is disposed outside the refuge alternative.

Mining height (inches)	Unrestricted volume (cubic feet) per person*
36 or less	30
>36–≤42	37.5
>42–≤48	45
>48–≤54	52.5
>54	60

* Includes an adjustment of 12 inches for clearances.

(2) Refuge alternatives for working sections shall accommodate the maximum number of persons that can be expected on or near the section at any time.

(3) Each refuge alternative for outby areas shall accommodate persons reasonably expected to use it.

(c) Refuge alternatives shall be provided at the following locations:

(1) Within 1,000 feet from the nearest working face and from locations where mechanized mining equipment is being installed or removed except that for underground anthracite coal mines that have no electrical face equipment, refuge alternatives shall be provided if the nearest working face is greater than 2,000 feet from the surface.

(2) Spaced within one-hour travel distances in outby areas where persons work such that persons in outby areas are never more than a 30-minute travel distance from a refuge alternative or safe exit. However, the operator may request and the District Manager may approve a different location in the ERP. The operator's request shall be based on an assessment of the risk to persons in outby areas, considering the following factors: proximity to seals; proximity to potential fire or ignition sources; conditions in the outby areas; location of stored SCSRs; and proximity to the most direct, safe, and practical route to an intake escapeway.

(d) Roof and rib support for refuge alternative locations shall be specified in the mine's roof control plan.

(e) The operator shall protect the refuge alternative and contents from damage during transportation, installation, and storage.

(f) A refuge alternative shall be removed from service if examination

reveals damage that interferes with the functioning of the refuge alternative or any component.

(1) If a refuge alternative is removed from service, the operator shall withdraw all persons from the area serviced by the refuge alternative, except those persons referred to in § 104(c) of the Mine Act.

(2) Refuge alternative components removed from service shall be replaced or be repaired for return to service in accordance with the manufacturer's specifications.

(g) At all times, the site and area around the refuge alternative shall be kept clear of machinery, materials, and obstructions that could interfere with the deployment or use of the refuge alternative.

(h) Each refuge alternative shall be conspicuously identified with a sign or marker as follows:

(1) A sign or marker made of a reflective material with the word ''REFUGE'' shall be posted conspicuously at each refuge alternative.

(2) Directional signs made of a reflective material shall be posted leading to each refuge alternative location.

(i) During use of the refuge alternative, the atmosphere within the refuge alternative shall be monitored. Changes or adjustments shall be made to reduce the concentration of methane to less than 1 percent; to reduce the concentration of carbon dioxide to 1 percent or less and excursions not exceeding 2.5 percent; and to reduce the concentration of carbon monoxide to 25 ppm or less. Oxygen shall be maintained at 18.5 to 23 percent.

(j) Refuge alternatives shall contain a fire extinguisher that—

(1) Meets the requirements for portable fire extinguishers used in underground coal mines under this part;

(2) Is appropriate for extinguishing fires involving the chemicals used for harmful gas removal; and

(3) Uses a low-toxicity extinguishing agent that does not produce a hazardous by-product when activated.

■ 16. Add § 75.1507 to subpart P of this part to read as follows:

§ 75.1507 Emergency Response Plan; refuge alternatives.

(a) The Emergency Response Plan (ERP) shall include the following for each refuge alternative and component:

(1) The types of refuge alternatives used in the mine, *i.e.*, a prefabricated self-contained unit or a unit consisting of 15 psi stoppings constructed prior to an event in a secure space and an isolated atmosphere.

(2) Procedures or methods for maintaining approved refuge alternatives and components.

(3) The rated capacity of each refuge alternative, the number of persons expected to use each refuge alternative, and the duration of breathable air provided per person by the approved breathable air component of each refuge alternative.

(4) The methods for providing breathable air with sufficient detail of the component's capability to provide breathable air over the duration stated in the approval.

(5) The methods for providing ready backup oxygen controls and regulators.

(6) The methods for providing an airlock and for providing breathable air in the airlock, except where adequate positive pressure is maintained.

(7) The methods for providing sanitation facilities.

(8) The methods for harmful gas removal, if necessary.

(9) The methods for monitoring gas concentrations, including charging and calibration of equipment.

(10) The method for providing lighting sufficient for persons to perform tasks.

(11) Suitable locations for the refuge alternatives and an affirmative statement that the locations are—

(i) Not within direct line of sight of the working face; and

(ii) Where feasible, not placed in areas directly across from, nor closer than 500 feet radially from, belt drives, take-ups, transfer points, air compressors, explosive magazines, seals, entrances to abandoned areas, and fuel, oil, or other flammable or combustible material storage. However, the operator may request and the District Manager may approve an alternative location in the ERP if mining involves two-entry systems or yield pillars in a longwall that would prohibit locating the refuge alternative out of direct line of sight of the working face.

(12) The maximum mine air temperature at each of the locations where refuge alternatives are to be placed.

(b) For a refuge alternative consisting of 15 psi stoppings constructed prior to an event in a secure space and an isolated atmosphere, the ERP shall specify that—

(1) The breathable air components shall be approved by MSHA; and

(2) The refuge alternative can withstand exposure to a flash fire of 300 degrees Fahrenheit (°F) for 3 seconds and a pressure wave of 15 pounds per square inch (psi) overpressure for 0.2 seconds.

(c) If the refuge alternative sustains persons for only 48 hours, the ERP shall detail advanced arrangements that have been made to assure that persons who cannot be rescued within 48 hours will receive additional supplies to sustain them until rescue. Advance arrangements shall include the following:

(1) Pre-surveyed areas for refuge alternatives with closure errors of less than 20,000:1.

(2) An analysis to demonstrate that the surface terrain, the strata, the capabilities of the drill rig, and all other factors that could affect drilling are such that a hole sufficient to provide required supplies and materials reliably can be promptly drilled within 48 hours of an accident at a mine.

(3) Permissions to cross properties, build roads, and construct drill sites.

(4) Arrangement with a drilling contractor or other supplier of drilling services to provide a suitable drilling rig, personnel and support so that a hole can be completed to the refuge alternative within 48 hours.

(5) Capability to promptly transport a drill rig to a pre-surveyed location such that a drilled hole would be completed and located near a refuge alternative structure within 48 hours of an accident at a mine.

(6) The specifications of pipes, air lines, and approved fans or approved compressors that will be used.

(7) A method for assuring that within 48 hours, breathable air shall be provided.

(8) A method for assuring the immediate availability of a backup source for supplying breathable air and a backup power source for surface installations.

(d) The ERP shall specify that the refuge alternative is stocked with the following:

(1) A minimum of 2,000 calories of food and 2.25 quarts of potable water per person per day in approved containers sufficient to sustain the maximum number of persons reasonably expected to use the refuge alternative for at least 96 hours, or for 48 hours if advance arrangements are made under paragraph (c) of this section;

(2) A manual that contains sufficient detail for each refuge alternative or component addressing in-mine transportation, operation, and maintenance of the unit;

(3) Sufficient quantities of materials and tools to repair components; and

(4) First aid supplies.

■ 17. Add § 75.1508 to subpart P of this part to read as follows:

§ 75.1508 Training and records for examination, maintenance and repair of refuge alternatives and components.

(a) Persons examining, maintaining, or repairing refuge alternatives and components shall be instructed in how to perform this work.

(1) The operator shall assure that all persons assigned to examine, maintain, and repair refuge alternatives and components are trained.

(2) The mine operator shall certify, by signature and date, the training of persons who examine, maintain, and repair refuge alternatives and components.

(b) At the completion of each repair, the person conducting the maintenance or repair shall make a record of all corrective action taken.

(c) Training certifications and repair records shall be kept at the mine for one year.

■ 18. Add § 75.1600–3 to subpart Q of this part to read as follows:

§ 75.1600–3 Communications facilities; refuge alternatives.

(a) Refuge alternatives shall be provided with a communications system that consists of—

(1) A two-way communication facility that is a part of the mine communication system, which can be used from inside the refuge alternative; and

(2) An additional communication system and other requirements as defined in the communications portion of the operator's approved Emergency Response Plan.

[FR Doc. E8–30669 Filed 12–30–08; 8:45 am]

BILLING CODE 4510–43–P

Reader Aids

Federal Register

Vol. 73, No. 251

Wednesday, December 31, 2008

CUSTOMER SERVICE AND INFORMATION

Federal Register/Code of Federal Regulations	
General Information, indexes and other finding aids	**202–741–6000**
Laws	**741–6000**
Presidential Documents	
Executive orders and proclamations	**741–6000**
The United States Government Manual	**741–6000**
Other Services	
Electronic and on-line services (voice)	**741–6020**
Privacy Act Compilation	**741–6064**
Public Laws Update Service (numbers, dates, etc.)	**741–6043**
TTY for the deaf-and-hard-of-hearing	**741–6086**

ELECTRONIC RESEARCH

World Wide Web

Full text of the daily Federal Register, CFR and other publications is located at: **http://www.gpoaccess.gov/nara/index.html**

Federal Register information and research tools, including Public Inspection List, indexes, and links to GPO Access are located at: **http://www.archives.gov/federal_register**

E-mail

FEDREGTOC-L (Federal Register Table of Contents LISTSERV) is an open e-mail service that provides subscribers with a digital form of the Federal Register Table of Contents. The digital form of the Federal Register Table of Contents includes HTML and PDF links to the full text of each document.

To join or leave, go to **http://listserv.access.gpo.gov** and select *Online mailing list archives, FEDREGTOC-L, Join or leave the list (or change settings);* then follow the instructions.

PENS (Public Law Electronic Notification Service) is an e-mail service that notifies subscribers of recently enacted laws.

To subscribe, go to **http://listserv.gsa.gov/archives/publaws-l.html** and select *Join or leave the list (or change settings);* then follow the instructions.

FEDREGTOC-L and **PENS** are mailing lists only. We cannot respond to specific inquiries.

Reference questions. Send questions and comments about the Federal Register system to: **fedreg.info@nara.gov**

The Federal Register staff cannot interpret specific documents or regulations.

FEDERAL REGISTER PAGES AND DATE, DECEMBER

72687–73148 1
73149–73544 2
73545–73760 3
73761–73994 4
73995–74342 5
74343–74604 8
74605–74926 9
74927–75304 10
75305–75534 11
75535–75926 12
75927–76190 15
76191–76502 16
76503–76846 17
76847–77472 18
77473–78148 19
78149–78586 22
78587–78916 23
78917–79266 24
79267–79584 29
79585–80288 30
80289–80700 31

CFR PARTS AFFECTED DURING DECEMBER

At the end of each month, the Office of the Federal Register publishes separately a List of CFR Sections Affected (LSA), which lists parts and sections affected by documents published since the revision date of each title.

3 CFR

Proclamations:
8324 73149
8325 73151
8326 74925
8327 75293
8328 75925
8329 78174
8330 78911
8331 79585
8332 80289

Executive Orders:
12171 (amended by 13480) 73991
13454 (superseded by 13483) 78587
13480 73991
13481 75531
13482 76501
13483 78587

Administrative Orders:
Memorandums:
Memorandum of July 10, 2002 (superseded by Memorandum of December 9, 2008) 75535
Memorandum of December 8, 2006 (superseded by EO 13481) 75531
Memorandum of December 9, 2008 75531
Memorandum of December 9, 2008 75535
Memorandum of December 23, 2008 79589
Presidential Determinations:
No. 2009-8 of December 4, 2008 76503
No. 2009-9 of December 18, 2008 80293

5 CFR

531 76847

Proposed Rules:
315 74071
316 74071
532 74374
591 74858
9901 73606
2417 79024

6 CFR

Proposed Rules:
5 .....74632, 74633, 74635, 74637, 75372, 75373, 77536, 77537, 77539, 77541, 77543, 77544, 77546, 77548, 77549, 77551, 77553

7 CFR

210 76847
245 76847
250 74605
278 79591
279 79595
301 75537
319 76863
400 76868
407 76868
457 .....76868, 80295
761 74343
762 74343
764 74343
767 74343
920 75537
927 78149
930 75927
946 .....74346, 75929
966 .....76191, 78150
984 .....73761, 73995, 78151
987 75931
993 75934
1000 78917
1001 78917
1005 78917
1006 78917
1007 78917
1030 78917
1032 78917
1033 78917
1124 78917
1126 78917
1131 78917
1280 76193
1400 79267
1412 79284
1430 73764
1779 76698
3575 76698
4279 76698
4280 76698
5001 76698

Proposed Rules:
319 74073
905 79028
930 74073
1205 72747
1220 74078
1487 73617
1493 76568

8 CFR

103 75540
204 78104
212 75540
214 .....75540, 76891, 78104
215 .....76891, 77473, 78104
217 79595
235 77473

245 75540
274a 76505, 76891
299 ....74605, 75540
1001 76914
1003 76914
1240 76927
1241 76927
1292 76914

9 CFR

94 78925
317 75564
381 75564

Proposed Rules:

2 77554
201 ....76288, 78661

10 CFR

30 78599
40 78599
50 78599
60 78599
61 78599
63 78599
70 78599
72 78599
75 78599
76 78599
95 78599
110 78599
150 78599

Proposed Rules:

430 74639
431 ....76569, 78220, 79723
440 79414
452 78663
1004 74658
1010 72748

11 CFR

100 79597
101 79597
102 79597
104 79597
110 79597
111 72687
113 79597
400 79597
9001 79597
9003 79597
9031 79597
9033 79597

12 CFR

3 79602
25 78153
201 79306
203 78616
204 78616
208 79602
225 79602
228 78153
229 77491
308 73153
325 79602
327 ....73158, 78155
345 78153
371 78162
516 76938
563e 78153
567 79602
575 76938
701 73392
702 72688
704 72688
712 79307
741 79307

Proposed Rules:

226 ....74989, 77554

13 CFR

120 75498
301 76194
302 76194
303 76194
305 76194
307 76194
308 76194
310 76194
314 76194
315 76194

14 CFR

1 ....73768, 76195
25 73997
39 ....73165, 73168, 73169, 73545, 73782, 73785, 75305, 75307, 75312, 75314, 75316, 75319, 78173, 78175, 78927, 78929, 78931, 78934, 78936, 78939, 78944, 78946, 78948, 78951, 78956, 80296
71 ....75936, 75938, 75939, 75941, 76517, 76518, 76519, 76940, 78178, 78179, 78618, 79313
73 76215
91 73171
93 ....76195, 79313
97 ....74927, 74928
101 73768
121 73171
125 73171
198 78958
400 73768
401 73768
420 73768

Proposed Rules:

23 73195
39 ....73618, 74080, 74661, 74999, 75007, 75009, 75977, 76291, 76974, 76979, 77555, 78670, 78672, 78673, 78675, 78678
71 ....74376, 74377, 74378, 75011, 75013, 76293, 76981, 76982, 76983, 76985, 76986, 79035
234 74586
259 74586
399 74586

15 CFR

6 75321
710 78170
711 78180
712 78180
716 78180
718 78180
719 78180
720 78180
730 75942
734 75942
736 75942
740 75942
742 75942
743 75942
744 73999
745 75942
747 75942
754 75942
758 75942
760 74348
764 75942
766 75942
768 75942
770 73547
772 75942
774 ....73547, 75942
902 ....74003, 76136

Proposed Rules:

301 76571
922 77557

16 CFR

1303 77492
1500 77493

17 CFR

140 79608
240 76104

Proposed Rules:

15 75888
16 75888
17 75888
18 75888
19 75888
21 75888
36 75888
40 75888
200 80313

18 CFR

Ch. I 79316
35 79610
284 ....72692, 73494, 79628
358 78183
806 78618

Proposed Rules:

35 79420
40 77560

19 CFR

351 74930

Proposed Rules:

360 75624

20 CFR

404 76940
408 76940
416 76940
422 76940
655 ....77110, 78020
656 78020
1010 78132

Proposed Rules:

404 76573
416 74663

21 CFR

101 74349
520 76946
524 79318
556 72714
558 ....72714, 75323, 76946
573 78958
1300 73549
1314 79318
1315 73549
1316 73549

Proposed Rules:

Ch. I 75625
878 78239

22 CFR

Proposed Rules:

62 ....75015, 76575

23 CFR

620 77495
635 77495
636 77495
710 77495
924 78959

24 CFR

26 76832
28 76830
180 79324
203 80297
576 75324
582 75324
583 75324

Proposed Rules:

291 78554

25 CFR

293 74004

Proposed Rules:

502 78242
514 78242
531 78242
533 78242
535 78242
537 78242
539 78242
556 78242
558 78242
571 78242
573 78242

26 CFR

1 ....75326, 75566, 75946, 78930, 78969, 79324, 79334
20 78930
25 78930
26 78930
31 ....78930, 79354
40 78930
41 78930
44 78930
53 78930
54 78930
55 78930
56 78930
156 78930
157 78930
301 ....73180, 76216, 78930, 79361
602 78930

Proposed Rules:

1 ....73197, 74380, 75979, 78252, 79421
31 ....74082, 79423
301 78254

28 CFR

26 75327
28 74932
32 76520
73 73181
75 77432

29 CFR

3 77504
5 77504
501 77110
780 77110
788 77110
1910 75568
1915 75568
1917 ....75246, 75568
1918 ....75246, 75568

1926 75568
4001 79628
4022 ....72715, 78621
4044 ....72716, 79362
4211 79628
4219 79628
Proposed Rules:
1926 73197

30 CFR

6 80580
7 80656
14 80580
18 80580
48 80580
75 ....80580, 80656
219 78622
780 75814
784 75814
816 75814
817 75814
924 74943
938 72717
948 78970

31 CFR

103 74010
380 75589
560 73788
594 78631
595 78631
597 78631

32 CFR

199 74945
706 ....72725, 73556, 73557, 75591
Proposed Rules:
185 73896
199 79726

33 CFR

110 75951
117 ....74018, 74966, 76217, 79637, 79639, 80298, 80299
147 77512
155 ....79314, 80618
156 79314
165 ....76536, 77512, 78184, 79363, 79639
323 79641
334 ....78633, 78634
Proposed Rules:
117 72752
160 76295
161 76295
164 76295
165 ....75980, 76295

34 CFR

99 74806
200 78636
300 73006
Proposed Rules:
Ch. VI 80314

36 CFR

2 74966
7 74606
212 74612
219 80299
223 79367
261 79367
1250 79392
1251 79392
1256 79392
Proposed Rules:
4 ....76987, 78680
251 79424

37 CFR

41 74972
381 72726
Proposed Rules:
201 79425
370 79727

38 CFR

21 79645
53 73558
Proposed Rules:
17 79428
21 78876

39 CFR

1 78981
2 78981
3 78981
4 78981
5 78981
6 78981
7 78981
8 78981
9 78981
10 78981
11 78981
912 75339
3020 ....77512, 78186, 78189, 79396
3060 79256
Proposed Rules:
111 79430
233 79734
261 79734
262 79734
263 79734
264 79734
265 79734
266 79734
3001 72754

40 CFR

Ch. I 75592
3 78991
19 75340
27 75340
50 76219
51 ....76539, 77882
52 ....73562, 74019, 74027, 74029, 75600, 76558, 76560, 76947, 77882, 78192, 79400, 79652, 79653, 79655, 80300
55 78196
58 77517
59 78994
60 ....78199, 78546, 78549
63 ....72727, 76220, 78199, 78637
65 78199
72 ....75954, 75959
73 ....75954, 75959
74 ....75954, 75959
77 ....75954, 75959
78 ....75954, 75959
80 74403
81 79655
112 ....74236, 75346
180 ....73580, 73586, 74972, 74978, 75601, 75605, 80301
220 74983
221 74983
222 74983
223 74983
224 74983
227 74983
228 74983
232 79641
261 ....72912, 77954
262 72912
271 ....78647, 79761
302 76948
312 78651
355 76948
1045 73789
1054 73789
1065 73789
Proposed Rules:
Ch. I 73620
52 ....74096, 74097, 74098, 75626, 78258, 79435, 79760
60 ....72962, 73629, 78260, 78522
61 73629
63 ....72756, 73629, 73631
72 75983
73 75983
74 75983
77 75983
78 75983
80 74350
81 79760
82 ....78680, 78705
158 75629
161 75629
180 ....73632, 80317
239 75986
258 75986
260 73520
261 73520
264 73520
265 73520
268 73520
270 73520
271 79761
273 73520
300 77560
312 78716
700 78261
720 78261
721 78261
723 78261
725 78261

41 CFR

102-74 77517

42 CFR

405 80302
409 80302
410 80302
411 ....79664, 80302
412 79664
413 ....79664, 80302
414 80302
415 80302
422 79664
423 80302
424 80302
440 ....73694, 77519
447 77904
455 77904
485 80302
486 80302
489 ....79664, 80302
Proposed Rules:
84 ....75027, 75045
1001 76575

43 CFR

419 74031
429 74326
423 75347
2300 74039
3800 73789

44 CFR

64 75609
65 ....76230, 76232
67 ....73182, 76234
Proposed Rules:
67 ....74666, 74673, 76318, 76322, 76324

45 CFR

88 ....78072, 78997
144 76960
301 74898
302 74898
303 74898
304 74898
Proposed Rules:
301 74408
302 74408
303 74408
305 74408
308 74408
681 79761

46 CFR

56 76247
393 79665
Proposed Rules:
71 74426
114 74426
115 74426
122 74426
170 74426
171 74426
172 74426
174 74426
175 74426
176 74426
178 74426
179 74426
185 74426

47 CFR

Ch. 1 79667
51 72732
54 72732
61 72732
64 79683
69 72732
73 ....73192, 74047, 78655, 79696, 79697, 80305
Proposed Rules:
Ch. 1 75629
1 75376
51 76325
54 76325
61 76325
69 76325
73 ....73199, 75381, 75630, 75631, 76577, 78720, 79036, 79436, 79769, 80332

48 CFR

212 76969
225 76970
252 ....76970, 76971
533 74613

552 74613
Proposed Rules:
536 73199
1804 73201
1845 73202
1852 ....73201, 73202

49 CFR

192 ....72737, 79002
209 79698
213 79698
214 79698
215 79698
216 79698
217 79698
218 79698
219 ....78656, 79698
220 79698
221 79698
222 79698
223 79698
224 79698
225 ....78657, 79698
227 79698
228 79698
229 ....74070, 79698
230 79698
231 79698
232 ....74070, 79698
233 79698
234 79698
235 79698
236 79698
238 79698
239 79698
240 79698
241 79698
244 79698
365 76472
383 73096
384 73096
385 ....76472, 76794
386 76794
387 76472
390 ....73096, 76472, 76794
391 73096
392 76794
393 76794
396 76794
1520 77531
1580 77531
Proposed Rules:
89 74098
213 73078
240 80349
390 73129
391 73129
571 ....72758, 76326
573 74101
575 72758
579 ....72758, 74101

50 CFR

14 74615
17 ....73794, 74357, 75356, 76249
27 74966
229 ....73032, 75611, 75613, 76269, 77531
300 72737
402 76272
404 73592
600 ....75968, 79705
622 73192
635 ....76972, 79005
648 ....74373, 74631, 77534, 78659, 79719, 79720, 80306
660 ....72739, 72740, 75975, 79008
665 ....75615, 75622
679 ....74987, 76136, 77534, 80307
680 76136
Proposed Rules:
17 ....73211, 74123, 74427, 74434, 74674, 74675, 75176, 76454, 76990, 77264, 77568, 79226, 79770
20 76577
21 ....74445, 74447
92 76994
216 ....75631, 75988, 77577
218 76578
226 74681
300 78276
622 ....73219, 79037
635 75382
660 ....77589, 80516
665 75057
679 ....73222, 75059, 75659, 76605, 79773
680 ....74129, 75661

Effective January 1, 2009, the Reminders, including Rules Going Into Effect and Comments Due Next Week, will no longer appear in the Reader Aids section of the Federal Register. This information can be found online at http://www.regulations.gov.

REMINDERS

The items in this list were editorially compiled as an aid to Federal Register users. Inclusion or exclusion from this list has no legal significance.

RULES GOING INTO EFFECT DECEMBER 31, 2008

AGRICULTURE DEPARTMENT

Federal Crop Insurance Corporation

Common Crop Insurance Regulations, Coverage Enhancement Option Provisions; Corrections; published 12-31-08

AGRICULTURE DEPARTMENT

Forest Service

National Forest System Land Management Planning; Correction; published 12-31-08

COMMERCE DEPARTMENT

National Oceanic and Atmospheric Administration

Pacific Halibut Fisheries:

Subsistence Fishing; published 12-1-08

EDUCATION DEPARTMENT

Assistance to States for the Education of Children with Disabilities and Preschool Grants for Children with Disabilities; published 12-1-08

ENERGY DEPARTMENT

Federal Energy Regulatory Commission

Promotion of a More Efficient Capacity Release Market; published 12-1-08

Promotion of a More Efficient Capacity Release Market; Correction; published 12-30-08

FEDERAL COMMUNICATIONS COMMISSION

Telecommunications Relay Services, Speech-to-Speech Services, E911 Requirements for IP-Enabled Service Providers; published 12-30-08

FEDERAL DEPOSIT INSURANCE CORPORATION

Rules of Practice and Procedure; published 12-2-08

FEDERAL ELECTION COMMISSION

Extension of Administrative Fines Program; published 12-1-08

HEALTH AND HUMAN SERVICES DEPARTMENT

Food and Drug Administration

Administrative rulings and decisions:

Ozone-depleting substances use; essential-use designations—

Albuterol used in oral pressurized metered-dose inhalers; removed; published 4-4-05

HOMELAND SECURITY DEPARTMENT

Coast Guard

Drawbridge Operation Regulations:

Atlantic Intracoastal Waterway (AIWW), Elizabeth River, Southern Branch, VA, Maintenance; published 11-10-08

Safety Zone:

Flagler Museum New Year's Eve Celebration Fireworks Display, West Palm Beach, FL; published 12-30-08

Safety Zones:

Bayfront Park New Year's Eve Celebration, Biscayne Bay, FL; published 11-26-08

LABOR DEPARTMENT

Labor-Management Standards Office

Labor Organization Annual Financial Reports For Trusts In Which A Labor Organization Is Interested; published 10-2-08

LABOR DEPARTMENT

Mine Safety and Health Administration

Flame-Resistant Conveyor Belt, Fire Prevention and Detection, and Use of Air from the Belt Entry; published 12-31-08

LEGAL SERVICES CORPORATION

Procedures for Disclosure of Information under the Freedom of Information Act; published 11-17-08

NATIONAL CREDIT UNION ADMINISTRATION

Prompt Corrective Action; Amended Definition of Post-Merger Net Worth; published 12-1-08

COMMENTS DUE NEXT WEEK

AGRICULTURE DEPARTMENT

Agricultural Marketing Service

Tart Cherries Grown in the States of Michigan, et al.; Final Free and Restricted Percentages for the 2008-2009 Crop Year for Tart Cherries; comments due by 1-5-09; published 12-5-08 [FR E8-28769]

AGRICULTURE DEPARTMENT

Animal and Plant Health Inspection Service

Importation of Longan from Taiwan; comments due by 1-6-09; published 11-7-08 [FR E8-26612]

AGRICULTURE DEPARTMENT

Rural Housing Service

Income Limit Modification; comments due by 1-5-09; published 11-4-08 [FR E8-25849]

COMMERCE DEPARTMENT

International Trade Administration

Withdrawal of the Regulatory Provisions Governing Targeted Dumping in Antidumping Duty Investigations; comments due by 1-9-09; published 12-10-08 [FR E8-29225]

COMMERCE DEPARTMENT

National Oceanic and Atmospheric Administration

Fisheries of the Exclusive Economic Zone Off Alaska:

Bering Sea and Aleutian Islands; Proposed 2009 and 2010 Harvest Specifications for Groundfish; comments due by 1-9-09; published 12-10-08 [FR E8-29216]

Marine Mammals; Application:

Associated Scientists at Woods Hole; comments due by 1-9-09; published 12-10-08 [FR E8-29204]

Taking and Importing Marine Mammals:

Taking Marine Mammals Incidental to Space Vehicle and Test Flight Activities from Vandenberg Air Force Base, CA; comments due by 1-5-09; published 12-19-08 [FR E8-30237]

COMMODITY FUTURES TRADING COMMISSION

Execution of Transactions: Regulation 1.38 and Guidance on Core Principle 9; Extension of Comment Period; comments due by 1-5-09; published 11-14-08 [FR E8-27121]

ENERGY DEPARTMENT

Revision of Department of Energy's Freedom of Information Act Regulations; comments due by 1-8-09; published 12-9-08 [FR E8-28940]

ENERGY DEPARTMENT

Federal Energy Regulatory Commission

Frequency Response and Bias and Voltage and Reactive Control Reliability Standards:

Electric Reliability Organization Interpretations of Specific Requirements; comments due by 1-7-09; published 12-19-08 [FR E8-30235]

ENVIRONMENTAL PROTECTION AGENCY

Agency Information Collection Activities; Proposals, Submissions, and Approvals; comments due by 1-8-09; published 12-9-08 [FR E8-29111]

Agency Information Collection Activities; Proposals, Submissions, and Approvals:

NESHAP for Primary Lead Smelters; comments due by 1-9-09; published 12-10-08 [FR E8-29229]

NESHAP for Steel Pickling, HCl Process Facilities and Hydrochloric Acid Regeneration Plants (Renewal); comments due by 1-9-09; published 12-10-08 [FR E8-29230]

Schools Chemical Cleanout Campaign; comments due by 1-9-09; published 12-10-08 [FR E8-29234]

Approval and Promulgation of Air Quality Implementation Plans:

Connecticut; Enhanced Vehicle Inspection and Maintenance Program; comments due by 1-5-09; published 12-5-08 [FR E8-28735]

Data Requirements for Antimicrobial Pesticides; comments due by 1-6-09; published 10-8-08 [FR E8-23127]

Environmental Statements; Notice of Intent:

Coastal Nonpoint Pollution Control Programs; States and Territories—

Florida and South Carolina; Open for

comments until further notice; published 2-11-08 [FR 08-00596]
National Emission Standards for Hazardous Air Pollutants for Chemical Manufacturing Area Sources; comments due by 1-5-09; published 11-20-08 [FR E8-27609]
Regulation of Fuel and Fuel Additives:
Gasoline and Diesel Fuel Test Methods; comments due by 1-7-09; published 12-8-08 [FR E8-28370]
Revisions to the California State Implementation Plan:
Great Basin Unified Air Pollution Control District and Kern County Air Pollution Control District; comments due by 1-5-09; published 12-5-08 [FR E8-28732]
South Coast Air Quality Management District; comments due by 1-5-09; published 12-5-08 [FR E8-28725]

FEDERAL COMMUNICATIONS COMMISSION
Agency Information Collection Activities; Proposals, Submissions, and Approvals; comments due by 1-5-09; published 12-4-08 [FR E8-28755]
Television Broadcasting Services:
Clovis, NM; comments due by 1-8-09; published 12-24-08 [FR E8-30693]

HOMELAND SECURITY DEPARTMENT
Federal Emergency Management Agency
Proposed Flood Elevation Determinations; comments due by 1-8-09; published 10-10-08 [FR E8-24089]

HOMELAND SECURITY DEPARTMENT
Privacy Act of 1974: Implementation of Exemptions; comments due by 1-8-09; published 12-9-08 [FR E8-29060]

HOUSING AND URBAN DEVELOPMENT DEPARTMENT
Public Housing Evaluation and Oversight:
Changes to the Public Housing Assessment System and Determining and Remedying Substantial Default; comments due by 1-8-09; published 11-24-08 [FR E8-27807]

INTERIOR DEPARTMENT
Fish and Wildlife Service
Endangered and Threatened Wildlife and Plants:
Revised Designation of Critical Habitat for the Wintering Population of the Piping Plover (Charadrius melodus) in Texas; comments due by 1-8-09; published 12-9-08 [FR E8-28752]
Receipt of Applications for Permit; comments due by 1-9-09; published 12-10-08 [FR E8-29196]

INTERIOR DEPARTMENT
National Park Service
National Register of Historic Places; Notification of Pending Nominations and Related Actions; comments due by 1-6-09; published 12-22-08 [FR E8-30323]

LIBRARY OF CONGRESS
Copyright Office, Library of Congress
Compulsory License for Making and Distributing Phonorecords, Including Digital Phonorecord Deliveries; comments due by 1-6-09; published 11-7-08 [FR E8-26666]

NUCLEAR REGULATORY COMMISSION
Model Safety Evaluation on Technical Specification Improvement to Relocate Surveillance Frequencies:
Licensee Control - Risk-Informed Technical Specification Task Force (RITSTF) Initiative 5b, Technical Specification Task Force - 425, Revision 2; comments due by 1-5-09; published 12-5-08 [FR E8-28850]
Physical Protection of Byproduct Material; comments due by 1-5-09; published 11-19-08 [FR E8-27464]

PERSONNEL MANAGEMENT OFFICE
Noncompetitive Appointment of Certain Military Spouses; comments due by 1-5-09; published 12-5-08 [FR E8-28747]
Prevailing Rate Systems:
Redefinition of the Little Rock, AR, Southern Missouri, and Tulsa, OK, Appropriated Fund Federal Wage System Wage Areas; comments due by 1-7-09; published 12-8-08 [FR E8-28916]

SOCIAL SECURITY ADMINISTRATION
Setting the Time and Place for a Hearing before an Administrative Law Judge; comments due by 1-9-09; published 11-10-08 [FR E8-26681]

TRANSPORTATION DEPARTMENT
Federal Aviation Administration
Airworthiness Directives:
Boeing Model 707 Airplanes and Model 720 and 720B Series Airplanes; comments due by 1-5-09; published 12-10-08 [FR E8-29257]
Boeing Model 737 Airplanes; comments due by 1-9-09; published 11-10-08 [FR E8-26373]
Bombardier Model CL 600 2B19 (Regional Jet Series 100 & 440) Airplanes; comments due by 1-5-09; published 12-4-08 [FR E8-28365]
Turbomeca S.A. Arriel 2B, 2B1, and 2B1A Turboshaft Engines; comments due by 1-8-09; published 12-9-08 [FR E8-29102]
Proposed Establishment of Class D Airspace:
Branson, MO; comments due by 1-5-09; published 11-20-08 [FR E8-27544]
Proposed Establishment of Class E Airspace; Tower, MN; comments due by 1-9-09; published 11-25-08 [FR E8-28034]
Special Conditions:
Airbus A318, A319, A320 and A321 Series Airplanes; Inflatable Restraints; comments due by 1-5-09; published 11-20-08 [FR E8-27541]
Dassault Falcon 2000 Series Airplanes; Aircell Airborne Satcom Equipment Consisting of a Wireless Handset and Associated Base Station, etc.; comments due by 1-5-09; published 11-20-08 [FR E8-27538]

TRANSPORTATION DEPARTMENT
National Highway Traffic Safety Administration
Receipt of Petition for Decision:
Nonconforming 2005-2006 Porsche Carrera Cabriolet Passenger Cars Manufactured Prior to September 1, 2006 are Eligible for Importation; comments due by 1-9-09; published 12-10-08 [FR E8-29190]

TREASURY DEPARTMENT
Internal Revenue Service
Further Guidance on the Application of Section 409A to Nonqualified Deferred Compensation Plans; Public Hearing; comments due by 1-7-09; published 12-8-08 [FR E8-28894]
Notices to Participants of Consequences of Failing to Defer Receipt of Qualified Retirement Plan Distributions; Expansion of Applicable Election Period and Period for Notices; comments due by 1-7-09; published 10-9-08 [FR E8-23918]

VETERANS AFFAIRS DEPARTMENT
Privacy Act; Systems of Records; comments due by 1-7-09; published 12-8-08 [FR E8-29016]

LIST OF PUBLIC LAWS

This is a continuing list of public bills from the current session of Congress which have become Federal laws. It may be used in conjunction with "P L U S" (Public Laws Update Service) on 202–741–6043. This list is also available online at *http://www.archives.gov/federal-register/laws.html*.

The text of laws is not published in the **Federal Register** but may be ordered in "slip law" (individual pamphlet) form from the Superintendent of Documents, U.S. Government Printing Office, Washington, DC 20402 (phone, 202–512–1808). The text will also be made available on the Internet from GPO Access at *http://www.gpoaccess.gov/plaws/index.html*. Some laws may not yet be available.

H.R. 6184/P.L. 110–456
America's Beautiful National Parks Quarter Dollar Coin Act of 2008 (Dec. 23, 2008; 122 Stat. 5038)

H.R. 7311/P.L. 110–457
William Wilberforce Trafficking Victims Protection Reauthorization Act of 2008 (Dec. 23, 2008; 122 Stat. 5044)

H.R. 7327/P.L. 110–458
Worker, Retiree, and Employer Recovery Act of 2008 (Dec. 23, 2008; 122 Stat. 5092)

S. 3663/P.L. 110–459
Short-term Analog Flash and Emergency Readiness Act (Dec. 23, 2008; 122 Stat. 5121)

S. 3712/P.L. 110–460
To make a technical correction in the Paul

Wellstone and Pete Domenici Mental Health Parity and Addiction Equity Act of 2008. (Dec. 23, 2008; 122 Stat. 5123)

Last List December 23, 2008

Public Laws Electronic Notification Service (PENS)

PENS is a free electronic mail notification service of newly enacted public laws. To subscribe, go to *http://listserv.gsa.gov/archives/publaws-l.html*

Note: This service is strictly for E-mail notification of new laws. The text of laws is not available through this service. **PENS** cannot respond to specific inquiries sent to this address.